RAM

2019

RAM2500/3500

OWNER'S MANUAL

VEHICLES SOLD IN CANADA

With respect to any Vehicles Sold in Canada, the name FCA US LLC shall be deemed to be deleted and the name FCA Canada Inc. used in substitution therefore.

DRIVING AND ALCOHOL

Drunken driving is one of the most frequent causes of accidents.

Your driving ability can be seriously impaired with blood alcohol levels far below the legal minimum. If you are drinking, don't drive. Ride with a designated non-drinking driver, call a cab, a friend, or use public transportation.

WARNING!
Driving after drinking can lead to an accident. Your perceptions are less sharp, your reflexes are slower, and your judgment is impaired when you have been drinking. Never drink and then drive.

This manual illustrates and describes the operation of features and equipment that are either standard or optional on this vehicle. This manual may also include a description of features and equipment that are no longer available or were not ordered on this vehicle. Please disregard any features and equipment described in this manual that are not on this vehicle.

FCA US LLC reserves the right to make changes in design and specifications, and/or make additions to or improvements to its products without imposing any obligation upon itself to install them on products previously manufactured.

Copyright © 2019 FCA US LLC

TABLE OF CONTENTS

1 INTRODUCTION 13

2 GETTING TO KNOW YOUR VEHICLE 16

3 GETTING TO KNOW YOUR INSTRUMENT PANEL 160

4 SAFETY 195

5 STARTING AND OPERATING 290

6 IN CASE OF EMERGENCY 440

7 SERVICING AND MAINTENANCE 499

8 TECHNICAL SPECIFICATIONS 564

9 MULTIMEDIA 575

10 CUSTOMER ASSISTANCE 673

11 INDEX 678

INTRODUCTION

- INTRODUCTION 13
- HOW TO USE THIS MANUAL 14
  - Essential Information 14
  - Symbols 14
- WARNINGS AND CAUTIONS 15
- VAN CONVERSIONS/CAMPERS 15
- VEHICLE MODIFICATIONS/ALTERATIONS 15

GETTING TO KNOW YOUR VEHICLE

- VEHICLE USER GUIDE — IF EQUIPPED 16
- KEYS 18
  - Key Fob 18
- IGNITION SWITCH 25
  - Keyless Push Button Ignition 25
- REMOTE START — IF EQUIPPED 27
  - How To Use Remote Start 27
  - Remote Start Abort Message 28
  - To Enter Remote Start Mode 28
  - To Exit Remote Start Mode Without Driving The Vehicle 29
  - To Exit Remote Start Mode And Drive The Vehicle 29
  - Remote Start Comfort Systems — If Equipped 29
  - General Information 29
- SENTRY KEY 30
  - Key Programming 30
  - Replacement Keys 31
  - General Information 31
- VEHICLE SECURITY ALARM 32
  - To Arm The System 32
  - To Disarm The System 32
  - Rearming Of The System 33
  - Security System Manual Override 33
- DOORS 33
  - Manual Door Locks 33
  - Power Door Locks — If Equipped 35
  - Power Side Steps — If Equipped 35
  - Keyless Enter-N-Go — Passive Entry 36
  - Automatic Door Locks — If Equipped 39
  - Child-Protection Door Lock 39
- SEATS 40
  - Manual Front Seat Adjustment 41
  - Manual Rear Seat Adjustment 42
  - Power Driver Seat Adjustment — If Equipped 43
  - Driver Memory Seats — If Equipped 45
  - Heated Seats — If Equipped 49
  - Ventilated Seats — If Equipped 50

- HEAD RESTRAINTS 51
  - Front Head Restraints 52
  - Rear Head Restraint Adjustment 53
  - Rear Head Restraint Removal 54
- STEERING WHEEL 54
  - Tilt Steering Column 54
  - Heated Steering Wheel — If Equipped 55
- DRIVER ADJUSTABLE PEDALS — IF EQUIPPED 56
- MIRRORS 57
  - Inside Day/Night Mirror — If Equipped 57
  - Automatic Dimming Mirror — If Equipped 58
  - Automatic Dimming Mirror With Rear View Camera Display — If Equipped 59
  - Outside Mirrors 59
  - Driver's Outside Automatic Dimming Mirror — If Equipped 60
  - Power Mirrors — If Equipped 60
  - Power Convex Mirror Switch — If Equipped 61
  - Trailer Towing Mirrors — If Equipped 62
  - Heated Mirrors — If Equipped 63
  - Tilt Side Mirrors In Reverse — If Equipped 63
  - Power Folding Outside Mirrors For Standard And Trailer Tow — If Equipped 64
  - Illuminated Vanity Mirror — If Equipped 66
- EXTERIOR LIGHTS 67
  - Multifunction Lever 67
  - Headlight Switch 67
  - Daytime Running Lights (DRL) — If Equipped 68
  - High/Low Beam Switch 68
  - Automatic High Beam Headlamp Control — If Equipped 68
  - Flash-To-Pass 69
  - Automatic Headlights — If Equipped 69
  - Parking Lights And Panel Lights 70
  - Headlights On With Wipers (Available With Automatic Headlights Only) 70
  - Headlight Delay 70
  - Lights-On Reminder 70
  - Front Fog Lights — If Equipped 71
  - Turn Signals 71
  - Lane Change Assist — If Equipped 71
  - Cargo Light With Bed Lights — If Equipped 72
  - Battery Saver 73
- INTERIOR LIGHTS 73
  - Courtesy Lights 73
  - Illuminated Entry 76
- WINDSHIELD WIPERS AND WASHERS 76
  - Windshield Wipers 76
  - Rain Sensing Wipers — If Equipped 78

- CLIMATE CONTROLS 79
  - Climate Controls Without A Touchscreen Overview 79
  - Climate Controls With A Touchscreen Overview 83
  - Climate Control Functions 90
  - Automatic Temperature Control (ATC) 91
  - Operating Tips 91
- WINDOWS 94
  - Power Windows 94
  - Wind Buffeting 97
- POWER SUNROOF — IF EQUIPPED 97
  - Single Pane Power Sunroof — If Equipped 97
- HOOD 101
  - To Open The Hood 101
  - To Close The Hood 102
- TAILGATE 102
  - Opening 102
  - Closing 103
  - Bed Step — If Equipped 103
- GARAGE DOOR OPENER — IF EQUIPPED 104
  - Before You Begin Programming HomeLink 105
  - Canadian/Gate Operator Programming 108
  - Using HomeLink 110
  - Security 110
  - Troubleshooting Tips 110
  - General Information 110
- INTERNAL EQUIPMENT 111
  - Storage 111
  - Cupholders 122
  - Electrical Power Outlets 124
  - Power Inverter — If Equipped 126
  - Wireless Charging Pad — If Equipped 129
  - Overhead Sunglass Storage 130
- PICKUP BOX 130
  - Cargo Camera — If Equipped 132
- RAMBOX — IF EQUIPPED 134
  - RamBox Integrated Box Side Storage Bins 134
  - RamBox Safety Warning 137
  - Bed Divider — If Equipped 138
  - Bed Rail Tie-Down System 142
- SLIDE-IN CAMPERS 144
  - Camper Applications 144
- EASY-OFF TAILGATE 144
  - Disconnecting The Rear Camera And Remote Keyless Entry 144
  - Removing The Tailgate 146
  - Locking Tailgate 146
- TRI-FOLD TONNEAU COVER — IF EQUIPPED 147
  - Tri-Fold Tonneau Cover Removal 147
  - Tri-Fold Tonneau Cover Installation 153
  - Tri-Fold Tonneau Cover Cleaning 159

GETTING TO KNOW YOUR INSTRUMENT PANEL

- BASE / MIDLINE INSTRUMENT CLUSTER 160
  - Base / Midline Instrument Cluster Descriptions....161
- PREMIUM INSTRUMENT CLUSTER 163
  - Premium Instrument Cluster Descriptions 164
- INSTRUMENT CLUSTER DISPLAY 165
  - Instrument Cluster Display Controls 165
  - Oil Life Reset 167
  - Display Menu Items 169
  - Battery Saver On/Battery Saver Mode Message — Electrical Load Reduction Actions — If Equipped 177
- WARNING LIGHTS AND MESSAGES 179
  - Red Warning Lights 179
  - Yellow Warning Lights.....184
  - Yellow Indicator Lights 188
  - Green Indicator Lights.....190
  - White Indicator Lights.....191
  - Blue Indicator Lights.....192
- ONBOARD DIAGNOSTIC SYSTEM — OBD II 192
  - Onboard Diagnostic System (OBD II) Cybersecurity 193
- EMISSIONS INSPECTION AND MAINTENANCE PROGRAMS 193

SAFETY

- SAFETY FEATURES 195
  - Anti-Lock Brake System (ABS) 195
  - Electronic Brake Control System 196
- AUXILIARY DRIVING SYSTEMS.....208
  - Blind Spot Monitoring (BSM) — If Equipped 208
  - Forward Collision Warning (FCW) With Mitigation — If Equipped 216
  - Tire Pressure Monitoring System (TPMS) 220
- OCCUPANT RESTRAINT SYSTEMS 230
  - Occupant Restraint Systems Features 230
  - Important Safety Precautions.....230
  - Seat Belt Systems 231
  - Supplemental Restraint Systems (SRS).....245
  - Child Restraints 258
  - Transporting Pets 286
- SAFETY TIPS 286
  - Transporting Passengers 286
  - Exhaust Gas 286
  - Safety Checks You Should Make Inside The Vehicle 287
  - Periodic Safety Checks You Should Make Outside The Vehicle 289

STARTING AND OPERATING

- STARTING THE ENGINE 290
  - Automatic Transmission 291
  - Tip Start Feature 291
  - Keyless Enter-N-Go — Ignition 291
  - Normal Starting Using ENGINE START/STOP Button 292
  - Cold Weather Operation (Below –22°F Or –30°C) 296
  - After Starting 296
- ENGINE BLOCK HEATER — IF EQUIPPED 297
- ENGINE BREAK-IN RECOMMENDATIONS 297
- PARKING BRAKE 298
- AUTOMATIC TRANSMISSION 299
  - Ignition Park Interlock 301
  - Brake/Transmission Shift Interlock System 301
  - Eight-Speed Automatic Transmission 301
- ACTIVE NOISE CANCELLATION 308
- FOUR-WHEEL DRIVE OPERATION — IF EQUIPPED 309
  - Four-Position Electronically Shifted Transfer Case — If Equipped 309
  - Manually Shifted Transfer Case — If Equipped 314
- AIR SUSPENSION SYSTEM (2500/3500 MODELS) — IF EQUIPPED 317
  - Description 317
  - Air Suspension Modes 318
  - Instrument Cluster Display Messages 320
  - Operation 320
- AXLE LOCKER SYSTEM — POWER WAGON MODELS ONLY (IF EQUIPPED) 320
- STABILIZER/SWAY BAR SYSTEM — POWER WAGON ONLY 322
- SAFE OFF-ROAD DRIVING — POWER WAGON ONLY 324
  - Off-Road Driving Tips And Vehicle Characteristics 324
  - Driving In Snow, Mud And Sand 326
  - Crossing Obstacles (Rocks And Other High Points) 327
  - Hill Climbing 329
  - Driving Through Water 331
  - Airing Down For Off-Road Driving 332
  - Vehicle Recovery 333
  - After Driving Off-Road 336
- LIMITED-SLIP DIFFERENTIAL 337

- WINCH USAGE — POWER WAGON ONLY (IF EQUIPPED) 337
  - Things To Know Before Using Your Winch 337
  - Understanding The Features Of Your Winch 339
  - Winch Accessories 341
  - Operating Your Winch 341
  - Rigging Techniques 352
- FUEL SAVER TECHNOLOGY — IF EQUIPPED 354
- SPEED CONTROL 354
  - To Activate 355
  - To Set A Desired Speed 355
  - To Vary The Speed Setting 355
  - To Accelerate For Passing 356
  - To Resume Speed 357
  - To Deactivate 357
- ADAPTIVE CRUISE CONTROL (ACC) — IF EQUIPPED 357
  - Adaptive Cruise Control (ACC) Operation 359
  - Activating Adaptive Cruise Control (ACC) 360
  - To Activate/Deactivate 360
  - To Set A Desired ACC Speed 361
  - To Cancel 362
  - To Turn Off 362
  - To Resume 362
  - To Vary The Speed Setting 363
  - Setting The Following Distance In ACC 364
  - Overtake Aid 367
  - ACC Operation At Stop 367
  - Adaptive Cruise Control (ACC) Menu 368
  - Display Warnings And Maintenance 369
  - Precautions While Driving With ACC 371
  - General Information 375
  - Normal (Fixed Speed) Cruise Control Mode 376
- PARKSENSE REAR PARK ASSIST — IF EQUIPPED 379
  - ParkSense Sensors 379
  - ParkSense Warning Display 380
  - ParkSense Display 380
  - Enabling And Disabling ParkSense 385
  - Service The ParkSense Rear Park Assist System 385
  - Cleaning The ParkSense System 386
  - ParkSense System Usage Precautions 386

- PARKSENSE FRONT AND REAR PARK ASSIST 387
  - ParkSense Sensors 388
  - ParkSense Warning Display 388
  - ParkSense Display 389
  - Enabling And Disabling Front And/Or Rear ParkSense 394
  - Service The ParkSense Front/Rear Park Assist System 394
  - Cleaning The ParkSense System 395
  - ParkSense System Usage Precautions 395
- PARKVIEW REAR BACK UP CAMERA 397
- SURROUND VIEW CAMERA SYSTEM — IF EQUIPPED 401
- REFUELING THE VEHICLE — GAS ENGINE 408
  - Loose Fuel Filler Cap Message 410
- VEHICLE LOADING 410
  - Gross Vehicle Weight Rating (GVWR) 410
  - Payload 410
  - Gross Axle Weight Rating (GAWR) 410
  - Tire Size 410
  - Rim Size 410
  - Inflation Pressure 410
  - Curb Weight 411
  - Loading 411
- TRAILER TOWING 411
  - Common Towing Definitions 412
  - Trailer Hitch Type and Maximum Trailer Weight 417
  - Trailer Towing Weights (Maximum Trailer Weight Ratings) 418
  - Trailer And Tongue Weight 418
  - Towing Requirements 418
  - Towing Tips 426
- SNOWPLOW 427
  - 2500/3500 Models Only 427
- RECREATIONAL TOWING (BEHIND MOTORHOME, ETC.) 430
  - Towing This Vehicle Behind Another Vehicle 430
  - Recreational Towing — Two-Wheel Drive Models 431
  - Recreational Towing — Four-Wheel Drive Models 432
- DRIVING TIPS 436
  - Driving On Slippery Surfaces 436
  - Driving Through Water 437
  - Off-Road Driving Tips 438

IN CASE OF EMERGENCY

- HAZARD WARNING FLASHERS 440
- ASSIST AND SOS SYSTEM — IF EQUIPPED 441
- BULB REPLACEMENT 446
  - Replacement Bulbs 446
  - Replacing Exterior Bulbs 447
- FUSES 457
  - Power Distribution Center 458
- JACKING AND TIRE CHANGING 469
  - Jack Location 470
  - Removal Of Jack And Tools 470
  - Removing The Spare Tire 473
  - Preparations For Jacking 476
  - Jacking Instructions 477
  - To Stow The Flat Or Spare 483
  - Reinstalling The Jack And Tools 485
  - Hub Caps/Wheel Covers — If Equipped 487
- JUMP STARTING 488
  - Preparations For Jump Start 489
  - Jump Starting Procedure 490
- MANUAL PARK RELEASE — 8–SPEED TRANSMISSION 492
- IF YOUR ENGINE OVERHEATS 493
- FREEING A STUCK VEHICLE 494
- TOWING A DISABLED VEHICLE 495
  - Two-Wheel Drive Models 497
  - Four-Wheel Drive Models 497
  - Emergency Tow Hooks — If Equipped 498
- ENHANCED ACCIDENT RESPONSE SYSTEM (EARS) 498
- EVENT DATA RECORDER (EDR) 498

SERVICING AND MAINTENANCE

- SCHEDULED SERVICING 499
  - Maintenance Plan 500
  - Heavy Duty Use Of The Vehicle 503
- ENGINE COMPARTMENT 504
  - 6.4L Engine 504
  - Checking Oil Level — Gas Engine 505
  - Adding Washer Fluid 505
  - Maintenance-Free Battery 506

- DEALER SERVICE 506
  - Engine Oil — Gas Engine 507
  - Engine Oil Filter 509
  - Engine Air Cleaner Filter 509
  - Air Conditioner Maintenance 511
  - Accessory Drive Belt Inspection....516
  - Body Lubrication 517
  - Windshield Wiper Blades 517
  - Exhaust System 520
  - Cooling System 522
  - Brake System 527
  - Automatic Transmission 528
  - Rear Axle And 4x4 Front Driving Axle Fluid Level 529
  - Transfer Case 530
- HOISTING 531
- TIRES 531
  - Tire Safety Information 531
  - Tires — General Information 541
  - Tire Types 547
  - Spare Tires — If Equipped 548
  - Wheel And Wheel Trim Care 551
  - Tire Chains (Traction Devices) 552
  - Tire Rotation Recommendations 553
- DEPARTMENT OF TRANSPORTATION UNIFORM TIRE QUALITY GRADES 555
  - Treadwear....556
  - Traction Grades....556
  - Temperature Grades 556
- STORING THE VEHICLE 557
- BODYWORK....557
  - Protection From Atmospheric Agents 557
  - Body And Underbody Maintenance....558
  - Preserving The Bodywork....558
- INTERIORS 561
  - Seats And Fabric Parts 561
  - Plastic And Coated Parts 562
  - Leather Parts....563
  - Glass Surfaces 563

TECHNICAL SPECIFICATIONS

- IDENTIFICATION DATA 564
  - Vehicle Identification Number 564
- BRAKE SYSTEM 565
  - Hydraulic Brake Assist — 2500/3500 Models Only (Except Power Wagon) 565
- WHEEL AND TIRE TORQUE SPECIFICATIONS 565
  - Torque Specifications 565
- FUEL REQUIREMENTS 567
  - 6.4L Engine 567
  - Reformulated Gasoline 568
  - Materials Added To Fuel 568
  - Gasoline/Oxygenate Blends 568
  - Do Not Use E-85 In Non-Flex Fuel Vehicles 569
  - CNG And LP Fuel System Modifications 569
  - MMT In Gasoline 569
  - Fuel System Cautions 570
  - Carbon Monoxide Warnings 570
- FLUID CAPACITIES 571
- FLUIDS AND LUBRICANTS 572
  - Engine 572
  - Chassis 574

MULTIMEDIA

- UCONNECT SYSTEMS 575
- DRAG & DROP MENU BAR 575
- CYBERSECURITY 576
- UCONNECT SETTINGS 578
  - Uconnect 3 Settings 578
  - Uconnect 4/4C/4C NAV Settings 597
  - Uconnect 4C NAV With 12–inch Display Settings 621
- STEERING WHEEL AUDIO CONTROLS — IF EQUIPPED 642
  - Radio Operation 642
  - Media Mode 642
- IPOD/USB/MP3 CONTROL — IF EQUIPPED 643
- RADIO OPERATION AND MOBILE PHONES 647
  - Regulatory And Safety Information 648

- VOICE COMMANDS 649
  - Introducing Uconnect 649
  - Get Started 649
  - Basic Voice Commands 650
  - Radio 652
  - Media 654
  - Phone 656
  - Voice Text Reply — If Equipped 658
  - Climate (4C/4C NAV) 660
  - Navigation (4C NAV) 661
  - SiriusXM Guardian (4C/4C NAV) — If Equipped 663
  - Register (4C/4C NAV) 664
  - Mobile App (4C/4C NAV) 664
  - SiriusXM Travel Link (4C NAV) 665
  - Siri Eyes Free — If Equipped 666
  - Using Do Not Disturb 668
  - Android Auto — If Equipped 668
  - Apple CarPlay — If Equipped 670
  - General Information 671
  - Additional Information 672
- CD/DVD DISC MAINTENANCE 672

CUSTOMER ASSISTANCE

- SUGGESTIONS FOR OBTAINING SERVICE FOR YOUR VEHICLE 673
  - Prepare For The Appointment 673
  - Prepare A List 673
  - Be Reasonable With Requests 673
- IF YOU NEED ASSISTANCE 673
  - FCA US LLC Customer Center 674
  - FCA Canada Inc. Customer Center 674
  - In Mexico Contact 674
  - Puerto Rico And U.S. Virgin Islands 674
  - Customer Assistance For The Hearing Or Speech Impaired (TDD/TTY) 675
  - Service Contract 675
- WARRANTY INFORMATION 676
- MOPAR PARTS 676
- REPORTING SAFETY DEFECTS 676
  - In The 50 United States And Washington, D.C. 676
  - In Canada 677
- PUBLICATION ORDER FORMS 677

INTRODUCTION

INTRODUCTION

Dear Customer, congratulations on selecting your new vehicle. Be assured that it represents precision workmanship, distinctive styling, and high quality.

This is a specialized utility vehicle. It can go places and perform tasks that are not intended for conventional passenger vehicles. It handles and maneuvers differently from many passenger vehicles both on-road and off-road, so take time to become familiar with your vehicle. If equipped, the two-wheel drive version of this vehicle was designed for on-road use only. It is not intended for off-road driving or use in other severe conditions suited for a four-wheel drive vehicle. Before you start to drive this vehicle, read the Owner's Manual. Be sure you are familiar with all vehicle controls, particularly those used for braking, steering, transmission, and transfer case shifting. Learn how your vehicle handles on different road surfaces. Your driving skills will improve with experience. When driving off-road, or working the vehicle, don't overload the vehicle or expect the vehicle to overcome the natural laws of physics. Always observe federal, state, provincial and local laws wherever you drive. As with other vehicles of this type, failure to operate this vehicle correctly may result in loss of control or a collision. Refer to the "Driving Tips" in "Starting and Operating" for further information.

This Owner's Manual has been prepared with the assistance of service and engineering specialists to acquaint you with the operation and maintenance of your vehicle. It is supplemented by Warranty Information, and customer oriented documents. In the attached Warranty Booklet you will find a description of the services that FCA offers to its customers, the Warranty Certificate and the details of the terms and conditions for maintaining its validity. Please take the time to read all of these publications carefully before driving your vehicle for the first time. Following the instructions, recommendations, tips, and important warnings in this manual will help assure safe and enjoyable operation of your vehicle.

This Owner's Manual describes all versions of this vehicle. Options and equipment dedicated to specific markets or versions are not expressly indicated in the text. Therefore, you should only consider the information which is related to the trim level, engine, and version that you have purchased. Any content introduced throughout the Owner's Information, that may or may not be applicable to your vehicle, will

be identified with the wording “If Equipped”. All data contained in this publication are intended to help you use your vehicle in the best possible way. FCA aims at a constant improvement of the vehicles produced. For this reason, it reserves the right to make changes to the model described for technical and/or commercial reasons. For further information, contact an authorized dealer.

If applicable, refer to the Owner’s Manual Supplement for related information.

NOTE:
After reviewing the Owner’s Information, it should be stored in the vehicle for convenient referencing, and remain with the vehicle when sold.

When it comes to service, remember that your authorized dealer knows your vehicle best, has factory-trained technicians and genuine MOPAR® parts, and cares about your satisfaction.

HOW TO USE THIS MANUAL

Essential Information

Consult the Table of Contents to determine which section contains the information you desire.

Since the specification of your vehicle depends on the items of equipment ordered, certain descriptions and illustrations may differ from your vehicle's equipment.

The detailed index at the back of this Owner's Manual contains a complete listing of all subjects.

Symbols

Some vehicle components have colored labels whose symbols indicate precautions to be observed when using this component. Refer to “Warning Lights and Messages” in “Getting To Know Your Instrument Panel” for further information on the symbols used in your vehicle.

WARNINGS AND CAUTIONS

This Owner's Manual contains **WARNINGS** against operating procedures that could result in a collision, bodily injury and/or death. It also contains **CAUTIONS** against procedures that could result in damage to your vehicle. If you do not read this entire Owner's Manual, you may miss important information. Observe all Warnings and Cautions.

VAN CONVERSIONS/CAMPERS

The New Vehicle Limited Warranty does not apply to body modifications or special equipment installed by van conversion/camper manufacturers/body builders. U.S. residents refer to the Warranty Information book, Section 2.1.C. Canadian residents refer to the "What Is Not Covered" section of the Warranty Information book. Such equipment includes video monitors, VCRs, heaters, stoves, refrigerators, etc. For warranty coverage and service on these items, contact the applicable manufacturer.

Operating instructions for the special equipment installed by the conversion/camper manufacturer should also be supplied with your vehicle. If these instructions are missing, please contact your authorized dealer for assistance in obtaining replacement documents from the applicable manufacturer.

For information on the Body Builder's Guide refer to www.rambodybuilder.com. This website contains dimensional and technical specifications for your vehicle. It is intended for Second Stage Manufacturer's technical support. For service issues, contact your authorized dealer.

VEHICLE MODIFICATIONS/ALTERATIONS

WARNING!
Any modifications or alterations to this vehicle could seriously affect its roadworthiness and safety and may lead to a collision resulting in serious injury or death.

GETTING TO KNOW YOUR VEHICLE

VEHICLE USER GUIDE — IF EQUIPPED

Access your Owner's Information right through your Uconnect 4C or 4C NAV touchscreen system — If Equipped.

To access the Vehicle User Guide on your Uconnect Touchscreen: Press the Uconnect **Apps** button. From there, press the **Vehicle User Guide** icon on your touchscreen. No Uconnect registration is required.

Uconnect 4C NAV With 8.4–inch Display Vehicle User Guide Touchscreen Icon

NOTE:
Vehicle User Guide features are not available while the vehicle is moving. If you try to access while the vehicle is in motion, the system will display: Feature not available while the vehicle is in motion.

Pre-Installed Features

Your User Guide — Updated in real-time	Available when and where you need it
Touchscreen convenience	Customizable interface
Maintenance schedules and information	Multilingual
Comprehensive icon & symbol glossary	

Once you launch your Vehicle User Guide, you will be able to explore your warranty information and radio manual when and where you need them. Your Uconnect system displays the Vehicle User Guide on your touchscreen radio to assist in better understanding your vehicle. There's no app to download, no phone to connect and no external device needed for playback. Plus, it's updated throughout the year, in real-time, so it never goes out of date.

Features/Benefits

- Pre-installed on your Uconnect touchscreen radio
- Enhanced search and browsing capability
- Robust NAV application — If Equipped
- Add selected topics to a fast-access Favorites category
- Icon and symbol glossary
- Warranty information
- Crucial driver information and assistance:

Operating Instructions	Maintenance Schedules
Warranty Information	Emergency Procedures
Fluid Level Standards	911 Contact and More

Tip:
When viewing a topic, tap the star icon to add it to your Favorites, for easy access in the future.

KEYS

Key Fob

Your vehicle uses a keyless ignition system. The ignition system consists of a key fob with Remote Keyless Entry (RKE) and a START/STOP push button ignition system. The Remote Keyless Entry system consists of a key fob and Keyless Enter-N-Go feature.

NOTE:
The key fob may not be found if it is located next to a mobile phone, laptop or other electronic device; these devices may block the key fob's wireless signal.

The key fob allows you to lock or unlock all doors, tailgate, and the RamBox (if equipped) as well as activate the Panic Alarm from distances up to approximately 66 ft (20 m) using a handheld key fob. The key fob does not need to be pointed at the vehicle to activate the system.

NOTE:

- In the ON/RUN position, all key fob buttons will work until the vehicle reaches 3 mph (5 km/h).
- The key fob should not be placed next to the wireless charging pad (if equipped).

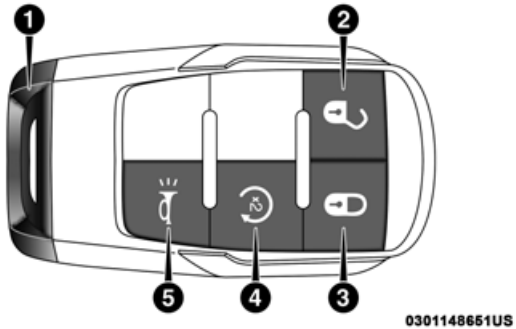

Key Fob

1 — Emergency Key
2 — Unlock
3 — Lock
4 — Remote Start
5 — PANIC

In case the ignition switch does not change with the push of a button, the key fob may have a low or fully depleted battery. A low key fob battery can be verified by referring to the instrument cluster, which will display directions to follow.

In a situation where the battery is low or fully depleted, a back up method can be used to operate the ignition switch. Put the nose side of the key fob (side opposite of the Emergency Key) against the ENGINE START/STOP button and push to operate the ignition switch.

To Unlock The Doors And Tailgate

Push and release the unlock button on the key fob once to unlock the driver's door. Push the unlock button twice within five seconds to unlock all doors, the tailgate and the RamBox (if equipped). The turn signal lights will flash to acknowledge the unlock signal. The illuminated entry system will also turn on.

NOTE:
The instrument cluster display or Uconnect Settings are setup for driver door first, otherwise this will unlock all doors.

To Lock The Doors And Tailgate

Push and release the lock button on the key fob to lock all doors, the tailgate, and the RamBox (if equipped). The turn signal lights will flash and the horn will chirp to acknowledge the signal.

Sound Horn With Remote Key Lock

This feature will cause the horn to chirp when the doors are locked with the key fob. This feature can be turned on or turned off.

NOTE:
Pushing the lock button on the key fob while you are in the vehicle will activate the vehicle security alarm system. Opening a door with the vehicle security alarm system activated will cause the alarm to sound. Push the unlock button to deactivate the vehicle security alarm system.

Refer to "Instrument Cluster Display" in "Getting To Know Your Instrument Panel" for further information.

Using The Panic Alarm

To turn the Panic Alarm feature on or off, push the Panic button on the key fob. When the Panic Alarm is activated, the turn signals will flash, the horn will pulse on and off, and the interior lights will turn on.

The Panic Alarm will stay on for three minutes unless you turn it off by either pushing the Panic button a second time or drive the vehicle at a speed of 15 mph (24 km/h) or greater.

NOTE:

- The interior lights will turn off if you place the ignition in the ACC or ON/RUN position while the Panic Alarm is activated. However, the exterior lights and horn will remain on.
- You may need to be less than 35 ft (11 m) from the vehicle when using the key fob to turn off the Panic Alarm due to the radio frequency noises emitted by the system.

Air Suspension (Remote Lowering Of The Vehicle) — If Equipped

For easy entry and loading, your vehicle can be lowered by pushing the key fob air suspension lowering button two times. When key fob lowering is requested, the vehicle will send a series of chirps and flashes to alert the customer that the operation has begun and will continue these alerts until it successfully lowers.

The following conditions must be met for the vehicle to lower remotely:

- The vehicle must not already be in Entry/Exit (Park) ride height.
- The vehicle battery must be fully charged.
- All doors must be closed.
- The key fob must be out of the vehicle.

Canceling Remote Lowering

Vehicle lowering can be cancelled at anytime. When vehicle lowering is canceled, the vehicle will raise up to the next defined level and lock out the remote lowering feature until the ignition has been cycled ON/OFF.

To cancel vehicle lowering, push the key fob air suspension lowering button one time during the lowering process. When vehicle lowering is canceled, the horn will chirp two times and the turn signal lamps will flash four times. Once raising is completed, the horn will chirp one time.

NOTE:
Refer to “Air Suspension System” in “Starting And Operating” for further information.

Replacing The Battery In The Key Fob With Remote Control

The replacement battery model is one CR2032 battery.

NOTE:

- Perchlorate Material — special handling may apply. See www.dtsc.ca.gov/hazardouswaste/perchlorate for further information.
- Do not touch the battery terminals that are on the back housing or the printed circuit board.

1. Remove the emergency key by pushing and holding the release button located on the side of the key fob while pulling the emergency key out with your other hand.

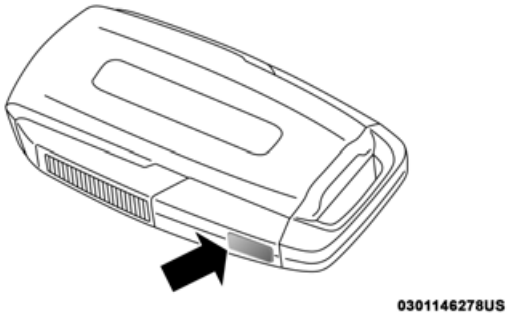

Emergency Key Release button

2. Slightly remove the emergency key from the key fob, approximately 10 mm. The blade of the emergency key should just become visible.

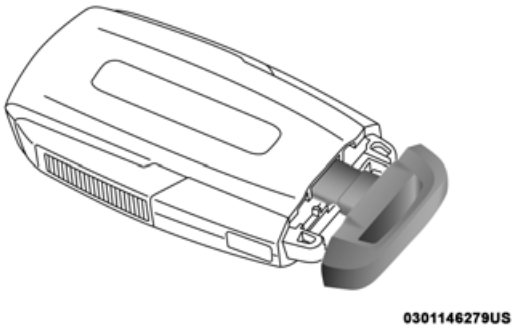

Emergency Key

3. Holding the key fob with the button side facing down, use the emergency key to pry up the battery cover until the cover releases from the key fob housing.

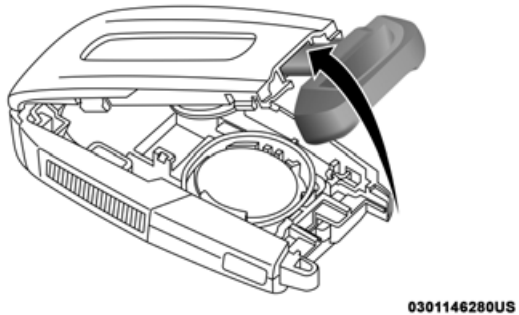

Key Fob Back Cover Removal

4. Remove the battery by using the emergency key to pry the battery out of its housing.

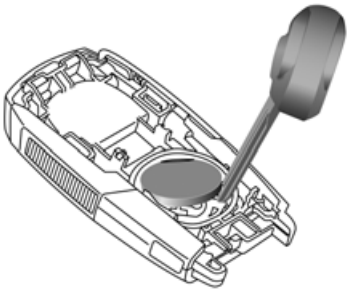

0301146282US

Key Fob Battery Removal

NOTE:
When replacing the battery, ensure the + sign on the battery is facing upward. Avoid touching the new battery with your fingers. Skin oils may cause battery deterioration. If you touch a battery, clean it with rubbing alcohol.

5. Replace the battery by pushing the new battery down on an angle toward the top edge of the opening. Then, push down on the remainder of the battery to lock into place.

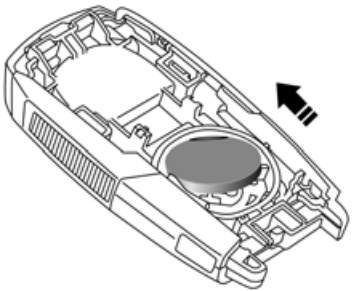

0301146283US

Key Fob Battery Replacement

6. To assemble the key fob case, line up the top edge of the back cover with the top of the fob, and press the edges into the interlocking hinges until all edges snap together with no large visual gaps.

NOTE:
The key fob battery should only be replaced by qualified technicians. If the battery requires replacement, see an authorized dealer.

Alternative Back Cover Removal Method:

The back cover of the key fob can also be removed by inserting the emergency key into the left or right side open slots, and twisting to pop off the cover.

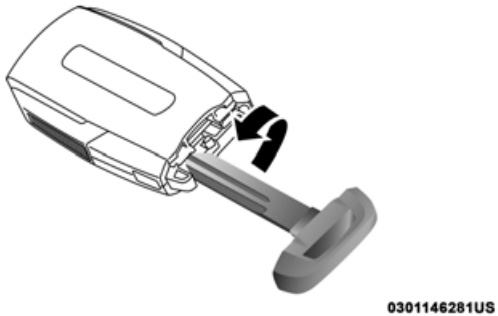

Alternate Key Fob Back Cover Removal Method

NOTE:
The key fob battery should only be replaced by qualified technicians. If the battery requires replacement, see an authorized dealer.

Programming Additional Key Fobs

Programming the key fob may be performed by an authorized dealer.

NOTE:
Once a key fob is programmed to a vehicle, it cannot be repurposed and reprogrammed to another vehicle.

General Information

The following regulatory statement applies to all radio frequency (RF) devices equipped in this vehicle:

This device complies with Part 15 of the FCC Rules and with Industry Canada license-exempt RSS standard(s). Operation is subject to the following two conditions:

1. This device may not cause harmful interference, and
2. This device must accept any interference received, including interference that may cause undesired operation.

NOTE:
Changes or modifications not expressly approved by the party responsible for compliance could void the user's authority to operate the equipment.

IGNITION SWITCH

Keyless Push Button Ignition

This feature allows the driver to operate the ignition switch with the push of a button as long as the Remote Keyless Entry key fob is in the passenger compartment.

The Keyless Push Button Ignition has four operating positions; three of which are labeled and will illuminate when in position. The three positions are OFF, ACC, and ON/RUN. The fourth position is START, during start RUN will illuminate.

NOTE:
In case the ignition switch does not change with the push of a button, the key fob may have a low or dead battery. In this situation, a back up method can be used to operate the ignition switch. Put the nose side (side opposite of the emergency key) of the key fob against the ENGINE START/STOP button, with your foot applied on the brake pedal, and push to operate the ignition switch.

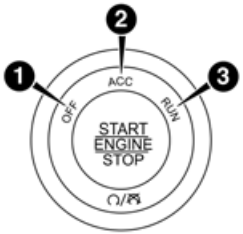

0502124283US

Keyless Push Button Ignition

1 — OFF
2 — ACC (Accessory)
3 — ON/RUN

The push button ignition can be placed in the following modes:

OFF

- The engine is stopped.
- Some electrical devices (e.g. Central locking, alarm, etc.) are still available.

ACC

- Engine is not started.
- Some electrical devices are available.

RUN

- Driving position.
- All the electrical devices are available.

START

- The engine will start.

WARNING!

- **When exiting the vehicle, always remove the key fob from the vehicle and lock your vehicle.**
- **Never leave children alone in a vehicle, or with access to an unlocked vehicle.**
- **Allowing children to be in a vehicle unattended is dangerous for a number of reasons. A child or others could be seriously or fatally injured. Children should be warned not to touch the parking brake, brake pedal or the gear selector.**

(Continued)

WARNING! *(Continued)*

- **Do not leave the key fob in or near the vehicle, or in a location accessible to children, and do not leave the ignition of a vehicle equipped with Keyless Enter-N-Go in the ON/RUN mode. A child could operate power windows, other controls, or move the vehicle.**
- **Do not leave children or animals inside parked vehicles in hot weather. Interior heat build-up may cause serious injury or death.**

CAUTION!

An unlocked vehicle is an invitation for thieves. Always remove key fob from the vehicle and lock all doors when leaving the vehicle unattended.

The engine only runs in the ON/RUN ignition position or from a remote start request.

In case the ignition switch does not change with the push of a button, the key fob may have a low or dead battery. In this situation, a back up method can be used to operate the ignition switch. Put the nose side (side opposite of the emergency key) of the key fob against the ENGINE START/STOP button and push to operate the ignition switch.

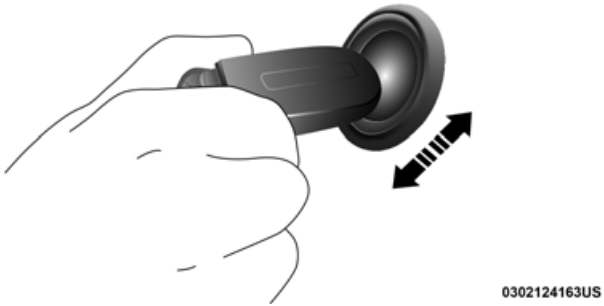

Back Up Starting Method

NOTE:
The key fob may not be able to be detected by the vehicle keyless-go system if it is located next to a mobile phone, laptop or other electronic device; these devices may block the key fob's wireless signal and prevent the keyless-go system from starting the vehicle.

NOTE:
Refer to "Starting The Engine," in "Starting And Operating" for further information.

REMOTE START — IF EQUIPPED

How To Use Remote Start

All of the following conditions must be met before the engine will remote start:

- Gear selector in PARK
- Doors closed
- Hood closed
- HAZARD switch off
- BRAKE switch inactive (brake pedal not pushed)
- Battery at an acceptable charge level
- PANIC button not pushed
- Fuel meets minimum requirement
- System not disabled from previous remote start event
- Vehicle security alarm not active

WARNING!
• **Do not start or run an engine in a closed garage or confined area. Exhaust gas contains Carbon Monoxide (CO) which is odorless and colorless. Carbon Monoxide is poisonous and can cause serious injury or death when inhaled.**

(Continued)

WARNING! *(Continued)*

- **Keep key fobs away from children. Operation of the Remote Start System, windows, door locks or other controls could cause serious injury or death.**

Remote Start Abort Message

The following messages will display in the instrument cluster display if the vehicle fails to remote start or exits remote start prematurely:

- Remote Start Cancelled — Door Open
- Remote Start Cancelled — Hood Open
- Remote Start Cancelled — Fuel Low
- Remote Start Cancelled — System Fault
- Remote Start Disabled — Start Vehicle to Reset

The instrument cluster display message stays active until the ignition is turned to the ON/RUN position.

To Enter Remote Start Mode

Push and release the Remote Start button on the key fob twice within five seconds. The parking lights will flash, vehicle doors will lock, and the horn will chirp twice (if programmed). Once the vehicle has started, the engine will run for 15 minutes.

NOTE:

- If your power door locks were unlocked, Remote Start will automatically lock the doors.
- If an engine fault is present or fuel level is low, the vehicle will start and then shut down in 10 seconds.
- The park lamps will turn on and remain on during Remote Start mode.
- For security, power window and power sunroof operation (if equipped) are disabled when the vehicle is in the Remote Start mode.
- The engine can be started two consecutive times (two 15-minute cycles) with the key fob. However, the ignition must be placed in the ON/RUN position before you can repeat the start sequence for a third cycle.

To Exit Remote Start Mode Without Driving The Vehicle

Push and release the remote start button one time or allow the engine to run for the entire 15-minute cycle.

NOTE:
To avoid unintentional shutdowns, the system will disable with a one time push of the remote start button for two seconds after receiving a valid remote start request.

To Exit Remote Start Mode And Drive The Vehicle

Before the end of the 15-minute cycle, push and release the unlock button on the key fob to unlock the doors and disarm the vehicle security alarm system (if equipped). Then, prior to the end of the 15-minute cycle, cycle the ignition to the ON/RUN position.

Remote Start Comfort Systems — If Equipped

When Remote Start is activated, the heated steering wheel and driver heated seat features will automatically turn on in cold weather. In warm weather, the driver vented seat feature will automatically turn on when the remote start is activated. These features will stay on through the duration of Remote Start or until the ignition switch is placed in the ON/RUN mode.

NOTE:
The Remote Start Comfort System can be activated and deactivated through the Uconnect System. Refer to "Uconnect Settings" in "Multimedia" for further information on Remote Start Comfort System operation.

General Information

The following regulatory statement applies to all radio frequency (RF) devices equipped in this vehicle:

This device complies with Part 15 of the FCC Rules and with Industry Canada license-exempt RSS standard(s). Operation is subject to the following two conditions:

1. This device may not cause harmful interference, and
2. This device must accept any interference received, including interference that may cause undesired operation.

NOTE:
Changes or modifications not expressly approved by the party responsible for compliance could void the user's authority to operate the equipment.

SENTRY KEY

The Sentry Key Immobilizer system prevents unauthorized vehicle operation by disabling the engine. The system does not need to be armed or activated. Operation is automatic, regardless of whether the vehicle is locked or unlocked.

The system uses a key fob, keyless push button ignition and a RF receiver to prevent unauthorized vehicle operation. Therefore, only key fobs that are programmed to the vehicle can be used to start and operate the vehicle. The system cannot reprogram a key fob obtained from another vehicle.

After turning the ignition switch to the ON/RUN position, the vehicle security light will turn on for three seconds for a bulb check. If the light remains on after the bulb check, it indicates that there is a problem with the electronics. In addition, if the light begins to flash after the bulb check, it indicates that someone attempted to start the engine with an invalid key fob. In the event that a valid key fob is used to start the engine but there is an issue with the vehicle electronics, the engine will start and shut off after two seconds.

If the vehicle security light turns on during normal vehicle operation (vehicle running for longer than ten seconds), it indicates that there is a fault in the electronics. Should this occur, have the vehicle serviced as soon as possible by an authorized dealer.

CAUTION!
The Sentry Key Immobilizer system is not compatible with some aftermarket remote starting systems. Use of these systems may result in vehicle starting problems and loss of security protection.

All of the key fobs provided with your new vehicle have been programmed to the vehicle electronics.

Key Programming

Programming key fobs may be performed at an authorized dealer.

Replacement Keys

NOTE:
Only key fobs that are programmed to the vehicle electronics can be used to start and operate the vehicle. Once a key fob is programmed to a vehicle, it cannot be programmed to any other vehicle.

CAUTION!
• **Always remove the key fobs from the vehicle and lock all doors when leaving the vehicle unattended.** • **For vehicles equipped with Keyless Enter-N-Go — Ignition, always remember to place the ignition in the OFF position.**

NOTE:
Duplication of key fobs may be performed at an authorized dealer. This procedure consists of programming a blank key fob to the vehicle electronics. A blank key fob is one that has never been programmed.

When having the Sentry Key Immobilizer System serviced, bring all vehicle keys with you to an authorized dealer.

General Information

The following regulatory statement applies to all radio frequency (RF) devices equipped in this vehicle:

This device complies with Part 15 of the FCC Rules and with Industry Canada license-exempt RSS standard(s). Operation is subject to the following two conditions:

1. This device may not cause harmful interference, and
2. This device must accept any interference received, including interference that may cause undesired operation.

NOTE:
Changes or modifications not expressly approved by the party responsible for compliance could void the user's authority to operate the equipment.

VEHICLE SECURITY ALARM

The vehicle security alarm monitors the vehicle doors, tailgate, and ignition for unauthorized operation. When the vehicle security alarm is activated, interior switches for door locks are disabled. The system will turn the horn off after 29 seconds, 5 seconds between cycles, up to 8 cycles if the trigger remains active and then the vehicle security alarm will rearm itself.

To Arm The System

Follow these steps to arm the vehicle security alarm:

1. Remove the key from the ignition system (refer to "Starting The Engine" in "Starting And Operating" for further information).
   - Make sure the vehicle ignition system is "OFF."
2. Perform one of the following methods to lock the vehicle:
   - Push lock button on the interior power door lock switch with the driver and/or passenger door open.
   - Push the lock button on the exterior Passive Entry Door Handle with a valid key fob available in the same exterior zone (refer to "Keyless Enter- N-Go — Passive Entry" in "Getting To Know Your Vehicle" for further information).
   - Push the lock button on the key fob.
3. If any doors are open, close them.

The vehicle security alarm will set when you use the power door locks, or use the key fob to lock the doors. After all the doors are locked and closed, the vehicle security light, in the instrument panel cluster, will flash rapidly for about 16 seconds to indicate that the alarm is being set. After the alarm is set, the vehicle security light will flash at a slower rate to indicate that the system is armed.

To Disarm The System

The vehicle security alarm can be disarmed using any of the following methods:

1. Push the unlock button on the key fob.
2. Grasp the Passive Entry Unlock Door Handle with a valid key fob within 5 ft (1.5 m) of the passive entry door handle. If equipped, refer to "Keyless Enter-N-Go — Passive Entry" in "Getting To Know Your Vehicle" for further information.
3. Place the ignition out of the “OFF” position.

The vehicle security alarm is designed to protect your vehicle. However, you can create conditions where the system will give you a false alarm. If one of the previously

described arming sequences has occurred, the vehicle security alarm will arm regardless of whether you are in the vehicle or not. If you remain in the vehicle and open a door, the alarm will sound. If this occurs, disarm the vehicle security alarm.

If the vehicle security alarm is armed and the battery becomes disconnected, the vehicle security alarm will remain armed when the battery is reconnected; the exterior lights will flash, and the horn will sound. If this occurs, disarm the vehicle security alarm.

Rearming Of The System

If something triggers the alarm, and no action is taken to disarm it, the vehicle security alarm will turn the horn off after 29 seconds, 5 seconds between cycles, up to 8 cycles if the trigger remains active and then the vehicle security alarm will rearm itself.

Security System Manual Override

The vehicle security alarm will not arm/disarm if you lock/unlock the doors using the manual door lock plunger.

DOORS

Manual Door Locks

Front and rear doors may be locked by moving the lock knob down. The lock knobs will unlock when the interior handle is used to open the doors.

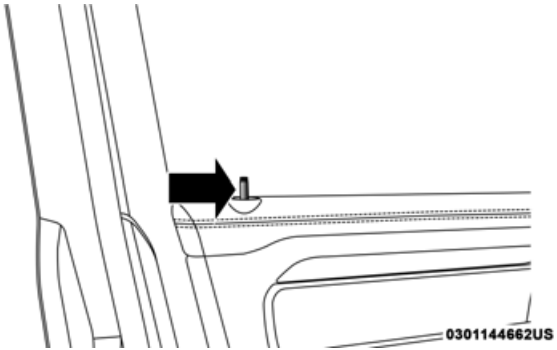

Door Lock Knob

Front doors may be opened with the inside door handle without lifting the lock knob.

Doors locked before closing will remain locked when closed.

The emergency key will unlock the driver door lock on your vehicle.

WARNING!

- **Do not leave children or animals inside parked vehicles in hot weather. Interior heat build-up may cause serious injury or death.**
- **For personal security and safety in the event of an collision, lock the vehicle doors as you drive as well as when you park and leave the vehicle.**
- **Before exiting a vehicle, always shift the automatic transmission into PARK, apply the parking brake, turn the vehicle OFF, remove the key fobs from vehicle, and lock all doors. and lock your vehicle.**
- **Never leave children alone in a vehicle, or with access to an unlocked vehicle. Leaving children in a vehicle unattended is dangerous for a number of reasons. A child or others could be seriously or fatally injured. Children should be warned not to touch the parking brake, brake pedal or the gear selector.**

(Continued)

WARNING! ***(Continued)***

- **Allowing children to be in a vehicle unattended is dangerous for a number of reasons. A child or others could be seriously or fatally injured. Children should be warned not to touch the parking brake, brake pedal or the gear selector.**
- **Do not leave the key fob in or near the vehicle, or in a location accessible to children, and do not leave the ignition of a vehicle equipped with Keyless Enter-N-Go in the ACC or ON/RUN mode. A child could operate power windows, other controls, or move the vehicle.**

Power Door Locks — If Equipped

The power door lock switches are on each front door trim panel. Use these switches to lock or unlock the doors.

NOTE:
The key fob may not be able to be detected by the vehicle Keyless Enter-N-Go system if it is located next to a mobile phone, laptop or other electronic device; these devices may block the key fob's wireless signal and prevent the Keyless Enter-N-Go system from starting the vehicle.

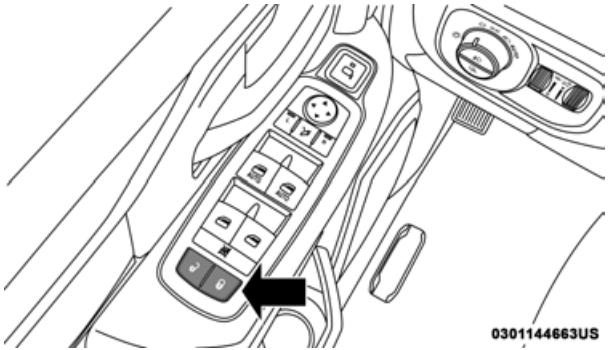

Power Door Lock Switches

While in the ACC or ON/RUN positions, if you push the power door lock switch, and any front door is open, the power locks will not operate. This prevents you from accidentally locking your key fob in the vehicle. Removing the key fob or closing the door will allow the locks to operate. A chime will sound if the key fob is in the ignition switch and a door is open, as a reminder to remove the key fob.

Power Side Steps — If Equipped

The Power Side Steps will extend a step for easier entry and exit of the vehicle.

When configured for "Auto" mode, the Power Side Steps will deploy when either the driver's or passenger's side door is opened, or when the deploy setting is activated through the touchscreen. When configured for "Store" mode, the steps will stay in their position but can also be deployed manually through the radio.

If the vehicle speed exceeds 5 mph (8 km/h), or if the retract setting is selected in the touchscreen, the steps will retract.

Refer to "Uconnect Settings" in "Multimedia" for additional information.

Keyless Enter-N-Go — Passive Entry

The Passive Entry system is an enhancement to the vehicle's Remote Keyless Entry system and a feature of Keyless Enter-N-Go. This feature allows you to lock and unlock the vehicle's door(s) without having to push the key fob lock or unlock buttons.

NOTE:

- Passive Entry may be programmed ON/OFF. Refer to "Uconnect Settings" in "Multimedia" for further information.
- If wearing gloves on your hands, or if it has been raining/snowing on the Passive Entry door handle, the unlock sensitivity can be affected, resulting in a slower response time.
- If the vehicle is unlocked by Passive Entry and no door is opened within 60 seconds, the vehicle will re-lock and if equipped will arm the security alarm.
- The vehicles security alarm can be armed/disarmed by pushing the passive entry key fob lock/unlock buttons (if equipped).
- The key fob may not be able to be detected by the vehicle passive entry system if it is located next to a mobile phone, laptop or other electronic device; these devices may block the key fob's wireless signal and prevent the passive entry handle from locking/unlocking the vehicle.

To Unlock From The Driver's Side:

With a valid Passive Entry key fob within 5 ft (1.5 m) of the driver door handle, grab the front driver door handle to unlock the driver's door automatically. The interior door panel lock knob will raise when the door is unlocked.

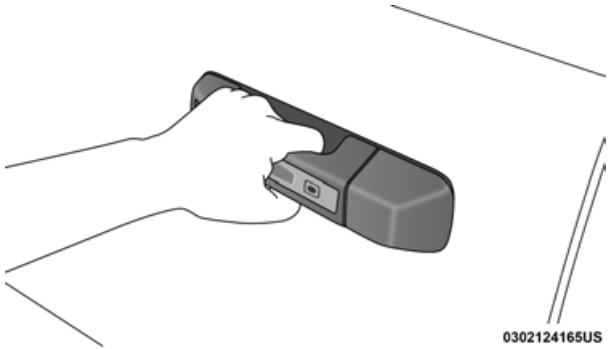

Grab The Door Handle To Unlock

NOTE:
If "Unlock All Doors 1st Press" is programmed, all doors will unlock when you grab hold of the front driver's door handle. To select between "Unlock Driver Door 1st Press" and "Unlock All Doors 1st Press," refer to "Uconnect Settings" in "Multimedia" for further information.

To Unlock From The Passenger Side:

With a valid Passive Entry key fob within 5 ft (1.5 m) of the passenger door handle, grab the front passenger door handle to unlock all doors automatically. The interior door panel lock knob will raise when the door is unlocked.

NOTE:
All doors will unlock when the front passenger door handle is grabbed regardless of the driver's door unlock preference setting ("Unlock Driver Door 1st Press" or "Unlock All Doors 1st Press").

Preventing Inadvertent Locking Of Passive Entry Key Fob In Vehicle:

To minimize the possibility of unintentionally locking a Passive Entry key fob inside your vehicle, the Passive Entry system is equipped with an automatic door unlock feature which will function if the ignition switch is in the OFF position.

If one of the vehicle doors is open and the door panel switch is used to lock the vehicle, once all open doors have been closed the vehicle checks the inside and outside of the vehicle for any valid Passive Entry key fobs. If one of the vehicle's Passive Entry key fobs is detected inside the vehicle, and no other valid Passive Entry key fobs are detected outside the vehicle, the Passive Entry System automatically unlocks all vehicle doors and chirps the horn three times (on the third attempt ALL doors will lock and the Passive Entry key fob can be locked in the vehicle).

To Lock The Vehicle's Doors:

With one of the vehicle's Passive Entry key fobs within 5 ft (1.5 m) of the driver or passenger front door handles, push the door handle lock button to lock all doors.

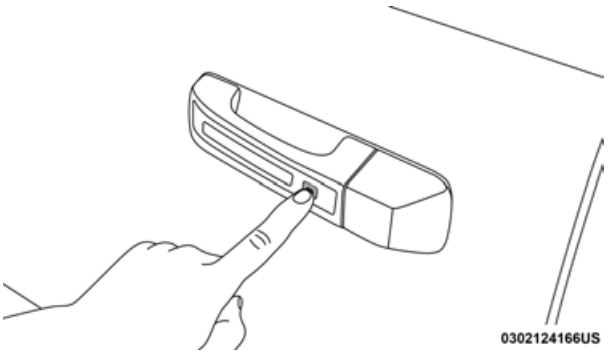

Push The Door Handle Button To Lock

Do NOT grab the door handle when pushing the door handle lock button. This could unlock the door(s).

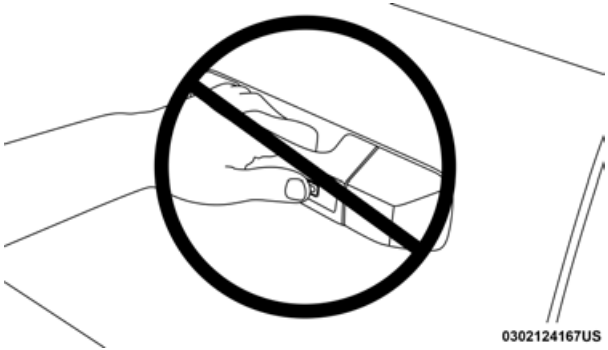

Do NOT Grab The Door Handle When Locking

NOTE:

- After pushing the door handle lock button, you must wait two seconds before you can lock or unlock the doors, using either Passive Entry door handle. This is done to allow you to check if the vehicle is locked by pulling the door handle, without the vehicle reacting and unlocking.
- The Passive Entry system depends on a key fob that is not fully discharged of its coin battery capacity.
- The LED light on the key fob will not blink if the key fob battery is low or fully depleted, but a low key fob battery condition will still support the Passive Entry system functionality. When the key fob battery is low, the instrument cluster will display a message indicating that the key fob battery is low. Refer to "Keys" in "Getting To Know Your Vehicle" for further information.

The vehicle doors can also be locked by using the key fob lock button or the lock button located on the vehicle's interior door panel.

General Information

The following regulatory statement applies to all radio frequency (RF) devices equipped in this vehicle:

This device complies with Part 15 of the FCC Rules and with Industry Canada license-exempt RSS standard(s). Operation is subject to the following two conditions:

1. This device may not cause harmful interference, and
2. This device must accept any interference received, including interference that may cause undesired operation.

NOTE:
Changes or modifications not expressly approved by the party responsible for compliance could void the user's authority to operate the equipment.

Automatic Door Locks — If Equipped

The auto door lock feature default condition is enabled. When enabled, the door locks will lock automatically when the vehicle's speed exceeds 15 mph (24 km/h). The auto door lock feature can be enabled or disabled by an authorized dealer per written request of the customer. Please see an authorized dealer for service.

Automatic Doors Unlock — If Equipped

This feature unlocks all of the doors of the vehicle when either front door is opened. This will occur only after the vehicle has been shifted into the PARK position after the vehicle has been driven (shifted out of PARK and all doors closed).

Automatic Doors Unlock Programming — If Equipped

The Automatic Doors Unlock feature can be enabled or disabled as follows:

- For vehicles not equipped with a touchscreen radio, refer to “Instrument Cluster Display” in “Getting To Know Your Instrument Panel” for further information.
- For vehicles equipped with a touchscreen radio, refer to “Uconnect Settings” in “Multimedia” for further information.

NOTE:
Use the Auto Unlock Doors feature in accordance with local laws.

Child-Protection Door Lock

To provide a safer environment for children riding in the rear seat, the rear doors (if equipped) of your vehicle have the Child-Protection Door Lock system.

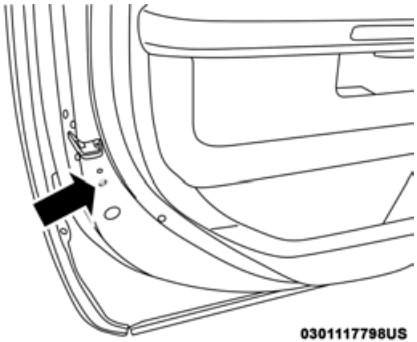

Child-Protection Door Lock Location

To use the system, open each rear door, use a flat blade screwdriver (or emergency key) and rotate the dial to engage and disengage the Child-Protection locks. When the system on a door is engaged, that door can only be opened by using the outside door handle even if the inside door lock is in the unlocked position.

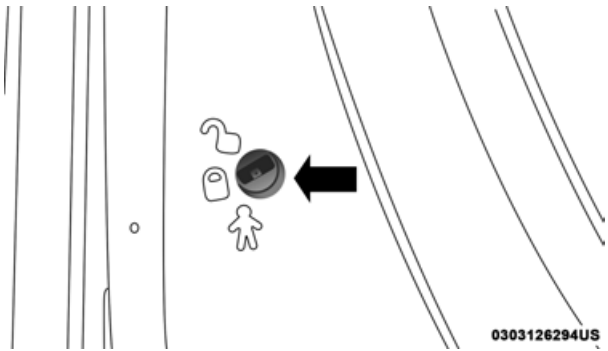

Child Lock Control

WARNING!
Avoid trapping anyone in the vehicle in a collision. Remember that the sliding doors cannot be opened from the inside door handle when the Child Protection Door Locks are engaged.

NOTE:

- After setting the Child-Protection Door Lock system, always test the door from the inside to make certain it is in the desired position.
- For emergency exit with the system engaged, move the door lock switch to the unlock position, roll down the window, and open the door with the outside door handle.

SEATS

Seats are a part of the Occupant Restraint System of the vehicle.

WARNING!
• **It is dangerous to ride in a cargo area, inside or outside of a vehicle. In a collision, people riding in these areas are more likely to be seriously injured or killed.** • **Do not allow people to ride in any area of your vehicle that is not equipped with seats and seat belts. In a collision, people riding in these areas are more likely to be seriously injured or killed.** • **Be sure everyone in your vehicle is in a seat and using a seat belt properly.**

Manual Front Seat Adjustment

Manual Front Seat Forward/Rearward Adjustment

Both front seats are adjustable forward or rearward. The manual seat adjustment handle is located under the seat cushion at the front edge of each seat.

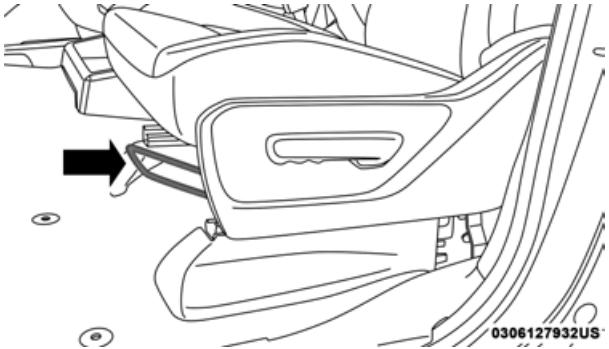

Manual Seat Adjustment Bar

While sitting in the seat, pull up on the handle and slide the seat forward or rearward. Release the bar once you have reached the desired position. Then, using body pressure, move forward and rearward on the seat to be sure that the seat adjusters have latched.

WARNING!

- **Adjusting a seat while driving may be dangerous. Moving a seat while driving could result in loss of control which could cause a collision and serious injury or death.**
- **Seats should be adjusted before fastening the seat belts and while the vehicle is parked. Serious injury or death could result from a poorly adjusted seat belt.**

Manual Front Seat Recline Adjustment

The recline lever is located on the outboard side of the seat. To recline the seat, lean forward slightly, lift the lever, lean back to the desired position and release the lever. To return the seatback to its normal upright position, lean forward and lift the lever. Release the lever once the seat back is in the upright position.

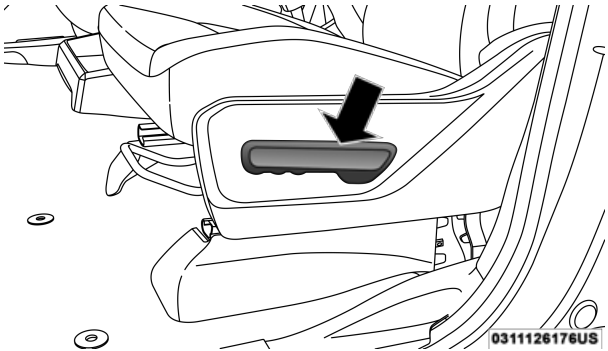

Manual Recline Lever

WARNING!
• **Do not stand or lean in front of the seat while actuating the handle. The seatback may swing forward and hit you causing injury.** • **To avoid injury, place your hand on the seatback and actuate the handle, then position the seatback in the desired position.**

40-20-40 Front Bench Seat — If Equipped

The seat is divided into three segments. The outboard seat portions are each 40% of the total width of the seat. On some models, the back of the center portion (20%) easily folds down to provide an armrest/center storage compartment.

Manual Rear Seat Adjustment

WARNING!
Do not pile luggage or cargo higher than the top of the seatback. This could impair visibility or become a dangerous projectile in a sudden stop or collision.

Reclining Rear Seats — If Equipped

The recliner handle is located on the outside of the seat cushion. To adjust the seatback, lift upward on the handle, lean back on the seatback and when you reach the desired position, release the handle.

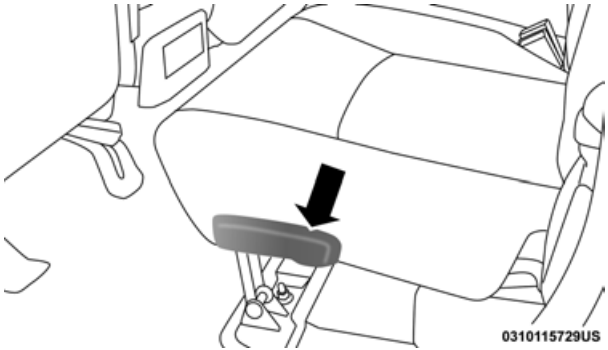

Rear Seat Recliner Handle

WARNING!
Do not ride with the seatback reclined so that the shoulder belt is no longer resting against your chest. In a collision you could slide under the seat belt, which could result in serious injury or death.

Power Driver Seat Adjustment — If Equipped

Some models may be equipped with an eight-way power driver's seat. The power seat switches are located on the outboard side of the driver's seat cushion. There are two power seat switches that are used to control the movement of the seat cushion and the seatback.

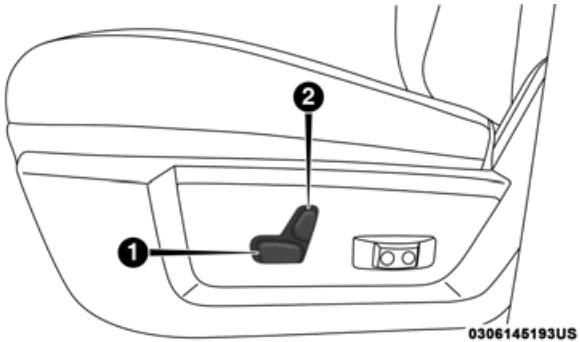

Power Seat Switches

1 — Power Seat Switch
2 — Power Seatback Switch

Adjusting The Seat Forward Or Rearward

The seat can be adjusted both forward and rearward. Push the seat switch forward or rearward. The seat will move in the direction of the switch. Release the switch when the desired position has been reached.

Adjusting The Seat Up Or Down

The height of the seats can be adjusted up or down. Pull upward or push downward on the rear of seat switch, the seat will move in the direction of the switch. Release the switch when the desired position has been reached.

Tilting The Seat Up Or Down

The angle of the seat cushion can be adjusted in four directions. Pull upward or push downward on the front or rear of the seat switch, the front or rear of the seat cushion will move in the direction of the switch. Release the switch when the desired position is reached.

Reclining The Seatback

The angle of the seatback can be adjusted forward or rearward. Push the seatback switch forward or rearward, the seat will move in the direction of the switch. Release the switch when the desired position is reached.

WARNING!

- **Adjusting a seat while driving may be dangerous. Moving a seat while driving could result in loss of control which could cause a collision and serious injury or death.**
- **Seats should be adjusted before fastening the seat belts and while the vehicle is parked. Serious injury or death could result from a poorly adjusted seat belt.**
- **Do not ride with the seatback reclined so that the shoulder belt is no longer resting against your chest. In a collision you could slide under the seat belt, which could result in serious injury or death.**

CAUTION!

Do not place any article under a power seat or impede its ability to move as it may cause damage to the seat controls. Seat travel may become limited if movement is stopped by an obstruction in the seat's path.

Power Lumbar — If Equipped

Vehicles equipped with power driver or passenger seats may be also be equipped with power lumbar. The power lumbar switch is located on the outboard side of the power seat. Push the switch forward to increase the lumbar support. Push the switch rearward to decrease the lumbar support.

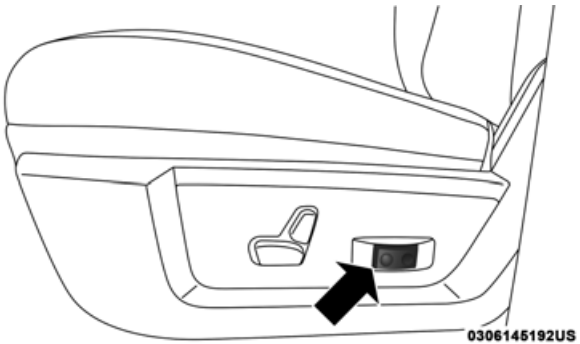

Lumbar Control Switch

Driver Memory Seats — If Equipped

This feature allows the driver to store up to two different memory profiles for easy recall through memory buttons. Each memory profile contains desired position settings for the driver's seat, side mirrors, adjustable pedals (if equipped), and a set of desired radio station presets. Your remote keyless entry key fob can also be programmed to recall the same positions when the unlock button is pushed.

NOTE:
Your vehicle is equipped with two key fobs, one key fob can be linked to memory position 1 and the other key fob can be linked to memory position 2.

The driver memory seat buttons are located on the driver door, next to the door handle.

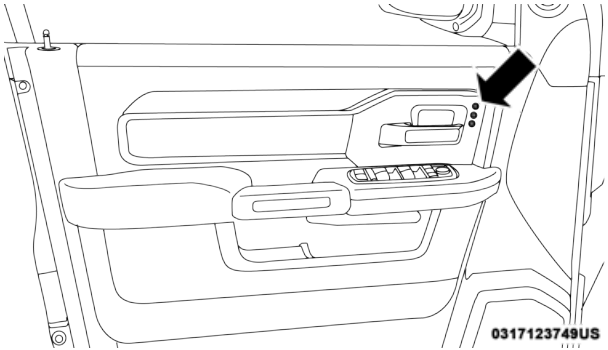

Driver Memory Seat Buttons

Programming The Memory Feature

To create a new memory profile, perform the following:

1. Cycle the vehicle's ignition to the ON/RUN position (do not start the engine).
2. Adjust all memory profile settings to desired preferences (i.e., driver's seat, outside mirrors, adjustable pedals (if equipped), and radio station presets).
3. Push and release the set (S) button on the memory switch.
4. Within five seconds, push and release either of the memory buttons (1) or (2). The instrument cluster display will show which memory position has been set.

NOTE:
Memory profiles can be set without the vehicle in PARK.

Linking And Unlinking The Remote Keyless Entry Key Fob To Memory

Your key fob can be programmed to recall one of two pre-programmed memory profiles by pushing the unlock button on the key fob.

NOTE:
Before programming your key fob you must select the "Personal Settings Linked to Key Fob" feature through the Uconnect Settings. Refer to "Uconnect Settings" in "Multimedia" for further information.

To program your key fob, perform the following:

1. Cycle the vehicle's ignition to the OFF position.
2. Select a desired memory profile 1 or 2.

NOTE:
If a memory profile has not already been set, refer to "Programming The Memory Feature" in this section for instructions on how to set a memory profile.

3. Once the profile has been recalled, push and release the set (S) button on the memory switch.

4. Push and release button (1) or (2) accordingly. “Memory Profile Set” (1 or 2) will display in the instrument cluster.

5. Push and release the lock button on the key fob within 10 seconds.

NOTE:
Your key fob can be unlinked to your memory settings by pushing the set (S) button, and within 10 seconds, followed by pushing the unlock button on the key fob.

Memory Position Recall

NOTE:
The vehicle speed must be lower than 5 mph (8 km/h) to recall memory positions. If a recall is attempted when the vehicle speed is greater than 5 mph (8 km/h), a message will be displayed in the instrument cluster display.

Driver One Memory Position Recall

- To recall the memory settings for driver one using the memory buttons on the door panel, push memory button (1).
- To recall the memory settings for driver one using the key fob, push the unlock button on the key fob linked to memory position 1.

Driver Two Memory Position Recall

- To recall the memory setting for driver two using the memory buttons on the door panel, push memory button (2).
- To recall the memory settings for driver two using the key fob, push the unlock button on the key fob linked to memory position 2.

A recall can be cancelled by pushing any of the memory buttons during a recall (S, 1, or 2). When a recall is canceled, the driver's seat and the power pedals (if equipped) stop moving. A delay of one second will occur before another recall can be selected.

Easy Entry/Exit Seat

This feature provides automatic driver's seat positioning to enhance driver mobility when entering and exiting the vehicle.

The distance the driver's seat moves depends on where you have the driver's seat positioned when you remove the key fob from the ignition.

- When you remove the key fob from the ignition, the driver's seat will move about 2.4 inches (60 mm) rearward if the driver's seat position is greater than or equal to 2.7 inches (67.7 mm) forward of the rear stop. The seat will return to its previously set position when you place the ignition into the ACC or RUN position.
- When you remove the key fob from the ignition, the driver's seat will move to a position 0.3 inches (7.7 mm) forward of the rear stop if the driver's seat position is between 0.9 inches and 2.7 inches (22.7 mm and 67.7 mm) forward of the rear stop. The seat will return to its previously set position when you place the ignition to the ACC or RUN position.
- The Easy Entry/Easy Exit feature is disabled when the driver's seat position is less than 0.9 inches (22.7 mm) forward of the rear stop. At this position, there is no benefit to the driver by moving the seat for Easy Exit or Easy Entry.

Each stored memory setting will have an associated Easy Entry and Easy Exit position.

NOTE:
The Easy Entry/Exit feature is not enabled when the vehicle is delivered from the factory. The Easy Entry/Exit feature is enabled (or later disabled) through the programmable features in the Uconnect system. Refer to "Uconnect Settings" in "Multimedia" for further information.

Heated Seats — If Equipped

On some models, the front and rear seats may be equipped with heaters located in the seat cushions and seat backs.

WARNING!

- **Persons who are unable to feel pain to the skin because of advanced age, chronic illness, diabetes, spinal cord injury, medication, alcohol use, exhaustion or other physical condition must exercise care when using the seat heater. It may cause burns even at low temperatures, especially if used for long periods of time.**
- **Do not place anything on the seat or seatback that insulates against heat, such as a blanket or cushion. This may cause the seat heater to overheat. Sitting in a seat that has been overheated could cause serious burns due to the increased surface temperature of the seat.**

Front Heated Seats

The heated seats control buttons are located on the center instrument panel below the touchscreen, and are also located within the climate or controls screen of the touchscreen.

- Push the heated seat button once to turn the HI setting on.
- Push the heated seat button a second time to turn the MED setting on.
- Push the heated seat button a third time to turn the LO setting on.
- Push the heated seat button a fourth time to turn the heating elements off.

NOTE:

- The engine must be running for the heated seats to operate.
- The level of heat selected will stay on until the operator changes it.

Vehicles Equipped With Remote Start

On models that are equipped with remote start, the driver's seat can be programmed to come on during a remote start.

This feature can be programmed through the Uconnect system. Refer to "Uconnect Settings" in "Multimedia" for further information.

Rear Heated Seats

On some models, the two outboard rear seats are equipped with heated seats. The heated seat switches for these seats are located on the rear of the center console.

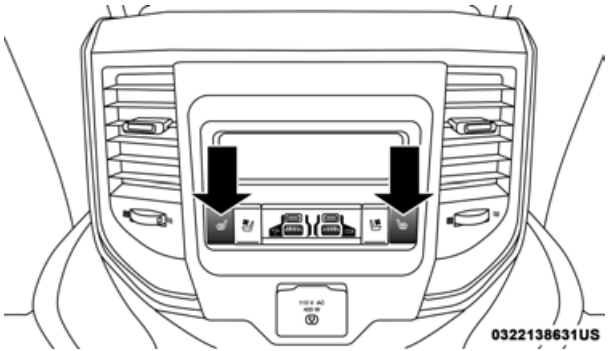

Rear Heated Seat Switches

There are two heated seat switches that allow the rear passengers to operate the seats independently. You can choose from HI, MED, LO, or OFF heat settings. Amber indicator lights in each switch indicate the level of heat in use.

- Push the heated seat button once to turn the HI setting on.
- Push the heated seat button a second time to turn the MED setting on.
- Push the heated seat button a third time to turn the LO setting on.
- Push the heated seat button a fourth time to turn the heating elements off.

NOTE:

- The level of heat selected will stay on until the operator changes it.
- Once a heat setting is selected, heat will be felt within two to five minutes.
- The engine must be running for the heated seats to operate.

Ventilated Seats — If Equipped

Front Ventilated Seats

Located in the seat cushion are small fans that draw the air from the passenger compartment and move air through fine perforations in the seat cover to help keep the driver and front passenger cooler in higher ambient temperatures. The fans operate at three speeds, HI, MED and LO.

The front ventilated seats control buttons are located on the center instrument panel below the touchscreen, and are also located within the climate or controls screen of the touchscreen.

- Press the ventilated seat button once to choose HI.
- Press the ventilated seat button a second time to choose MED.
- Press the ventilated seat button a third time to choose LO.
- Press the ventilated seat button a fourth time to turn the ventilation off.

NOTE:
The engine must be running for the ventilated seats to operate.

Vehicles Equipped With Remote Start

On models that are equipped with remote start, the ventilated seats can be programmed to come on during a remote start.

This feature can be programmed through the Uconnect system. Refer to "Uconnect Settings" in "Multimedia" for further information.

HEAD RESTRAINTS

Head restraints are designed to reduce the risk of injury by restricting head movement in the event of a rear impact. Head restraints should be adjusted so that the top of the head restraint is located above the top of your ear.

WARNING!

- **All occupants, including the driver, should not operate a vehicle or sit in a vehicle's seat until the head restraints are placed in their proper positions in order to minimize the risk of neck injury in the event of a crash.**
- **Head restraints should never be adjusted while the vehicle is in motion. Driving a vehicle with the head restraints improperly adjusted or removed could cause serious injury or death in the event of a collision.**

NOTE:
Do not reverse the head restraints (making the rear of the head restraint face forward) in an attempt to gain additional clearance to the back of your head.

Front Head Restraints

Four-Way Head Restraints — If Equipped

Your vehicle may be equipped with front four-way driver and passenger head restraints.

To raise the head restraint, pull upward on the head restraint. To lower the head restraint, push the adjustment button, located at the base of the head restraint, and push downward on the head restraint.

To adjust the head restraint forward, pull the top of the head restraint toward the front of the vehicle as desired and release. To adjust the head restraint rearward, pull the top of the head restraint to the forward most position and release. The head restraint will return to the rear most position.

NOTE:
If your vehicle is equipped with a front bench seat, the center head restraint is not adjustable or removable.

Two-Way Head Restraints — If Equipped

Your vehicle may be equipped with front two-way driver and passenger head restraints.

To raise the head restraint, pull upward on the head restraint. To lower the head restraint, push the adjustment button, located at the base of head restraint, and push downward on the head restraint.

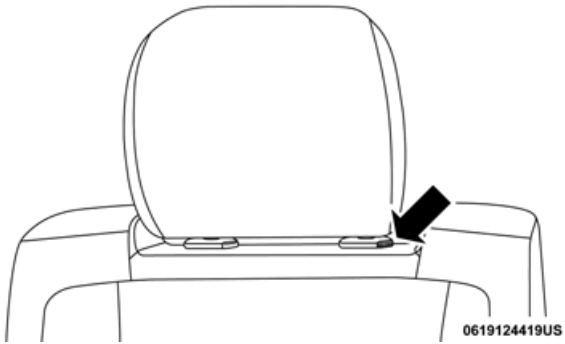

Head Restraint Adjustment Button

NOTE:
The head restraints should only be removed by qualified technicians, for service purposes only. If either of the head restraints require removal, see an authorized dealer.

WARNING!
• **All occupants, including the driver, should not operate a vehicle or sit in a vehicle's seat until the head restraints are placed in their proper positions in order to minimize the risk of neck injury in the event of a crash.** • **Head restraints should never be adjusted while the vehicle is in motion. Driving a vehicle with the head restraints improperly adjusted or removed could cause serious injury or death in the event of a collision.**

Rear Head Restraint Adjustment

The rear seats are equipped with adjustable and removable head restraints. To raise the head restraint, pull upward on the head restraint. To lower the head restraint, push the adjustment button located on the base of the head restraint and push downward on the head restraint.

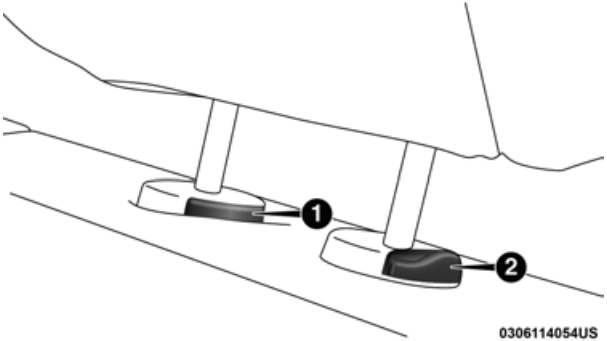

Release/Adjustment Buttons
1 — Release Button
2 — Adjustment Button

NOTE:

- The rear center head restraint (Crew Cab) has only one adjustment position that is used to aid in the routing of a tether. Refer to "Occupant Restraint Systems" in "Safety" for further information.
- Do not reposition the head restraint 180 degrees to the incorrect position in an attempt to gain additional clearance to the back of the head.

Rear Head Restraint Removal

To remove the head restraint, push the adjustment button and the release button while pulling upward on the whole assembly. To reinstall the head restraint, put the head restraint posts into the holes and adjust it to the appropriate height.

NOTE:
To remove outboard restraints, the rear seat bottom must be folded up.

WARNING!

- **A loose head restraint thrown forward in a collision or hard stop could cause serious injury or death to occupants of the vehicle. Always securely stow removed head restraints in a location outside the occupant compartment.**
- **ALL the head restraints MUST be reinstalled in the vehicle to properly protect the occupants. Follow the re-installation instructions above prior to operating the vehicle or occupying a seat.**

STEERING WHEEL

Tilt Steering Column

This feature allows you to tilt the steering column upward or downward. The tilt lever is located on the steering column, below the multifunction lever.

Pull the lever toward the steering wheel to unlock the steering column. With one hand firmly on the steering wheel, move the steering column up or down, as desired. Release the lever to lock the steering column firmly in place.

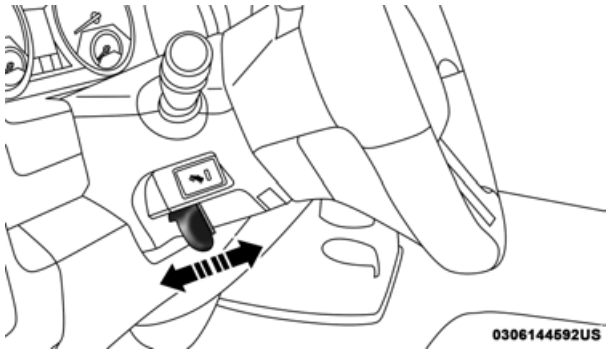

Tilt Steering Lever

WARNING!
Do not adjust the steering column while driving. Adjusting the steering column while driving or driving with the steering column unlocked, could cause the driver to lose control of the vehicle. Failure to follow this warning may result in serious injury or death.

Heated Steering Wheel — If Equipped

The steering wheel contains a heating element that helps warm your hands in cold weather. The heated steering wheel has only one temperature setting. Once the heated steering wheel has been turned on, it will stay on until the operator turns it off. The heated steering wheel may not turn on when it is already warm.

The heated steering wheel control button is located on the center instrument panel below the touchscreen, as well as within the climate or controls screen of the touchscreen.

- Press the heated steering wheel button once to turn the heating element on.
- Press the heated steering wheel button a second time to turn the heating element off.

NOTE:
The engine must be running for the heated steering wheel to operate.

Vehicles Equipped With Remote Start

On models that are equipped with remote start, the heated steering wheel can be programmed to come on during a remote start.

This feature can be programmed through the Uconnect system. Refer to “Uconnect Settings” in “Multimedia” for further information.

WARNING!
• **Persons who are unable to feel pain to the skin because of advanced age, chronic illness, diabetes, spinal cord injury, medication, alcohol use, exhaustion, or other physical conditions must exercise care when using the steering wheel heater. It may cause burns even at low temperatures, especially if used for long periods.** • **Do not place anything on the steering wheel that insulates against heat, such as a blanket or steering wheel covers of any type and material. This may cause the steering wheel heater to overheat.**

DRIVER ADJUSTABLE PEDALS — IF EQUIPPED

The adjustable pedals system is designed to allow a greater range of driver comfort for steering wheel tilt and seat position. This feature allows the brake and accelerator pedals to move toward or away from the driver to provide improved position with the steering wheel.

The adjustable pedal switch is located to the left side of the steering column.

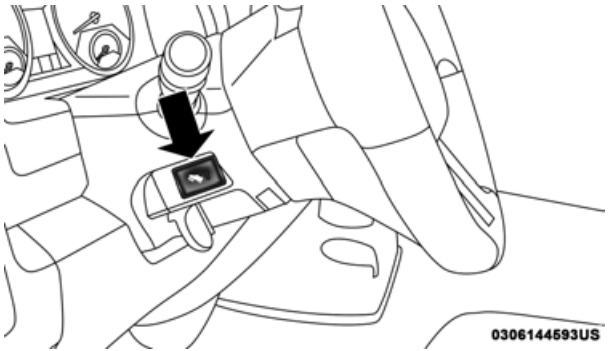

Adjustable Pedals Switch

- The pedals can be adjusted with the ignition OFF.
- The pedals **cannot** be adjusted when the vehicle is in REVERSE or when the Speed Control System is on. The following messages will appear on vehicles equipped with an instrument cluster display if the pedals are attempted to be adjusted when the system is locked out: "Adjustable Pedal Disabled — Cruise Control Engaged" or "Adjustable Pedal Disabled — Vehicle In Reverse".

NOTE:

- Always adjust the pedals to a position that allows full pedal travel.
- Further small adjustments may be necessary to find the best possible seat/pedal position.

- For vehicles equipped with Driver Memory Seat, you can use your remote keyless entry key fob or the memory switch on the driver's door trim panel to return the adjustable pedals to pre-programmed positions. Refer to "Driver Memory Seat" in "Getting To Know Your Vehicle" for further information.

WARNING!
Do not adjust the pedals while the vehicle is moving. You could lose control and have an accident. Always adjust the pedals while the vehicle is parked.

CAUTION!
Do not place any article under the adjustable pedals or impede its ability to move, as it may cause damage to the pedal controls. Pedal travel may become limited if movement is stopped by an obstruction in the adjustable pedal's path.

MIRRORS

Inside Day/Night Mirror — If Equipped

The mirror head can be adjusted up, down, left, and right for various drivers. The mirror should be adjusted to center on the view through the rear window.

Headlight glare from vehicles behind you can be reduced by moving the small control under the mirror to the night position (toward the rear of the vehicle). The mirror should be adjusted while set in the day position (toward the windshield).

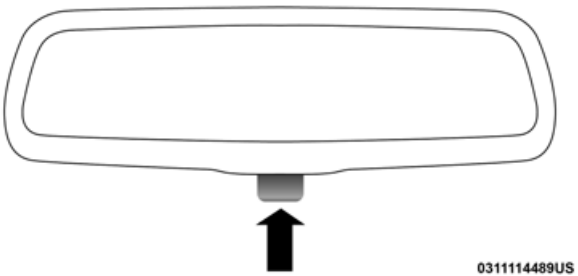

Adjusting Rearview Mirror

Automatic Dimming Mirror — If Equipped

The mirror head can be adjusted up, down, left, and right for various drivers. The mirror should be adjusted to center on the view through the rear window.

This mirror automatically adjusts for headlight glare from vehicles behind you.

NOTE:
The Automatic Dimming feature is disabled when the vehicle is in REVERSE to improve rear view viewing.

The Automatic Dimming feature can be turned on or off through the touchscreen.

- Press the mirror dimmer button once to turn the feature on.
- Press the mirror dimmer button a second time to turn the feature off.

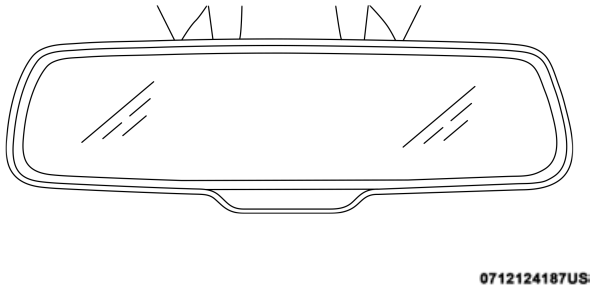

Automatic Dimming Mirror

CAUTION!
To avoid damage to the mirror during cleaning, never spray any cleaning solution directly onto the mirror. Apply the solution onto a clean cloth and wipe the mirror clean.

Automatic Dimming Mirror With Rear View Camera Display — If Equipped

A single ball joint mirror is provided in the vehicle. It is a twist on mirror that has a fixed position at the windshield. The mirror installs on the windshield button with a counter-clockwise rotation and requires no tools for mounting. The mirror head can be adjusted up, down, left, and right for various drivers. The mirror should be adjusted to center on the view through the rear window.

This mirror automatically adjusts for headlight glare from vehicles behind you.

When the vehicle is placed into reverse gear, a video display illuminates to display the image generated by the rear view camera located on the tailgate handle. The auto dimming feature is also disabled to improve rear view viewing.

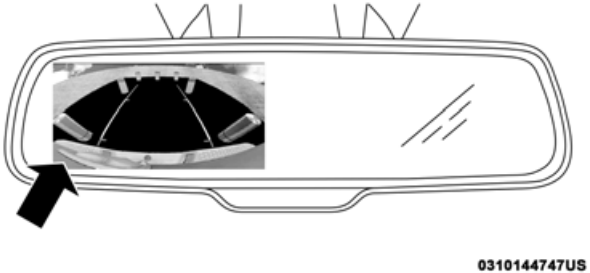

Automatic Dimming Mirror With Rear View Camera

Outside Mirrors

To receive maximum benefit, adjust the outside mirrors to center on the adjacent lane of traffic with a slight overlap of the view obtained on the inside mirror.

NOTE:
If your vehicle is equipped with puddle lamps under the outside mirrors, they can be turned off through the Uconnect display. For further information, refer to “Uconnect Settings” in “Multimedia”.

WARNING!

Vehicles and other objects seen in the passenger side convex mirror will look smaller and farther away than they really are. Relying too much on your passenger side convex mirror could cause you to collide with another vehicle or other object. Use your inside mirror when judging the size or distance of a vehicle seen in the passenger side convex mirror. Some vehicles will not have a convex passenger side mirror.

Driver's Outside Automatic Dimming Mirror — If Equipped

The driver's outside mirror will automatically adjust for glare from vehicles behind you. This feature is controlled by the inside automatic dimming mirror and will automatically adjust for headlight glare when the inside mirror adjusts.

Power Mirrors — If Equipped

The controls for the power mirrors are located on the driver's door trim panel.

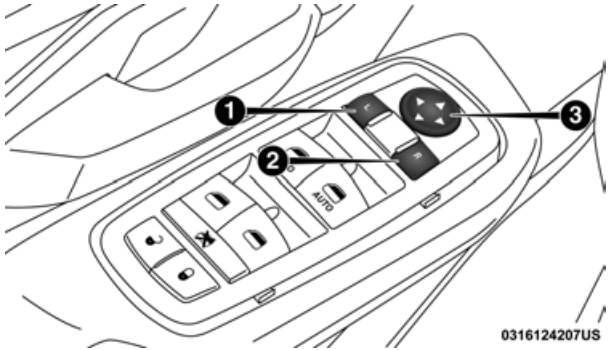

Power Mirror Controls

1 — Left Mirror Selection
2 — Right Mirror Selection
3 — Mirror Direction Control

The power mirror controls consist of mirror select buttons and a four-way mirror control switch.

To adjust a mirror, push either the L (left) or R (right) button to select the mirror that you want to adjust.

Using the mirror control switch, push on any of the four arrows for the direction that you want the mirror to move.

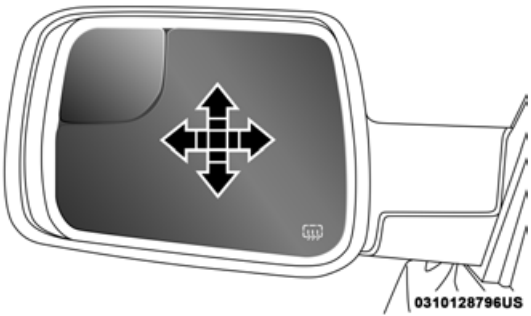

Power Mirror Movement

Power Convex Mirror Switch — If Equipped

The Power Convex Mirror Switch is located on the door trim panel, above the power mirror controls. The switch enables the movement of the convex portion of both the driver and passenger outside mirrors.

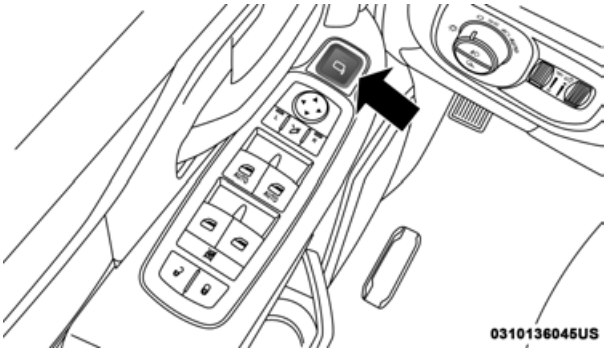

Power Convex Mirror Switch

To adjust the convex portion of the outside mirrors, push the Power Convex Mirror Switch. Then, select the mirror you want to adjust by using the L (left) or R (right) buttons.

To return the control to the large mirror, push the Power Convex Mirror Switch a second time.

Trailer Tow Power Convex Mirror

NOTE:
If the Power Convex Mirror Switch is not pushed a second time, the switch will automatically default back to the larger portion of the outside mirrors after a period of time.

Trailer Towing Mirrors — If Equipped

These mirrors are designed with an adjustable mirror head to provide a greater vision range when towing extra-wide loads. To change position inboard or outboard, the mirror head should be rotated (flipped in or out).

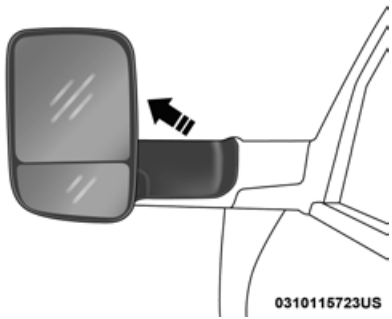

Trailer Towing Position

NOTE:
Fold the trailer towing mirrors rearward prior to entering an automated car wash.

A small blindspot mirror is located next to main mirror and can be adjusted separately.

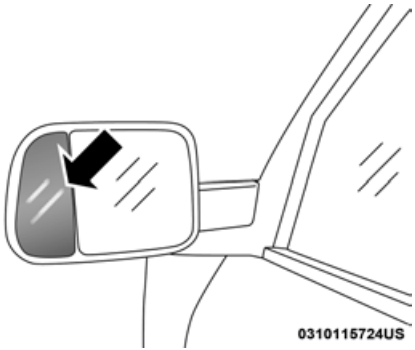

Blindspot Mirror

Heated Mirrors — If Equipped

These mirrors are heated to melt frost or ice. This feature will be activated whenever you turn on the rear window defroster (if equipped).

Refer to "Climate Controls" in this section for further information.

Tilt Side Mirrors In Reverse — If Equipped

Tilt Side Mirrors In Reverse provides automatic outside mirror positioning which will aid the driver's view of the ground rearward of the front doors. The outside mirrors will move slightly downward from the present position when the vehicle is shifted into REVERSE. The outside mirrors will then return to the original position when the vehicle is shifted out of the REVERSE position. Each stored memory setting will have an associated Tilt Side Mirrors In Reverse position.

NOTE:
The Tilt Side Mirrors In Reverse feature is not turned on when delivered from the factory.

This feature can be programmed through the Uconnect system. Refer to "Uconnect Settings" in "Multimedia" for further information.

Power Folding Outside Mirrors For Standard And Trailer Tow — If Equipped

If equipped with power folding mirrors, they can be electrically folded rearward and unfolded into the drive position.

The switch for the power folding mirrors is located between the power mirror switches L (left) and R (right). Push the switch once and the mirrors will fold in, push the switch a second time and the mirrors will return to the normal driving position.

If the mirror is manually folded after electrically cycled, a potential extra button push is required to get the mirrors back to the home position. If the mirror does not electrically fold, check for ice or dirt build up at the pivot area which can cause excessive drag.

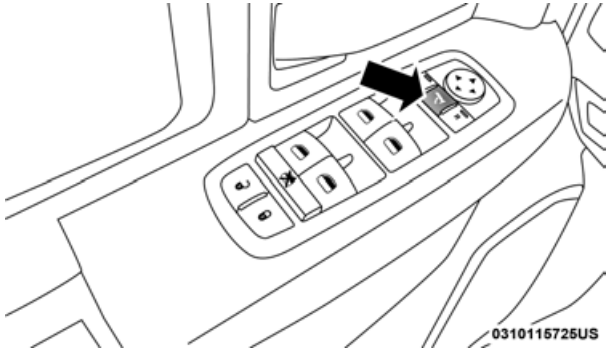

Power Folding Mirror Switch

Resetting The Power Folding Outside Mirrors

You may need to reset the power folding mirrors if the following occurs:

- The mirrors are accidentally blocked while folding.
- The mirrors are accidentally manually folded/unfolded.
- The mirrors come out of the unfolded position.
- The mirrors shake and vibrate at normal driving speeds.

To Reset The Power Folding Mirrors:

1. Using the power folding mirror switch, move the mirror to its normal driving (home) position.
2. Using the power folding mirror switch, move the mirror to the full retract position (this may require multiple button pushes). This resets them to their normal position.

NOTE:

- The power fold mirrors are designed to operate while the vehicle is stationary or traveling at moderate speeds. If you attempt to power fold the mirrors at high speeds they may not fully open or close. You should slow down to a moderate speed and complete the operation.
- When pushing the power fold button 10 or more times in one minute the system shuts down for one minute to protect the motors from over heating.

Outside Mirrors Folding Feature

All outside mirrors are designed to be able to be manually folded both forward and rearward to prevent damage.

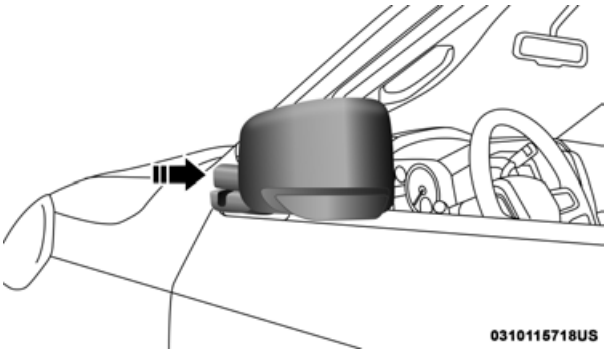

Folding Mirror

CAUTION!
It is recommended to fold the mirrors into the full rearward position to resist damage when entering a car wash or a narrow location.

Illuminated Vanity Mirror — If Equipped

Illuminated vanity mirrors are located on each sun visor. To use the mirror, rotate the sun visor down and swing the mirror cover upward. The lights will turn on automatically. Closing the mirror cover turns off the light.

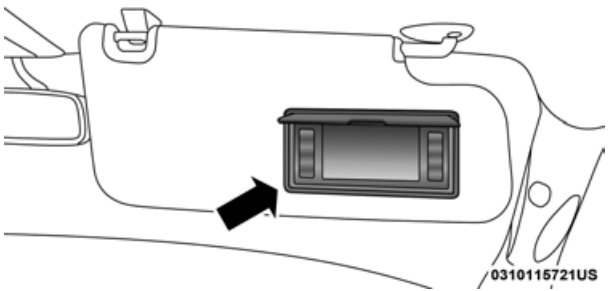

Illuminated Vanity Mirror

"Slide-On-Rod" Features Of Sun Visor — If Equipped

The sun visor "Slide-On-Rod" feature allows for additional flexibility in positioning the visor to block out the sun.

To use the "Slide-On-Rod" feature, rotate the sun visor downward and unclip it. Pull the sun visor along the "Slide-On-Rod" until the sun visor is in the desired position.

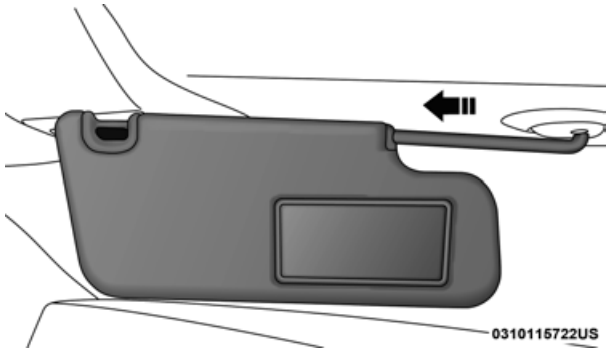

"Slide-On-Rod" Extender

EXTERIOR LIGHTS

Multifunction Lever

The multifunction lever is located on the left side of the steering column.

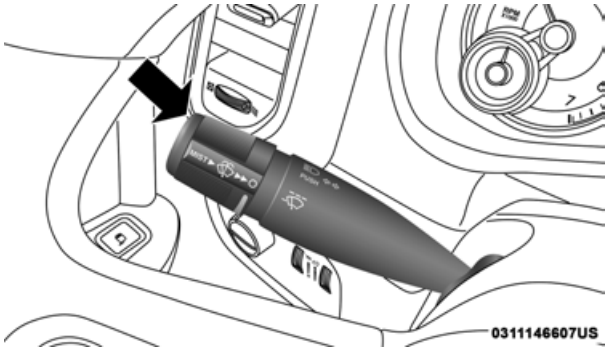

Multifunction Lever

Headlight Switch

The headlight switch is located on the left side of the instrument panel. This switch controls the operation of the headlights, parking lights, automatic headlights — if equipped, instrument panel light dimming, cargo light — if equipped, and fog lights — if equipped.

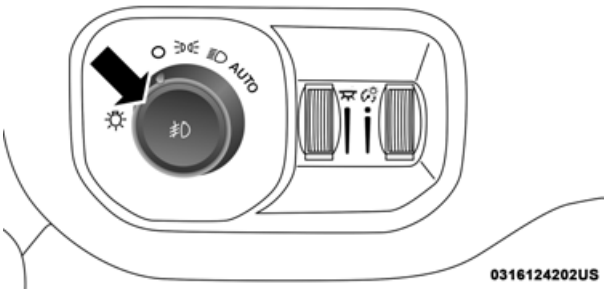

Headlight Switch

Rotate the headlight switch clockwise to the first detent for parking light and instrument panel light operation. Rotate the headlight switch to the second detent for headlight, parking light, and instrument panel light operation.

Daytime Running Lights (DRL) — If Equipped

The headlights on your vehicle will illuminate when the engine is started and the transmission is in any gear except PARK. This provides a constant "lights on" condition until the ignition is turned OFF. The lights illuminate at less than half of normal intensity. If the parking brake is applied, the Daytime Running Lights (DRL) will turn off. Also, if a turn signal is activated, the DRL lamp on the same side of the vehicle may turn off for the duration of the turn signal activation. Once the turn signal is no longer active, the DRL lamp will illuminate.

NOTE:
If allowed by law in the country in which the vehicle was purchased, the Daytime Running Lights can be turned on and off using the Uconnect System, refer to “Uconnect Settings” in “Multimedia” for further information.

High/Low Beam Switch

Push the multifunction lever toward the instrument panel to switch the headlights to high beam. Pulling the multifunction lever back toward the steering wheel will turn the low beams back on, or shut the high beams off.

Automatic High Beam Headlamp Control — If Equipped

The Automatic High Beam Headlamp Control system provides increased forward lighting at night by automating high beam control through the use of a digital camera mounted on the inside rearview mirror. This camera detects vehicle specific light and automatically switches from high beams to low beams until the approaching vehicle is out of view.

NOTE:

- The Automatic High Beam Headlamp Control can be turned on or off by selecting “ON” under “Auto Dim High Beams” within your Uconnect settings, as well as turning the headlight switch to the AUTO position. Refer to “Uconnect Settings” in “Multimedia” for further information.
- Broken, muddy, or obstructed headlights and taillights of vehicles in the field of view will cause headlights to remain on longer (closer to the vehicle). Also, dirt, film, and other obstructions on the windshield or camera lens will cause the system to function improperly.

If the windshield or Automatic High Beam Headlamp Control mirror is replaced, the mirror must be re-aimed to ensure proper performance. See a local authorized dealer.

To Activate

1. The Automatic High Beams are enabled through the Uconnect system. Refer to "Uconnect Settings" in "Multimedia" for further information.
2. Turn the headlight switch to the AUTO headlight position.
3. Push the multifunction lever away from you (toward front of vehicle) to engage the high beam mode.

NOTE:
The Automatic High Beams will not activate until the vehicle is at or above 12 mph (20 km/h).

To Deactivate

1. Pull the multifunction lever toward you (or rearward in vehicle) to manually deactivate the system (normal operation of low beams).
2. Push back on the multifunction lever to reactivate the system.

The Automatic High Beams can also be deactivated through the Uconnect system. Refer to "Uconnect Settings" in "Multimedia" for further information.

Flash-To-Pass

You can signal another vehicle with your headlights by lightly pulling the multifunction lever toward you. This will cause the high beam headlights to turn on, and remain on, until the lever is released.

Automatic Headlights — If Equipped

This system automatically turns your headlights on or off based on ambient light levels. To turn the system on, turn the headlight switch to the extreme clockwise position aligning the indicator with the AUTO on the headlight switch. When the system is on, the Headlight Time Delay feature is also on. This means your headlights will stay on for up to 90 seconds after you turn the ignition switch OFF. To turn the Automatic System off, turn the headlight switch counterclockwise to the O (off) position.

NOTE:
The engine must be running before the headlights will come on in the Automatic mode.

Parking Lights And Panel Lights

To turn on the parking lights and instrument panel lights, from the O (off) position, rotate the headlight switch clockwise to the first detent. To turn off the parking lights, rotate the headlight switch back to the O (off) position.

Headlights On With Wipers (Available With Automatic Headlights Only)

When this feature is active, the headlights will turn on approximately 10 seconds after the wipers are turned on if the headlight switch is placed in the AUTO position. In addition, the headlights will turn off when the wipers are turned off, if they were turned on by this feature.

NOTE:
This feature can be programmed through the Uconnect system. Refer to "Uconnect Settings" in "Multimedia" for further information.

Headlight Delay

To aid in your exit, your vehicle is equipped with a headlight delay that will leave the headlights on for approximately up to 90 seconds. This delay is initiated when the ignition is turned off while the headlight switch is on, and then the headlight switch is cycled off. Headlight delay can be canceled by either turning the headlight switch on then off, or by turning the ignition to the ON/RUN position.

NOTE:
This feature can be programmed through the Uconnect system. Refer to "Uconnect Settings" in "Multimedia" for further information.

Lights-On Reminder

If the headlights, parking lights, or cargo lights are left on after the ignition is turned OFF, a chime will sound when the driver's door is opened.

Front Fog Lights — If Equipped

To activate the front fog lights, turn on the parking lights or low beam headlights and push in the center of the headlight switch control knob. Pushing the headlight switch control knob a second time will turn the front fog lights off.

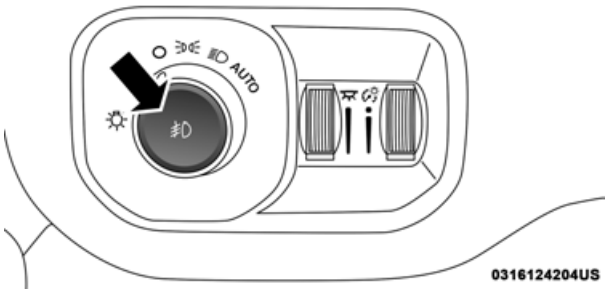

Front Fog Light Switch

Turn Signals

Move the multifunction lever up or down and the arrows on each side of the instrument cluster display will flash to show proper operation of the front and rear turn signal lights.

NOTE:
If either light remains on and does not flash, or there is a very fast flash rate, check for a defective outside light bulb. If an indicator fails to light when the lever is moved, it would suggest that the indicator bulb is defective.

Lane Change Assist — If Equipped

Tap the multifunction lever up or down once, without moving beyond the detent, and the turn signal (right or left) will flash three times then automatically turn off.

Cargo Light With Bed Lights — If Equipped

The cargo light and bed lights (if equipped) and trailer spotter lamps (if equipped) are turned on by pushing the cargo lights button located on the lower half of the headlight switch.

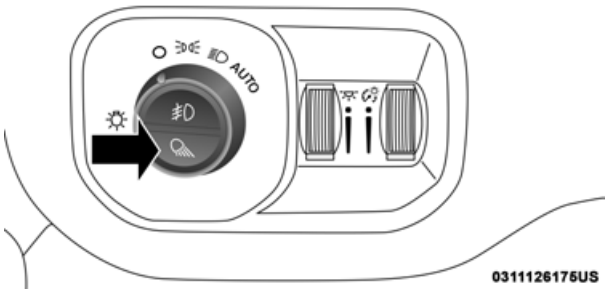

Cargo/Bed Lights Button On Headlight Switch

If the vehicle's speed is 0 mph (0 km/h), these lights can also be turned on using the switch located just inside the pickup box, on the lower part of the bed light lens. A telltale will illuminate in the instrument cluster display when these lights are on. Pushing the switch a second time will turn the lights off.

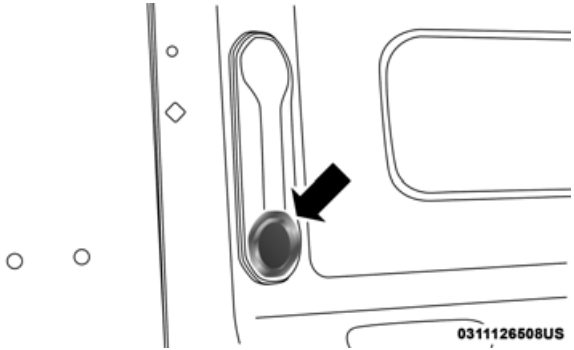

Bed Light Switch In Truck Bed

The cargo light and bed lights (if equipped) will turn on for approximately 30 seconds when a key fob unlock button is pushed, as part of the Illuminated Entry feature.

NOTE:
For vehicles shipped to or sold in the states of California or Mississippi, the Cargo, Bed, and Mirror Spotter lights will not work while the vehicle is in motion. In every other state, the Cargo and Mirror Spotter lights will turn off when the vehicle is in motion, but the Bed Light will remain on. In all states, including California and Mississippi, if a bed camera is deactivated, the Bed Lights will turn back on.

Battery Saver

To protect the life of your vehicle's battery, load shedding is provided for both the interior and exterior lights.

If the ignition is OFF, the interior lights will automatically turn off when:

- Any door is left ajar for 10 minutes.
- The Dome Defeat button is pushed.
- The Cargo, Bed, and Spotter lights are manually activated by either the headlight switch or the truck bed switch.

NOTE:
Battery saver mode is canceled if the ignition is ON.

If the headlights remain on while the ignition is cycled OFF, the exterior lights will automatically turn off after eight minutes. If the headlights are turned on and left on for eight minutes while the ignition is OFF, the exterior lights will automatically turn off.

INTERIOR LIGHTS

Courtesy Lights

The Courtesy, Dome, Cargo, and Bed Lights are turned on when any door is opened or the Dome On button is pushed on the overhead console. Also, if your vehicle is equipped with Remote Keyless Entry, and the unlock button is pushed on the key fob, the Courtesy, Dome, Cargo, and Bed Lights will turn on.

Courtesy/Reading Lights

The overhead console lights can also be operated individually as reading lights by pushing the corresponding buttons.

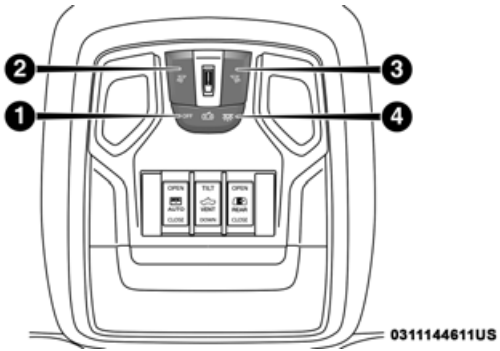

Front Courtesy/Reading Lights

1 — Dome Defeat Button
2 — Driver's Reading Light On/Off Button
3 — Passenger's Reading Light On/Off Button
4 — Dome On Button

NOTE:
On vehicles equipped with an LED overhead console, if both the Dome On and Dome Defeat buttons are pushed, the Illuminated Entry with door ajar feature will be disabled, but the Dome Lights inside the vehicle will turn on.

Two types of Rear Courtesy/Reading Lights are available for your vehicle:

- Push button on/off
- Push lens on/off

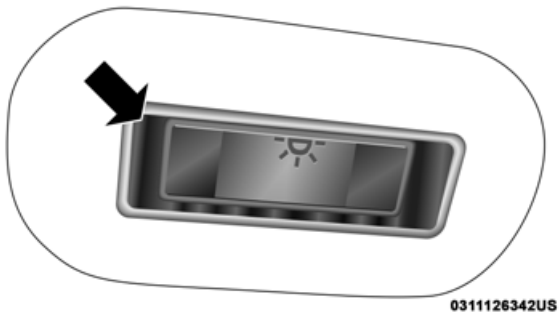

Push Lens On/Off Rear Courtesy Light

NOTE:
The Rear Courtesy/Reading Lights will remain on until the switch is pushed a second time, so be sure they have been turned off before exiting the vehicle. If the interior lights are left on after the ignition is turned off, they will automatically turn off after 10 minutes.

Dimmer Control

The dimmer controls are part of the headlight switch and are located on the left side of the instrument panel.

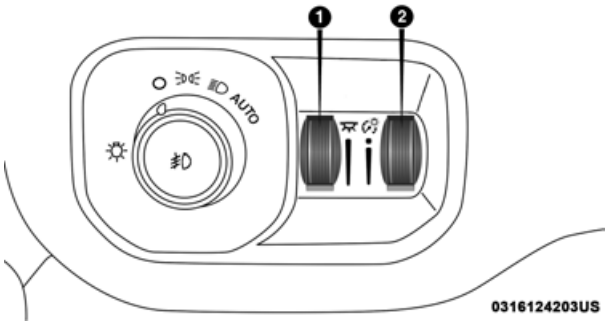

Dimmer Controls
1 — Ambient Light Control
2 — Instrument Panel Dimmer Control

With the parking lights or headlights on, rotating the right dimmer control upward will increase the brightness of the instrument panel lights. Rotating the left dimmer control will adjust the interior and ambient light levels.

NOTE:

- The dimming of the touchscreen is programmable through the Uconnect system. Refer to “Uconnect Settings” in “Multimedia” for further details.
- The ambient lights are only active when the headlights or parking lights are on.

Illuminated Entry

The courtesy lights will turn on when you use the key fob to unlock the doors or open any door.

This feature also turns on the puddle lamps located beneath the outside mirrors (if equipped).

The lights will fade to off after approximately 30 seconds, or they will immediately fade to off once the ignition switch is turned to ON/RUN from the OFF position.

The front courtesy overhead console and door courtesy lights will not turn off if the Dome On button on the overhead console is pushed.

The illuminated entry system will not operate if the Dome Defeat button on the overhead console is pushed.

NOTE:
If your vehicle is equipped with Illuminated Approach lights under the outside mirrors, they can also be turned off by pushing the Dome Defeat button.

WINDSHIELD WIPERS AND WASHERS

Windshield Wipers

The wipers and washers are operated by a switch in the multifunction lever. Turn the end of the lever to select the desired wiper speed.

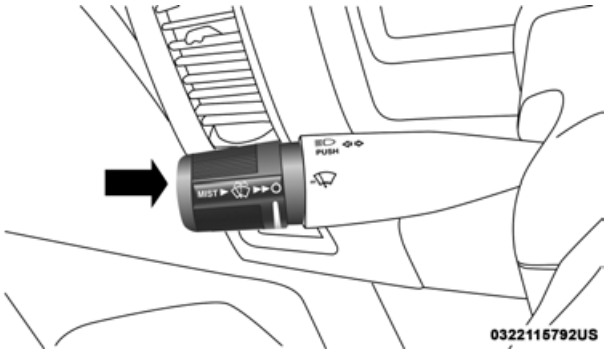

Windshield Wiper/Washer Switch

Rotate the end of the lever upward, to the first detent past the intermittent settings for low-speed wiper operation. Rotate the end of the lever upward to the second detent past the intermittent settings for high-speed wiper operation.

Intermittent Wiper System

The intermittent feature of this system was designed for use when weather conditions make a single wiping cycle, with a variable pause between cycles, desirable. For maximum delay between cycles, rotate the control knob upward to the first detent.

The delay interval decreases as you rotate the knob until it enters the low continual speed position. The delay can be regulated from a maximum of about 18 seconds between cycles, to a cycle every one second. The delay intervals will double in duration when the vehicle speed is 10 mph (16 km/h) or less.

Windshield Washers

To use the windshield washer, push the washer knob, located on the end of the multifunction lever, inward to the second detent. Washer fluid will be sprayed and the wiper will operate for two to three cycles after the washer knob is released from this position.

If the washer knob is depressed while in the delay range, the wiper will operate for several seconds after the washer knob is released. It will then resume the intermittent interval previously selected. If the washer knob is pushed while in the off position, the wiper will turn on and cycle approximately three times after the wash knob is released.

To prevent freeze-up of your windshield washer system in cold weather, select a solution or mixture that meets or exceeds the temperature range of your climate. This rating information can be found on most washer fluid containers.

WARNING!
Sudden loss of visibility through the windshield could lead to a collision. You might not see other vehicles or other obstacles. To avoid sudden icing of the windshield during freezing weather, warm the windshield with the defroster before and during windshield washer use.

Mist Feature

When a single wipe to clear off road mist or spray from a passing vehicle is needed, push the washer knob, located on the end of the multifunction lever, inward to the first detent and release. The wipers will cycle one time and automatically shut off.

NOTE:
The mist feature does not activate the washer pump; therefore, no washer fluid will be sprayed on the windshield. The wash function must be used in order to spray the windshield with washer fluid.

Rain Sensing Wipers — If Equipped

This feature senses moisture on the windshield and automatically activates the wipers for the driver. The feature is especially useful for road splash or overspray from the windshield washers of the vehicle ahead. Rotate the end of the multifunction lever to one of five settings to activate this feature.

NOTE:
This feature can be programmed through the Uconnect system. Refer to "Uconnect Settings" in "Multimedia" for further information.

The sensitivity of the system can be adjusted with the multifunction lever. Wiper delay position 1 is the least sensitive, and wiper delay position 5 is the most sensitive. Position 3 should be used for normal rain conditions. Positions 1 and 2 can be used if the driver desires less wiper sensitivity. Positions 4 and 5 can be used if the driver desires more sensitivity. Place the wiper switch in the O (off) position when not using the system.

NOTE:

- The Rain Sensing feature will not operate when the wiper switch is in the low or high-speed position.
- The Rain Sensing feature may not function properly when ice, or dried salt water is present on the windshield.
- Use of Rain-X or products containing wax or silicone may reduce Rain Sensing performance.

The Rain Sensing system has protection features for the wiper blades and arms, and will not operate under the following conditions:

- **Low Ambient Temperature** — When the ignition is first turned ON, the Rain Sensing system will not operate until the wiper switch is moved, vehicle speed is greater than 0 mph (0 km/h), or the outside temperature is greater than 32°F (0°C).

- **Transmission In NEUTRAL Position** — When the ignition is ON, and the transmission is in the NEUTRAL position, the Rain Sensing system will not operate until the wiper switch is moved, vehicle speed is greater than 5 mph (8 km/h), or the gear selector is moved out of the NEUTRAL position.
- **Remote Start Mode Inhibit** — On vehicles equipped with Remote Starting system, Rain Sensing wipers are not operational when the vehicle is in the remote start mode. Once the operator is in the vehicle and has placed the ignition switch in the RUN position, Rain Sensing wiper operation can resume, if it has been selected, and no other inhibit conditions (mentioned previously) exist.

CLIMATE CONTROLS

The Climate Control System allows you to regulate the temperature, air flow, and direction of air circulating throughout the vehicle. The controls are located on the touchscreen (if equipped), on the sides of the touchscreen, or on the instrument panel below the radio.

Climate Controls Without A Touchscreen Overview

The controls for the manual heating and air conditioning system in this vehicle consist of a series of outer rotary dials and inner push knobs. These comfort controls can be set to obtain desired interior conditions.

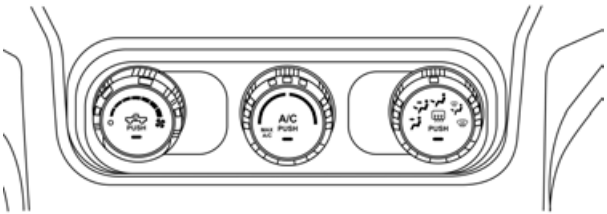

0313127377US

Manual Climate Controls

Manual Climate Control Descriptions

Icon	Description
MAX A/C	**MAX A/C Setting** Rotate the temperature control knob until it is set to MAX A/C. This is the coldest setting and puts the A/C to maximum power.
	A/C Button Push the A/C button to engage the Air Conditioning (A/C). A LED will illuminate when the A/C system is engaged.
	Recirculation Button Press and release this button on the touchscreen, or push the button on the faceplate, to change the system between recirculation mode and outside air mode. Recirculation can be used when outside conditions, such as smoke, odors, dust, or humidity are present. Recirculation can be used in all modes except for Defrost. Recirculation may be unavailable if conditions exist that could create fogging on the inside of the windshield. The A/C can be deselected manually without disturbing the mode control selection. Continuous use of the Recirculation mode may make the inside air stuffy and window fogging may occur. Extended use of this mode is not recommended.
	Temperature Control Use this control knob to regulate the temperature of the air inside the passenger compartment. Rotating the knob counterclockwise, from top center into the blue area of the scale, indicates cooler temperatures. Rotating the knob clockwise, into the red area, indicates warmer temperatures.
	Blower Control There are seven blower speeds. Use this control knob to regulate the amount of air forced through the system in any mode you select. The blower speed increases as you move the control clockwise from the off position.

Icon	Description
	Mode Control Rotate the Mode Control Knob to change the airflow distribution mode. The airflow distribution mode can be adjusted so air comes from the instrument panel outlets, floor outlets, defrost outlets and demist outlets. The Mode settings are as follows:
Panel Mode 	**Panel Mode** Air comes from the outlets in the instrument panel. Each of these outlets can be individually adjusted to direct the flow of air. The air vanes of the center outlets and outboard outlets can be moved up and down or side to side to regulate airflow direction. There is a shut off wheel located below the air vanes to shut off or adjust the amount of airflow from these outlets.
Bi-Level Mode 	**Bi-Level Mode** Air comes from the instrument panel outlets and floor outlets. A slight amount of air is directed through the defrost and side window demister outlets. **NOTE:** Bi-Level mode is designed under comfort conditions to provide cooler air out of the panel outlets and warmer air from the floor outlets.
Floor Mode 	**Floor Mode** Air comes from the floor outlets. A slight amount of air is directed through the defrost and side window demister outlets.

Icon	Description
Mix Mode	**Mix Mode** Air is directed through the floor, defrost, and side window demister outlets. This setting works best in cold or snowy conditions that require extra heat to the windshield. This setting is good for maintaining comfort while reducing moisture on the windshield.
FRONT	**Front Defrost Setting** Turn the Mode Control knob to the Defrost mode. Air comes from the windshield and side window demist outlets. Use Defrost mode with maximum temperature settings for best windshield and side window defrosting and defogging.
REAR	**Rear Defrost Button** Push and release the button on the touchscreen, or push and release the button on the faceplate, to turn on the rear window defroster and the heated outside mirrors (if equipped). An indicator illuminates when the rear window defroster is on. The rear window defroster turns off after a short period of time.

Economy Mode

If ECONOMY mode is desired, push the A/C button to turn off the LED indicator and the A/C compressor. Rotate the temperature control knob to the desired temperature. Also, make sure to select only Panel, Bi-Level or Floor modes.

Climate Controls With A Touchscreen Overview

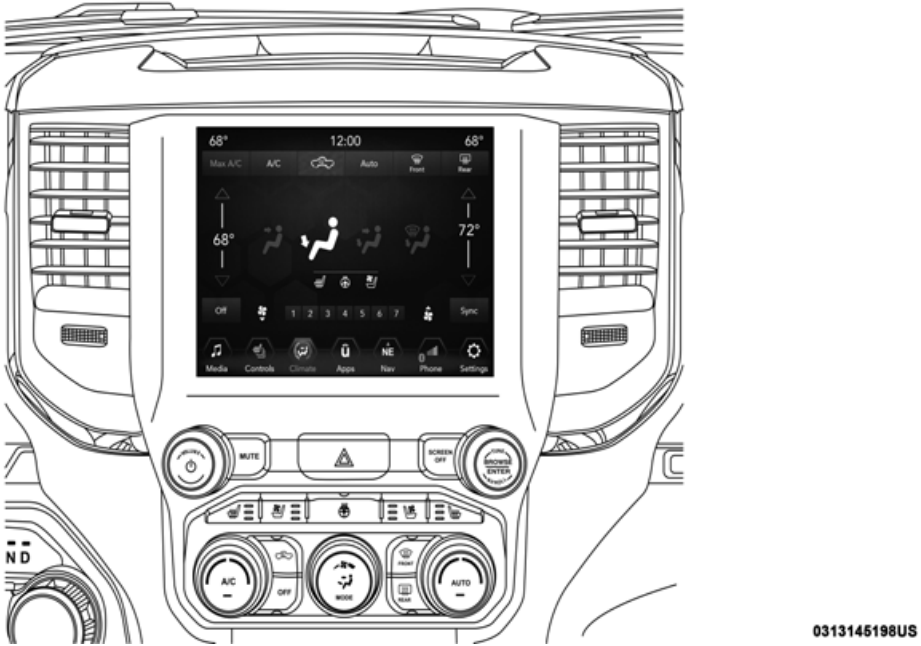

Uconnect 4/4C/4C NAV With 8.4–inch Display Automatic Temperature Controls

Uconnect 4C NAV With 12–inch Display Automatic Temperature Controls

Control Descriptions

NOTE:
Icons and descriptions can vary based upon vehicle equipment.

Icon	Description
MAX A/C	**MAX A/C** Press and release to change the current setting, the indicator illuminates when MAX A/C is on. Performing this function again will cause the MAX A/C operation to switch into manual mode and the MAX A/C indicator will turn off. **NOTE:**The MAX A/C button is only available on the touchscreen.
A/C Control Knob **A/C Button** **A/C**	**A/C Button** Press and release the button on the touchscreen, or push and release the button on the faceplate, to change the current setting, the indicator illuminates when A/C is on.
	Recirculation Button Press and release this button to change the system between recirculation mode and outside air mode. Recirculation can be used when outside conditions such as smoke, odors, dust, or high humidity are present. Recirculation can be used in all modes. Recirculation may be unavailable (button on the touchscreen greyed out) if conditions exist that could create fogging on the inside of the windshield. The A/C can be deselected manually without disturbing the mode control selection. Continuous use of the Recirculation mode may make the inside air stuffy and window fogging may occur. Extended use of this mode is not recommended.

Icon	Description
AUTO Control Knob **AUTO Button** AUTO	**AUTO** Automatically controls the interior cabin temperature by adjusting airflow distribution and amount. Toggling this function will cause the system to switch between manual mode and automatic modes. Refer to "Automatic Operation" within this section for more information.
 FRONT	**Front Defrost Button** Press and release the touchscreen button, or push and release the button on the faceplate, to change the current airflow setting to Defrost mode. The indicator illuminates when this feature is on. Air comes from the windshield and side window demist outlets. When the defrost button is selected, the blower level may increase. Use Defrost mode with maximum temperature settings for best windshield and side window defrosting and defogging. When toggling the front defrost mode button, the climate system will return to previous setting.
 REAR	**Rear Defrost Button** Press and release the button on the touchscreen, or push and release the button on the faceplate, to turn on the rear window defroster and the heated outside mirrors (if equipped). An indicator will illuminate when the rear window defroster is on. The rear window defroster automatically turns off after ten minutes.

Icon	Description
△ ▽	**Driver and Passenger Temperature Up and Down Buttons** Provides the driver and passenger with independent temperature control. Push the red button on the faceplate or touchscreen or press and slide the temperature bar towards the red arrow button on the touchscreen for warmer temperature settings. Push the blue button on the faceplate or touchscreen or press and slide the temperature bar towards the blue arrow button on the touchscreen for cooler temperature settings. **NOTE:** The numbers within the temperature display will only appear if the system is equipped with an automatic climate control system.
SYNC	**SYNC** Press the SYNC button on the touchscreen to toggle the SYNC feature on/off. The SYNC indicator is illuminated when this feature is enabled. SYNC is used to synchronize the passenger temperature setting with the driver temperature setting. Changing the passenger's temperature setting while in SYNC will automatically exit this feature. **NOTE:** The SYNC button is only available on the touchscreen.

Icon	Description
Blower Control Knob **Blower Control Buttons** ▲ ▼	**Blower Control** Blower Control is used to regulate the amount of air forced through the climate system. There are seven blower speeds available. Adjusting the blower will cause automatic mode to switch to manual operation. The speeds can be selected using either the blower control knob on the faceplate or the buttons on the touchscreen. • **Faceplate:** The blower speed increases as you turn the blower control knob clockwise from the lowest blower setting. The blower speed decreases as you turn the blower control knob counter-clockwise. • **Touchscreen:** Use the small blower icon to reduce the blower setting and the large blower icon to increase the blower setting. Blower can also be selected by pressing the blower bar area between the icons. **NOTE:** **On Uconnect 4C NAV With 12–inch display radios, pressing the blower control button below one turns the Climate Control system OFF.**
Mode Control Knob **Mode Controls Button**	**Modes Control** **Control Knob:** Push the Mode Control Knob to change the airflow distribution mode. The airflow distribution mode can be adjusted so air comes from the instrument panel outlets, floor outlets, defrost outlets and demist outlets. **Touchscreen:** Select Mode by pressing one of the Mode buttons on the touchscreen to change the airflow distribution mode. The airflow distribution mode can be adjusted so air comes from the instrument panel outlets, floor outlets, defrost outlets and demist outlets.

Icon	Description
Panel Mode	**Panel Mode** Air comes from the outlets in the instrument panel. Each of these outlets can be individually adjusted to direct the flow of air. The air vanes of the center outlets and outboard outlets can be moved up and down or side to side to regulate airflow direction. There is a shut off wheel located below the air vanes to shut off or adjust the amount of airflow from these outlets.
Bi-Level Mode	**Bi-Level Mode** Air comes from the instrument panel outlets and floor outlets. A slight amount of air is directed through the defrost and side window demister outlets. **NOTE:** Bi-Level mode is designed under comfort conditions to provide cooler air out of the panel outlets and warmer air from the floor outlets.
Floor Mode	**Floor Mode** Air comes from the floor outlets. A slight amount of air is directed through the defrost and side window demister outlets.
Mix Mode	**Mix Mode** Air is directed through the floor, defrost, and side window demister outlets. This setting works best in cold or snowy conditions that require extra heat to the windshield. This setting is good for maintaining comfort while reducing moisture on the windshield.
OFF	**Climate Control OFF Button** This button turns the Climate Control System off.

Climate Control Functions

A/C (Air Conditioning)

The Air Conditioning (A/C) button allows the operator to manually activate or deactivate the air conditioning system. When the air conditioning system is turned on, cool dehumidified air will flow through the outlets into the cabin. For improved fuel economy, press the A/C button to turn off the air conditioning and manually adjust the blower and airflow mode settings. Also, make sure to select only Panel, Bi-Level, or Floor modes.

NOTE:

- For Manual Climate Controls, if the system is in Mix, Floor or Defrost Mode, the A/C can be turned off, but the A/C system shall remain active to prevent fogging of the windows.
- If fog or mist appears on the windshield or side glass, select Defrost mode, and increase blower speed if needed.
- If your air conditioning performance seems lower than expected, check the front of the A/C condenser (located in front of the radiator), for an accumulation of dirt or insects. Clean with a gentle water spray from the front of the radiator and through the condenser.

MAX A/C

MAX A/C sets the control for maximum cooling performance.

Press and release to toggle between MAX A/C and the prior settings. The button illuminates when MAX A/C is on.

In MAX A/C, the blower level and mode position can be adjusted to desired user settings. Pressing other settings will cause the MAX A/C operation to switch to the selected setting and MAX A/C to exit.

Recirculation

In cold weather, use of Recirculation mode may lead to excessive window fogging. The Recirculation feature may be unavailable (button on the touchscreen greyed out) if conditions exist that could create fogging on the inside of the windshield.

On systems with Manual Climate Controls, if equipped, the Recirculation mode is not allowed in Defrost mode to improve window clearing operation. Recirculation is disabled automatically if this mode is selected. Attempting to use Recirculation while in this mode causes the LED in the control button to blink and then turns off.

Automatic Temperature Control (ATC)

Automatic Operation

1. Push the AUTO button on the faceplate, or the AUTO button on the touchscreen on the Automatic Temperature Control (ATC) Panel.
2. Next, adjust the temperature you would like the system to maintain by adjusting the driver and passenger temperature control buttons. Once the desired temperature is displayed, the system will achieve and automatically maintain that comfort level.
3. When the system is set up for your comfort level, it is not necessary to change the settings. You will experience the greatest efficiency by simply allowing the system to function automatically.

NOTE:

- It is not necessary to move the temperature settings for cold or hot vehicles. The system automatically adjusts the temperature, mode, and blower speed to provide comfort as quickly as possible.
- The temperature can be displayed in U.S. or Metric units by selecting the US/Metric customer-programmable feature. Refer to the "Uconnect Settings" in "Multimedia" for further information.

To provide you with maximum comfort in the Automatic mode during cold start-ups, the blower fan will remain on low until the engine warms up. The blower will increase in speed and transition into Auto mode.

Manual Operation Override

This system offers a full complement of manual override features. The AUTO symbol in the front ATC display will be turned off when the system is being used in the manual mode.

Operating Tips

NOTE:
Refer to the chart at the end of this section for suggested control settings for various weather conditions.

Summer Operation

The engine cooling system must be protected with a high-quality antifreeze coolant to provide proper corrosion protection and to protect against engine overheating. OAT coolant (conforming to MS.90032) is recommended.

Winter Operation

To ensure the best possible heater and defroster performance, make sure the engine cooling system is functioning properly and the proper amount, type, and concentration of coolant is used. Use of the Air Recirculation mode during Winter months is not recommended, because it may cause window fogging.

Vacation/Storage

Before you store your vehicle, or keep it out of service (i.e., vacation) for two weeks or more, run the air conditioning system at idle for about five minutes, in fresh air with the blower setting on high. This will ensure adequate system lubrication to minimize the possibility of compressor damage when the system is started again.

Window Fogging

Vehicle windows tend to fog on the inside in mild, rainy, and/or humid weather. To clear the windows, select Defrost or Mix mode and increase the front blower speed. Do not use the Recirculation mode without A/C for long periods, as fogging may occur.

CAUTION!

Failure to follow these cautions can cause damage to the heating elements:

- **Use care when washing the inside of the rear window. Do not use abrasive window cleaners on the interior surface of the window. Use a soft cloth and a mild washing solution, wiping parallel to the heating elements. Labels can be peeled off after soaking with warm water.**
- **Do not use scrapers, sharp instruments, or abrasive window cleaners on the interior surface of the window.**
- **Keep all objects a safe distance from the window.**

Outside Air Intake

Make sure the air intake, located directly in front of the windshield, is free of obstructions, such as leaves. Leaves collected in the air intake may reduce airflow, and if they enter the plenum, they could plug the water drains. In Winter months, make sure the air intake is clear of ice, slush, and snow.

Cabin Air Filter

The climate control system filters out dust and pollen from the air. Contact an authorized dealer to service your cabin air filter, and to have it replaced when needed.

Operating Tips Chart

WEATHER	CONTROL SETTINGS
Hot weather and vehicle interior is very hot	Set the mode control to , on, and blower on high. Roll down the windows for a minute to flush out the hot air. Once comfort is achieved adjust controls for comfort.
Warm weather	Turn on and set the mode control to the position.
Cool Sunny	Operate in position.
Cool & Humid conditions	Set the mode control to and turn on to keep windows clear.
Cold Weather	Set the mode control to the position. If windshield fogging starts to occur, move the control towards the position.

8000cb71

WINDOWS

Power Windows

Power Window Controls

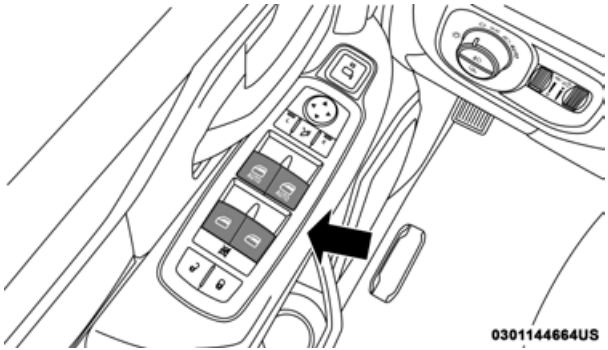

Power Window Switches

The power window controls located on the driver's door trim panel have up-down switches that give you fingertip control of all power windows. There is a single opening and closing switch on the front passenger door for passenger window control and on the rear doors for rear window control. The windows will operate when the ignition switch is turned to the ON/RUN or ACC position, and for up to 10 minutes after the ignition is turned OFF or until a front door is opened.

NOTE:
The Key Off Power Delay feature will allow the power windows to operate for up to 10 minutes after the ignition is turned OFF. This feature is cancelled when either front door is opened.

WARNING!
Never leave children unattended in a vehicle. Do not leave the key fob in or near the vehicle or in a location accessible to children, and do not leave the ignition of a vehicle equipped with Keyless Enter-N-Go in the ACC or ON/RUN mode. Occupants, particularly unattended children, can become entrapped by the windows while operating the power window switches. Such entrapment may result in serious injury or death.

Auto-Down

Both the driver and front passenger window switch have an Auto-Down feature. Push the window switch past the first detent, release, and the window will go down automatically. To cancel the Auto-Down movement, operate the switch in either the up or down direction and release the switch.

To stop the window from going all the way down during the Auto-Down operation, pull up on the switch briefly.

To open the window part way, push to the switch to the first detent and release it when you want the window to stop.

Auto-Up Feature With Anti-Pinch Protection — If Equipped

Pull the window switch fully upward to the second detent, release, and the window will go up automatically.

To stop the window from going all the way up during the Auto-Up operation, push down on the switch briefly.

To close the window part way, lift the window switch to the first detent and release when you want the window to stop.

NOTE:
If the window runs into any obstacle during the Auto-Closure, it will reverse direction and then go back down. Remove the obstacle and use the window switch again to close the window. Any impact due to rough road conditions may trigger the auto reverse function unexpectedly during auto closure. If this happens, pull the switch lightly to the first detent and hold to close the window manually.

WARNING!
There is no anti-pinch protection when the window is almost closed. Be sure to clear all objects from the window before closing.

Reset Auto-Up

Should the Auto-Up feature stop working, the window may need to be reset. To reset Auto-Up:

1. Make sure the door is fully closed.
2. Pull the window switch up to close the window completely and continue to hold the switch up for an additional two seconds after the window is closed.
3. Push the window switch down firmly to the second detent to open the window completely and continue to hold the switch down for an additional two seconds after the window is fully open.

Window Lockout Switch

The window lockout switch on the driver's door allows you to disable the window control on the rear passenger doors. To disable the window controls on the rear passenger doors, push the window lock switch into the latched or down position. To enable the window controls, push the window lock switch again and return the switch to the released or up position.

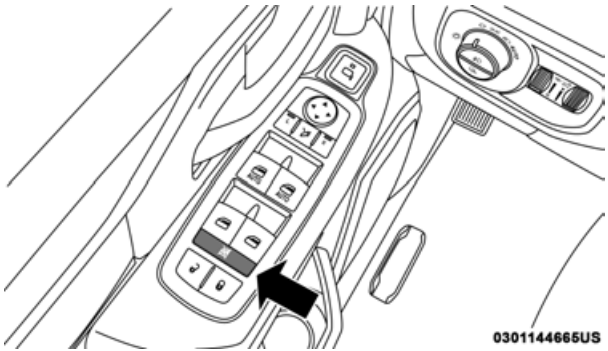

Window Lockout Switch

Power Sliding Rear Window — If Equipped

The switch for the power sliding rear window is located on the overhead console.

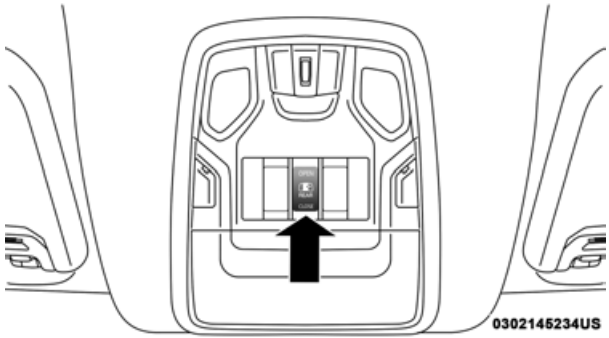

Power Sliding Rear Window Switch

Push the switch rearward to open the glass. Pull the switch forward to close the glass.

Manual Sliding Rear Window — If Equipped

A locking device in the center of the window helps to prevent entry from the rear of the vehicle. Squeeze the lock to release the window.

Wind Buffeting

Wind buffeting can be described as the perception of pressure on the ears or a helicopter-type sound in the ears. Your vehicle may exhibit wind buffeting with the windows down, or the sunroof (if equipped) in certain open or partially open positions. This is a normal occurrence and can be minimized. If the buffeting occurs with the rear windows open, open the front and rear windows together to minimize the buffeting. If the buffeting occurs with the sunroof open, adjust the sunroof opening to minimize the buffeting or open any window.

POWER SUNROOF — IF EQUIPPED

Single Pane Power Sunroof — If Equipped

The power sunroof switches are located on the overhead console between the courtesy / reading lights.

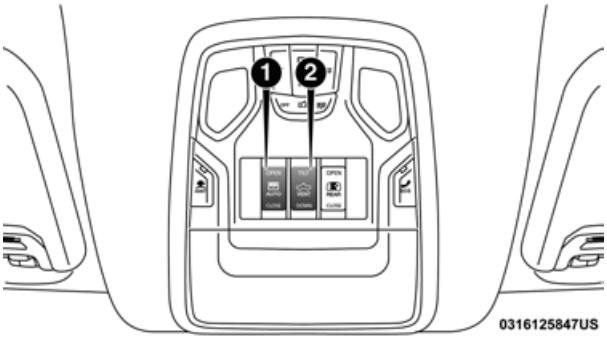

Power Sunroof Switches

1 — Opening / Closing Sunroof
2 — Venting Sunroof

WARNING!

- **Never leave children unattended in a vehicle, or with access to an unlocked vehicle. Never leave the key fob in or near the vehicle, or in a location accessible to children. Do not leave the ignition of a vehicle equipped with Keyless Enter-N-Go in the ACC or ON/RUN mode. Occupants, particularly unattended children, can become entrapped by the power sunroof while operating the power sunroof switch. Such entrapment may result in serious injury or death.**
- **In a collision, there is a greater risk of being thrown from a vehicle with an open sunroof. You could also be seriously injured or killed. Always fasten your seat belt properly and make sure all passengers are also properly secured.**
- **Do not allow small children to operate the sunroof. Never allow your fingers, other body parts, or any object, to project through the sunroof opening. Injury may result.**

Opening Sunroof

Express

Push the switch rearward and release it within one-half second. The sunroof and sunshade will open automatically and stop when the full open position is reached. This is called "Express Open." During Express Open operation, any other actuation of the sunroof switch will stop the sunroof.

Manual Mode

To open the sunroof, push and hold the switch rearward. The sunroof will move rearward and automatically stop at full open position. Any release of the switch will stop the movement. The sunroof and sunshade will remain in a partially opened condition until the sunroof switch is pushed again.

Closing Sunroof

Express

Push the switch forward and release it within one-half second and the sunroof will close automatically from any position. The sunroof will close fully and stop automatically. This is called "Express Close." During Express Close operation, any other actuation of the switch will stop the sunroof.

Manual Mode

To close the sunroof, push and hold the switch forward. The sunroof will move forward and automatically stop at full closed position. Any release of the switch will stop the movement and the sunroof will remain in a partially closed condition until the sunroof switch is pushed again.

Wind Buffeting

Wind buffeting can be described as the perception of pressure on the ears or a helicopter-type sound in the ears. Your vehicle may exhibit wind buffeting with the windows down, or the sunroof (if equipped) in certain open or partially open positions. This is a normal occurrence and can be minimized. If the buffeting occurs with the rear windows open, then open the front and rear windows together to minimize the buffeting. If the buffeting occurs with the sunroof open, adjust the sunroof opening to minimize the buffeting or open any window.

Sunshade Operation

The sunshade can be opened manually. However, the sunshade will open automatically as the sunroof opens.

NOTE:
The sunshade cannot be closed if the sunroof is open.

Pinch Protect Feature

This feature will detect an obstruction in the closing of the sunroof during the Express Close operation. If an obstruction in the path of the sunroof is detected, the sunroof will automatically retract. Remove the obstruction if this occurs.

NOTE:
If three consecutive sunroof close attempts result in Pinch Protect reversals, Pinch Protect will disable and the sunroof must be closed in Manual Mode.

Venting Sunroof — Express

Push and release the Vent button within one half second and the sunroof will open to the vent position. This is called "Express Vent", and it will occur regardless of sunroof position. During Express Vent operation, any other actuation of the switch will stop the sunroof.

Sunroof Maintenance

Use only a non-abrasive cleaner and a soft cloth to clean the glass panel.

Ignition Off Operation

The power sunroof switch will remain active for up to approximately 10 minutes after the ignition switch is turned to the OFF/LOCK position. Opening either front door will cancel this feature.

NOTE:
Ignition Off time is programmable through the Uconnect System. Refer to "Uconnect Settings" in "Multimedia" for further information.

Relearn Procedure

For vehicles equipped with a sunroof, there is a relearn procedure that allows you to calibrate the sunroof when the "Express Operation" feature stops working. To reset the sunroof, follow these steps:

1. Set the ignition to the ACC or the ON/RUN position.
2. Ensure that the sunroof is in the fully closed position.
3. Push and hold the close switch. The sunroof will hit the hard stop and move to the vent position after ten seconds.
4. Release the close switch.
5. Push and hold the close switch again within five seconds to begin the teaching process. The sunroof will complete one full cycle and return to the fully closed position.

NOTE:
If the close switch is released anytime during the teach cycle, the procedure will need to be repeated starting from the first step.

6. Once the sunroof has stopped in the fully closed position, release the close switch. The sunroof is now reset and ready to use.

HOOD

To Open The Hood

To open the hood, two latches must be released.

1. Pull the hood release lever located below the steering wheel at the base of the instrument panel.

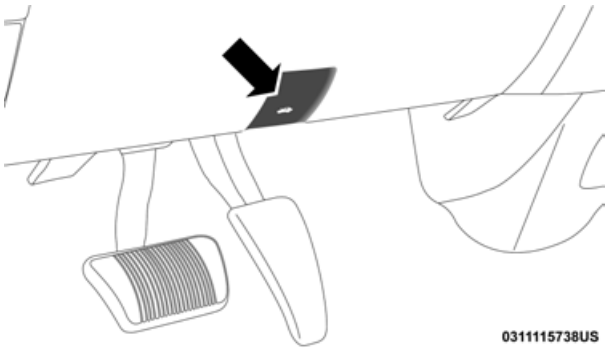

Hood Release

2. Reach into the opening beneath the center of the hood and push the safety latch lever to the left to release it, before raising the hood.

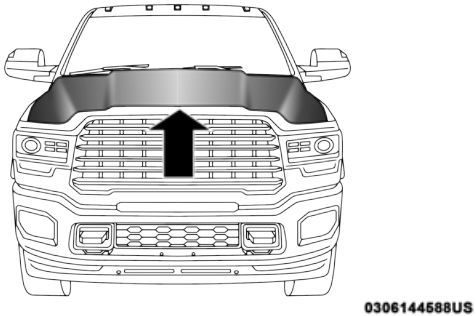

Safety Latch Location

To Close The Hood

Lower the hood to approximately 12 inches (30 cm) from the engine compartment and drop it. Make sure that the hood is completely closed.

WARNING!
Be sure the hood is fully latched before driving your vehicle. If the hood is not fully latched, it could open when the vehicle is in motion and block your vision. Failure to follow this warning could result in serious injury or death.

CAUTION!
To prevent possible damage, do not slam the hood to close it. Use a firm downward push at the front center of the hood to ensure that both latches engage.

TAILGATE

Opening

The power tailgate may be opened by pushing the tailgate release pad located on the tailgate door.

The tailgate damper strut will lower the tailgate to the open position (if equipped).

Electronic Tailgate Release — If Equipped

The key fob may be equipped with an electronic release feature for the tailgate, allowing hands-free tailgate opening. To activate, push and release the Tailgate Release button on the key fob twice within five seconds. The tailgate door will unlatch, and slowly lower into the open position.

If equipped, a button on the center overhead console inside the vehicle can be used to release the tailgate.

NOTE:
The Tri-Fold Tonneau Cover (if equipped) may prevent Electronic Tailgate Release if installed. The Tonneau Cover must be removed or folded up before releasing the tailgate. Refer to “Tri-Fold Tonneau Cover — If Equipped” in “Getting To Know Your Vehicle” for further information.

Closing

To close the tailgate, push it upward until both sides are latched.

NOTE:
Pull back on the tailgate firmly after closing to ensure it is securely latched.

Bed Step — If Equipped

Your vehicle may be equipped with an extendable bed step on the driver's side of the tailgate to provide easier entry and exit into the truck bed.

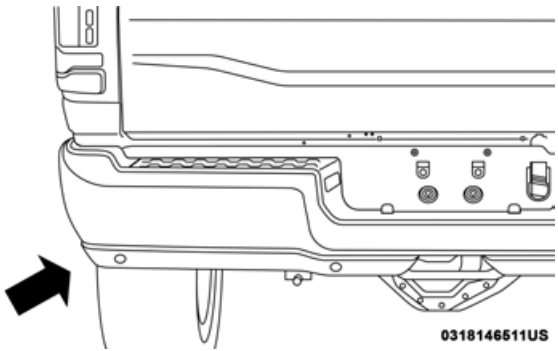

Bed Step Location

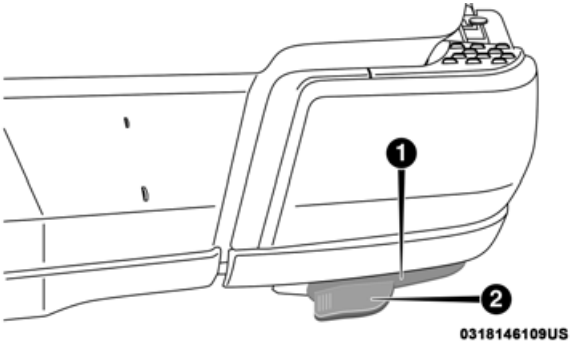

Bed Step Components

1 — Bed Step
2 — Foot Tab

To extend the bed step, place your foot on the protruding foot tab located on the left edge of the bed step, and push rearward. A small amount of force will release the spring load, and extend the bed step out and away from the tailgate.

NOTE:
Once the spring load is overcome, the bed step will extend out quickly, so be sure to stand in a position that will avoid coming into contact with the step as it extends.

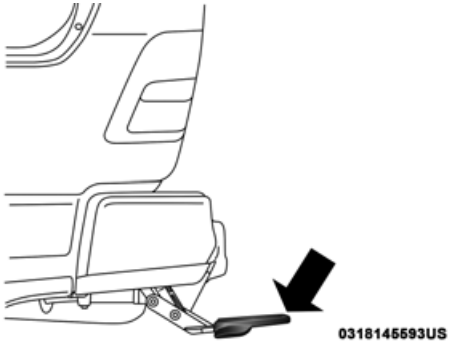

Bed Step (Extended)

To stow the bed step back under the tailgate, push the bed step forward with your foot until the bed step is retracted by the spring load.

WARNING!
Do not attempt to stow the bed step with your hands. The low clearance space between the bed step and the rear bumper as the bed step returns to the stowed position could result in injury to your hands or fingers.

GARAGE DOOR OPENER — IF EQUIPPED

HomeLink replaces up to three hand-held transmitters that operate devices such as garage door openers, motorized gates, lighting or home security systems. The HomeLink unit is powered by your vehicles 12 Volt battery.

The HomeLink buttons that are located on the sun visor designate the three different HomeLink channels.

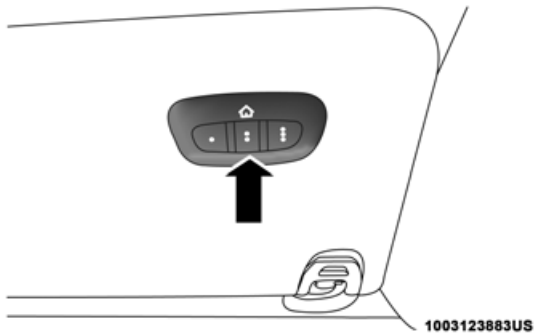

HomeLink Buttons

NOTE:
HomeLink is disabled when the Vehicle Security Alarm is active.

WARNING!

- **Your motorized door or gate will open and close while you are programming the universal transceiver. Do not program the transceiver if people, pets or other objects are in the path of the door or gate. Only use this transceiver with a garage door opener that has a "stop and reverse" feature as required by Federal safety standards. This includes most garage door opener models manufactured after 1982. Do not use a garage door opener without these safety features.**
- **Vehicle exhaust contains carbon monoxide, a dangerous gas. Do not run your vehicle in the garage while programming the transceiver. Exhaust gas can cause serious injury or death.**

NOTE:
Only use this transceiver with a garage door opener that has a "stop and reverse" feature as required by federal safety standards. This includes most garage door opener models manufactured after 1982. Do not use a garage door opener without these safety features. Call toll-free 1-800-355-3515 or, on the Internet at HomeLink.com for safety information or assistance.

Before You Begin Programming HomeLink

Be sure that your vehicle is parked outside of the garage before you begin programming.

For more efficient programming and accurate transmission of the radio-frequency signal it is recommended that a new battery be placed in the hand-held transmitter of the device that is being programmed to the HomeLink system.

To erase the channels, place the ignition in the ON/RUN position, and push and hold the two outside HomeLink buttons (I and III) for up to 20 seconds or until the orange indicator flashes.

NOTE:

- Erasing all channels should only be performed when programming HomeLink for the first time. Do not erase channels when programming additional buttons.
- If you have any problems, or require assistance, please call toll-free 1-800-355-3515 or, on the Internet at HomeLink.com for information or assistance.

Programming A Rolling Code

For programming garage door openers that were manufactured after 1995. These garage door openers can be identified by the "LEARN" or "TRAIN" button located where the hanging antenna is attached to the garage door opener.

NOTE:
It is NOT the button that is normally used to open and close the door. The name and color of the button may vary by manufacturer.

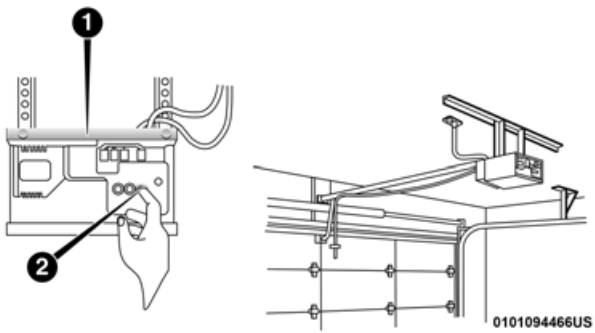

Training The Garage Door Opener
1 — Door Opener
2 — Training Button

1. Place the ignition in the ON/RUN position.
2. Place the hand-held transmitter 1 to 3 inches (3 to 8 cm) away from the HomeLink button you wish to program while keeping the HomeLink indicator light in view.
3. Push and hold the HomeLink button you want to program while you push and hold the hand-held transmitter button.
4. Continue to hold both buttons and observe the indicator light. The HomeLink indicator will flash slowly and then rapidly after HomeLink has received the frequency signal from the hand-held transmitter. Release both buttons after the indicator light changes from slow to rapid.
5. At the garage door opener motor (in the garage), locate the "LEARN" or "TRAINING" button. This can usually be found where the hanging antenna wire is attached to the garage door opener/device motor. Firmly push and release the "LEARN" or "TRAINING" button. On some garage door openers/devices there may be a light that blinks when the garage door opener/device is in the LEARN/TRAIN mode.

NOTE:
You have 30 seconds in which to initiate the next step after the LEARN button has been pushed.

6. Return to the vehicle and push the programmed HomeLink button twice (holding the button for two seconds each time). If the garage door opener/device activates, programming is complete.

NOTE:
If the garage door opener/device does not activate, push the button a third time (for two seconds) to complete the training.

To program the remaining two HomeLink buttons, repeat each step for each remaining button. DO NOT erase the channels.

Reprogramming A Single HomeLink Button (Rolling Code)

To reprogram a channel that has been previously trained, follow these steps:

1. Cycle the ignition to the ON/RUN position.
2. Push and hold the desired HomeLink button until the indicator light begins to flash after 20 seconds. Do not release the button.
3. Without releasing the button proceed with "Programming A Rolling Code" step 2 and follow all remaining steps."

Programming A Non-Rolling Code

For programming Garage Door Openers manufactured before 1995.

1. Cycle the ignition to the ON/RUN position.
2. Place the hand-held transmitter 1 to 3 inches (3 to 8 cm) away from the HomeLink button you wish to program while keeping the HomeLink indicator light in view.
3. Press and hold the HomeLink button you want to program while you press and hold the hand-held transmitter button.
4. Continue to hold both buttons and observe the indicator light. The HomeLink indicator will flash slowly and then rapidly after HomeLink has received the frequency signal from the hand-held transmitter. Release both buttons after the indicator light changes from slow to rapid.

5. Press and hold the programmed HomeLink button and observe the indicator light.

   - If the indicator light stays on constantly, programming is complete and the garage door/device should activate when the HomeLink button is pressed.
   - To program the two remaining HomeLink buttons, repeat each step for each remaining button. DO NOT erase the channels.

Reprogramming A Single HomeLink Button (Non-Rolling Code)

To reprogram a channel that has been previously trained, follow these steps:

1. Cycle the ignition to the ON/RUN position.
2. Press and hold the desired HomeLink button until the indicator light begins to flash after 20 seconds. Do not release the button.
3. Without releasing the button, proceed with "Programming A Non-Rolling Code" step 2 and follow all remaining steps.

Canadian/Gate Operator Programming

For programming transmitters in Canada/United States that require the transmitter signals to "time-out" after several seconds of transmission.

Canadian radio frequency laws require transmitter signals to time-out (or quit) after several seconds of transmission – which may not be long enough for HomeLink to pick up the signal during programming. Similar to this Canadian law, some U.S. gate operators are designed to time-out in the same manner.

It may be helpful to unplug the device during the cycling process to prevent possible overheating of the garage door or gate motor.

1. Cycle the ignition to the ON/RUN position.
2. Place the hand-held transmitter 1 to 3 inches (3 to 8 cm) away from the HomeLink button you wish to program while keeping the HomeLink indicator light in view.
3. Continue to press and hold the HomeLink button, while you press and release ("cycle") your hand-held transmitter every two seconds until HomeLink has successfully accepted the frequency signal. The indicator light will flash slowly and then rapidly when fully trained.

4. Watch for the HomeLink indicator to change flash rates. When it changes, it is programmed. It may take up to 30 seconds or longer in rare cases. The garage door may open and close while you are programming.

5. Press and hold the programmed HomeLink button and observe the indicator light.

NOTE:

- If the indicator light stays on constantly, programming is complete and the garage door/device should activate when the HomeLink button is pressed.
- To program the two remaining HomeLink buttons, repeat each step for each remaining button. DO NOT erase the channels.

If you unplugged the garage door opener/device for programming, plug it back in at this time.

Reprogramming A Single HomeLink Button (Canadian/ Gate Operator)

To reprogram a channel that has been previously trained, follow these steps:

1. Cycle the ignition to the ON/RUN position.

2. Press and hold the desired HomeLink button until the indicator light begins to flash after 20 seconds. Do not release the button.

3. Without releasing the button, proceed with “Canadian/ Gate Operator Programming” step 2 and follow all remaining steps.

Using HomeLink

To operate, push and release the programmed HomeLink button. Activation will now occur for the programmed device (i.e. garage door opener, gate operator, security system, entry door lock, home/office lighting, etc.) The hand-held transmitter of the device may also be used at any time.

Security

It is advised to erase all channels before you sell or turn in your vehicle.

To do this, push and hold the two outside buttons for 20 seconds until the orange indicator flashes. Note that all channels will be erased. Individual channels cannot be erased.

The HomeLink Universal Transceiver is disabled when the Vehicle Security Alarm is active.

Troubleshooting Tips

If you are having trouble programming HomeLink, here are some of the most common solutions:

- Replace the battery in the Garage Door Opener hand-held transmitter.
- Push the LEARN button on the Garage Door Opener to complete the training for a Rolling Code.
- Did you unplug the device for programming and remember to plug it back in?

If you have any problems, or require assistance, please call toll-free1-800-355-3515 or, on the Internet at HomeLink.com for information or assistance.

General Information

The following regulatory statement applies to all Radio Frequency (RF) devices equipped in this vehicle:

This device complies with Part 15 of the FCC Rules and with Innovation, Science and Economic Development Canada license-exempt RSS standard(s). Operation is subject to the following two conditions:

1. This device may not cause harmful interference, and
2. This device must accept any interference received, including interference that may cause undesired operation.

NOTE:
Changes or modifications not expressly approved by the party responsible for compliance could void the user's authority to operate the equipment.

INTERNAL EQUIPMENT

Storage

Glove Compartment

The glove compartment is located on the passenger side of the instrument panel and features both an upper and lower storage area.

NOTE:
Not all vehicles are equipped with a door over the upper storage area.

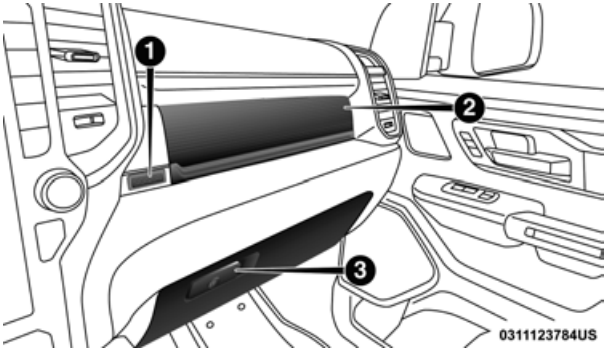

Glove Compartment

1 — Upper Glove Compartment Release Button (If Equipped)
2 — Upper Glove Compartment
3 — Lower Glove Compartment

If equipped with a covered upper glove compartment, push the release button to open.

To open the lower glove compartment, pull the release handle.

Door Storage

Front Door Storage — If Equipped

Storage areas and bottle holders (driver's side only) are located in the door trim panels.

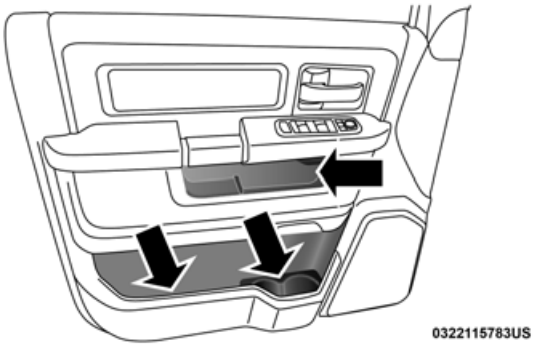

Front Door Storage

Rear Door Storage — If Equipped

Storage compartments are located in both the driver and passenger rear door trim panels.

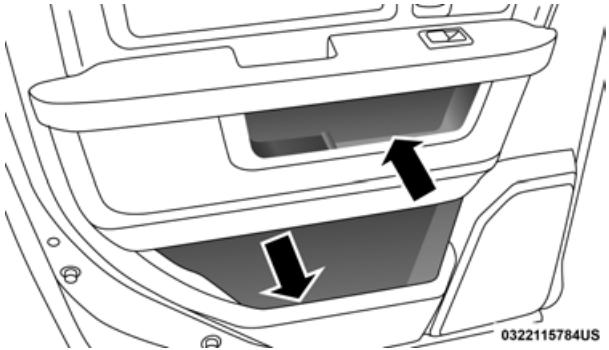

Rear Door Storage

Center Storage Compartment — If Equipped

The center storage compartment is located between the driver and passenger seats. The storage compartment provides an armrest and contains both an upper and lower storage area.

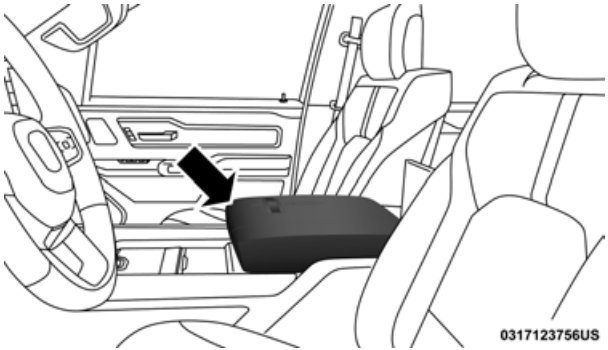

Center Storage Compartment

WARNING!

- **This armrest is not a seat. Anyone seated on the armrest could be seriously injured during vehicle operation, or a collision. Only use the center seating position when the armrest is fully upright.**
- **In a collision, the latch may open if the total weight of the items stored exceeds about 10 lbs (4.5 kg). These items could be thrown about endangering occupants of the vehicle. Items stored should not exceed a total of 10 lbs (4.5 kg).**

Pull on the upper handle on the front of the armrest to raise the cover. The upper storage area contains a USB power outlet located at the rear of the area that can be used to power small electrical devices, refer to “Electrical Power Outlets” for further information.

With the upper lid closed, pull on the lower handle to open the lower storage bin. The lower bin contains a power inverter outlet located in the forward portion of the lower bin. There is also a “fill line” located long the **rear** inside wall of the lower bin. Contents above the “fill line” may interfere with cupholder placement if equipped with a premium center console.

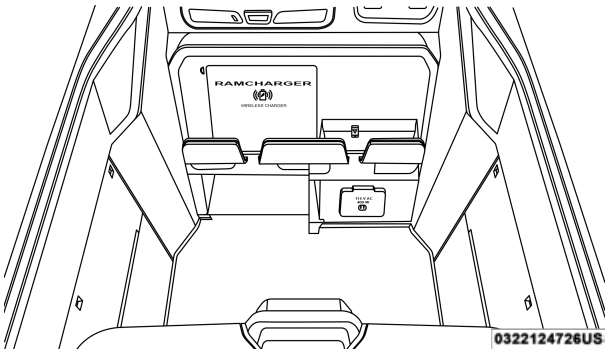

Forward Portion Of Lower Storage Bin

WARNING!
Do not operate this vehicle with a console compartment lid in the open position. Driving with the console compartment lid open may result in injury in a collision.

Premium Center Console — If Equipped

The premium center console is equipped with two front storage bins located in front of the center storage compartment. These storage bins may be equipped with tandem doors. Push the front bin to access the cupholders. Or push the rear bin to access the coinholder/small storage bin.

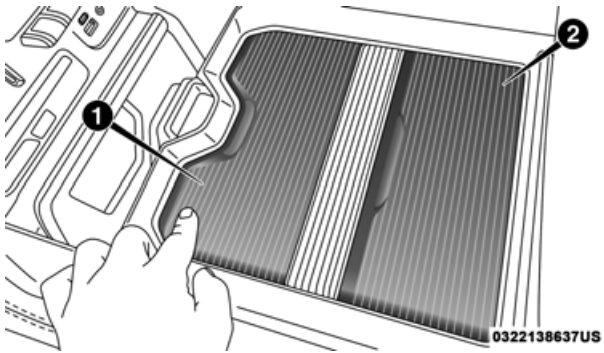

Center Console Tandem Doors— If Equipped

1 — Push Front Bin Access
2 — Push Rear Bin Access

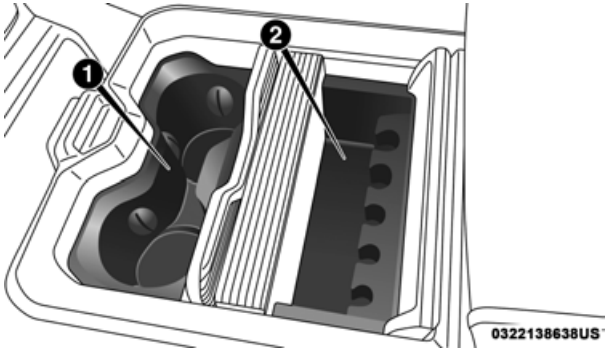

Tandem Doors Open Position

1 — Front Bin Open
2 — Rear Bin Open

Push the release button at the front of the cupholder bin to slide tray rearward for access of front lower storage bin, or forward to access the rear lower storage bin with the center console lid in the open position.

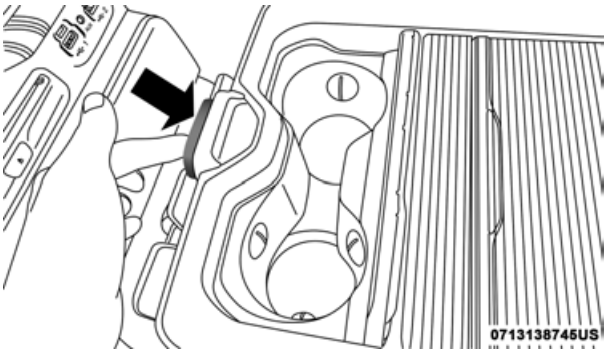

Push Release Button To Slide Tray

Front Bench Seat Storage — If Equipped

If your vehicle is equipped with a front bench seat, storage can be found by folding down the center seat back. A console storage area and cupholders are available. With the seatback in the upright position, lifting the seat bottom also reveals a storage location.

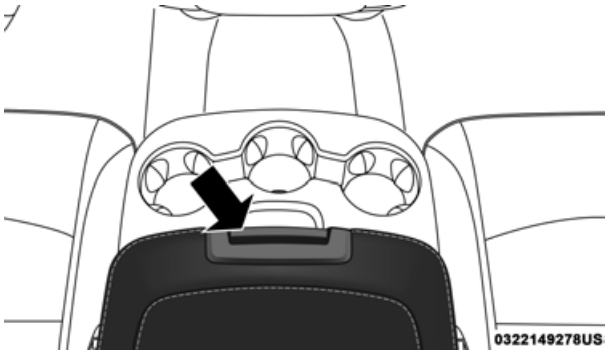

Front Bench Seat Storage

There is a storage drawer located in the lower center of the instrument panel. It can be released by pushing the access button above it. The drawer is actuator assisted once the access button is pushed. Pull drawer outward to the fully open position.

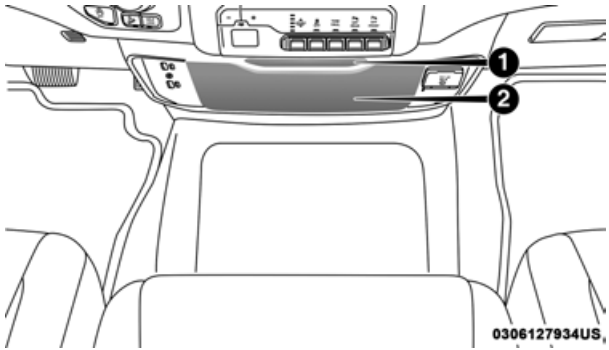

Storage Drawer

1 — Access Button
2 — Storage Drawer

Seatback Storage

Located in the back of both the driver and passenger front seats are pockets that can be used for storage.

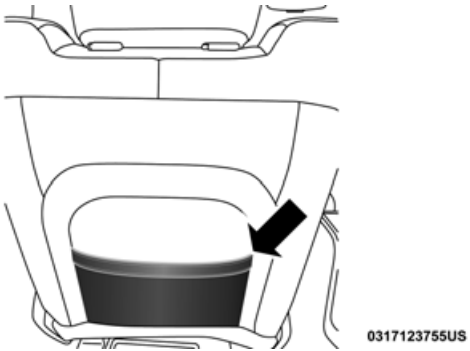

Driver's Side Seatback Storage

Second Row In-Floor Storage Bin — If Equipped

In-floor storage bins are located in front of the second row seats and can be used for extra storage. The storage bins have removable liners that can be easily removed for cleaning.

To open the in-floor storage bin, lift upward on the handle of the latch and open the lid.

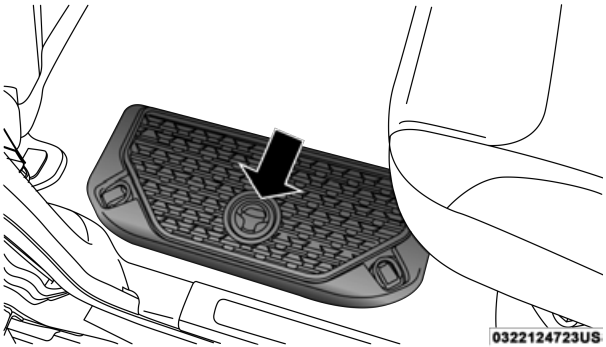

In-Floor Storage Bin Latch

NOTE:
The front seat may have to be moved forward to fully open the lid.

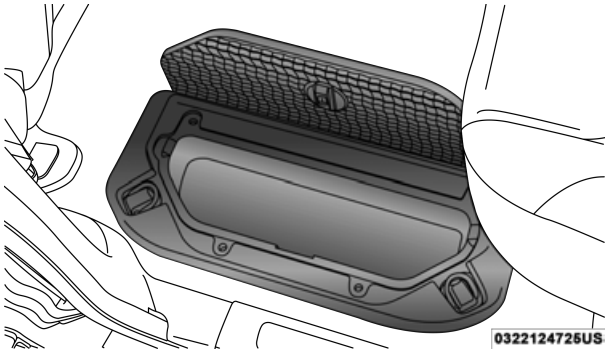

Opened Storage Bin

Each storage bin also contains two hooks for securing cargo. These hooks should be used to secure loads safely when the vehicle is moving.

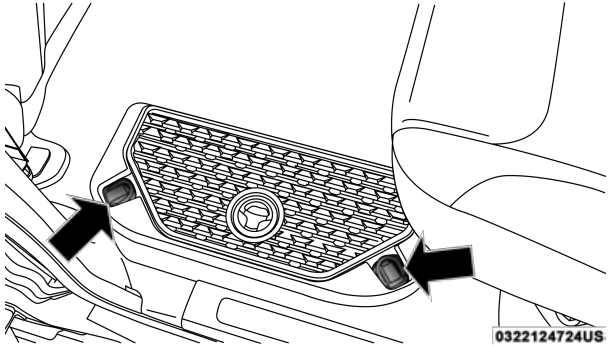

In-Floor Storage Bin Hooks

NOTE:
The maximum load limit for each hook is 250 lbs (113 kg).

Storage Bin (Regular Cab)

The storage bin is located behind the front seats and runs the length of the cab.

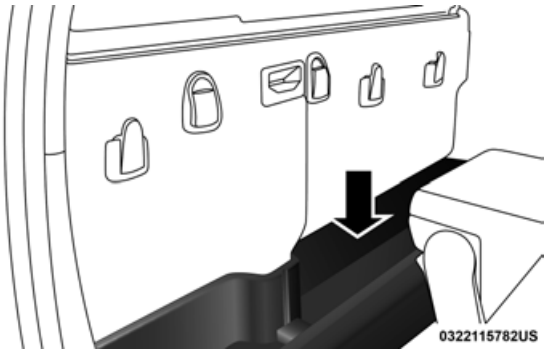

Storage Bin

Fold Flat Load Floor — If Equipped

Crew Cab models with a 60/40 rear seat may be equipped with a folding load floor.

WARNING!
Do not operate the vehicle with loose items stored on the load floor. While driving or in an accident you may experience abrupt stopping, rapid acceleration, or sharp turns. Loose objects stored on the load floor may move around with force and strike occupants, resulting in serious or fatal injury.

Unfolding The Load Floor/Crew Cab

1. Lift the 60/40 seat cushion(s) to the upward position.

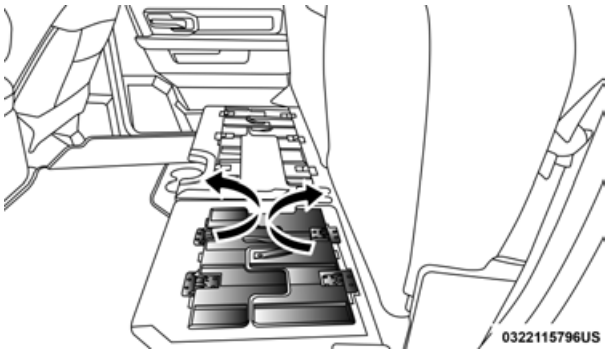

Load Floor Legs In Stowed Position

2. Unfold both the legs using the straps.

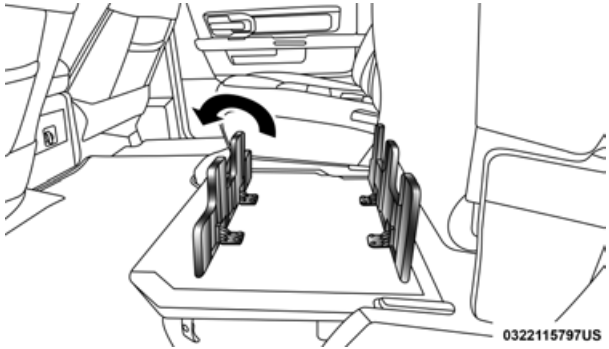

Load Floor Legs In Opened Position

3. Lift the front panel until the load floor unfolds into position.

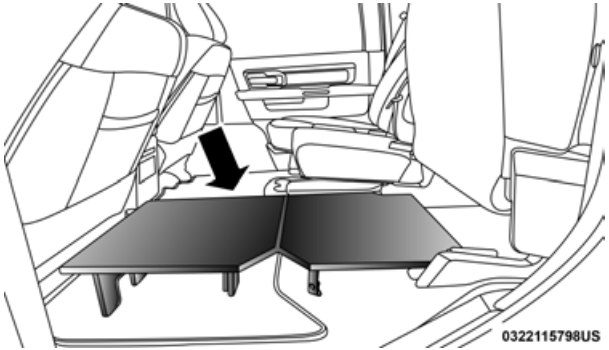

Load Floor In Open Position

4. Reverse the procedure to store the load floor.

Positioning The Load Floor For Storage Access Under The Seat

1. Lift the 60/40 seat cushion(s) to the upward position.
2. Unsnap the securing snap located at either side of the load floor.
3. Lift the load floor up to access storage under the load floor.

WARNING!
Do not drive with the load floor in the up position. When stopping fast or in an accident, the load floor could move to the down position causing serious injury.

Crew Cab — If Equipped

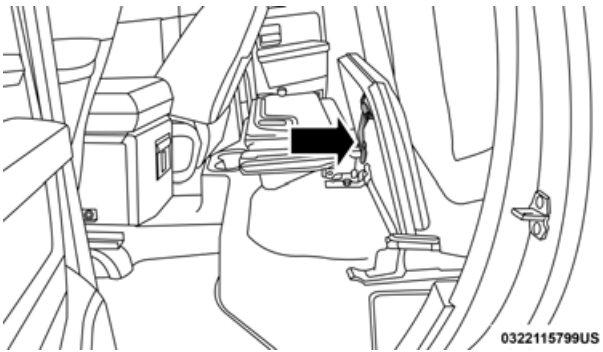

Load Floor Securing Straps/Crew Cab

4. Reverse the procedure to put the load floor back in the secured down position before you operate the vehicle.

Below Rear Seat Storage (Crew Cab)

The Crew Cab models provide additional storage under the rear seats. Lift the seats to access the storage compartment.

To open the storage compartments, unsnap the securing snap located at either side of the load floor and lift upward on the fold flat lid.

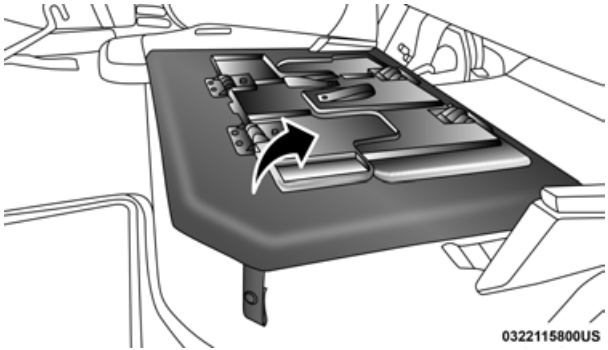

Crew Cab Storage

NOTE:
For more information on storage and the fold flat floor, refer to “Fold Flat Load Floor” in this section.

Cupholders

Front Seat Cupholders

For vehicles equipped with a center console, two cupholders are located in front of the console storage bin.

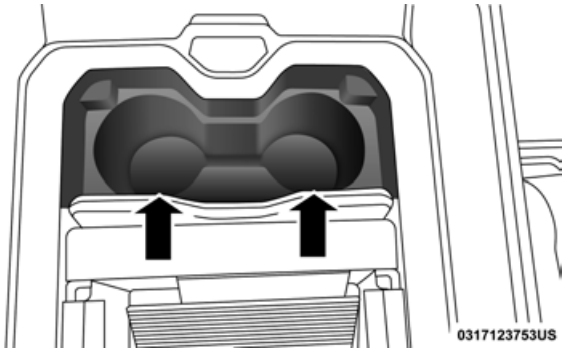

Front Cupholders

NOTE:
If the vehicle is equipped with a premium center console with double (tandem) doors, push the front bin door to access the cupholders.

Vehicles Equipped With 40/20/40 Seats

The cupholders are located on the backside of the center portion of the front seat (20). Fold down the center section of the front seat to gain access to the cupholders.

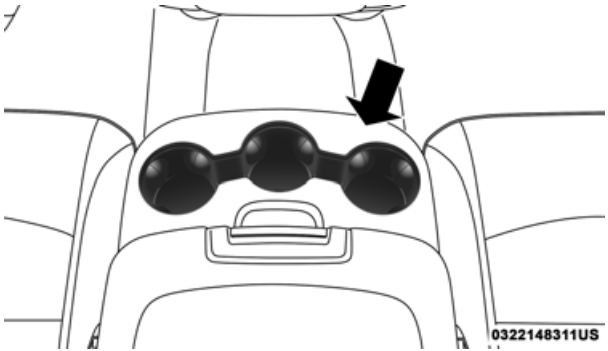

Front Cupholders With Bench Seat

Rear Cupholders — If Equipped

Some vehicles are equipped with rear cupholders located in the center armrest.

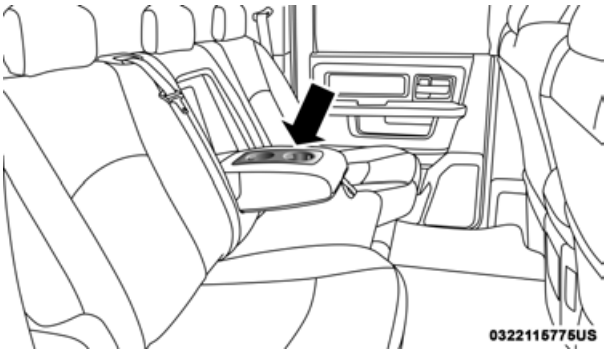

Rear Armrest Cupholder

Some vehicles may be equipped with a rear cupholder that consists of two cup wells for rear passenger convenience.

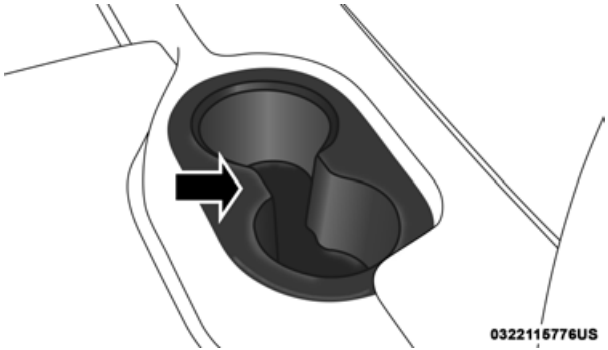

Rear Cup Wells

Electrical Power Outlets

The auxiliary 12 Volt (13 Amp) power outlet can provide power for in-cab accessories designed for use with the standard "cigar lighter" plug. The 12 Volt power outlets and 5 Volt (2.5 Amp) USB Port (Charge Only) have a cap attached to the outlet indicating "12V DC," together with either a key symbol, battery symbol, or USB symbol.

A key symbol indicates that the key must be in the ON/RUN or ACC positions for the outlet to provide power. The battery symbol indicates that the outlet is connected to the battery, and can provide power at all times.

CAUTION!

- **Do not exceed the maximum power of 160 Watts (13 Amps) at 12 Volts. If the 160 Watts (13 Amps) power rating is exceeded, the fuse protecting the system will need to be replaced.**
- **Power outlets are designed for accessory plugs only. Do not insert any other object in the power outlets as this will damage the outlet and blow the fuse. Improper use of the power outlet can cause damage not covered by your New Vehicle Limited Warranty.**

An auxiliary power outlet can be found in the tray on top of the center stack. This power outlet only works when the vehicle is in the ON/RUN or ACC position.

0322124358US

Power Outlet — Top Of Center Stack

Power Outlet Fuse Locations:

- F104 Fuse 20 A Yellow UCI Port/ USB Rear Center Console
- F90Fuse 20 A Yellow Instrument Panel Power Outlet Battery Fed (If Equipped)
- F91 Fuse 20 A Yellow Instrument Panel Power Outlet Ignition Fed (If Equipped)
- F93 Fuse 20 A Yellow Cigar Lighter/ Instrument Panel Power Outlet (If Equipped)

When the vehicle is turned off, be sure to unplug any equipment as to not drain the battery of the vehicle. All accessories connected to the outlet(s) should be removed or turned off when the vehicle is not in use to protect the battery against discharge.

WARNING!
To avoid serious injury or death: • **Only devices designed for use in this type of outlet should be inserted into any 12 Volt outlet.** • **Do not touch with wet hands.** • **Close the lid when not in use and while driving the vehicle.** • **If this outlet is mishandled, it may cause an electric shock and failure.**

CAUTION!

- **Many accessories that can be plugged in draw power from the vehicle's battery, even when not in use (i.e., cellular phones, etc.). Eventually, if plugged in long enough, the vehicle's battery will discharge sufficiently to degrade battery life and/or prevent the engine from starting.**
- **Accessories that draw higher power (i.e., coolers, vacuum cleaners, lights, etc.), will discharge the battery even more quickly. Only use these intermittently and with greater caution.**
- **After the use of high power draw accessories, or long periods of the vehicle not being started (with accessories still plugged in), the vehicle must be driven a sufficient length of time to allow the generator to recharge the vehicle's battery.**

Power Inverter — If Equipped

If equipped, a 115 Volt (400 Watts Maximum) inverter may be located inside the center console towards the right hand side, just under the Wireless Charging Pad (if equipped). This inverter can power cellular phones, electronics and other low power devices requiring power up to 400 Watts. Certain high-end video game consoles exceed this power limit, as will most power tools.

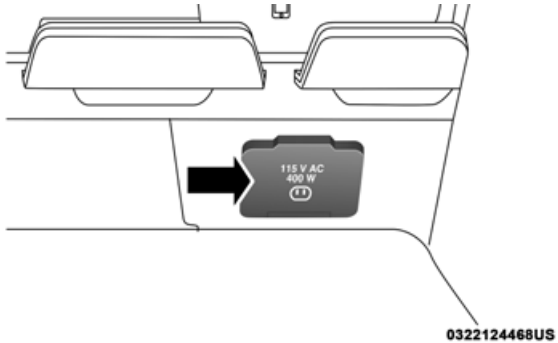

Center Console Power Inverter Outlet

There is also a second 115 Volt (400 Watts Maximum) power inverter located on the rear of the center console. This inverter can power cellular phones, electronics and other low power devices requiring power up to 400 Watts. Certain high-end video game consoles exceed this power limit, as will most power tools.

All power inverters are designed with built-in overload protection. If the power rating of 400 Watts is exceeded, the power inverter shuts down. Once the electrical device has been removed from the outlet the inverter should reset.

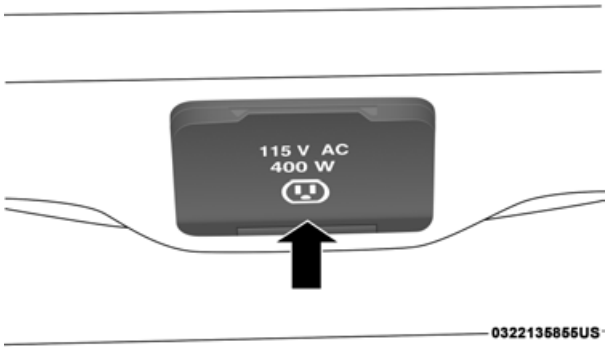

Rear Center Console Power Inverter Outlet

NOTE:
400 Watts is the maximum for the inverter, not each outlet. If three outlets are in use, 400 Watts is shared amongst the devices plugged in.

If equipped, a 115 Volt (400 Watts Maximum) inverter may be located inside the ram box of your vehicle. The inverter can be turned on by the Instrument Panel Power Inverter switch located to the left of the steering wheel. This inverter can power cellular phones, electronics and other low power devices requiring power up to 400 Watts. Certain high-end video game consoles exceed this power limit, as will most power tools.

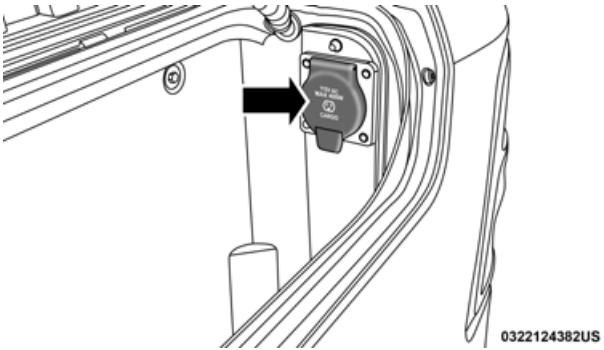

Ram Box Power Inverter

Instrument Panel Power Inverter Switch

If equipped, there may be a 115 Volt (400 Watts Maximum) inverter located to the right of the center stack, just below the climate controls. This inverter can power cellular phones, electronics and other low power devices requiring power up to 400 Watts. Certain high-end video game consoles exceed this power limit, as will most power tools.

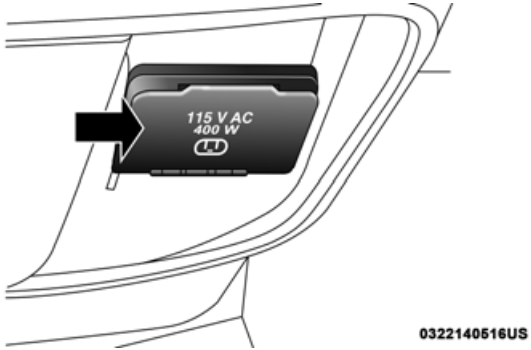

Center Stack Power Inverter

To turn on the power outlet, simply plug in the device. The outlet turns off when the device is unplugged.

NOTE:

- The Power Inverter only turns on if the ignition is in the ACC or ON/RUN position.
- Due to built-in overload protection, the power inverter shuts down if the power rating is exceeded.

WARNING!
To avoid serious injury or death: • **Do not insert any objects into the receptacles.** • **Do not touch with wet hands.** • **Close the lid when not in use.** • **If this outlet is mishandled, it may cause an electric shock and failure.**

Wireless Charging Pad — If Equipped

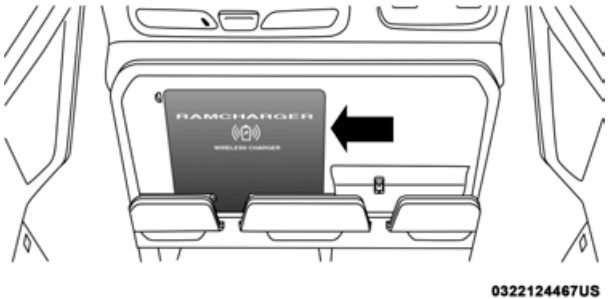

Wireless Charging Pad

Your vehicle may be equipped with a 15W 3A Qi wireless charging pad located inside of the center console just below the CD player (if equipped). This charging pad is designed to wirelessly charge your Qi enabled mobile phone. Qi is a standard that uses magnetic induction to transfer power to your mobile device.

Your mobile phone must be designed for Qi wireless charging. If the phone is not equipped with Qi wireless charging functionality, an aftermarket sleeve or a specialized back plate can be purchased from your mobile phone provider or an local electronics retailer. Please see your phone's owner's manual for further information.

The wireless charging pad is equipped with an anti-slip mat, an adjustable cradle to hold your mobile phone in place and an LED indicator light.

CAUTION!
The key fob should not be placed on the charging pad or within 15 cm (150 mm) of it. Doing so can cause excessive heat buildup and damage to the fob. Placing the fob in close proximity of the charging pad blocks the fob from being detected by the vehicle and prevents the vehicle from starting.

Overhead Sunglass Storage

At the front of the overhead console, a compartment is provided for the storage of one pair of sunglasses.

From the closed position, push the door latch to open the compartment.

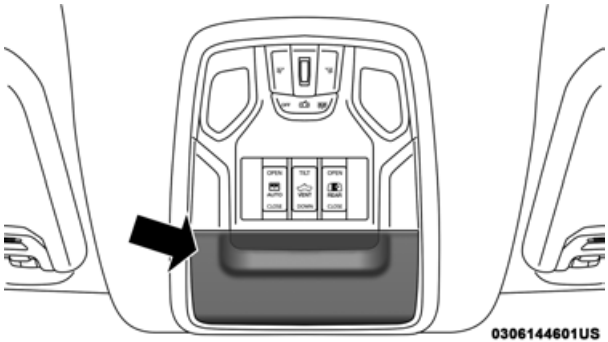

Overhead Sunglass Door

The door will slowly rotate to the full open position.

PICKUP BOX

The pickup box has many features designed for utility and convenience.

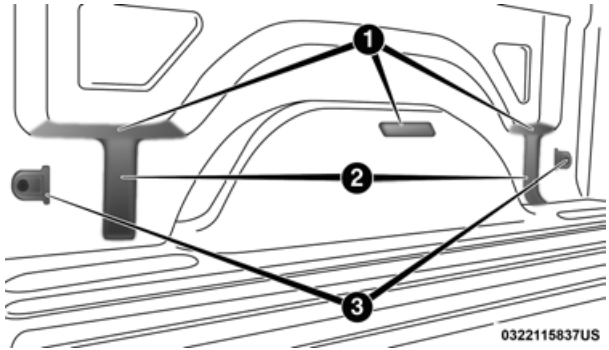

Pick Up Box Features

1 — Upper Load Floor Indents
2 — Bulk Head Dividers
3 — Cleats

NOTE:
If you are installing a Toolbox, Ladder Rack or Headache Rack at the front of the Pickup Box, you must use Mopar Box Reinforcement Brackets that are available from an authorized dealer.

You can carry wide building materials (sheets of plywood, etc.) by building a raised load floor. Place lumber across the box in the indentations provided above the wheel housings and in the bulkhead dividers to form the floor.

WARNING!

- **The pickup box is intended for load carrying purposes only, not for passengers, who should sit in seats and use seat belts.**
- **Care should always be exercised when operating a vehicle with unrestrained cargo. Vehicle speeds may need to be reduced. Severe turns or rough roads may cause shifting or bouncing of the cargo that may result in vehicle damage. If wide building materials are to be frequently carried, the installation of a support is recommended. This will restrain the cargo and transfer the load to the pickup box floor.**

(Continued)

WARNING! *(Continued)*

- **If you wish to carry more than 600 lbs (272 kg) of material suspended above the wheelhouse, supports must be installed to transfer the weight of the load to the pickup box floor or vehicle damage may result. The use of proper supports will permit loading up to the rated payload.**
- **Unrestrained cargo may be thrown forward in an accident causing serious or fatal injury.**

There are stampings in the sheet metal on the inner side bulkheads of the box in front of and behind both wheel housings. Place wooden boards across the box from side to side to create separate load compartments in the pickup box.

There are four tie-down cleats bolted to the lower sides of the pickup box that can sustain loads up to 1000 lbs (450 kg) total.

Cargo Camera — If Equipped

Your vehicle may be equipped with the Cargo Camera that allows you to see an image of the inside of the pickup box. The image will be displayed in the Uconnect screen.

The Cargo Camera is located in the bottom center area of the center high-mounted stoplamp (CHMSL).

A touchscreen button to indicate the current active camera image being displayed is made available whenever the Cargo Camera image is displayed.

A touchscreen button to switch the display to rear view camera image is made available whenever the Cargo Camera image is displayed.

A touchscreen button "X" to disable display of the camera image is made available when the vehicle is not in REVERSE gear.

A display timer is initiated when the Cargo Camera image is displayed. The image will continue to be displayed until the display timer exceeds 10 seconds and the vehicle speed is above 8 mph (13 km/h) or the touchscreen button "X" to disable display of the Cargo Camera image is pressed.

NOTE:

- If the vehicle speed remains below 8 mph (13 km/h), the Cargo Camera image will be displayed continuously until the touchscreen button "X" to disable display of the Cargo Camera image is pressed.
- If snow, ice, mud, or any foreign substance builds up on the camera lens, clean the lens, rinse with water, and dry with a soft cloth. Do not cover the lens.

Cargo Camera With Dynamic Centerline (Available With Surround View Camera Only) — If Equipped

The Dynamic Centerline feature provides an overlay on the Cargo Camera display screen that aligns to the center of the pickup box to aid in hooking up a fifth wheel camper or gooseneck trailer. The centerline auto aligns to the center of the pickup box, and can also be manually adjusted. The centerline will adjust in response to steering angle inputs, and will not obstruct the gooseneck receiver or an approaching trailer gooseneck in the camera feed.

Activation

The Dynamic Centerline feature can be activated through the Uconnect settings by pressing the Cargo Camera soft button, followed by the “Dynamic Centerline” soft button on the touchscreen.

If the Dynamic Centerline feature is turned on, the overlay will display anytime the Cargo Camera image is displayed.

Adjusting Centerline

Follow the steps below to manually adjust the centerline:

1. Press the “Adjust Centerline” soft button located in the bottom right corner of the Cargo Camera display.
2. Use the arrows on the bottom left corner of the Cargo Camera display to adjust the centerline horizontally or vertically.
3. Once the desired position is achieved, press the “Accept” button to set the centerline to the newly specified position.

Deactivation

The Dynamic Centerline feature will automatically be deactivated whenever the Cargo Camera display is deactivated. It can also be manually deactivated through the Uconnect settings.

For further information, refer to “Surround View Camera” in “Starting And Operating.”

Turning Cargo Camera On Or Off — With Uconnect 4C/4C NAV

1. Press the “Controls” button located on the bottom of the Uconnect display.
2. Press the “Cargo Camera” button to turn the Cargo Camera system on.

NOTE:
Once initiated by the "Cargo Camera" button, the Cargo Camera image will be displayed until the vehicle speed remains below 8 mph (13 km/h) and the 10 second timer runs out. The image may be deactivated by pressing the "X" soft button, turning the ignition OFF, placing the gear selector in PARK, or pressing the image defeat [X] button. On deactivation, the previous selected screen will appear.

RAMBOX — IF EQUIPPED

The RamBox system is an integrated pickup box storage and cargo management system consisting of three features:

- Integrated box side storage bins
- Cargo divider
- Bed rail tie-down system

RamBox Integrated Box Side Storage Bins

Cargo storage bins are located on both sides of the pickup box. The cargo storage bins provide watertight, lockable, illuminated storage for up to 300 lbs (136 kg) of evenly distributed cargo.

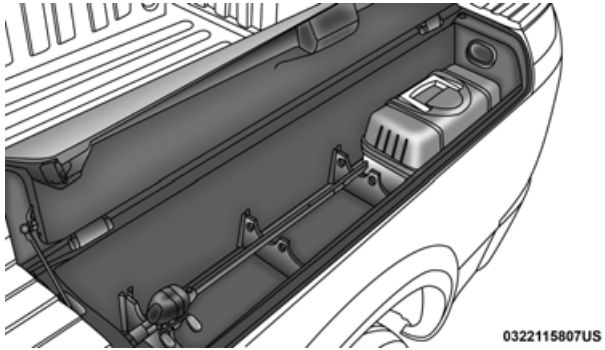

RamBox Cargo Storage Bins

CAUTION!
Failure to follow the following items could cause damage to the vehicle: • **Assure that all cargo inside the storage bins is properly secured.** • **Do not exceed cargo weight rating of 300 lbs (136 kg) for 2500 and 3500 series vehicles per bin.**

To open a storage bin with the RamBox unlocked, push and release the button located on the lid. The RamBox lid will open upward to allow hand access. Lift the lid to fully open.

NOTE:
RamBox will not open when the pushbutton is pushed if the RamBox is locked.

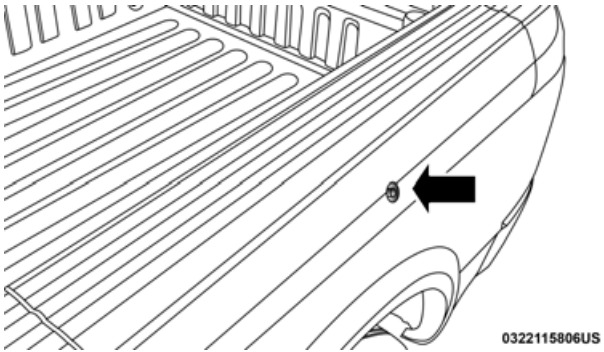

RamBox Pushbutton And Lock

CAUTION!
Leaving the lid open for extended periods of time could cause the vehicle battery to discharge. If the lid is required to stay open for extended periods of time, it is recommended that the bin lights be turned off manually using the on/off switch.

The interior of the RamBox will automatically illuminate when the lid is opened. In addition to the automatic illumination switch, there is a manual on/off switch located at the rear of each storage bin. Pushing the switch once will turn off the bin lights, pushing the switch again will turn the lights back on.

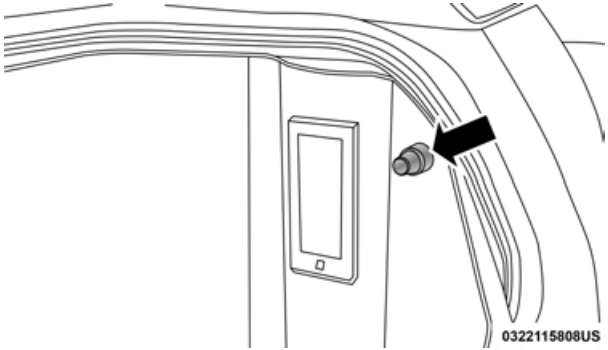

RamBox Light Switch

Cargo bins feature two removable drain plugs (to allow water to drain from bins). To remove plug, pull up on the edge. To install push plug downward into drain hole.

NOTE:
Provisions are provided in the bins for cargo dividers and shelf supports. These accessories (in addition to other RamBox accessories) are available from Mopar.

Locking And Unlocking RamBox

Push and release the lock or unlock button on the key fob to lock and unlock all doors, the tailgate and the RamBox (if equipped). Refer to "Keys" in "Getting To Know Your Vehicle" for further details. The RamBox storage bins can be locked using the vehicle key. To lock and unlock the storage bin, insert the key into the keyhole on the push button and turn clockwise to lock or counterclockwise to unlock. Always return the key to the upright (vertical) position before removing the key from the push button.

CAUTION!

- **Ensure cargo bin lids are closed and latched before moving or driving vehicle.**
- **Loads applied to the top of the bin lid should be minimized to prevent damage to the lid and latching/hinging mechanisms.**
- **Damage to the RamBox bin may occur due to heavy/sharp objects placed in bin that shift due to vehicle motion. In order to minimize potential for damage, secure all cargo to prevent movement and protect inside surfaces of bin from heavy/sharp objects with appropriate padding.**

RamBox Safety Warning

Carefully follow these warnings to help prevent personal injury or damage to your vehicle:

WARNING!
• **Always close the storage bin covers when your vehicle is unattended.** • **Do not allow children to have access to the storage bins. Once in the storage bin, young children may not be able to escape. If trapped in the storage bin, children can die from suffocation or heat stroke.** • **In an accident, serious injury could result if the storage bin covers are not properly latched.** • **Do not drive the vehicle with the storage bin covers open.** • **Keep the storage bin covers closed and latched while the vehicle is in motion.** • **Do not use a storage bin latch as a tie down.**

RamBox Storage Bin Cover Emergency Release Lever — If Equipped

As a security measure, a Storage Bin Cover Emergency Release is built into the storage bin cover latching mechanism.

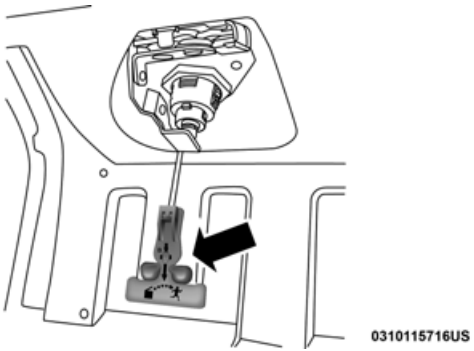

Storage Bin Cover Emergency Release Lever

NOTE:
In the event of an individual being locked inside the storage bin, the storage bin cover can be opened from inside of the bin by pulling on the glow-in-the-dark lever attached to the storage bin cover latching mechanism.

Bed Divider — If Equipped

The bed divider has two functional positions:

- Storage Position
- Divider Position

Storage Position

The storage position for the bed divider is at the front of the truck bed which maximizes the bed cargo area when not in use.

To install the bed divider into the storage position, perform the following:

1. Make sure the center handle is unlocked using the vehicle key and rotate the center handle vertically to release the divider side gates.

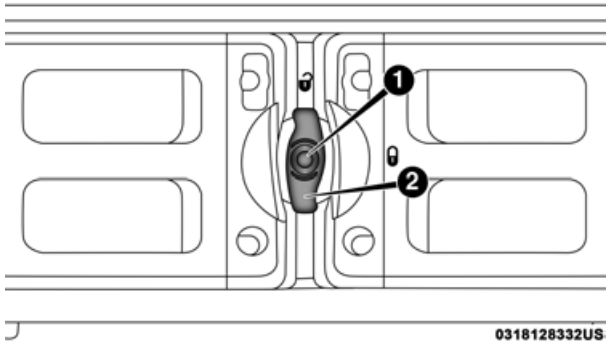

Center Handle And Lock

1 — Center Handle Lock
2 — Handle

2. With the side gates open, position the divider fully forward in the bed against the front panel.

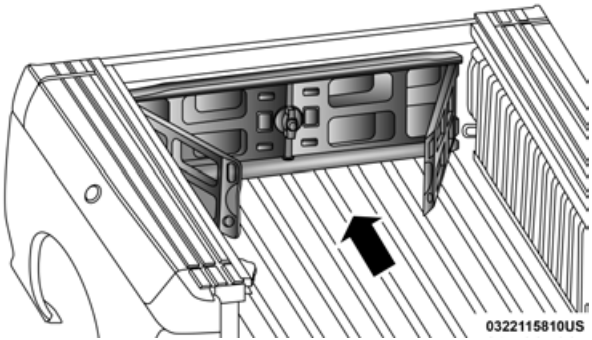

Storage Position

3. Rotate the side gates closed allowing the outboard ends to be positioned in front of the cargo tie down loops.

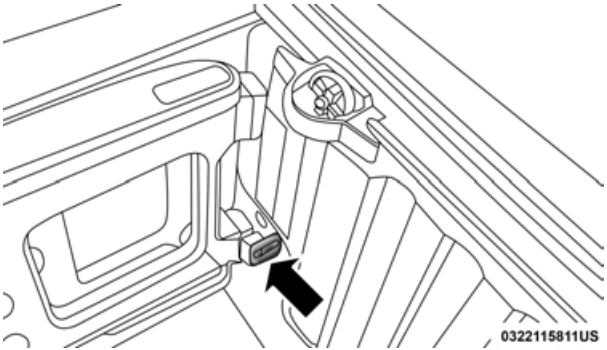

Cargo Tie Down Loop

4. Rotate the center handle horizontally to secure the side gates in the closed position.

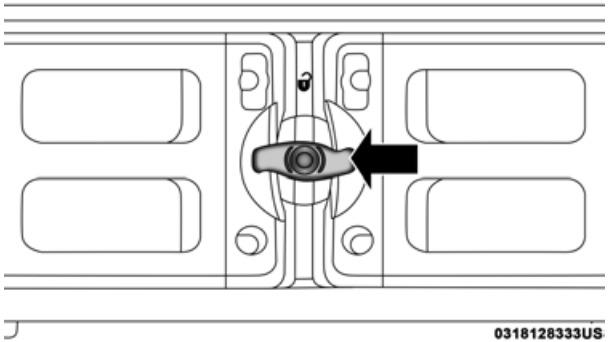

Side Gates Closed

5. Lock the center handle using the vehicle key to secure the panel into place.

Divider Position

The divider position is intended for managing your cargo and assisting in keeping cargo from moving around the bed. There are 11 divider slots along the bed inner panels which allow for various positions to assist in managing your cargo.

To install the bed divider into a divider position, perform the following:

1. Make sure the center handle is unlocked using the vehicle key and rotate the center handle vertically to release the divider side gates.

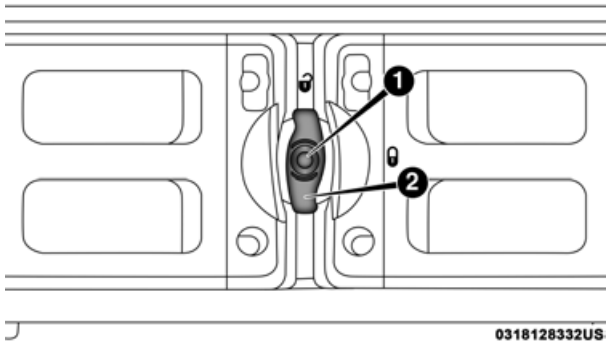

Center Handle And Lock

1 — Center Handle Lock
2 — Handle

2. With the side gates open, position the divider so the outboard ends align with the intended slots in the sides of the bed.

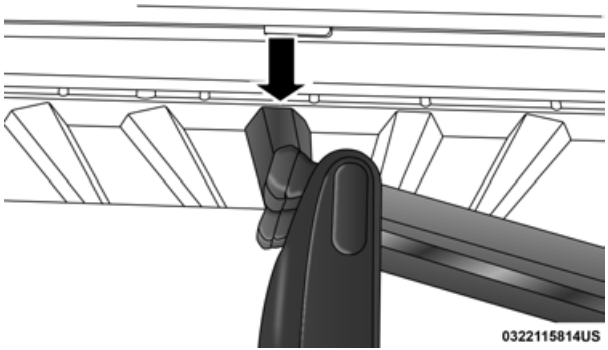

Aligning Gate To Slots

3. Rotate the side gates closed so that the outboard ends are secured into the intended slots of the bed.

4. Rotate the center handle horizontally to secure the side gates in the closed position.

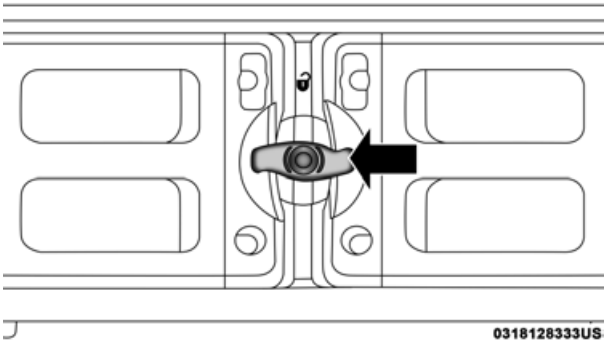

Side Gates Closed

5. Lock the center handle to secure the panel into place.

Bed Rail Tie-Down System

CAUTION!
The maximum load per cleat should not exceed 250 lbs (113 kg) and the angle of the load on each cleat should not exceed 45 degrees above horizontal, or damage to the cleat or cleat rail may occur.

NOTE:
This feature is available for vehicles both equipped, or not equipped, with a RamBox.

There are two adjustable cleats on each side of the bed that can be used to assist in securing cargo.

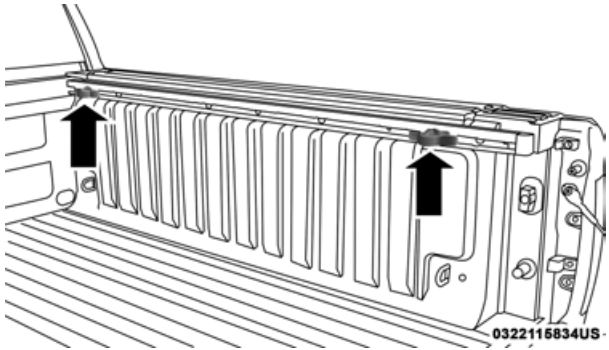

Adjustable Cleats

Each cleat must be located and tightened down in one of the detents, along either rail, in order to keep cargo properly secure.

To move the cleat to any position on the rail, turn the nut counterclockwise, approximately three turns. Then pull out on the cleat and slide it to the detent nearest the desired location. Make sure the cleat is seated in the detent and tighten the nut.

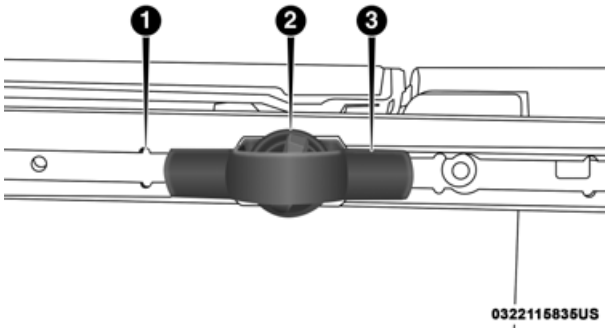

Adjustable Cleat Assembly

1 — Utility Rail Detent
2 — Cleat Retainer Nut
3 — Utility Rail Cleat

To remove the cleats from the utility rail, remove the end cap screw located in the center of the end cap, using a #T30 Torx head driver. Remove the end cap and slide the cleat off the end of the rail.

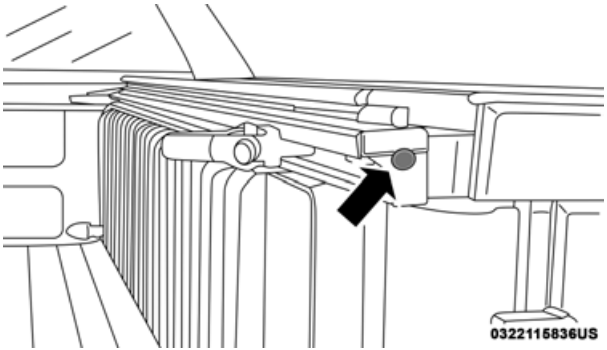

Utility Rail End Cap

SLIDE-IN CAMPERS

Camper Applications

Certain truck models are not recommended for slide-in campers. To determine if your vehicle is excluded, please refer to the "Consumer Information Truck-Camper Loading" document at www.ramtrucks.com. For safety reasons, follow all instructions in this important document.

WARNING!
To avoid inhaling carbon monoxide, which is deadly, the exhaust system on vehicles equipped with "Cap or Slide-In Campers" should extend beyond the overhanging camper compartment and be free of leaks.

NOTE:
When a cap or pickup camper is installed on a vehicle, an alternate Center High-Mounted Stop Light (CHMSL) must be provided.

EASY-OFF TAILGATE

To simplify mounting of a camper unit with an overhang, the tailgate can be removed.

NOTE:
The electric connector at the bottom of the tailgate must be disconnected prior to removing the tailgate.

Disconnecting The Rear Camera And Remote Keyless Entry

1. Open the tailgate to access the rear camera or Remote Keyless Entry connector bracket located on the rear sill.

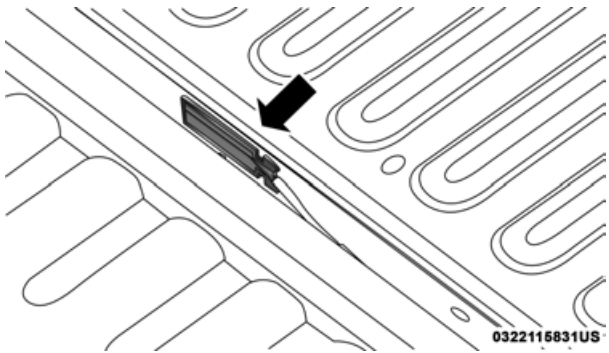

Connector Bracket

2. Remove the connector bracket from the sill by pushing inward in the locking tab.

0322115832US

Locking Tab

3. Disconnect the chassis wiring harness, ensuring the connector bracket does not fall into the sill.

4. Connect the chassis plug and bracket (provided in the glove compartment) to the chassis wiring harness and insert the bracket back into the sill.

5. Connect the tailgate plug (provided in the glove compartment) to the tailgate wiring harness to ensure that the terminals do not corrode.

6. Tape the tailgate harness and bracket against the forward-facing surface of the tailgate. This will prevent damaging the connector and bracket when storing or reinstalling the tailgate.

Removing The Tailgate

1. Disconnect the wiring harness for the rear camera and or power locks (if equipped).

NOTE:
Refer to "Disconnecting The Rear Camera And Remote Keyless Entry" in this section.

2. Unlatch the tailgate and remove the support cables by releasing the lock tang from the pivot.

NOTE:
Make sure tailgate is supported when removing support cables.

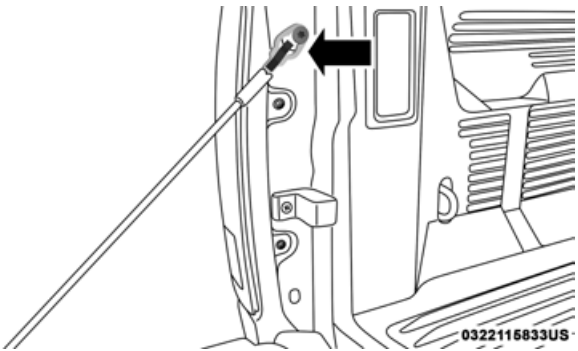

Locking Tang

3. Position the tailgate on a 45 degree angle.
4. Raise the right side of the tailgate until the right side pivot clears the hanger bracket.
5. Slide the entire tailgate to the right to free the left side pivot.
6. Remove the tailgate from the vehicle.

NOTE:
Do not carry the tailgate loose in the truck pickup box.

WARNING!
To avoid inhaling carbon monoxide, which is deadly, the exhaust system on vehicles equipped with "Cap or Slide-In Campers" should extend beyond the overhanging camper compartment and be free of leaks.

Locking Tailgate

The tailgate can be locked using the key fob lock button.

TRI-FOLD TONNEAU COVER — IF EQUIPPED

Your vehicle may be equipped with a Tri-Fold Tonneau Cover which consists of different features:

- Easy Tri-Fold cover
- Tonneau fore aft locator
- Crosscar inside bed locator
- Front and rear clamps
- Stowage strap
- Locking capability

NOTE:
The Tonneau Cover can be folded up and secured at the front of the box without removing it completely.

Tri-Fold Tonneau Cover Removal

To remove the Tonneau Cover, follow the next steps:

1. Open the tailgate to gain access to the rear pair of Tonneau Cover clamps located on the underside of the cover (left and right side).

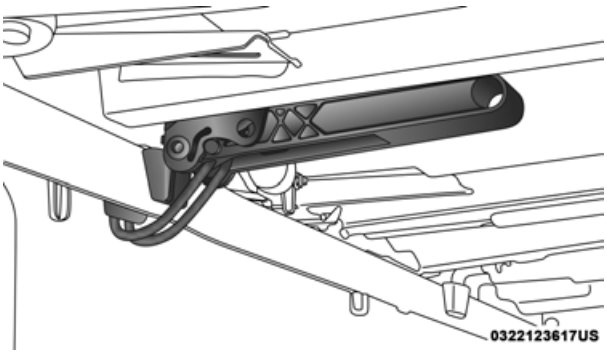

Clamped Position

NOTE:
If clamp wire is damaged replace immediately.

2. Pull both clamp handles down to release the Tonneau Cover's rear panel.

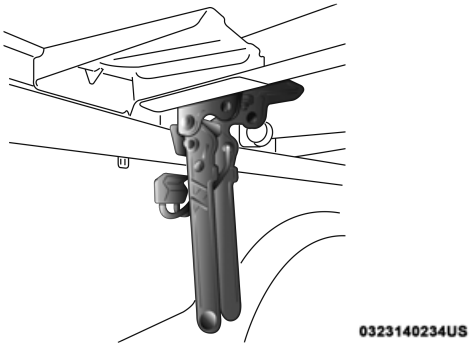

Released Position

3. From the released position, send the clamps to the Stowed Position by pushing from the yellow bumper up. Listen for a "clicking" sound to confirm the clamp has been properly stowed.

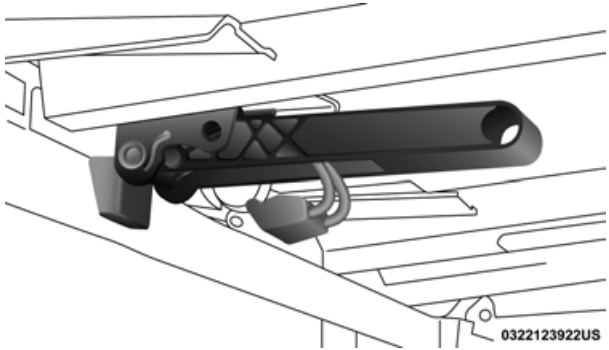

Stowed Position

CAUTION!
Make sure the Tonneau Cover clamp and clamp wire are in the proper stowed position. If the clamp and clamp wire are not properly stowed, damage to the Tonneau Cover material will result.

4. Fold the rear panel up onto the center panel (intermediate position).

Folded Rear Panel (Intermediate Position)

NOTE:
The vehicle cannot be driven when the Tonneau Cover is in this position.

5. Fold the rear and center panels up onto the front panel (Tri-Folded position).

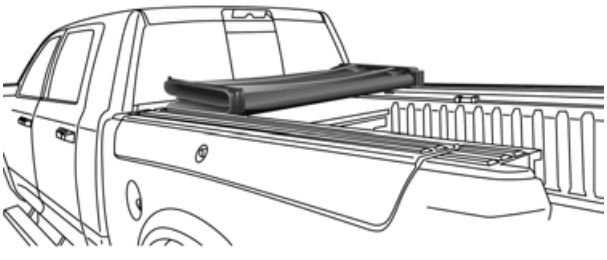

Tri-Folded Position

NOTE:

- When folding the center and rear panels, the sections MUST be held together to avoid damage to the cover material.
- It is not recommended to drive the vehicle with the Tonneau Cover in the Tri-Folded position.

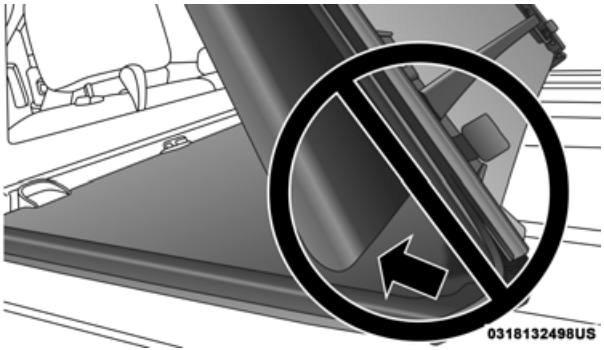

Incorrect Folding — Will Cause Damage

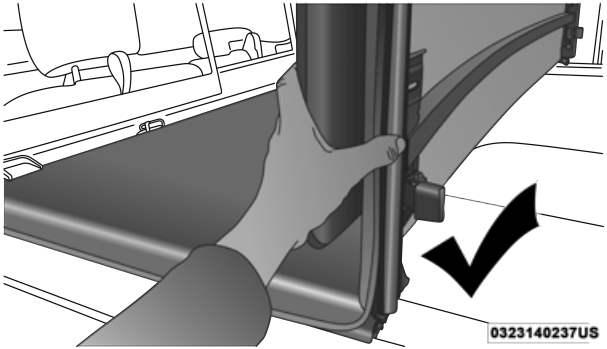

Correct Folding — Hold Panels Together

Correct Folding — Hold Panels Together

NOTE:
Fold the panels gently. It is not recommended to allow the panels to drop under their own weight.

6. Once on the Tri-Folded position, pull both front clamp handles down to the Released Position.

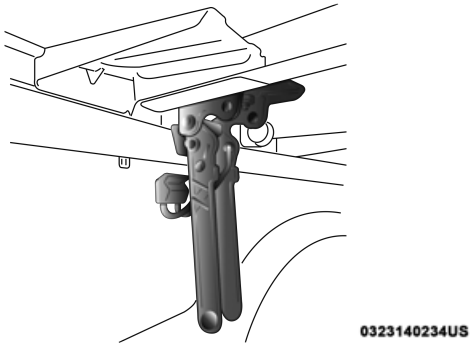

Released Position

7. From the Released Position, send the clamps to the Stowed Position by pushing from the yellow bumper up. Listen for a "clicking" sound to confirm the clamp has been properly stowed.

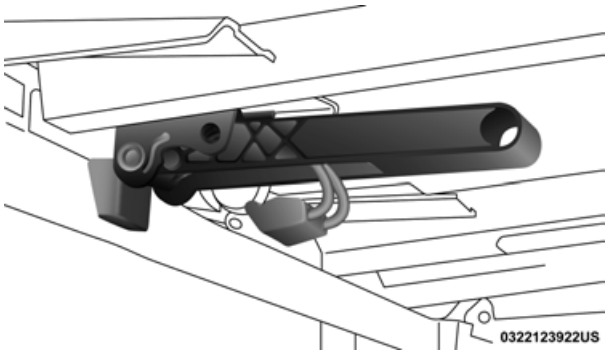

Stowed Position

8. Clip both stowage straps to prevent the Tonneau Cover panels from unfolding.

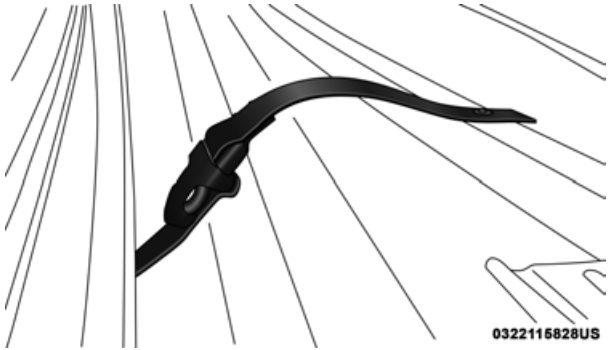

Stowage Strap

9. With two people, remove the Tonneau Cover.

NOTE:
Be sure the Tonneau Cover has been folded completely before removing.

Tri-Fold Tonneau Cover Installation

To install the Tonneau Cover follow the following steps:

1. Position the folded Tonneau Cover on the truck bed and push the cover forward against the front of the truck bed. The Tonneau Cover centers itself when placed on the vehicle.
2. Pull down on the first set of clamp handles to release the clamps from the stowed position.

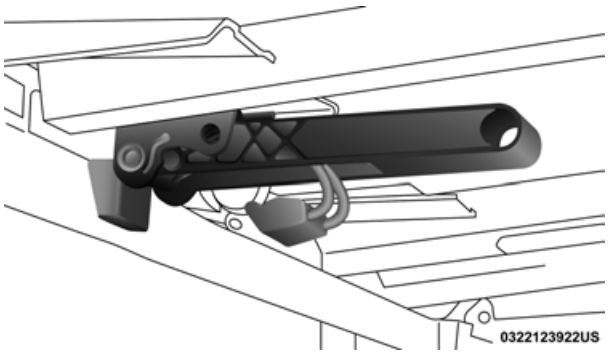

Stowed Position

3. Push clamp wires up and under the flange of the box (or flange of the Ram Box rail, if equipped) to the semi clamped position.

Semi Clamped Position

4. Push clamp handles upward to the clamped position to properly engage the clamps.

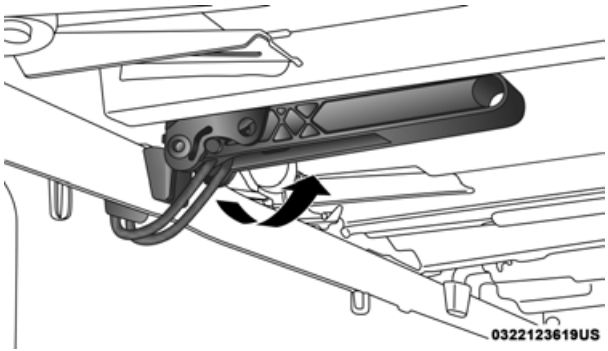

Clamped Position

NOTE:
Once clamped, be sure the clamps are not improperly attached to the truck bed flange.

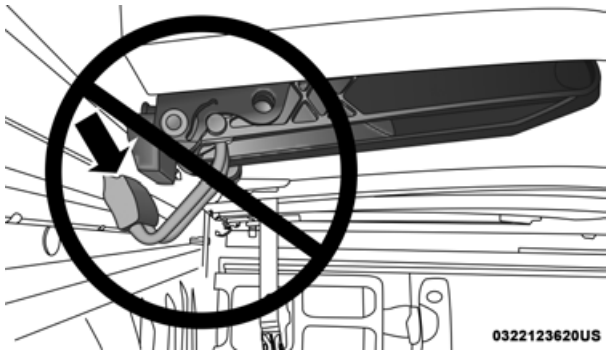

Improper Clamp Position

5. Disengage the stowage straps.

6. Unfold the center and rear panels to the intermediate position.

NOTE:
The vehicle cannot be driven when the Tonneau Cover is in this position.

Intermediate Position (Vehicle Cannot Be Driven)

NOTE:
When folding the center and rear panels, the sections **MUST** be held together to avoid damage to the cover material.

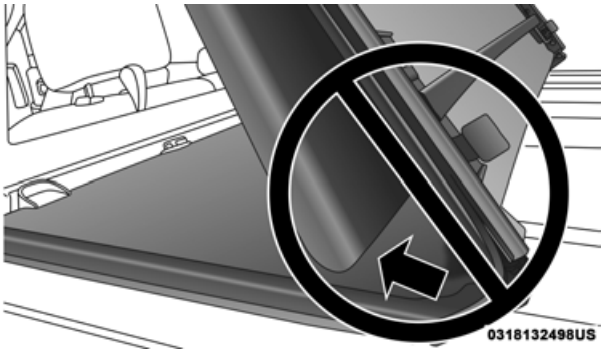

Incorrect Folding — Will Cause Damage

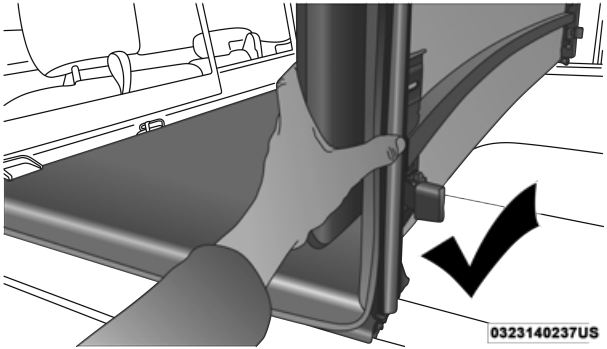

Correct Folding — Hold Panels Together

Correct Folding — Hold Panels Together

7. Completely unfold the Tonneau Cover.

Fully Unfolded Position

8. Pull the rear clamp handles down into the released position.

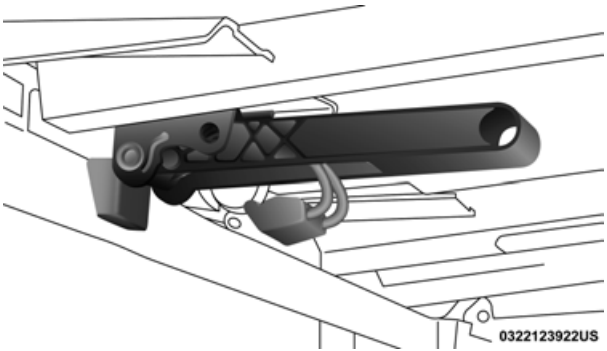

Stowed Position

9. Push clamp wires up and under the flange of box (or flange of Ram Box rail, if equipped) to the semi clamped position.

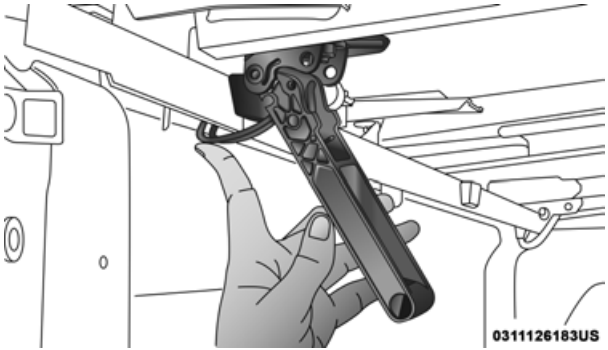

Semi Clamped Position

10. Push clamp handles upward to the clamped position to properly engage the clamps.

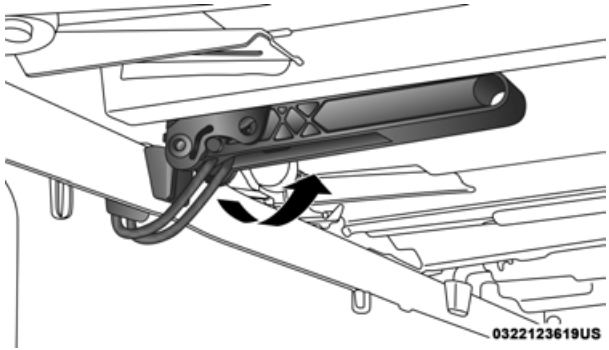

Clamped Position

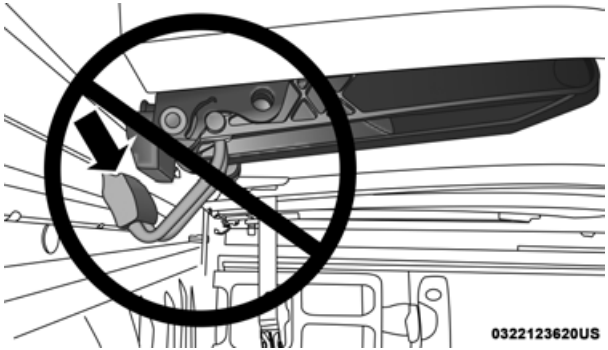

Improper Clamp Position

NOTE:
Once clamped, be sure the clamps are not partially clamped to the truck bed flange.

CAUTION!
It is the driver's responsibility to ensure the Tonneau Cover is properly installed on the vehicle. Failure to follow this procedure can result in detachment of the Tonneau Cover from the vehicle and/or damage to the vehicle/Tonneau Cover.

The Tonneau Cover clamps can be locked when in the clamped position by placing a lock through the locking hole.

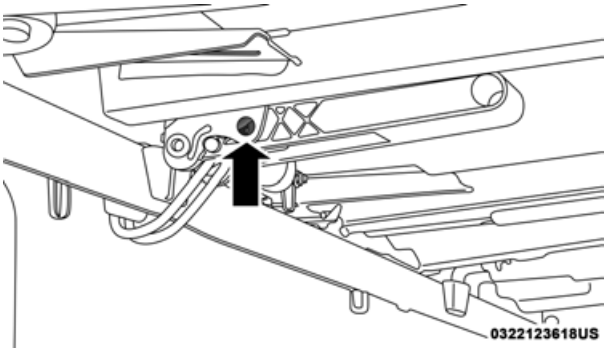

Locking Hole

Tri-Fold Tonneau Cover Cleaning

For proper cleaning of the Tonneau Cover, use Mopar Whitewall & Vinyl Top Cleaner and Mopar Leather & Vinyl Conditioner/Protectant.

GETTING TO KNOW YOUR INSTRUMENT PANEL

BASE / MIDLINE INSTRUMENT CLUSTER

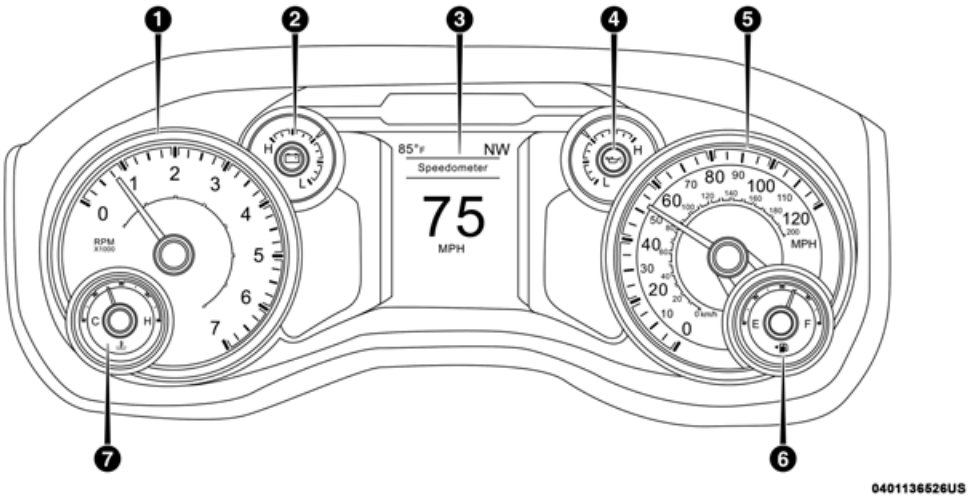

Base / Midline Instrument Cluster

Base / Midline Instrument Cluster Descriptions

1. Tachometer
   - Indicates the engine speed in revolutions per minute (RPM x 1000).
2. Voltmeter
   - When the vehicle is in the RUN state, the gauge indicates the electrical system voltage. The pointer should stay within the normal range if the battery is charged. If the pointer moves to either extreme left or right and remains there during normal driving, the electrical system should be serviced.
3. Instrument Cluster Display
   - When the appropriate conditions exist, this display shows the instrument cluster display messages. Refer to "Instrument Cluster Display" in "Getting To Know Your Instrument Panel" for further information.
4. Oil Pressure Gauge
   - The pointer should always indicate the oil pressure when the engine is running. A continuous high or low reading under normal driving conditions may indicate a lubrication system malfunction. Immediate service should be obtained from an authorized dealer.

NOTE:
In vehicles equipped with Stop/Start, an oil pressure indication of zero is normal during an Autostop.

5. Speedometer
   - Indicates vehicle speed.
6. Fuel Gauge
   - The pointer shows the level of fuel in the fuel tank when the ignition is in the ON/RUN position.
   - The fuel pump symbol points to the side of the vehicle where the fuel door is located.

7. Temperature Gauge

- The gauge pointer shows engine coolant temperature. The pointer positioned within the normal range indicates that the engine cooling system is operating satisfactorily.
- The gauge pointer will likely indicate a higher temperature when driving in hot weather, up mountain grades, or when towing a trailer. It should not be allowed to exceed the upper limits of the normal operating range.

WARNING!

A hot engine cooling system is dangerous. You or others could be badly burned by steam or boiling coolant. You may want to call an authorized dealer for service if your vehicle overheats. If you decide to look under the hood yourself, see "Servicing And Maintenance." Follow the warnings under the Cooling System Pressure Cap paragraph.

CAUTION!

Driving with a hot engine cooling system could damage your vehicle. If the temperature gauge reads "H," pull over and stop the vehicle. Idle the vehicle with the air conditioner turned off until the pointer drops back into the normal range. If the pointer remains on the "H," turn the engine off immediately and call an authorized dealer for service.

PREMIUM INSTRUMENT CLUSTER

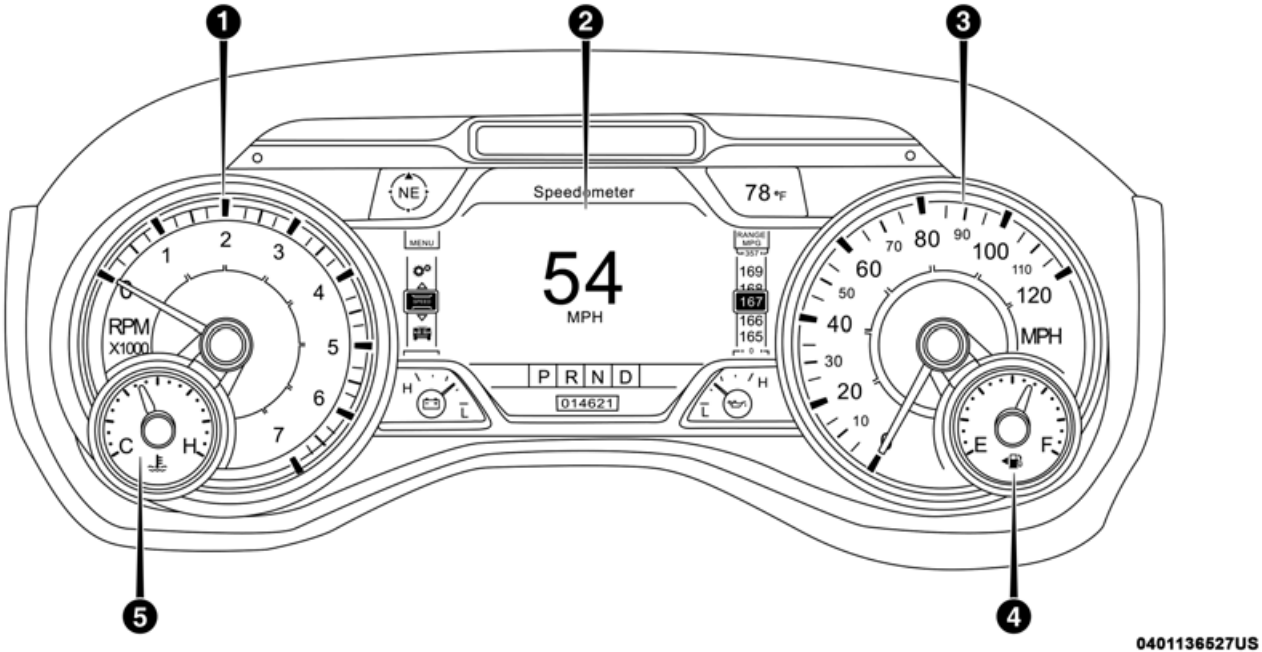

Premium Instrument Cluster

Premium Instrument Cluster Descriptions

1. Tachometer
   - Indicates the engine speed in revolutions per minute (RPM x 1000).
2. Instrument Cluster Display
   - When the appropriate conditions exist, this display shows the instrument cluster display messages. Refer to "Instrument Cluster Display" in "Getting To Know Your Instrument Panel" for further information.
3. Speedometer
   - Indicates vehicle speed.
4. Fuel Gauge
   - The pointer shows the level of fuel in the fuel tank when the ignition is in the ON/RUN position.
   - The fuel pump symbol points to the side of the vehicle where the fuel door is located.
5. Temperature Gauge
   - The gauge pointer shows engine coolant temperature. The pointer positioned within the normal range indicates that the engine cooling system is operating satisfactorily.
   - The gauge pointer will likely indicate a higher temperature when driving in hot weather, up mountain grades, or when towing a trailer. It should not be allowed to exceed the upper limits of the normal operating range.

WARNING!
A hot engine cooling system is dangerous. You or others could be badly burned by steam or boiling coolant. You may want to call an authorized dealer for service if your vehicle overheats. If you decide to look under the hood yourself, see "Servicing And Maintenance." Follow the warnings under the Cooling System Pressure Cap paragraph.

CAUTION!
Driving with a hot engine cooling system could damage your vehicle. If the temperature gauge reads "H," pull over and stop the vehicle. Idle the vehicle with the air conditioner turned off until the pointer drops back into the normal range. If the pointer remains on the "H," turn the engine off immediately and call an authorized dealer for service.

INSTRUMENT CLUSTER DISPLAY

Your vehicle will be equipped with an instrument cluster display, which offers useful information to the driver. With the ignition in the STOP/OFF mode, opening/closing of a door will activate the display for viewing, and display the total miles, or kilometers, in the odometer. Your instrument cluster display is designed to display important information about your vehicle's systems and features. Using a driver interactive display located on the instrument panel, your instrument cluster display can show you how systems are working and give you warnings when they are not. The steering wheel mounted controls allow you to scroll through the main menus and submenus. You can access the specific information you want and make selections and adjustments.

Instrument Cluster Display Controls

The instrument cluster display features a driver-interactive display that is located in the instrument cluster.

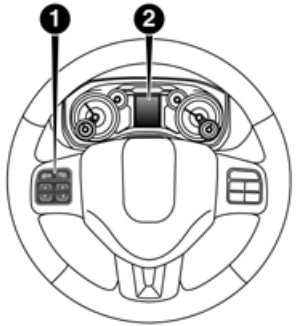

0402144865US

Base Instrument Cluster Display

1 – Instrument Cluster Display Controls
2 – Instrument Cluster Display Screen

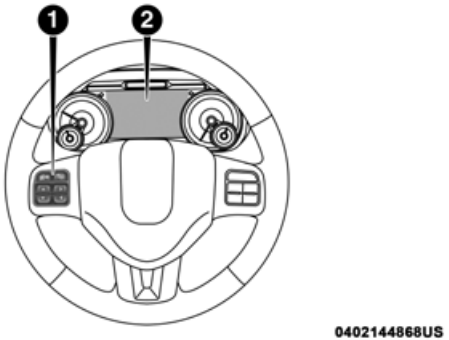

Premium Instrument Cluster Display

1 – Instrument Cluster Display Controls
2 – Instrument Cluster Display Screen

The instrument cluster display menu items may consist of the following:

- Speedometer
- Vehicle Info
- Driver Assist — If Equipped
- Fuel Economy
- Trip
- Trailer Tow
- Audio
- Stored Messages
- Screen Set Up
- Commercial Settings — If Equipped

The system allows the driver to select information by pushing the following instrument cluster display control buttons located on the left side of the steering wheel:

0402117821US

Instrument Cluster Display Control Buttons

△ **•Up Arrow Button**

Push and release the **up** arrow button to scroll upward through the main menu items, submenu screen, and vehicle settings.

▽ **•Down Arrow Button**

Push and release the **down** arrow button to scroll downward through the main menu items, submenu screen, and vehicle settings.

▷ **•Right Arrow Button**

Push and release the **right** arrow button to access/select the information screens or submenu screens of a main menu item. Push and hold the RIGHT arrow button for two seconds to reset displayed/selected features that can be reset.

◁ **•Left Arrow Button**

Push and release the **left** arrow button to access/select the information screens, submenu screens of a main menu item, or to return to the main menu.

Oil Life Reset

Your vehicle is equipped with an engine oil change indicator system. The "Oil Change Required" message will display in the instrument cluster display after a single chime has sounded, to indicate the next scheduled oil change interval. The engine oil change indicator system is duty cycle based, which means the engine oil change interval may fluctuate, dependent upon your personal driving style.

NOTE:
Use the steering wheel instrument cluster display controls for the following procedure.

Oil Life Reset Procedure

1. Without pushing the brake pedal, push the ENGINE START/STOP button and place the ignition to the ON/RUN position (do not start the engine).
2. Push and release the **down** arrow button to scroll downward through the main menu to "Vehicle Info."
3. Push and release the **right** arrow button to access the "Vehicle Info" screen, then scroll up or down to select "Oil Life."
4. Push and hold the **right** arrow button to select "Reset".
5. Push and release the **down** arrow button to select "Yes," then push and release the **right** arrow button to reset the Oil Life to 100%.
6. Push and release the **up** arrow button to exit the instrument cluster display screen.

Secondary Method Of Resetting Engine Oil Life

1. Without pressing the brake pedal, push the ENGINE START/STOP button and place the ignition to the ON/RUN position (do not start the engine).
2. Fully press the accelerator pedal, slowly, three times within ten seconds.
3. Without pushing the brake pedal, push the ENGINE START/STOP button once to return the ignition to the OFF/LOCK position.

NOTE:
If the indicator message illuminates when you start the vehicle, the oil change indicator system did not reset. If necessary, repeat this procedure.

Display Menu Items

Push and release the **up** or **down** arrow button until the desired selectable menu icon is highlighted in the instrument cluster display.

Speedometer

Push and release the **up** or **down** arrow button until the speedometer menu item is highlighted in the instrument cluster display. Push and release the **right** arrow button to cycle the display between mph and km/h.

Vehicle Info

Push and release the **up** or **down** arrow button until the Vehicle Info menu item is highlighted in the instrument cluster display. Push and release the **right** arrow button to enter the submenus items of Vehicle Info. Follow the directional prompts to access or reset any of the following Vehicle Info submenu items:

- Tire Pressure
- Coolant Temperature — If Equipped
- Transmission Temperature — If Equipped
- Oil Temperature — If Equipped
- Oil Pressure
- Exhaust Brake — If Equipped
- Turbo Boost — If Equipped
- Oil Life
- Fuel Filter Life — If Equipped
- Battery Voltage
- Gauge Summary — If Equipped
- Engine Hours

Driver Assist — If Equipped

The Driver Assist menu displays the status of the ACC system.

Push and release the **up** or **down** arrow button until the Driver Assist menu is displayed in the instrument cluster display.

Adaptive Cruise Control (ACC) Feature

The instrument cluster display displays the current ACC system settings. The information displayed depends on ACC system status.

Push the Adaptive Cruise Control (ACC) on/off button (located on the steering wheel) until one of the following displays in the instrument cluster display:

Adaptive Cruise Control Off

When ACC is deactivated, the display will read "Adaptive Cruise Control Off."

Adaptive Cruise Control Ready

When ACC is activated but the vehicle speed setting has not been selected, the display will read "Adaptive Cruise Control Ready."

Push the SET + or the SET- button (located on the steering wheel) and the following will display in the instrument cluster display:

ACC SET

When ACC is set, the set speed will display in the instrument cluster.

The ACC screen may display once again if any ACC activity occurs, which may include any of the following:

- Distance Setting Change
- System Cancel
- Driver Override
- System Off
- ACC Proximity Warning
- ACC Unavailable Warning

For further information, refer to "Adaptive Cruise Control (ACC) — If Equipped" in "Starting And Operating."

Fuel Economy

Push and release the **up** or **down** arrow button until the Fuel Economy menu item is highlighted in the instrument cluster display. Push and Hold the **right** arrow button to reset Average Fuel Economy.

- Current Fuel Economy Gauge
- Average Fuel Economy Value
- Range To Empty

Trip A/Trip B

Push and release the **up** or **down** arrow button until the Trip menu item is highlighted in the instrument cluster display. Push and release the **right** arrow button to enter the submenus of Trip A and Trip B. The Trip A or Trip B information will display the following:

- Distance
- Average Fuel Economy
- Elapsed Time

Push and hold **right** arrow button to reset all information.

Trailer Tow

Push and release the **up** or **down** arrow button until the Trailer Tow menu item is highlighted in the instrument cluster display. Push and release the **right** arrow button and the next screen will display the following trailer trip information:

- Trip (trailer specific) Distance: Push and hold the **right** arrow button to reset the distance.
- Trailer Brake
  - Output
  - Type
  - Gain
- Trailer Tire Pressure — If Equipped

Audio

Push and release the **up** or **down** arrow button until the Audio Menu icon/title is highlighted in the instrument cluster display. This menu will display the audio source information, including the Song name, Artist name, and audio source with an accompanying graphic.

Phone Call Status

When a call is incoming, a Phone Call Status pop-up will display on the screen. The pop-up will remain until the phone is answered or ignored.

NOTE:
The call status will temporarily replace the previous media source information displayed on the screen. When the pop-up is no longer displayed, the display will return to the last used screen.

Stored Messages

Push and release the **up** or **down** arrow button until the Messages Menu item is highlighted. This feature shows the number of stored warning messages. Push and release the **right** or **left** arrow buttons to cycle through stored messages.

Screen Setup Menu Item

Push and release the **up** or **down** arrow button until the Screen Setup menu item is highlighted in the instrument cluster display. Push and release the **right** arrow button to enter the Screen Setup submenu. The Screen Setup feature allows you to change what information is displayed in the instrument cluster as well as the location that information is displayed.

Current Gear

- Off (Default Setting)
- On

Odometer

- Unit Without Decimal (Default Setting)
- Unit With Decimal

Favorite Menu

- Speedometer
- Vehicle Info
- Driver Assist (Show/Hide) — If Equipped
- Fuel Economy (Show/Hide)
- Trip Info (Show/Hide)
- Trailer Tow (Show/Hide)
- Audio (Show/Hide)
- Messages
- Screen Setup
- Commercial Settings — If Equipped

NOTE:
Menus with (Show/Hide) can push the **OK** button to choose whether to show or hide this menu in the instrument cluster display.

Upper Left

- None
- Compass (Default Setting) — If Equipped
- Outside Temp — If Equipped
- Time
- Range To Empty
- Average MPG
- Current MPG
- Trip A Distance
- Trip B Distance
- Trailer Trip — If Equipped
- Trailer Brake — If Equipped
- Oil Pressure — If Equipped
- Coolant Temperature — If Equipped
- Oil Temperature — If Equipped
- Battery Voltage — If Equipped
- Transmission Temperature — If Equipped
- Oil Life — If Equipped
- Exhaust Brake — If Equipped
- Turbo Boost — If Equipped
- Fuel Filter Life — If Equipped

Upper Center

- None
- Compass
- Outside Temp
- Time
- Range To Empty
- Average MPG
- Current MPG
- Trip A Distance
- Trip B Distance
- Trailer Trip
- Audio
- Speedometer (Default Setting)
- Menu Title

Upper Right

- None
- Compass — If Equipped
- Outside Temp (Default Setting) — If Equipped
- Time
- Range To Empty
- Average MPG
- Current MPG
- Trip A Distance
- Trip B Distance
- Trailer Trip — If Equipped
- Trailer Brake — If Equipped
- Oil Pressure — If Equipped
- Coolant Temperature — If Equipped
- Oil Temperature — If Equipped
- Battery Voltage — If Equipped
- Transmission Temperature — If Equipped
- Oil Life — If Equipped
- Exhaust Brake — If Equipped
- Turbo Boost — If Equipped
- Fuel Filter Life — If Equipped

Left Side — If Equipped

- None
- Range
- Average MPG
- Menu Icon (Default Setting)
- Coolant Temperature
- Oil Temperature
- Transmission Temperature
- Oil Life
- Fuel Filter Life — If Equipped

Right Side — If Equipped

- None
- Range (Default Setting)
- Average MPG
- Menu Icon
- Coolant Temperature
- Oil Temperature
- Transmission Temperature
- Oil Life
- Fuel Filter Life — If Equipped

Lower Left — If Equipped

- None
- Compass
- Outside Temp
- Time
- Range To Empty
- Average MPG
- Current MPG
- Trip A Distance
- Trip B Distance
- Trailer Trip
- Trailer Brake
- Oil Pressure
- Coolant Temperature
- Oil Temperature
- Battery Voltage (Default Setting)
- Transmission Temperature
- Oil Life
- Exhaust Brake — If Equipped
- Turbo Boost — If Equipped
- Fuel Filter Life — If Equipped

Lower Right — If Equipped

- None
- Compass
- Outside Temp
- Time
- Range To Empty
- Average MPG
- Current MPG
- Trip A Distance
- Trip B Distance
- Trailer Trip
- Trailer Brake
- Oil Pressure (Default Setting)
- Coolant Temperature
- Oil Temperature
- Battery Voltage
- Transmission Temperature
- Oil Life
- Exhaust Brake — If Equipped
- Turbo Boost — If Equipped
- Fuel Filter Life — If Equipped

Restore Defaults

- Cancel (Default Setting)
- Ok

Commercial Settings — If Equipped

Commercial Settings allows the driver to set and recall additional features when the transmission is in PARK.

Push and release the **up** and **down** button until Commercial Settings displays in the instrument cluster display.

Follow the prompts to enter the required PIN and enter the Commercial Settings submenu.

Commercial Settings allows you to access the following features:

- PTO — If Equipped
- Remote Ignition
- Idle Control
- Backup Alarm
- Commercial ParkSense — If Equipped
- Aux Switches
- PIN Setup

NOTE:
If the vehicle's PIN is forgotten or not known, see an authorized dealer to have the PIN reset.

Battery Saver On/Battery Saver Mode Message — Electrical Load Reduction Actions — If Equipped

This vehicle is equipped with an Intelligent Battery Sensor (IBS) to perform additional monitoring of the electrical system and status of the vehicle battery.

In cases when the IBS detects charging system failure, or the vehicle battery conditions are deteriorating, electrical load reduction actions will take place to extend the driving time and distance of the vehicle. This is done by reducing power to or turning off non-essential electrical loads.

Load reduction is only active when the engine is running. It will display a message if there is a risk of battery depletion to the point where the vehicle may stall due to lack of electrical supply, or will not restart after the current drive cycle.

When load reduction is activated, the message "Battery Saver On Some Systems May Have Reduced Power" will appear in the instrument cluster.

These messages indicate the vehicle battery has a low state of charge and continues to lose electrical charge at a rate that the charging system cannot sustain.

NOTE:

- The charging system is independent from load reduction. The charging system performs a diagnostic on the charging system continuously.
- If the Battery Charge Warning Light is on it may indicate a problem with the charging system. Refer to "Battery Charge Warning Light" in "Getting To Know Your Instrument Panel" for further information.

The electrical loads that may be switched off (if equipped), and vehicle functions which can be affected by load reduction:

- Heated Seats/Vented Seats/Heated Wheel
- Rear Defroster And Heated Mirrors
- HVAC System
- 115V AC Power Inverter System
- Audio and Telematics System

Loss of the battery charge may indicate one or more of the following conditions:

- The charging system cannot deliver enough electrical power to the vehicle system because the electrical loads are larger than the capability of charging system. The charging system is still functioning properly.
- Turning on all possible vehicle electrical loads (e.g. HVAC to max settings, exterior and interior lights, overloaded power outlets +12V, 115V AC, USB ports) during certain driving conditions (city driving, towing, frequent stopping).
- Installing options like additional lights, upfitter electrical accessories, audio systems, alarms and similar devices.
- Unusual driving cycles (short trips separated by long parking periods).
- The vehicle was parked for an extended period of time (weeks, months).
- The battery was recently replaced and was not charged completely.
- The battery was discharged by an electrical load left on when the vehicle was parked.
- The battery was used for an extended period with the engine not running to supply radio, lights, chargers, +12V portable appliances like vacuum cleaners, game consoles and similar devices.

What to do when an electrical load reduction action message is present ("Battery Saver On" or "Battery Saver Mode")

During a trip:

- Reduce power to unnecessary loads if possible:
  - Turn off redundant lights (interior or exterior).
  - Check what may be plugged in to power outlets +12V, 115V AC, USB ports.
  - Check HVAC settings (blower, temperature).
  - Check the audio settings (volume).

After a trip:

- Check if any aftermarket equipment was installed (additional lights, upfitter electrical accessories, audio systems, alarms) and review specifications if any (load and Ignition Off Draw currents).
- Evaluate the latest driving cycles (distance, driving time and parking time).
- The vehicle should have service performed if the message is still present during consecutive trips and the evaluation of the vehicle and driving pattern did not help to identify the cause.

WARNING LIGHTS AND MESSAGES

The warning/indicator lights will illuminate in the instrument panel together with a dedicated message and/or acoustic signal when applicable. These indications are indicative and precautionary and as such must not be considered as exhaustive. Always refer to the information in this chapter in the event of a failure indication. All active telltales will display first if applicable. The system check menu may appear different based upon equipment options and current vehicle status. Some telltales are optional and may not appear.

Red Warning Lights

— Seat Belt Reminder Warning Light

This warning light indicates when the driver or passenger seat belt is unbuckled. When the ignition is first placed in the ON/RUN or ACC/ON/RUN position and if the driver's seat belt is unbuckled, a chime will sound and the light will turn on. When driving, if the driver or front passenger seat belt remains unbuckled, the Seat Belt Reminder Light will flash or remain on continuously and a chime will sound.

Refer to "Occupant Restraint Systems" in "Safety" for further information.

— Air Bag Warning Light

This warning light will illuminate to indicate a fault with the air bag, and will turn on for four to eight seconds as a bulb check when the ignition is placed in the ON/RUN or ACC/ON/RUN position. This light will illuminate with a single chime when a fault with the air bag has been detected, it will stay on until the fault is cleared. If the light is either not on during startup, stays on, or turns on while driving, have the system inspected at an authorized dealer as soon as possible.

BRAKE — Brake Warning Light

This warning light monitors various brake functions, including brake fluid level and parking brake application. If the brake light turns on it may indicate that the parking brake is applied, that the brake fluid level is low, or that there is a problem with the anti-lock brake system reservoir.

If the light remains on when the parking brake has been disengaged, and the fluid level is at the full mark on the master cylinder reservoir, it indicates a possible brake hydraulic system malfunction or that a problem with the Brake Booster has been detected by the Anti-Lock Brake System (ABS) / Electronic Stability Control (ESC) system. In this case, the light will remain on until the condition has been corrected. If the problem is related to the brake booster, the ABS pump will run when applying the brake, and a brake pedal pulsation may be felt during each stop.

The dual brake system provides a reserve braking capacity in the event of a failure to a portion of the hydraulic system. A leak in either half of the dual brake system is indicated by the Brake Warning Light, which will turn on when the brake fluid level in the master cylinder has dropped below a specified level.

The light will remain on until the cause is corrected.

NOTE:
The light may flash momentarily during sharp cornering maneuvers, which change fluid level conditions. The vehicle should have service performed, and the brake fluid level checked.

If brake failure is indicated, immediate repair is necessary.

WARNING!
Driving a vehicle with the red brake light on is dangerous. Part of the brake system may have failed. It will take longer to stop the vehicle. You could have a collision. Have the vehicle checked immediately.

Vehicles equipped with the Anti-Lock Brake System (ABS) are also equipped with Electronic Brake Force Distribution (EBD). In the event of an EBD failure, the Brake Warning Light will turn on along with the ABS Light. Immediate repair to the ABS system is required.

Operation of the Brake Warning Light can be checked by turning the ignition switch from the OFF position to the ON/RUN position. The light should illuminate for approximately two seconds. The light should then turn off unless the parking brake is applied or a brake fault is detected. If the light does not illuminate, have the light inspected by an authorized dealer.

The light also will turn on when the parking brake is applied with the ignition switch in the ON/RUN position.

NOTE:
This light shows only that the parking brake is applied. It does not show the degree of brake application.

— Hood Open Warning Light

This warning light will illuminate when the hood is ajar/open and not fully closed.

NOTE:
If the vehicle is moving, there will also be a single chime.

● — Vehicle Security Warning Light — If Equipped

This light will flash at a fast rate for approximately 15 seconds when the vehicle security alarm is arming, and then will flash slowly until the vehicle is disarmed.

— Engine Coolant Temperature Warning Light

This warning light warns of an overheated engine condition. If the engine coolant temperature is too high, this indicator will illuminate and a single chime will sound. If the temperature reaches the upper limit, a continuous chime will sound for four minutes or until the engine is able to cool: whichever comes first.

If the light turns on while driving, safely pull over and stop the vehicle. If the A/C system is on, turn it off. Also, shift the transmission into NEUTRAL and idle the vehicle. If the temperature reading does not return to normal, turn the engine off immediately and call for service.

Refer to “If Your Engine Overheats” in “In Case Of Emergency” for further information.

— Battery Charge Warning Light

This warning light will illuminate when the battery is not charging properly. If it stays on while the engine is running, there may be a malfunction with the charging system. Contact an authorized dealer as soon as possible.

This indicates a possible problem with the electrical system or a related component.

— Oil Pressure Warning Light

This warning light will illuminate to indicate low engine oil pressure. If the light turns on while driving, stop the vehicle, shut off the engine as soon as possible, and contact an authorized dealer. A chime will sound when this light turns on.

Do not operate the vehicle until the cause is corrected. This light does not indicate how much oil is in the engine. The engine oil level must be checked under the hood.

— Oil Temperature Warning Light

This warning light will illuminate to indicate the engine oil temperature is high. If the light turns on while driving, stop the vehicle and shut off the engine as soon as possible. Wait for oil temperature to return to normal levels.

— Electronic Throttle Control (ETC) Warning Light

This warning light will illuminate to indicate a problem with the Electronic Throttle Control (ETC) system. If a problem is detected while the vehicle is running, the light will either stay on or flash depending on the nature of the problem. Cycle the ignition when the vehicle is safely and completely stopped and the transmission is placed in the PARK position. The light should turn off. If the light remains on with the vehicle running, your vehicle will usually be drivable; however, see an authorized dealer for service as soon as possible.

NOTE:
This light may turn on if the accelerator and brake pedals are pressed at the same time.

If the light continues to flash when the vehicle is running, immediate service is required and you may experience reduced performance, an elevated/rough idle, or engine stall and your vehicle may require towing. The light will come on when the ignition is placed in the ON/RUN or ACC/ON/RUN position and remain on briefly as a bulb check. If the light does not come on during starting, have the system checked by an authorized dealer.

— Electric Power Steering Fault Warning Light

This warning light will turn on when there's a fault with the EPS (Electric Power Steering) system. Refer to "Power Steering" in "Starting And Operating" for further information.

WARNING!
Continued operation with reduced assist could pose a safety risk to yourself and others. Service should be obtained as soon as possible.

— Trailer Brake Disconnected Warning Light

This warning light will illuminate when the Trailer Brake has been disconnected.

— Transmission Temperature Warning Light — If Equipped

This warning light will illuminate to warn of a high transmission fluid temperature. This may occur with strenuous usage such as trailer towing. If this light turns on, stop the vehicle and run the engine at idle or slightly faster, with the transmission in PARK or NEUTRAL, until the light turns off. Once the light turns off, you may continue to drive normally.

WARNING!
If you continue operating the vehicle when the Transmission Temperature Warning Light is illuminated you could cause the fluid to boil over, come in contact with hot engine or exhaust components and cause a fire.

CAUTION!
Continuous driving with the Transmission Temperature Warning Light illuminated will eventually cause severe transmission damage or transmission failure.

— Door Open Warning Light

This indicator will illuminate when a door is ajar/open and not fully closed.

NOTE:
If the vehicle is moving there will also be a single chime.

Yellow Warning Lights

— Adaptive Cruise Control (ACC) Fault Warning Light — If Equipped

This warning light will illuminate to indicate a fault in the ACC system. Contact a local authorized dealer for service.

For further information, refer to "Adaptive Cruise Control (ACC)" in "Starting And Operating."

— Air Suspension Fault Warning Light — If Equipped

This light will illuminate when a fault is detected with the air suspension system.

— Engine Check/Malfunction Indicator Warning Light (MIL)

The Engine Check/Malfunction Indicator Light (MIL) is a part of an Onboard Diagnostic System called OBD II that monitors engine and automatic transmission control systems. This warning light will illuminate when the ignition is in the ON/RUN position before engine start. If the bulb does not come on when turning the ignition switch from OFF to ON/RUN, have the condition checked promptly.

Certain conditions, such as a loose or missing gas cap, poor quality fuel, etc., may illuminate the light after engine start. The vehicle should be serviced if the light stays on through several typical driving styles. In most situations, the vehicle will drive normally and will not require towing.

When the engine is running, the MIL may flash to alert serious conditions that could lead to immediate loss of power or severe catalytic converter damage. The vehicle should be serviced by an authorized dealer as soon as possible if this occurs.

WARNING!
A malfunctioning catalytic converter, as referenced above, can reach higher temperatures than in normal operating conditions. This can cause a fire if you drive slowly or park over flammable substances such as dry plants, wood, cardboard, etc. This could result in death or serious injury to the driver, occupants or others.

CAUTION!
Prolonged driving with the Malfunction Indicator Light (MIL) on could cause damage to the vehicle control system. It also could affect fuel economy and driveability. If the MIL is flashing, severe catalytic converter damage and power loss will soon occur. Immediate service is required.

— Electronic Stability Control (ESC) Active Warning Light — If Equipped

This warning light will indicate when the Electronic Stability Control system is Active. The "ESC Indicator Light" in the instrument cluster will come on when the ignition is placed in the ON/RUN or ACC/ON/RUN position, and when ESC is activated. It should go out with the engine running. If the "ESC Indicator Light" comes on continuously with the engine running, a malfunction has been detected in the ESC system. If this warning light remains on after several ignition cycles, and the vehicle has been driven several miles (kilometers) at speeds greater than 30 mph (48 km/h), see an authorized dealer as soon as possible to have the problem diagnosed and corrected.

- The "ESC Off Indicator Light" and the "ESC Indicator Light" come on momentarily each time the ignition is placed in the ON/RUN or ACC/ON/RUN position.
- The ESC system will make buzzing or clicking sounds when it is active. This is normal; the sounds will stop when ESC becomes inactive.
- This light will come on when the vehicle is in an ESC event.

— Electronic Stability Control (ESC) Off Warning Light — If Equipped

This warning light indicates the Electronic Stability Control (ESC) is off.

Each time the ignition is turned to ON/RUN or ACC/ON/RUN, the ESC system will be on, even if it was turned off previously.

— Low Washer Fluid Warning Light — If Equipped

This warning light will illuminate when the windshield washer fluid is low.

— Low Fuel Warning Light

When the fuel level reaches approximately 3.2 gal (12 L) this light will turn on, and remain on until fuel is added.

A single warning chime will sound with Low Fuel Warning.

— Low Coolant Level Warning Light

This telltale will turn on to indicate the vehicle coolant level is low.

(!) — Tire Pressure Monitoring System (TPMS) Warning Light

The warning light switches on and a message is displayed to indicate that the tire pressure is lower than the recommended value and/or that slow pressure loss is occurring. In these cases, optimal tire duration and fuel consumption may not be guaranteed.

Should one or more tires be in the condition mentioned above, the display will show the indications corresponding to each tire.

CAUTION!
Do not continue driving with one or more flat tires as handling may be compromised. Stop the vehicle, avoiding sharp braking and steering. If a tire puncture occurs, repair immediately using the dedicated tire repair kit and contact an authorized dealer as soon as possible.

Each tire, including the spare (if provided), should be checked monthly when cold and inflated to the inflation pressure recommended by the vehicle manufacturer on the vehicle placard or tire inflation pressure label. (If your vehicle has tires of a different size than the size indicated on the vehicle placard or tire inflation pressure label, you should determine the proper tire inflation pressure for those tires.)

As an added safety feature, your vehicle has been equipped with a Tire Pressure Monitoring System (TPMS) that illuminates a low tire pressure telltale when one or more of your tires is significantly under-inflated. Accordingly, when the low tire pressure telltale illuminates, you should stop and check your tires as soon as possible, and inflate them to the proper pressure. Driving on a significantly under-inflated tire causes the tire to overheat and can lead to tire failure.

Under-inflation also reduces fuel efficiency and tire tread life, and may affect the vehicle's handling and stopping ability.

Please note that the TPMS is not a substitute for proper tire maintenance, and it is the driver's responsibility to maintain correct tire pressure, even if under-inflation has not reached the level to trigger illumination of the TPMS low tire pressure telltale.

Your vehicle has also been equipped with a TPMS malfunction indicator to indicate when the system is not operating properly. The TPMS malfunction indicator is combined with the low tire pressure telltale. When the system detects a malfunction, the telltale will flash for approximately one minute and then remain continuously illuminated. This sequence will continue upon subsequent vehicle start-ups as long as the malfunction exists. When the malfunction indicator is illuminated, the system may not be able to detect or signal low tire pressure as intended. TPMS malfunctions may occur for a variety of reasons, including the installation of replacement or alternate tires or wheels on the vehicle that prevent the TPMS from functioning properly. Always check the TPMS malfunction telltale after replacing one or more tires or wheels on your vehicle to ensure that the replacement or alternate tires and wheels allow the TPMS to continue to function properly.

CAUTION!

The TPMS has been optimized for the original equipment tires and wheels. TPMS pressures and warning have been established for the tire size equipped on your vehicle. Undesirable system operation or sensor damage may result when using replacement equipment that is not of the same size, type, and/or style. Aftermarket wheels can cause sensor damage. Using aftermarket tire sealants may cause the Tire Pressure Monitoring System (TPMS) sensor to become inoperable. After using an aftermarket tire sealant it is recommended that you take your vehicle to your authorized dealer to have your sensor function checked.

(ABS) — Anti-Lock Brake (ABS) Warning Light

This warning light monitors the Anti-Lock Brake System (ABS). The light will turn on when the ignition is placed in the ON/RUN or ACC/ON/RUN position and may stay on for as long as four seconds.

If the ABS light remains on or turns on while driving, then the Anti-Lock portion of the brake system is not functioning and service is required as soon as possible. However, the conventional brake system will continue to operate normally, assuming the Brake Warning Light is not also on.

If the ABS light does not turn on when the ignition is placed in the ON/RUN or ACC/ON/RUN position, have the brake system inspected by an authorized dealer.

! — Rear Axle Locker Fault Indicator Light — If Equipped

This warning light will illuminate to indicate when a rear axle locker fault has been detected.

! — Service Forward Collision Warning (FCW) Light — If Equipped

This warning light will illuminate to indicate a fault in the Forward Collision Warning System. Contact an authorized dealer for service.

Refer to "Forward Collision Warning (FCW)" in "Safety" for further information.

SERV 4WD — Service 4WD Warning Light — If Equipped

This warning light will illuminate to signal a fault with the 4WD system. If the light stays on or comes on during driving, it means that the 4WD system is not functioning properly and that service is required. We recommend you drive to the nearest service center and have the vehicle serviced immediately.

! — Speed Control Fault Warning Light

This warning light will illuminate to indicate the Speed Control System is not functioning properly and service is required. Contact an authorized dealer.

SWAY BAR ! — Sway Bar Fault Warning Light

This light will illuminate when there is a fault in the sway bar disconnect system.

Yellow Indicator Lights

OFF — Forward Collision Warning Off Indicator Light — If Equipped

This indicator light illuminates to indicate that Forward Collision Warning is off.

— Air Suspension Payload Protection Indicator Light — If Equipped

This indicator light will illuminate to indicate that the maximum payload may have been exceeded or load leveling cannot be achieved at its current ride height. Protection Mode will automatically be selected in order to “protect” the air suspension system, air suspension adjustment is limited due to payload.

TOW/HAUL — TOW/HAUL Indicator Light

This indicator light will illuminate when TOW / HAUL mode is selected.

— Cargo Light — If Equipped

This indicator light will illuminate when the cargo light is activated by pushing the cargo light button on the headlight switch.

SWAY BAR — Sway Bar Indicator Light — If Equipped

This indicator light will illuminate when the front sway bar is disconnected.

— Snowplow Mode Indicator Light — If Equipped

This indicator light will illuminate when Snowplow Mode has been activated.

/ ALT TRAILER HEIGHT — Air Suspension Alternate Trailer Height Indicator Light— If Equipped

This light will illuminate when the air suspension system is set to the Alternate Trailer Height setting.

/ BED LOW — Air Suspension Bed Lowering Mode Indicator Light— If Equipped

This light will illuminate when the Bed Lowering Mode procedure is complete.

/ RAISING — Air Suspension Ride Height Raising Indicator Light— If Equipped

This light will blink and alert the driver that the vehicle is changing to a higher ride height.

/ LOWERING — Air Suspension Ride Height Lowering Indicator Light— If Equipped

This light will blink and alert the driver that the vehicle is changing to a lower ride height.

— Front And Rear Axle Lock Indicator Light

This light indicates when the front, rear, or both axles have been locked. The telltale will display the lock icon on the front and rear axles to indicate the current lock status.

— Rear Axle Lock Indicator Light

This light indicates when the rear axle lock has been activated.

4WD LOCK — 4WD Lock Indicator Light

This light alerts the driver that the vehicle is in the four-wheel drive LOCK mode. The front and rear driveshafts are mechanically locked together, forcing the front and rear wheels to rotate at the same speed.

Refer to “Four-Wheel Drive Operation” in “Starting And Operating” for further information on four-wheel drive operation and proper use.

4WD LOW — 4WD Low Indicator Light — If Equipped

This light alerts the driver that the vehicle is in the four-wheel drive LOW mode. The front and rear driveshafts are mechanically locked together forcing the front and rear wheels to rotate at the same speed. Low range provides a greater gear reduction ratio to provide increased torque at the wheels.

Refer to “Four-Wheel Drive Operation — If Equipped” in “Starting And Operating” for further information on four-wheel drive operation and proper use.

4WD HIGH — 4WD High Indicator Light — If Equipped

This light alerts the driver that the vehicle is in the four-wheel drive HIGH mode. The front and rear driveshafts are mechanically locked together forcing the front and rear wheels to rotate at the same speed.

NEUTRAL — NEUTRAL Indicator Light — If Equipped

This light alerts the driver that the 4WD power transfer case is in the NEUTRAL mode and the front and rear driveshafts are disengaged from the powertrain.

Green Indicator Lights

— Adaptive Cruise Control (ACC) Set With Target Light — If Equipped

This will display when the ACC is set and a target vehicle is detected.

Refer to “Adaptive Cruise Control (ACC) — If Equipped” in “Starting And Operating” for further information.

— Adaptive Cruise Control (ACC) Set With No Target Detected Indicator Light — If Equipped

This light will turn on when the Adaptive Cruise Control is SET and there is no target vehicle detected.

Refer to "Adaptive Cruise Control (ACC) — If Equipped" in "Starting And Operating" for further information.

ECO — ECO Mode Indicator Light

This light will turn on when ECO Mode is active.

— Park/Headlight On Indicator Light

This indicator light will illuminate when the park lights or headlights are turned on.

— Front Fog Indicator Light — If Equipped

This indicator light will illuminate when the front fog lights are on.

— Turn Signal Indicator Lights

When the left or right turn signal is activated, the turn signal indicator will flash independently and the corresponding exterior turn signal lamps will flash. Turn signals can be activated when the multifunction lever is moved down (left) or up (right).

NOTE:

- A continuous chime will sound if the vehicle is driven more than 1 mile (1.6 km) with either turn signal on.
- Check for an inoperative outside light bulb if either indicator flashes at a rapid rate.
- If equipped with fog lamps, the fog lamp on the side of the activated turn signal will also illuminate to provide additional light when turning.

— Cruise Control Set Indicator Light — If Equipped

This indicator light will illuminate when the cruise control is set to the desired speed. Refer to “Speed Control” in “Starting And Operating” for further information.

White Indicator Lights

— Adaptive Cruise Control (ACC) Ready Light — If Equipped

This light will illuminate when the vehicle equipped with Adaptive Cruise Control (ACC) has been turned on but not set.

Refer to “Adaptive Cruise Control (ACC) — If Equipped” in “Starting And Operating” for further information.

— Cruise Control Ready Indicator

This indicator light will illuminate when the cruise control is ready, but not set. Refer to “Speed Control” in “Starting And Operating” for further information.

— Hill Descent Control (HDC) Indicator Light — If Equipped

This indicator shows when the Hill Descent Control (HDC) feature is turned on. The lamp will be on solid when HDC is armed. HDC can only be armed when the transfer case is in the “4WD LOW” position and the vehicle speed is less then 20 mph (32 km/h). If these conditions are not met while attempting to use the HDC feature, the HDC indicator light will flash on/off.

Blue Indicator Lights

— High Beam Indicator Light

This indicator light will illuminate to indicate that the high beam headlights are on. With the low beams activated, push the multifunction lever forward (toward the front of the vehicle) to turn on the high beams. Pull the multifunction lever rearward (toward the rear of the vehicle) to turn off the high beams. If the high beams are off, pull the lever toward you for a temporary high beam on, "flash to pass" scenario.

ONBOARD DIAGNOSTIC SYSTEM — OBD II

Your vehicle is equipped with a sophisticated Onboard Diagnostic system called OBD II. This system monitors the performance of the emissions, engine, and transmission control systems. When these systems are operating properly, your vehicle will provide excellent performance and fuel economy, as well as engine emissions well within current government regulations.

If any of these systems require service, the OBD II system will turn on the Malfunction Indicator Light (MIL). It will also store diagnostic codes and other information to assist your service technician in making repairs. Although your vehicle will usually be drivable and not need towing, see an authorized dealer for service as soon as possible.

CAUTION!

- **Prolonged driving with the MIL on could cause further damage to the emission control system. It could also affect fuel economy and driveability. The vehicle must be serviced before any emissions tests can be performed.**
- **If the MIL is flashing while the vehicle is running, severe catalytic converter damage and power loss will soon occur. Immediate service is required.**

Onboard Diagnostic System (OBD II) Cybersecurity

Your vehicle is required to have an Onboard Diagnostic system (OBD II) and a connection port to allow access to information related to the performance of your emissions controls. Authorized service technicians may need to access this information to assist with the diagnosis and service of your vehicle and emissions system.

WARNING!

- **ONLY an authorized service technician should connect equipment to the OBD II connection port in order to read the VIN, diagnose, or service your vehicle.**
- **If unauthorized equipment is connected to the OBD II connection port, such as a driver-behavior tracking device, it may:**
  - **Be possible that vehicle systems, including safety related systems, could be impaired or a loss of vehicle control could occur that may result in an accident involving serious injury or death.**
  - **Access, or allow others to access, information stored in your vehicle systems, including personal information.**

For further information, refer to “Cybersecurity” in “Multimedia”.

EMISSIONS INSPECTION AND MAINTENANCE PROGRAMS

In some localities, it may be a legal requirement to pass an inspection of your vehicle's emissions control system. Failure to pass could prevent vehicle registration.

For states that require an Inspection and Maintenance (I/M), this check verifies the “Malfunction Indicator Light (MIL)” is functioning and is not on when the engine is running, and that the OBD II system is ready for testing.

Normally, the OBD II system will be ready. The OBD II system may **not** be ready if your vehicle was recently serviced, recently had a dead battery or a battery replacement. If the OBD II system should be determined not ready for the I/M test, your vehicle may fail the test.

Your vehicle has a simple ignition actuated test, which you can use prior to going to the test station. To check if your vehicle's OBD II system is ready, you must do the following:

1. Cycle the ignition switch to the ON position, but do not crank or start the engine.

NOTE:
If you crank or start the engine, you will have to start this test over.

2. As soon as you cycle the ignition switch to the ON position, you will see the "Malfunction Indicator Light (MIL)" symbol come on as part of a normal bulb check.

3. Approximately 15 seconds later, one of two things will happen:

   - The MIL will flash for about ten seconds and then return to being fully illuminated until you turn OFF the ignition or start the engine. This means that your vehicle's OBD II system is **not ready** and you should **not** proceed to the I/M station.
   - The MIL will not flash at all and will remain fully illuminated until you place the ignition in the off position or start the engine. This means that your vehicle's OBD II system is **ready** and you can proceed to the I/M station.

If your OBD II system is **not ready,** you should see an authorized dealer or repair facility. If your vehicle was recently serviced or had a battery failure or replacement, you may need to do nothing more than drive your vehicle as you normally would in order for your OBD II system to update. A recheck with the above test routine may then indicate that the system is **now ready**.

Regardless of whether your vehicle's OBD II system is ready or not, if the MIL is illuminated during normal vehicle operation you should have your vehicle serviced before going to the I/M station. The I/M station can fail your vehicle because the MIL is on with the engine running.

SAFETY

SAFETY FEATURES

Anti-Lock Brake System (ABS)

The Anti-Lock Brake System (ABS) provides increased vehicle stability and brake performance under most braking conditions. The system automatically prevents wheel lock, and enhances vehicle control during braking.

The ABS performs a self-check cycle to ensure that the ABS is working properly each time the vehicle is started and driven. During this self-check, you may hear a slight clicking sound as well as some related motor noises.

ABS is activated during braking when the system detects one or more wheels begin to lock. Road conditions such as ice, snow, gravel, bumps, railroad tracks, loose debris, or panic stops may increase the likelihood of ABS activation(s).

You also may experience the following when ABS activates:

- The ABS motor noise (it may continue to run for a short time after the stop).
- The clicking sound of solenoid valves.
- Brake pedal pulsations.
- A slight drop of the brake pedal at the end of the stop.

These are all normal characteristics of ABS.

WARNING!

- **The ABS contains sophisticated electronic equipment that may be susceptible to interference caused by improperly installed or high output radio transmitting equipment. This interference can cause possible loss of anti-lock braking capability. Installation of such equipment should be performed by qualified professionals.**
- **Pumping of the Anti-Lock Brakes will diminish their effectiveness and may lead to a collision. Pumping makes the stopping distance longer. Just press firmly on your brake pedal when you need to slow down or stop.**

(Continued)

WARNING! *(Continued)*

- **The ABS cannot prevent the natural laws of physics from acting on the vehicle, nor can it increase braking or steering efficiency beyond that afforded by the condition of the vehicle brakes and tires or the traction afforded.**
- **The ABS cannot prevent collisions, including those resulting from excessive speed in turns, following another vehicle too closely, or hydroplaning.**
- **The capabilities of an ABS equipped vehicle must never be exploited in a reckless or dangerous manner that could jeopardize the user's safety or the safety of others.**

ABS is designed to function with the OEM tires. Modification may result in degraded ABS performance.

Anti-Lock Brake Warning Light

The yellow "Anti-Lock Brake Warning Light" will turn on when the ignition is turned to the ON/RUN mode and may stay on for as long as four seconds.

If the "Anti-Lock Brake Warning Light" remains on or comes on while driving, it indicates that the anti-lock portion of the brake system is not functioning and that service is required. However, the conventional brake system will continue to operate normally if the "Anti-Lock Brake Warning Light" is on.

If the "Anti-Lock Brake Warning Light" is on, the brake system should be serviced as soon as possible to restore the benefits of anti-lock brakes. If the "Anti-Lock Brake Warning Light" does not come on when the ignition is turned to the ON/RUN mode, have the light repaired as soon as possible.

Electronic Brake Control System

Your vehicle is equipped with an advanced Electronic Brake Control system (EBC). This system includes Electronic Brake Force Distribution (EBD), Anti-Lock Brake System (ABS), Brake Assist System (BAS), Hill Start Assist (HSA), Traction Control System (TCS), Electronic Stability Control (ESC), and Electronic Roll Mitigation (ERM). These systems work together to enhance both vehicle stability and control in various driving conditions.

Your vehicle may also be equipped with Trailer Sway Control (TSC) and Hill Descent Control (HDC).

Electronic Brake Force Distribution (EBD)

This function manages the distribution of the braking torque between the front and rear axles by limiting braking pressure to the rear axle. This is done to prevent overslip of the rear wheels to avoid vehicle instability, and to prevent the rear axle from entering ABS before the front axle.

Brake System Warning Light

The red "Brake System Warning Light" will turn on when the ignition is turned to the ON/RUN mode and may stay on for as long as four seconds.

If the "Brake System Warning Light" remains on or comes on while driving, it indicates that the brake system is not functioning properly and that immediate service is required. If the "Brake System Warning Light" does not come on when the ignition is turned to the ON/RUN mode, have the light repaired as soon as possible.

Brake Assist System (BAS)

The BAS is designed to optimize the vehicle's braking capability during emergency braking maneuvers. The system detects an emergency braking situation by sensing the rate and amount of brake application and then applies optimum pressure to the brakes. This can help reduce braking distances. The BAS complements the anti-lock brake system (ABS). Applying the brakes very quickly results in the best BAS assistance. To receive the benefit of the system, you must apply continuous braking pressure during the stopping sequence, (do not "pump" the brakes). Do not reduce brake pedal pressure unless braking is no longer desired. Once the brake pedal is released, the BAS is deactivated.

WARNING!
The Brake Assist System (BAS) cannot prevent the natural laws of physics from acting on the vehicle, nor can it increase the traction afforded by prevailing road conditions. BAS cannot prevent collisions, including those resulting from excessive speed in turns, driving on very slippery surfaces, or hydroplaning. The capabilities of a BAS-equipped vehicle must never be exploited in a reckless or dangerous manner, which could jeopardize the user's safety or the safety of others.

Hill Start Assist (HSA)

The HSA system is designed to mitigate roll back from a complete stop while on an incline. If the driver releases the brake while stopped on an incline, HSA will continue to hold the brake pressure for a short period. If the driver does not apply the throttle before this time expires, the system will release brake pressure and the vehicle will roll down the hill as normal.

The following conditions must be met in order for HSA to activate:

- The feature must be enabled.
- The vehicle must be stopped.
- Park brake must be off.
- Driver door must be closed.
- The vehicle must be on a sufficient grade.
- The gear selection must match vehicle uphill direction (i.e., vehicle facing uphill is in forward gear; vehicle backing uphill is in REVERSE gear).
- HSA will work in REVERSE gear and all forward gears. The system will not activate if the transmission is in PARK or NEUTRAL. For vehicles equipped with a manual transmission, if the clutch is pressed, HSA will remain active.

WARNING!
There may be situations where the Hill Start Assist (HSA) will not activate and slight rolling may occur, such as on minor hills or with a loaded vehicle, or while pulling a trailer. HSA is not a substitute for active driving involvement. It is always the driver's responsibility to be attentive to distance to other vehicles, people, and objects, and most importantly brake operation to ensure safe operation of the vehicle under all road conditions. Your complete attention is always required while driving to maintain safe control of your vehicle. Failure to follow these warnings can result in a collision or serious personal injury.

Towing With HSA

HSA will also provide assistance to mitigate roll back while towing a trailer.

WARNING!

- **If you use a trailer brake controller with your trailer, the trailer brakes may be activated and deactivated with the brake switch. If so, there may not be enough brake pressure to hold both the vehicle and the trailer on a hill when the brake pedal is released. In order to avoid rolling down an incline while resuming acceleration, manually activate the trailer brake or apply more vehicle brake pressure prior to releasing the brake pedal.**
- **HSA is not a parking brake. Always apply the parking brake fully when exiting your vehicle. Also, be certain to place the transmission in PARK.**
- **Failure to follow these warnings can result in a collision or serious personal injury.**

Disabling And Enabling HSA

This feature can be turned on or turned off. To change the current setting, proceed as follows:

- If disabling HSA using your instrument cluster display, refer to “Instrument Cluster Display” in “Getting To Know Your Instrument Panel” for further information.
- If disabling HSA using Uconnect Settings, refer to “Uconnect Settings” in “Multimedia” for further information.

For vehicles not equipped with an instrument cluster display, perform the following steps:

1. Center the steering wheel (front wheels pointing straight forward).
2. Shift the transmission into PARK.
3. Apply the parking brake.
4. Start the engine.
5. Rotate the steering wheel slightly more than one-half turn to the left.

6. Push the "ESC Off" button located in the lower switch bank below the climate control four times within 20 seconds. The "ESC Off Indicator Light" should turn on and turn off two times.

7. Rotate the steering wheel back to center and then an additional slightly more than one-half turn to the right.

8. Turn the ignition to the OFF mode and then back to ON. If the sequence was completed properly, the "ESC Off Indicator Light" will blink several times to confirm HSA is disabled.

9. Repeat these steps if you want to return this feature to its previous setting.

Traction Control System (TCS)

This system monitors the amount of wheel spin of each of the driven wheels. If wheel spin is detected, the TCS may apply brake pressure to the spinning wheel(s) and/or reduce engine power to provide enhanced acceleration and stability. A feature of the TCS, Brake Limited Differential (BLD), functions similar to a limited slip differential and controls the wheel spin across a driven axle. If one wheel on a driven axle is spinning faster than the other, the system will apply the brake of the spinning wheel. This will allow more engine power to be applied to the wheel that is not spinning. BLD may remain enabled even if TCS and ESC are in a reduced mode.

Electronic Stability Control (ESC)

This system enhances directional control and stability of the vehicle under various driving conditions. ESC corrects for oversteering or understeering of the vehicle by applying the brake of the appropriate wheel(s) to assist in counteracting the oversteer or understeer condition. Engine power may also be reduced to help the vehicle maintain the desired path.

ESC uses sensors in the vehicle to determine the vehicle path intended by the driver and compares it to the actual path of the vehicle. When the actual path does not match the intended path, ESC applies the brake of the appropriate wheel to assist in counteracting the oversteer or understeer condition.

- Oversteer — when the vehicle is turning more than appropriate for the steering wheel position.
- Understeer — when the vehicle is turning less than appropriate for the steering wheel position.

The "ESC Activation/Malfunction Indicator Light" located in the instrument cluster will start to flash as soon as the ESC system becomes active. The "ESC Activation/Malfunction Indicator Light" also flashes when the TCS is active. If the "ESC Activation/Malfunction Indicator Light" begins to flash during acceleration, ease up on the accelerator and apply as little throttle as possible. Be sure to adapt your speed and driving to the prevailing road conditions.

WARNING!

- **Electronic Stability Control (ESC) cannot prevent the natural laws of physics from acting on the vehicle, nor can it increase the traction afforded by prevailing road conditions. ESC cannot prevent accidents, including those resulting from excessive speed in turns, driving on very slippery surfaces, or hydroplaning. ESC also cannot prevent accidents resulting from loss of vehicle control due to inappropriate driver input for the conditions. Only a safe, attentive, and skillful driver can prevent accidents. The capabilities of an ESC equipped vehicle must never be exploited in a reckless or dangerous manner which could jeopardize the user's safety or the safety of others.**

(Continued)

WARNING! ***(Continued)***

- **Vehicle modifications, or failure to properly maintain your vehicle, may change the handling characteristics of your vehicle, and may negatively affect the performance of the ESC system. Changes to the steering system, suspension, braking system, tire type and size or wheel size may adversely affect ESC performance. Improperly inflated and unevenly worn tires may also degrade ESC performance. Any vehicle modification or poor vehicle maintenance that reduces the effectiveness of the ESC system can increase the risk of loss of vehicle control, vehicle rollover, personal injury and death.**

ESC Operating Modes

NOTE:
Depending upon model and mode of operation, the ESC system may have multiple operating modes.

ESC On

This is the normal operating mode for the ESC. Whenever the vehicle is started, the ESC system will be in this mode. This mode should be used for most driving conditions. Alternate ESC modes should only be used for specific reasons as noted in the following paragraphs.

Partial Off

The "Partial Off" mode is intended for times when a more spirited driving experience is desired. This mode may modify TCS and ESC thresholds for activation, which allows for more wheel spin than normally allowed. This mode may be useful if the vehicle becomes stuck.

To enter the "Partial Off" mode, momentarily push the "ESC Off" switch and the "ESC Off Indicator Light" will illuminate. To turn the ESC on again, momentarily push the "ESC Off" switch and the "ESC Off Indicator Light" will turn off.

NOTE:
For vehicles with multiple partial ESC modes a momentary button push will toggle the ESC mode. Multiple momentary button pushed may be required to return to ESC On.

WARNING!

- **When in "Partial Off" mode, the TCS functionality of ESC, (except for the limited slip feature described in the TCS section), has been disabled and the "ESC Off Indicator Light" will be illuminated. When in "Partial Off" mode, the engine power reduction feature of TCS is disabled, and the enhanced vehicle stability offered by the ESC system is reduced.**
- **Trailer Sway control (TSC) is disabled when the ESC system is in the "Partial Off" mode.**

Full Off — If Equipped

This mode is intended for off-highway or off-road use only and should not be used on any public roadways. In this mode, TCS and ESC features are turned OFF. To enter the "Full Off" mode, push and hold the "ESC Off" switch for five seconds while the vehicle is stopped with the engine running. After five seconds, a chime will sound, the "ESC Off Indicator Light" will illuminate, and the "ESC OFF" message will display in the instrument cluster. To turn ESC ON again, momentarily push the "ESC Off" switch.

NOTE:
System may switch from ESC "Full Off" to "Partial Off" mode when vehicle exceeds a predetermined speed. When the vehicle speed slows below the predetermined speed the system will return to ESC "Full Off".

ESC modes may also be affected by drive modes if so equipped.

WARNING!

- **In the ESC "Full Off" mode, the engine torque reduction and stability features are disabled. Therefore, enhanced vehicle stability offered by the ESC system is unavailable. In an emergency evasive maneuver, the ESC system will not engage to assist in maintaining stability. ESC "Full Off" mode is intended for off-highway or off-road use only.**
- **The Electronic Stability Control (ESC) cannot prevent the natural laws of physics from acting on the vehicle, nor can it increase the traction afforded by prevailing road conditions. ESC cannot prevent all accidents, including those resulting from excessive speed in turns, driving on very slippery surfaces, or hydroplaning. ESC also cannot prevent collisions.**

ESC Activation/Malfunction Indicator Light And ESC OFF Indicator Light

The "ESC Activation/Malfunction Indicator Light" in the instrument cluster will come on when the ignition is turned to the ON mode. It should go out with the engine running. If the "ESC Activation/Malfunction Indicator Light" comes on continuously with the engine running, a malfunction has been detected in the ESC system. If this light remains on after several ignition cycles, and the vehicle has been driven several miles (kilometers) at speeds greater than 30 mph (48 km/h), see an authorized dealer as soon as possible to have the problem diagnosed and corrected.

The "ESC Activation/Malfunction Indicator Light" (located in the instrument cluster) starts to flash as soon as the tires lose traction and the ESC system becomes active. The "ESC Activation/Malfunction Indicator Light" also flashes when TCS is active. If the "ESC Activation/Malfunction Indicator Light" begins to flash during acceleration, ease up on the accelerator and apply as little throttle as possible. Be sure to adapt your speed and driving to the prevailing road conditions.

NOTE:

- The "ESC Activation/Malfunction Indicator Light" and the "ESC OFF Indicator Light" come on momentarily each time the ignition is turned ON.
- Each time the ignition is turned ON, the ESC system will be on even if it was turned off previously.
- The ESC system will make buzzing or clicking sounds when it is active. This is normal; the sounds will stop when ESC becomes inactive following the maneuver that caused the ESC activation.

OFF

The "ESC OFF Indicator Light" indicates the customer has elected to have the Electronic Stability Control (ESC) in a reduced mode.

Electronic Roll Mitigation (ERM)

This system anticipates the potential for wheel lift by monitoring the driver's steering wheel input and the speed of the vehicle. When ERM determines that the rate of change of the steering wheel angle and vehicle's speed are sufficient to potentially cause wheel lift, it then applies the appropriate brake and may also reduce engine power to lessen the chance that wheel lift will occur. ERM can only reduce the chance of

wheel lift occurring during severe or evasive driving maneuvers; it cannot prevent wheel lift due to other factors, such as road conditions, leaving the roadway, or striking objects or other vehicles.

NOTE:
ERM is disabled anytime the ESC is in "Full Off" mode (if equipped). Refer to "Electronic Stability Control (ESC)" in this section for a complete explanation of the available ESC modes.

WARNING!
Many factors, such as vehicle loading, road conditions and driving conditions, influence the chance that wheel lift or rollover may occur. ERM cannot prevent all wheel lift or roll overs, especially those that involve leaving the roadway or striking objects or other vehicles. The capabilities of an ERM-equipped vehicle must never be exploited in a reckless or dangerous manner which could jeopardize the user's safety or the safety of others.

Trailer Sway Control (TSC)

TSC uses sensors in the vehicle to recognize an excessively swaying trailer and will take the appropriate actions to attempt to stop the sway. TSC will become active automatically once an excessively swaying trailer is recognized.

NOTE:
TSC cannot stop all trailers from swaying. Always use caution when towing a trailer and follow the trailer tongue weight recommendations. Refer to "Trailer Towing" in "Starting And Operating" for further information.

When TSC is functioning, the "ESC Activation/Malfunction Indicator Light" will flash, the engine power may be reduced and you may feel the brakes being applied to individual wheels to attempt to stop the trailer from swaying. TSC is disabled when the ESC system is in the "Partial Off" or "Full Off" modes.

WARNING!
If TSC activates while driving, slow the vehicle down, stop at the nearest safe location, and adjust the trailer load to eliminate trailer sway.

Hill Descent Control (HDC) — If Equipped

HDC is intended for low speed off road driving while in 4WD Low Range. HDC maintains vehicle speed while descending hills during various driving situations. HDC controls vehicle speed by actively controlling the brakes.

HDC Has Three States:

1. Off (feature is not enabled and will not activate).
2. Enabled (feature is enabled and ready but activation conditions are not met, or driver is actively overriding with brake or throttle application).
3. Active (feature is enabled and actively controlling vehicle speed).

Enabling HDC

HDC is enabled by pushing the HDC switch, but the following conditions must also be met to enable HDC:

- Driveline is in 4WD Low Range.
- Vehicle speed is below 5 mph (8 km/h).
- Parking brake is released.
- Driver door is closed.

Activating HDC

Once HDC is enabled it will activate automatically if driven down a grade of sufficient magnitude. The set speed for HDC is selectable by the driver, and can be adjusted by using the gear shift +/-. The following summarizes the HDC set speeds:

HDC Target Set Speeds

- P = No set speed. HDC may be enabled but will not activate.
- R = 0.6 mph (1 km/h)
- N = 1.2 mph (2 km/h)
- D = 0.6 mph (1 km/h)
- 1st = 0.6 mph (1 km/h)
- 2nd = 1.2 mph (2 km/h)
- 3rd = 1.8 mph (3 km/h)
- 4th = 2.5 mph (4 km/h)
- 5th = 3.1 mph (5 km/h)
- 6th = 3.7 mph (6 km/h)
- 7th = 4.3 mph (7 km/h)
- 8th = 5.0 mph (8 km/h)
- 9th = 5.6 mph (9 km/h) – If Equipped

NOTE:
During HDC the +/- shifter input is used for HDC target speed selection, but will not affect the gear chosen by the transmission. When actively controlling HDC the transmission will shift appropriately for the driver-selected set speed and corresponding driving conditions.

Driver Override

The driver may override HDC activation with throttle or brake application at anytime.

Deactivating HDC

HDC will be deactivated but remain available if any of the following conditions occur:

- Driver overrides HDC set speed with throttle or brake application.
- Vehicle speed exceeds 20 mph (32 km/h) but remains below 40 mph (64 km/h).
- Vehicle is on a downhill grade of insufficient magnitude, is on level ground, or is on an uphill grade.
- Vehicle is shifted to park.

Disabling HDC

HDC will be deactivated and disabled if any of the following conditions occur:

- The driver pushes the HDC switch.
- The driveline is shifted out of 4WD Low Range.
- The parking brake is applied.
- Driver door opens.
- The vehicle is driven greater than 20 mph (32 km/h) for greater than 70 seconds.
- The vehicle is driven greater than 40 mph (64 km/h) (HDC exits immediately).
- HDC detects excessive brake temperature.

Feedback To The Driver

The instrument cluster has an HDC icon and the HDC switch has an LED icon, which offers feedback to the driver about the state HDC is in.

- The cluster icon and switch lamp will illuminate and remain on solid when HDC is enabled or activated. This is the normal operating condition for HDC.
- The cluster icon and switch lamp will flash for several seconds then extinguish when the driver pushes the HDC switch but enable conditions are not met.
- The cluster icon and switch lamp will flash for several seconds then extinguish when HDC disables due to excess speed.
- The cluster icon and switch lamp will flash when HDC deactivates due to overheated brakes. The flashing will stop and HDC will activate again once the brakes have cooled sufficiently.

WARNING!
HDC is only intended to assist the driver in controlling vehicle speed when descending hills. The driver must remain attentive to the driving conditions and is responsible for maintaining a safe vehicle speed.

AUXILIARY DRIVING SYSTEMS

Blind Spot Monitoring (BSM) — If Equipped

The Blind Spot Monitoring (BSM) system uses two radar-based sensors, located inside the taillights, to detect highway licensable vehicles (automobiles, trucks, motorcycles, etc.) that enter the blind spot zones from the rear / front / side of the vehicle.

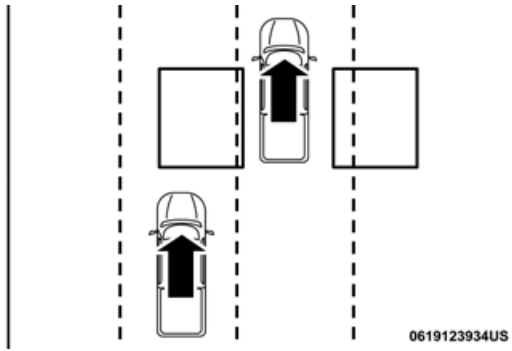

Rear Detection Zones

When the vehicle is started, the BSM warning light will momentarily illuminate in both outside rearview mirrors to let the driver know that the system is operational. The BSM system sensors operate when the vehicle is in any forward gear or REVERSE and enters stand-by mode when the vehicle is in PARK.

The BSM detection zone covers approximately one lane width on both sides of the vehicle 12 ft (3.8 m). The zone length starts at the outside rear view mirror and extends approximately 10 ft (3 m) beyond the rear bumper of the vehicle. The BSM system monitors the detection zones on both sides of the vehicle when the vehicle speed reaches approximately 6 mph (10 km/h) or higher and will alert the driver of vehicles in these areas.

NOTE:

- The BSM system DOES NOT alert the driver about rapidly approaching vehicles that are outside the detection zones.
- The Blind Spot Monitoring (BSM) system may experience drop outs (blinking on and off) of the side mirror Warning Indicator lamps when a motorcycle or any small object remains at the side of the vehicle for extended periods of time (more than a couple of seconds).

The vehicle's taillights, where the radar sensors are located, must remain free of snow, ice, and dirt/road contamination so that the BSM system can function properly. Do not block the taillights with foreign objects (bumper stickers, bicycle racks, etc.).

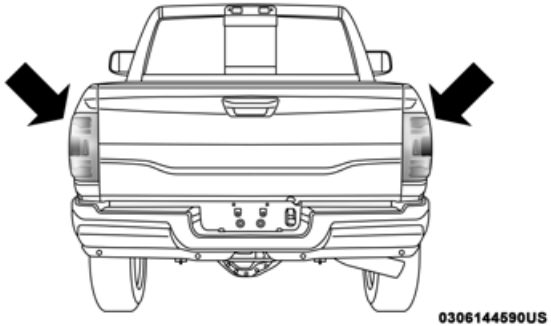

Radar Sensor Locations

If the system detects degraded performance due to contamination or foreign objects, a message will warn you of a blocked sensor and the warning indicators in side view mirrors will be on. The warning indicators will remain illuminated until blockage clearing conditions are met. First

clear the taillights around the sensors of the blockage. After removing the blockage, the following procedure can be used to reset the system:

- Cycle the ignition from ON to OFF and then back ON.

If the blockage message is still present after cycling the ignition and driving in traffic, check again for a blockage.

The BSM system notifies the driver of objects in the detection zones by illuminating the BSM warning light located in the outside mirrors in addition to sounding an audible (chime) alert and reducing the radio volume. Refer to "Modes Of Operation" in this section for further information.

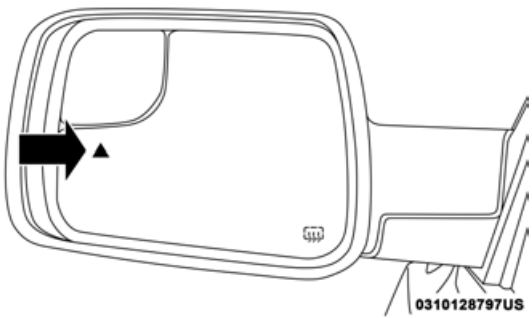

Warning Light Location

The BSM system monitors the detection zone from three different entry points (side, rear, front) while driving to see if an alert is necessary. The BSM system will issue an alert during these types of zone entries.

Entering From The Side

Vehicles that move into your adjacent lanes from either side of the vehicle.

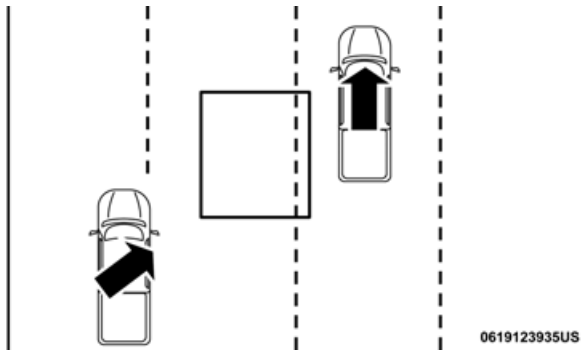

Side Monitoring

Entering From The Rear

Vehicles that come up from behind your vehicle on either side and enter the rear detection zone with a relative speed of less than 30 mph (48 km/h).

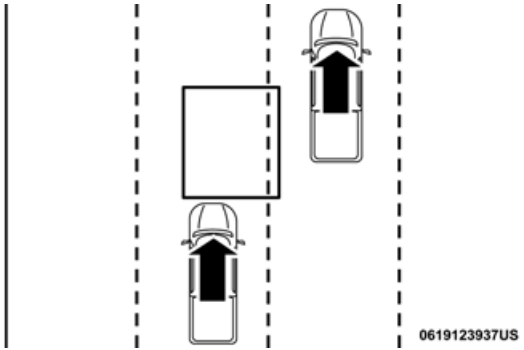

Rear Monitoring

Overtaking Traffic

If you pass another vehicle slowly with a relative speed less than 15 mph (24 km/h) and the vehicle remains in the blind spot for approximately 1.5 seconds, the warning light will be illuminated. If the difference in speed between the two vehicles is greater than 15 mph (24 km/h), the warning light will not illuminate.

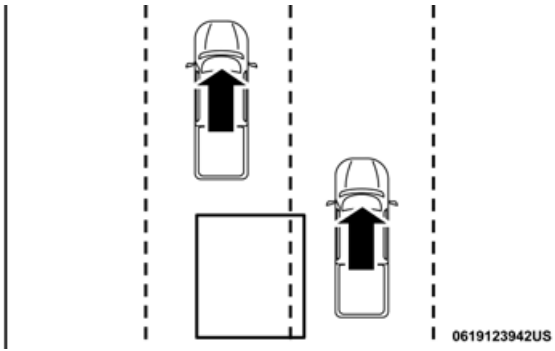

Overtaking/Approaching

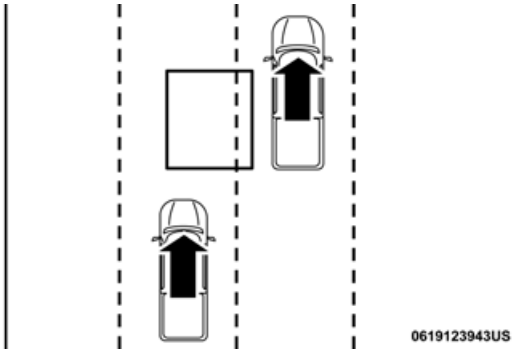

Overtaking/Passing

The BSM system is designed not to issue an alert on stationary objects such as guardrails, posts, walls, foliage, berms, snow banks, car washes etc. However, occasionally the system may alert on such objects. This is normal operation and your vehicle does not require service.

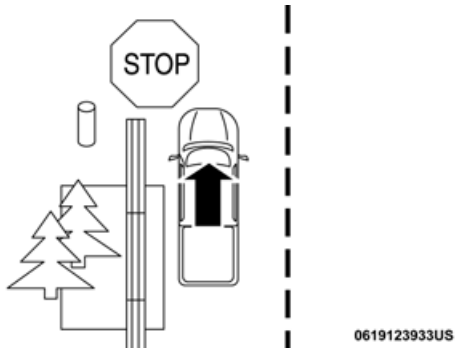

Stationary Objects

The BSM system will not alert you of objects that are traveling in the opposite direction of the vehicle in adjacent lanes.

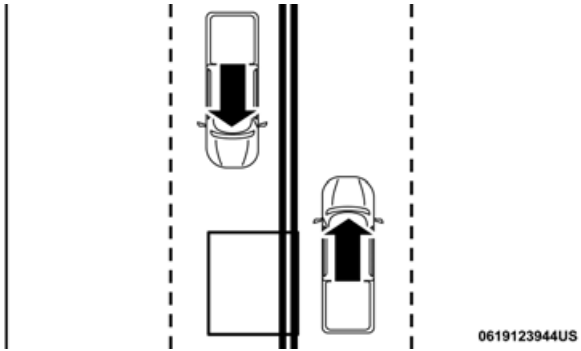

Opposing Traffic

WARNING!
The Blind Spot Monitoring system is only an aid to help detect objects in the blind spot zones. The BSM system is not designed to detect pedestrians, bicyclists, or animals. Even if your vehicle is equipped with the BSM system, always check your vehicle's mirrors, glance over your shoulder, and use your turn signal before changing lanes. Failure to do so can result in serious injury or death.

Rear Cross Path (RCP)

The Rear Cross Path (RCP) feature is intended to aid the driver when backing out of parking spaces where their vision of oncoming vehicles may be blocked. Proceed slowly and cautiously out of the parking space until the rear end of the vehicle is exposed. The RCP system will then have a clear view of the cross traffic and if an oncoming vehicle is detected, alert the driver.

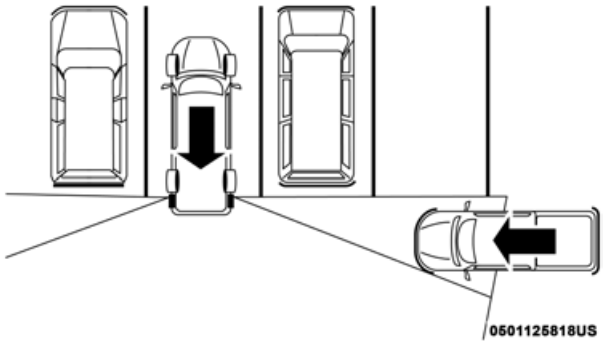

RCP Detection Zones

RCP monitors the rear detection zones on both sides of the vehicle, for objects that are moving toward the side of the vehicle with a minimum speed of approximately 3 mph

(5 km/h), to objects moving a maximum of approximately 20 mph (32 km/h), such as in parking lot situations.

NOTE:
In a parking lot situation, oncoming vehicles can be obscured by vehicles parked on either side. If the sensors are blocked by other structures or vehicles, the system will not be able to alert the driver.

When RCP is on and the vehicle is in REVERSE, the driver is alerted using both the visual and audible alarms, including reducing the radio volume.

WARNING!
Rear Cross Path Detection (RCP) is not a back up aid system. It is intended to be used to help a driver detect an oncoming vehicle in a parking lot situation. Drivers must be careful when backing up, even when using RCP. Always check carefully behind your vehicle, look behind you, and be sure to check for pedestrians, animals, other vehicles, obstructions, and blind spots before backing up. Failure to do so can result in serious injury or death.

Modes Of Operation

Three selectable modes of operation are available in the Uconnect System.

Refer to “Uconnect Settings” in “Multimedia” for further information.

Blind Spot Alert Lights Only

When operating in Blind Spot Alert mode, the BSM system will provide a visual alert in the appropriate side view mirror based on a detected object. However, when the system is operating in Rear Cross Path (RCP) mode, the system will respond with both visual and audible alerts when a detected object is present. Whenever an audible alert is requested, the radio is muted.

Blind Spot Alert Lights/Chime

When operating in Blind Spot Alert Lights/Chime mode, the BSM system will provide a visual alert in the appropriate side view mirror based on a detected object. If the turn signal is then activated, and it corresponds to an alert present on that side of the vehicle, an audible chime will also be sounded. Whenever a turn signal and detected object are

present on the same side at the same time, both the visual and audible alerts will be issued. In addition to the audible alert the radio (if on) will also be muted.

NOTE:
Whenever an audible alert is requested by the BSM system, the radio is also muted.

When the system is in RCP, the system shall respond with both visual and audible alerts when a detected object is present. Whenever an audible alert is requested, the radio is also muted. Turn/hazard signal status is ignored; the RCP state always requests the chime.

Blind Spot Alert Off

When the BSM system is turned off there will be no visual or audible alerts from either the BSM or RCP systems.

NOTE:
The BSM system will store the current operating mode when the vehicle is shut off. Each time the vehicle is started the previously stored mode will be recalled and used.

General Information

The following regulatory statement applies to all Radio Frequency (RF) devices equipped in this vehicle:

This device complies with Part 15 of the FCC Rules and with Industry Canada license-exempt RSS standard(s). Operation is subject to the following two conditions:

1. This device may not cause harmful interference.
2. This device must accept any interference received, including interference that may cause undesired operation.

NOTE:
Changes or modifications not expressly approved by the party responsible for compliance could void the user's authority to operate the equipment.

Forward Collision Warning (FCW) With Mitigation — If Equipped

The Forward Collision Warning (FCW) system provides the driver with audible, visual warnings (within the instrument cluster display), and may apply a haptic warning in the form of a brake jerk, to warn the driver when it detects a potential frontal collision. The warnings are intended to provide the driver with enough time to react, avoid or mitigate the potential collision.

NOTE:
FCW monitors the information from the forward looking sensors as well as Electronic Brake Controller (EBC), to calculate the probability of a forward collision. When the system determines that a forward collision is probable, the driver will be provided with audible and visual warnings as well as a possible haptic warning in the form of a brake jerk.

If the driver does not take action based upon these progressive warnings, then the system will provide a limited level of active braking to help slow the vehicle and mitigate the potential forward collision. If the driver reacts to the warnings by braking and the system determines that the driver intends to avoid the collision by braking but has not applied sufficient brake force, the system will compensate and provide additional brake force as required.

If a FCW with Mitigation event begins at a speed below 32 mph (52 km/h), the system may provide the maximum braking possible to mitigate the potential forward collision. If the Forward Collision Warning with Mitigation event stops the vehicle completely, the system will hold the vehicle at standstill for two seconds and then release the brakes.

FCW Message

When the system determines a collision with the vehicle in front of you is no longer probable, the warning message will be deactivated.

NOTE:

- The minimum speed for FCW activation is 3 mph (5 km/h).
- The FCW alerts may be triggered on objects other than vehicles such as guard rails or sign posts based on the course prediction. This is expected and is a part of normal FCW activation and functionality.
- It is unsafe to test the FCW system. To prevent such misuse of the system, after four Active Braking events within a key cycle, the Active Braking portion of FCW will be deactivated until the next key cycle.
- The FCW system is intended for on-road use only. If the vehicle is taken off-road, the FCW system should be deactivated to prevent unnecessary warnings to the surroundings.
- FCW may not react to irrelevant objects such as overhead objects, ground reflections, objects not in the path of the vehicle, stationary objects that are far away, oncoming traffic, or leading vehicles with the same or higher rate of speed.
- "FCW will be disabled like ACC, with the unavailable screens.

WARNING!

Forward Collision Warning (FCW) is not intended to avoid a collision on its own, nor can FCW detect every type of potential collision. The driver has the responsibility to avoid a collision by controlling the vehicle via braking and steering. Failure to follow this warning could lead to serious injury or death.

Turning FCW On or Off

The FCW button is located in the Uconnect display in the control settings. Refer to "Uconnect Settings" in "Multimedia" in the Owner's Manual for further information.

- To turn the FCW system on, press the forward collision button once to turn the system on.
- To turn the FCW system off, press the forward collision button once to turn the system off.

NOTE:

- When the FCW is "on", this allows the system to warn the driver of a possible collision with the vehicle in front.
- When the FCW is "off" prevents the system from warning the driver of a possible collision with the vehicle in front. If the FCW is set to "off", "FCW OFF" will be displayed in the instrument cluster display.

- When FCW status is set to “Only Warning” prevents the system from providing limited active braking, or additional brake support if the driver is not braking adequately in the event of a potential frontal collision.
- When FCW status is set to “Warning and Braking” this allows the system to warn the driver of a possible collision with the vehicle in front using audible/visual warnings and it applies autonomous braking.
- The system will retain the last setting selected by the driver after ignition shutdown.

FCW Braking Status And Sensitivity

The FCW sensitivity and Active Braking status are programmable through the Uconnect System. Refer to “Uconnect Settings” in “Multimedia” in the Owner's Manual for further information.

- Far
  - When the sensitivity of FCW is set to the “Far” setting and the system status is “Warning and Braking”, this allows the system to warn the driver of a possible more distant collisions with the vehicle in front using audible/visual warnings.
  - More cautious drivers that do not mind frequent warnings may prefer this setting.
- Medium
  - When the sensitivity of FCW is set to the “Medium” setting and the system status is “Warning and Braking”, this allows the system to warn the driver of a possible collision with the vehicle in front using audible/visual warnings.
- Near
  - When the sensitivity of FCW is set to the “Near” setting and the system status is “Warning and Braking”, this allows the system to warn the driver of a possible closer collisions with the vehicle in front using audible/visual warnings.
  - This setting provides less reaction time than the “Far” and “Medium” settings, which allows for a more dynamic driving experience.
  - More dynamic or aggressive drivers that want to avoid frequent warnings may prefer this setting.

FCW Limited Warning

If the instrument cluster displays "ACC/FCW Limited Functionality" or "ACC/FCW Limited Functionality Clean Front Windshield" momentarily, there may be a condition that limits FCW functionality. Although the vehicle is still drivable under normal conditions, the active braking may not be fully available. Once the condition that limited the system performance is no longer present, the system will return to its full performance state. If the problem persists, see an authorized dealer.

Service FCW Warning

If the system turns off, and the instrument cluster displays:

- ACC/FCW Unavailable Service Required
- Cruise/FCW Unavailable Service Required

This indicates there is an internal system fault. Although the vehicle is still drivable under normal conditions, have the system checked by an authorized dealer.

General Information

The following regulatory statement applies to all Radio Frequency (RF) devices equipped in this vehicle:

This device complies with Part 15 of the FCC Rules and with Industry Canada license-exempt RSS standard(s). Operation is subject to the following two conditions:

1. This device may not cause harmful interference.
2. This device must accept any interference received, including interference that may cause undesired operation.

NOTE:
Changes or modifications not expressly approved by the party responsible for compliance could void the user's authority to operate the equipment.

Tire Pressure Monitoring System (TPMS)

The Tire Pressure Monitor System (TPMS) will warn the driver of a low tire pressure based on the vehicle recommended cold placard pressure.

NOTE:
The TPMS Warning Light will illuminate in the instrument cluster and a chime will sound when tire pressure is low in one or more of the four active road tires. In addition, the instrument cluster will display a graphic showing the pressure values of each tire with the low tire pressure values in a different color, or the Uconnect radio will display a TPMS message, when this occurs you must increase the tire pressure to the recommended cold placard pressure in order for the TPMS Warning Light to turn off.

The tire pressure will vary with temperature by about 1 psi (7 kPa) for every 12°F (6.5°C). This means that when the outside temperature decreases, the tire pressure will decrease. Tire pressure should always be set based on cold inflation tire pressure. This is defined as the tire pressure after the vehicle has not been driven for at least three hours, or driven less than 1 mile (1.6 km) after a three hour period. The cold tire inflation pressure must not exceed the maximum inflation pressure molded into the tire sidewall. Refer to “Tires” in “Servicing And Maintenance” for information on how to properly inflate the vehicle’s tires. The tire pressure will also increase as the vehicle is driven - this is normal and there should be no adjustment for this increased pressure.

The TPMS will warn the driver of a low tire pressure if the tire pressure falls below the low-pressure warning limit for any reason, including low temperature effects and natural pressure loss through the tire.

The TPMS will continue to warn the driver of low tire pressure as long as the condition exists, and will not turn off until the tire pressure is at or above the recommended cold placard pressure. Once the low TPMS Warning Light illuminates, you must increase the tire pressure to the recommended cold placard pressure in order for the TPMS Warning Light to turn off. The system will automatically update and the TPMS Warning Light will turn off once the system receives the updated tire pressures. The vehicle may need to be driven for up to 20 minutes above 15 mph (24 km/h) in order for the TPMS to receive this information.

NOTE:
When filling warm tires, the tire pressure may need to be increased up to an additional 4 psi (28 kPa) above the recommended cold placard pressure in order to turn the TPMS Warning Light off.

For example, your vehicle may have a recommended cold (parked for more than three hours) placard pressure of 30 psi (207 kPa). If the ambient temperature is 68°F (20°C) and the measured tire pressure is 27 psi (186 kPa), a temperature drop to 20°F (-7°C) will decrease the tire pressure to approximately 23 psi (158 kPa). This tire pressure is sufficiently low enough to turn on the TPMS Warning Light. Driving the vehicle may cause the tire pressure to rise to approximately 27 psi (186 kPa), but the TPMS Warning Light will still be on. In this situation, the TPMS Warning Light will turn off only after the tires are inflated to the vehicle's recommended cold placard pressure value.

CAUTION!

- **The TPMS has been optimized for the original equipment tires and wheels. TPMS pressures and warning have been established for the tire size equipped on your vehicle. Undesirable system operation or sensor damage may result when using replacement equipment that is not of the same size, type, and/or style. Aftermarket wheels can cause sensor damage.**

(Continued)

CAUTION! *(Continued)*

- **Using aftermarket tire sealants may cause the Tire Pressure Monitoring System (TPMS) sensor to become inoperable. After using an aftermarket tire sealant it is recommended that you take your vehicle to an authorized dealership to have your sensor function checked.**
- **After inspecting or adjusting the tire pressure always reinstall the valve stem cap. This will prevent moisture and dirt from entering the valve stem, which could damage the TPMS sensor.**

NOTE:

- The TPMS is not intended to replace normal tire care and maintenance or to provide warning of a tire failure or condition.
- If your vehicle is not equipped with the Tire Fill Alert feature the TPMS should not be used as a tire pressure gauge while adjusting your tire pressure.
- Driving on a significantly under-inflated tire causes the tire to overheat and can lead to tire failure. Under-inflation also reduces fuel efficiency and tire tread life, and may affect the vehicle's handling and stopping ability.

- The TPMS is not a substitute for proper tire maintenance, and it is the driver's responsibility to maintain correct tire pressure using an accurate tire pressure gauge, even if under-inflation has not reached the level to trigger illumination of the TPMS Warning Light.
- Seasonal temperature changes will affect tire pressure, and the TPMS will monitor the actual tire pressure in the tire.

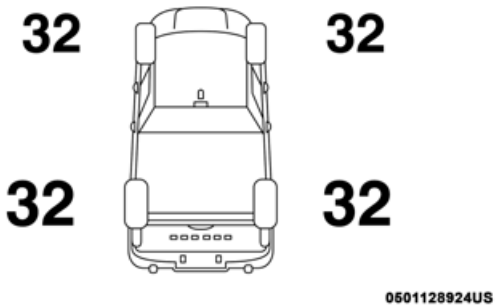

Example: Tire Pressure Monitor Display

The Tire Pressure Monitor System (TPMS) uses wireless technology with wheel rim mounted electronic sensors to monitor tire pressure levels. Sensors, mounted to each wheel as part of the valve stem, transmit tire pressure readings to the receiver module.

NOTE:
It is particularly important for you to check the tire pressure in all of the tires on your vehicle monthly and to maintain the proper pressure.

The TPMS consists of the following components:

- Receiver module
- Four tire pressure monitoring sensors
- Various tire pressure monitoring system messages, which display in the instrument cluster
- Tire Pressure Monitoring System Warning Light

Tire Pressure Monitoring Low Pressure Warnings

The "Tire Pressure Monitoring Telltale Light" will illuminate in the instrument cluster and a chime will sound when tire pressure is low in one or more of the four active road tires. In addition, the instrument cluster will display a graphic showing the pressure values of each tire with the low tire pressure values in a different color. An "Inflate to XX" message will also be displayed.

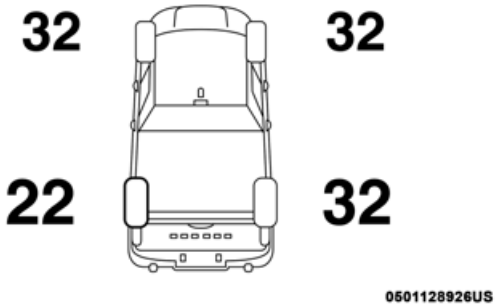

Example: Low Tire Pressure Display

Should this occur, you should stop as soon as possible and inflate the tires with a low pressure condition (those in a different color in the instrument cluster graphic) to the vehicle's recommended cold placard pressure inflation value as shown in the "Inflate to XX" message. Once the system receives the updated tire pressures, the system will automatically update, the graphic display in the instrument cluster will return to it's original color, and the "Tire Pressure Monitoring Telltale Light" will turn off. The vehicle may need to be driven for up to 20 minutes above 15 mph (24 km/h) in order for the TPMS to receive this information.

NOTE:
When filling warm tires, the tire pressure may need to be increased up to an additional 4 psi (28 kPa) above the recommended cold placard pressure in order to turn the Tire Pressure Monitoring Telltale Light off.

Service TPMS Warning

If a system fault is detected, the "Tire Pressure Monitoring Telltale Light" will flash on and off for 75 seconds and then remain on solid. The system fault will also sound a chime. In addition, the instrument cluster will display a "SERVICE TPM SYSTEM" message for a minimum of five seconds and then display dashes (- -) in place of the pressure value to indicate which sensor is not being received.

If the ignition switch is cycled, this sequence will repeat, providing the system fault still exists. If the system fault no longer exists, the "Tire Pressure Monitoring Telltale Light" will no longer flash, and the "SERVICE TPM SYSTEM" message will no longer display, and a pressure value will display in place of the dashes. A system fault can occur due to any of the following:

- Signal interference due to electronic devices or driving next to facilities emitting the same radio frequencies as the TPM sensors.

- Installing aftermarket window tinting that contains materials that may block radio wave signals.
- Accumulation of snow or ice around the wheels or wheel housings.
- Using tire chains on the vehicle.
- Using wheels/tires not equipped with TPM sensors.

A system fault may occur due to an incorrect TPM sensor location condition. When a system fault occurs due to an incorrect TPM sensor location, the “Tire Pressure Monitoring Telltale Light” will flash on and off for 75 seconds and then remain on solid. The system fault will also sound a chime. In addition, the instrument cluster will display a “Tire Pressure Temporarily Unavailable” message in place of the tire pressure display screen. If the ignition switch is cycled, this sequence will repeat, providing the system fault still exists. If the system fault no longer exists, the “Tire Pressure Monitoring Telltale Light” will no longer flash and the tire pressure display screen will be displayed showing the tire pressure values the correct locations.

Vehicles With Non Matching Full Size Spare Or Compact Spare

- The non matching full size spare or compact spare tire does not have a TPM sensor. Therefore, the TPMS will not monitor the pressure in the non matching full size spare or compact spare tire.
- If you install the non matching full size spare or compact spare tire in place of a road tire that has a pressure below the low-pressure warning limit, upon the next ignition switch cycle, the TPM Telltale Light and a “LOW TIRE” message will remain ON and a chime will sound. In addition, the graphic in the instrument cluster will still display a pressure value in a different color and an “Inflate to XX” message.
- After driving the vehicle for up to 20 minutes above 15 mph (24 km/h), the TPM Telltale Light will flash on and off for 75 seconds and then remain on solid. In addition, the instrument cluster will display a "SERVICE TPM SYSTEM" message for a minimum of five seconds and then display dashes (- -) in place of the pressure value.

- For each subsequent ignition switch cycle, a chime will sound, the TPM Telltale Light will flash on and off for 75 seconds and then remain on solid, and the instrument cluster will display a "SERVICE TPM SYSTEM" message for a minimum of five seconds and then display dashes (- -) in place of the pressure value.
- Once you repair or replace the original road tire and reinstall it on the vehicle in place of the non matching full size spare or compact spare, the TPMS will update automatically. In addition, the TPM Telltale Light will turn OFF and the graphic in the instrument cluster will display a new pressure value instead of dashes (- -), as long as no tire pressure is below the low-pressure warning limit in any of the four active road tires. The vehicle may need to be driven for up to 20 minutes above 15 mph (24 km/h) in order for the TPMS to receive this information.

Trailer Tire Pressure Monitoring System (TTPMS)

The Trailer Tire Pressure Monitoring System (TTPMS) is a feature that will display the trailer tire pressure values and warn the driver of a low trailer tire pressure, based on the drivers set target tire pressure value, through the Instrument Cluster (IC).

The TTPMS monitors the pressure of each tire and warns the driver, through the IC, when either a low tire pressure condition or a TPM sensor or system malfunction condition exists. The IC will display the actual tire pressure or dashes for each of the trailer tires in the correct trailer position, based on trailer configuration.

The TTPMS consist of the following components:

- Trailer Receiver Module
- Trailer Interface Module
- Two to twelve tire pressure monitoring sensors depending on trailer configuration

The TTPMS is configured though the trailer settings menu in the Uconnect system by selecting the desired trailer number (up to four trailers can be configured), the number of axles (1 - 3), the number of trailer tires (2, 4, 6, 8, or 12), and the set trailer tire pressure. Refer to “Uconnect Settings” in “Multimedia” for further information.

Tire Pressure Monitoring Low Pressure Warnings

When a tire pressure low in one or more of the active road tires is detected a chime will sound. In addition, the instrument cluster will display a graphic showing the pressure values of each tire with the low tire pressure values in a different color. An “Inflate to XXX” message will also be displayed.

NOTE:
"XXX" = TPM trailer tire target pressure value programmed by the customer

Should this occur, you should stop as soon as possible and inflate the tires with a low pressure condition (those in a different color in the instrument cluster graphic) to the customer programmed target tire pressure value as shown in the “Inflate to XXX” message. Once the system receives the updated tire pressures, the system will automatically update the graphic display in the instrument cluster will return to it’s original color. The vehicle may need to be driven for up to 10 minutes above 15 mph (24 km/h) in order for the TTPMS to receive the updated information.

Service TTPMS Warning

If a system fault is detected, the system fault will sound a chime and the instrument cluster will display a “Trailer Tire Pressure System Service Required” message for a minimum of five seconds and then display dashes (- -) in place of the pressure value to indicate which sensor is not being received.

Once the system fault is corrected the "Trailer Tire Pressure System Service Required" message will no longer be displayed and the dashes will be replaced by pressure values. The vehicle may need to be driven for up to 10 minutes above 15 mph (24 km/h) in order for the TTPMS to receive the updated information.

Trailer Tire Pressure System Not Configured

A “Trailer Tire Pressure System Not Configured” message will be displayed in the Instrument Cluster when a trailer number is selected that does not have configuration values entered for the (Number of Tires, Number of Axles, SET Target Tire Pressure, trailer TPM sensor ID's).

To correct this condition the (Number of Tires, Number of Axles, and SET Target Tire Pressure) values must be entered in the radio for the trailer number selected. The trailer sensors must also be paired to the trailer. Refer to the “Uconnect Settings” in “Multimedia” for further information.

Trailer Sensors Detected Do Not Match Active Trailer

The "Trailer Sensors Detected Do Not Match Active Trailer" message will be displayed in the Instrument Cluster when the trailer sensors being received by the TTPM module do match the trailer sensors paired to the current trailer number selected. This message will be displayed when the sensors being received completely match the sensors paired to another trailer number configured in the TTPM module.

To correct this condition, the correct trailer number must be selected in the radio. Refer to the "Uconnect Settings" in "Multimedia" for further information.

Tire Fill Alert

This feature notifies the user when the placard tire pressure is attained while inflating or deflating the tire.

The customer may choose to disable or enable the Tire Fill Alert feature through use of the customer settings in the radio.

NOTE:

- Only one tire can be filled at a time when using the Tire Fill Alert system.
- The Tire Fill Alert feature cannot be entered if an existing TPM system fault is set to "active" or if the system is in deactivation mode (if equipped).

The system will be activated when the TPM receiver module detects a change in tire pressure. The ignition must be in the RUN mode, with the transmission in PARK (P).

NOTE:
It is not required to have the engine running to enter Tire Fill Alert mode.

The hazard lamps will come on to confirm the vehicle is in Tire Fill Alert mode.

When Tire Fill Alert Mode is entered, the tire pressure display screen will be displayed in the instrument cluster.

Operation:

- The horn will chirp to let the user know when to stop filling the tire, when it reaches recommended pressure.
- The horn will chirp three times if the tire is over filled and will continue to chirp every five seconds if the user continues to inflate the tire.

- The horn will chirp once again when enough air is let out to reach proper inflation level.
- The horn will also chirp three times if the tire is then under-inflated and will continue to chirp every five seconds if the user continues to deflate the tire.

Selectable Tire Fill Alert (STFA)

The Selectable Tire Fill Alert (STFA) system is an optional feature that is included as part of the normal Tire Fill Alert system. The system is designed to allow the customer to select a pressure to inflate or deflate the vehicle's front and rear axle tires to and to provide feedback to the customer while inflating or deflating the vehicle's tires.

In the Selectable Tire Fill Alert customer settings menu in the radio, the customer will be able to select a pressure setting for both the front and rear axle tire pressures by scrolling through a pressure range from XX to 15 psi in 1 psi increments for each axle setting. XX = the vehicle’s cold placard pressure values for the front and rear axles as shown on the vehicle placard pressure label.

The customer may also store the pressure values chosen for each axle in the radio as a preset pressure. The customer will be allowed to store up to two sets of preset values in the radio for the front and rear axle pressure values.

Once the customer selects the tire pressures for the front and rear axles that they want to inflate or deflate to, they can begin inflating or deflating one tire at a time.

NOTE:
The STFA system will only support inflating or deflating one tire at a time.

The system will be activated when the TPM receiver module detects a change in tire pressure. The ignition must be in the RUN mode, with the transmission in PARK (P).

The hazard lamps will come on to confirm the vehicle is in Tire Fill Alert mode.

When Tire Fill Alert Mode is entered, the tire pressure display screen will be displayed in the instrument cluster.

Operation:

- The horn will chirp once when the selected pressure is reached to let the user know when to stop inflating or deflating the tire.
- The horn will chirp three times if the tire is over inflated or over deflated and will continue to chirp every five seconds if the user continues to inflate or deflate the tire.
- The horn will chirp once again when enough air is added or removed to reach proper selected pressure level.

Tire Pressure Information System (TPIS) 3500 Series Trucks

Your vehicle may be equipped with a Tire Pressure Information System (TPIS).

The Tire Pressure Information System (TPIS) uses wireless technology with wheel rim mounted electronic sensors to transmit tire pressure levels. Sensors mounted to each wheel as part of the valve stem transmit tire pressure readings to the receiver module.

NOTE:
It is particularly important for you to check the tire pressure in all of the tires on your vehicle monthly and to maintain the proper pressure.

The TPIS consists of the following components:

- Receiver module
- Four TPM sensors (Single Rear Wheel (SRW) applications)
- Six TPM sensors (Dual Rear Wheel (DRW) applications)
- Pressure display in the instrument cluster

The TPIS system will display all four (Single Rear Wheel (SRW) applications) or six (Dual Rear Wheel (DRW) applications) tire pressure values in the instrument cluster display.

If a system fault is detected, the instrument cluster will display a "SERVICE TPM SYSTEM" message for a minimum of five seconds and then display dashes (- -) in place of the pressure value to indicate which sensor is not being received.

If the ignition switch is cycled, this sequence will repeat, providing the system fault still exists. If the system fault no longer exists, the "SERVICE TPM SYSTEM" message will no longer be displayed, and a pressure value will display in place of the dashes. A system fault can occur due to any of the following:

- Signal interference due to electronic devices or driving next to facilities emitting the same radio frequencies as the TPM sensors.
- Installing aftermarket window tinting that contains materials that may block radio wave signals.
- Accumulation of snow or ice around the wheels or wheel housings.
- Using tire chains on the vehicle.
- Using wheels/tires not equipped with TPM sensors.

General Information

This device complies with Part 15 of the FCC rules and RSS 210 of Industry Canada. Operation is subject to the following conditions:

1. This device may not cause harmful interference.
2. This device must accept any interference received, including interference that may cause undesired operation.

NOTE:
Changes or modifications not expressly approved by the party responsible for compliance could void the user's authority to operate the equipment.

OCCUPANT RESTRAINT SYSTEMS

Some of the most important safety features in your vehicle are the restraint systems:

Occupant Restraint Systems Features

- Seat Belt Systems
- Supplemental Restraint Systems (SRS) Air Bags
- Child Restraints

Some of the safety features described in this section may be standard equipment on some models, or may be optional equipment on others. If you are not sure, ask an authorized dealer.

Important Safety Precautions

Please pay close attention to the information in this section. It tells you how to use your restraint system properly, to keep you and your passengers as safe as possible.

Here are some simple steps you can take to minimize the risk of harm from a deploying air bag:

1. Children 12 years old and under should always ride buckled up in the rear seat of a vehicle with a rear seat.
2. A child who is not big enough to wear the vehicle seat belt properly (Refer to "Child Restraints" in this section for further information) must be secured in the appropriate child restraint or belt-positioning booster seat in a rear seating position.
3. If a child from 2 to 12 years old (not in a rear-facing child restraint) must ride in the front passenger seat, move the seat as far back as possible and use the proper child restraint (Refer to "Child Restraints" in this section for further information).

4. Never allow children to slide the shoulder belt behind them or under their arm.

5. You should read the instructions provided with your child restraint to make sure that you are using it properly.

6. All occupants should always wear their lap and shoulder belts properly.

7. The driver and front passenger seats should be moved back as far as practical to allow the front air bags room to inflate.

8. Do not lean against the door or window. If your vehicle has side air bags, and deployment occurs, the side air bags will inflate forcefully into the space between occupants and the door and occupants could be injured.

9. If the air bag system in this vehicle needs to be modified to accommodate a disabled person, refer to the "Customer Assistance" section for customer service contact information.

WARNING!

- **Never place a rear-facing child restraint in front of an air bag. A deploying passenger front air bag can cause death or serious injury to a child 12 years or younger, including a child in a rear-facing child restraint.**
- **Never install a rear-facing child restraint in the front seat of a vehicle. Only use a rear-facing child restraint in the rear seat. If the vehicle does not have a rear seat, do not transport a rear-facing child restraint in that vehicle.**

Seat Belt Systems

Buckle up even though you are an excellent driver, even on short trips. Someone on the road may be a poor driver and could cause a collision that includes you. This can happen far away from home or on your own street.

Research has shown that seat belts save lives, and they can reduce the seriousness of injuries in a collision. Some of the worst injuries happen when people are thrown from the vehicle. Seat belts reduce the possibility of ejection and the risk of injury caused by striking the inside of the vehicle. Everyone in a motor vehicle should be belted at all times.

Enhanced Seat Belt Use Reminder System (BeltAlert)

Driver And Passenger BeltAlert — If Equipped

BeltAlert is a feature intended to remind the driver and outboard front seat passenger (if equipped with outboard front passenger seat BeltAlert) to buckle their seat belts. The Belt Alert feature is active whenever the ignition switch is in the START or ON/RUN position.

Initial Indication

If the driver is unbuckled when the ignition switch is first in the START or ON/RUN position, a chime will signal for a few seconds. If the driver or outboard front seat passenger (if equipped with outboard front passenger seat BeltAlert) is unbuckled when the ignition switch is first in the START or ON/RUN position the Seat Belt Reminder Light will turn on and remain on until both outboard front seat belts are buckled. The outboard front passenger seat BeltAlert is not active when an outboard front passenger seat is unoccupied.

BeltAlert Warning Sequence

The BeltAlert warning sequence is activated when the vehicle is moving above a specified vehicle speed range and the driver or outboard front seat passenger is unbuckled (if equipped with outboard front passenger seat BeltAlert) (the outboard front passenger seat BeltAlert is not active when the outboard front passenger seat is unoccupied). The BeltAlert warning sequence starts by blinking the Seat Belt Reminder Light and sounding an intermittent chime. Once the BeltAlert warning sequence has completed, the Seat Belt Reminder Light will remain on until the seat belts are buckled. The BeltAlert warning sequence may repeat based on vehicle speed until the driver and occupied outboard front seat passenger seat belts are buckled. The driver should instruct all occupants to buckle their seat belts.

Change Of Status

If the driver or outboard front seat passenger (if equipped with outboard front passenger seat BeltAlert) unbuckles their seat belt while the vehicle is traveling, the BeltAlert warning sequence will begin until the seat belts are buckled again.

The outboard front passenger seat BeltAlert is not active when the outboard front passenger seat is unoccupied. BeltAlert may be triggered when an animal or other items are placed on the outboard front passenger seat or when the seat is folded flat (if equipped). It is recommended that pets be restrained in the rear seat (if equipped) in pet harnesses or pet carriers that are secured by seat belts, and cargo is properly stowed.

BeltAlert can be activated or deactivated by an authorized dealer. FCA US LLC does not recommend deactivating BeltAlert.

NOTE:
If BeltAlert has been deactivated and the driver or outboard front seat passenger (if equipped with outboard front passenger seat BeltAlert) is unbuckled the Seat Belt Reminder Light will turn on and remain on until the driver and outboard front seat passenger seat belts are buckled.

Lap/Shoulder Belts

All seating positions except the Mega Cab and Crew Cab front center seating position have combination lap/shoulder belts.

The seat belt webbing retractor will lock only during very sudden stops or collisions. This feature allows the shoulder part of the seat belt to move freely with you under normal conditions. However, in a collision the seat belt will lock and reduce your risk of striking the inside of the vehicle or being thrown out of the vehicle.

WARNING!

- **Relying on the air bags alone could lead to more severe injuries in a collision. The air bags work with your seat belt to restrain you properly. In some collisions, the air bags won't deploy at all. Always wear your seat belt even though you have air bags.**
- **In a collision, you and your passengers can suffer much greater injuries if you are not properly buckled up. You can strike the interior of your vehicle or other passengers, or you can be thrown out of the vehicle. Always be sure you and others in your vehicle are buckled up properly.**

(Continued)

WARNING! *(Continued)*

- **It is dangerous to ride in a cargo area, inside or outside of a vehicle. In a collision, people riding in these areas are more likely to be seriously injured or killed.**
- **Do not allow people to ride in any area of your vehicle that is not equipped with seats and seat belts.**
- **Be sure everyone in your vehicle is in a seat and using a seat belt properly. Occupants, including the driver, should always wear their seat belts whether or not an air bag is also provided at their seating position to minimize the risk of severe injury or death in the event of a crash.**
- **Wearing your seat belt incorrectly could make your injuries in a collision much worse. You might suffer internal injuries, or you could even slide out of the seat belt. Follow these instructions to wear your seat belt safely and to keep your passengers safe, too.**
- **Two people should never be belted into a single seat belt. People belted together can crash into one another in a collision, hurting one another badly. Never use a lap/shoulder belt or a lap belt for more than one person, no matter what their size.**

WARNING!

- **A lap belt worn too high can increase the risk of injury in a collision. The seat belt forces won't be at the strong hip and pelvic bones, but across your abdomen. Always wear the lap part of your seat belt as low as possible and keep it snug.**
- **A twisted seat belt may not protect you properly. In a collision, it could even cut into you. Be sure the seat belt is flat against your body, without twists. If you can't straighten a seat belt in your vehicle, take it to an authorized dealer immediately and have it fixed.**
- **A seat belt that is buckled into the wrong buckle will not protect you properly. The lap portion could ride too high on your body, possibly causing internal injuries. Always buckle your seat belt into the buckle nearest you.**
- **A seat belt that is too loose will not protect you properly. In a sudden stop, you could move too far forward, increasing the possibility of injury. Wear your seat belt snugly.**

(Continued)

WARNING! *(Continued)*

- **A seat belt that is worn under your arm is dangerous. Your body could strike the inside surfaces of the vehicle in a collision, increasing head and neck injury. A seat belt worn under the arm can cause internal injuries. Ribs aren't as strong as shoulder bones. Wear the seat belt over your shoulder so that your strongest bones will take the force in a collision.**
- **A shoulder belt placed behind you will not protect you from injury during a collision. You are more likely to hit your head in a collision if you do not wear your shoulder belt. The lap and shoulder belt are meant to be used together.**
- **A frayed or torn seat belt could rip apart in a collision and leave you with no protection. Inspect the seat belt system periodically, checking for cuts, frays, or loose parts. Damaged parts must be replaced immediately. Do not disassemble or modify the seat belt system. Seat belt assemblies must be replaced after a collision.**

Lap/Shoulder Belt Operating Instructions

1. Enter the vehicle and close the door. Sit back and adjust the seat.
2. The seat belt latch plate is above the back of the front seat, and next to your arm in the rear seat (for vehicles equipped with a rear seat). Grasp the latch plate and pull out the seat belt. Slide the latch plate up the webbing as far as necessary to allow the seat belt to go around your lap.

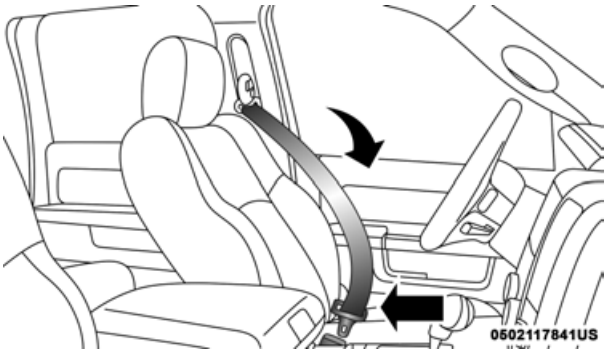

Pulling Out The Latch Plate

3. When the seat belt is long enough to fit, insert the latch plate into the buckle until you hear a “click.”

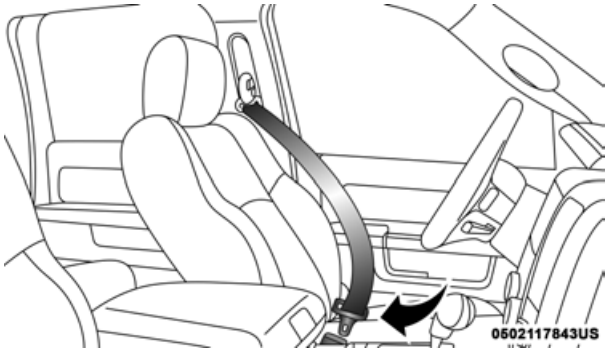

Inserting Latch Plate Into Buckle

4. Position the lap belt so that it is snug and lies low across your hips, below your abdomen. To remove slack in the lap belt portion, pull up on the shoulder belt. To loosen the lap belt if it is too tight, tilt the latch plate and pull on the lap belt. A snug seat belt reduces the risk of sliding under the seat belt in a collision.

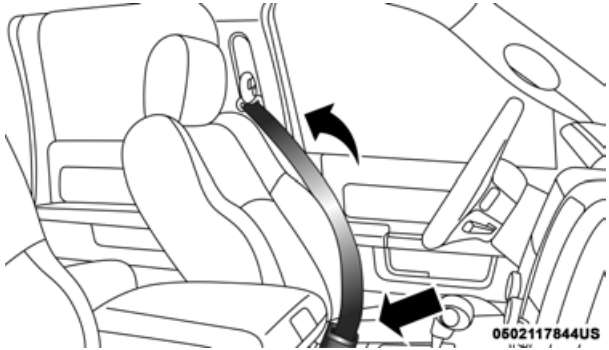

Positioning The Lap Belt

5. Position the shoulder belt across the shoulder and chest with minimal, if any slack so that it is comfortable and not resting on your neck. The retractor will withdraw any slack in the shoulder belt.

6. To release the seat belt, push the red button on the buckle. The seat belt will automatically retract to its stowed position. If necessary, slide the latch plate down the webbing to allow the seat belt to retract fully.

Lap/Shoulder Belt Untwisting Procedure

Use the following procedure to untwist a twisted lap/shoulder belt.

1. Position the latch plate as close as possible to the anchor point.
2. At about 6 to 12 inches (15 to 30 cm) above the latch plate, grasp and twist the seat belt webbing 180 degrees to create a fold that begins immediately above the latch plate.
3. Slide the latch plate upward over the folded webbing. The folded webbing must enter the slot at the top of the latch plate.
4. Continue to slide the latch plate up until it clears the folded webbing and the seat belt is no longer twisted.

Adjustable Upper Shoulder Belt Anchorage

In the driver and outboard front passenger seats, the top of the shoulder belt can be adjusted upward or downward to position the seat belt away from your neck. Push or squeeze the anchorage button to release the anchorage, and move it up or down to the position that serves you best.

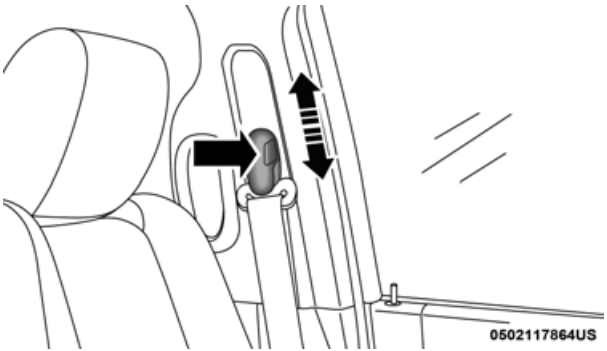

Adjustable Anchorage

As a guide, if you are shorter than average, you will prefer the shoulder belt anchorage in a lower position, and if you are taller than average, you will prefer the shoulder belt anchorage in a higher position. After you release the anchorage button, try to move it up or down to make sure that it is locked in position.

NOTE:
The adjustable upper shoulder belt anchorage is equipped with an Easy Up feature. This feature allows the shoulder belt anchorage to be adjusted in the upward position without pushing or squeezing the release button. To verify the shoulder belt anchorage is latched, pull downward on the shoulder belt anchorage until it is locked into position.

WARNING!
• **Wearing your seat belt incorrectly could make your injuries in a collision much worse. You might suffer internal injuries, or you could even slide out of the seat belt. Follow these instructions to wear your seat belt safely and to keep your passengers safe, too.** • **Position the shoulder belt across the shoulder and chest with minimal, if any slack so that it is comfortable and not resting on your neck. The retractor will withdraw any slack in the shoulder belt.** • **Misadjustment of the seat belt could reduce the effectiveness of the safety belt in a crash.** • **Always make all seat belt height adjustments when the vehicle is stationary.**

First Row Center Seat Belt Operating Instructions (Regular Cab Only)

The first row center seat belt (Regular Cab only) features a seat belt with a mini-latch plate and buckle, which allows the seat belt to detach from the lower anchor when the seat is folded. The latch plate and regular latch plate can then be stored out of the way in the seat for added convenience to open up utilization of the storage areas behind the front seats when the seat is not occupied.

1. Remove the mini-latch plate and regular latch plate from its stowed position on the seat.

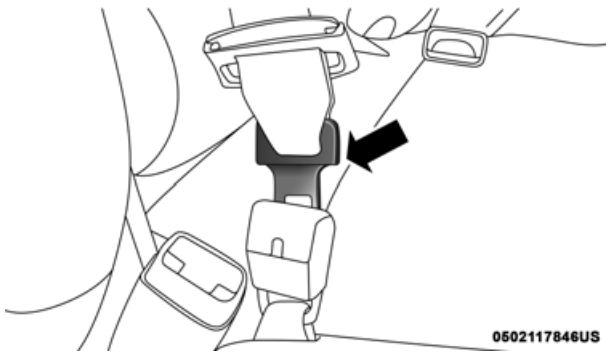

Connect Mini-Latch To Mini-Buckle

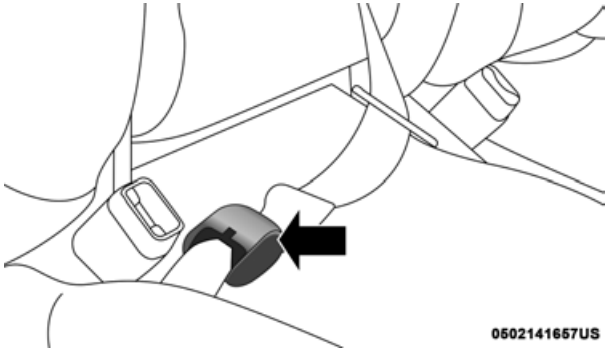

Mini-Latch And Mini-Buckle Connected

2. Grasp the mini-latch plate and pull the seat belt over the seat.
3. Route the shoulder belt to the inside of the right head restraint.
4. When the seat belt is long enough to fit, insert the mini-latch plate into the mini-buckle until you hear a "click."
5. Sit back in seat. Slide the regular latch plate up the webbing as far as necessary to allow the seat belt to go around your lap.
6. When the seat belt is long enough to fit, insert the latch plate into the buckle until you hear a "click."
7. Position the lap belt so that it is snug and lies low across your hips, below your abdomen. To remove slack in the lap belt portion, pull up on the shoulder belt. To loosen the lap belt if it is too tight, pull on the lap belt. A snug seat belt reduces the risk of sliding under the seat belt in a collision.
8. Position the shoulder belt on your chest so that it is comfortable and not resting on your neck. The retractor will withdraw any slack in the seat belt.
9. To release the seat belt, push the red button on the buckle.

10. To disengage the mini-latch plate from the mini-buckle for storage, insert the regular latch plate into the center red slot on the mini-buckle. The seat belt will automatically retract to its stowed position. If necessary, slide the latch plate down the webbing to allow the seat belt to retract fully. Insert the mini-latch plate and regular latch plate into its stowed position.

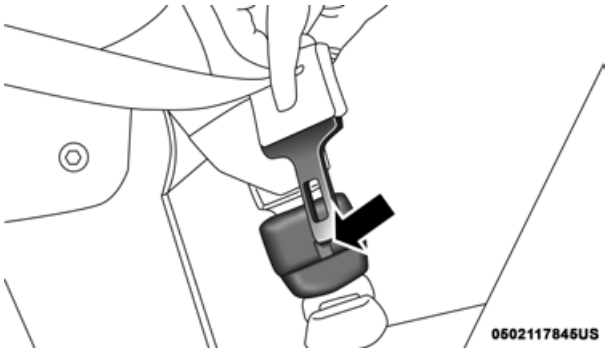

Detaching Mini-Buckle With Seat Belt Tongue

WARNING!

- **If the mini-latch plate and mini-buckle are not properly connected when the seat belt is used by an occupant, the seat belt will not be able to provide proper restraint and will increase the risk of injury in a collision.**
- **When reattaching the mini-latch plate and mini-buckle, ensure the seat belt webbing is not twisted. If the webbing is twisted, follow the preceding procedure to detach the mini-latch plate and mini-buckle, untwist the webbing, and reattach the mini-latch plate and mini-buckle.**

First Row Center Lap Belt Operating Instructions — If Equipped

The center seating position for the Mega Cab and Crew Cab front seat has a lap belt only. To buckle the lap belt, slide the latch plate into the buckle until you hear a "click." To lengthen the lap belt, tilt the latch plate and pull.

To remove slack, pull the loose end of the webbing. Wear the lap belt snug against the hips. Sit back and upright in the seat, then adjust the seat belt as tightly as is comfortable.

Seat Belt Extender

If a seat belt is not long enough to fit properly, even when the webbing is fully extended and the adjustable upper shoulder belt anchorage (if equipped) is in its lowest position, an authorized dealer can provide you with a Seat Belt Extender. The Seat Belt Extender should be used only if the existing seat belt is not long enough. When the Seat Belt Extender is not required for a different occupant, it must be removed.

WARNING!

- **ONLY use a Seat Belt Extender if it is physically required in order to properly fit the original seat belt system. DO NOT USE the Seat Belt Extender if, when worn, the distance between the front edge of the Seat Belt Extender buckle and the center of the occupant's body is LESS than 6 inches.**
- **Using a Seat Belt Extender when not needed can increase the risk of serious injury or death in a collision. Only use the Seat Belt Extender when the lap belt is not long enough and only use in the recommended seating positions. Remove and store the Seat Belt Extender when not needed.**

Seat Belts And Pregnant Women

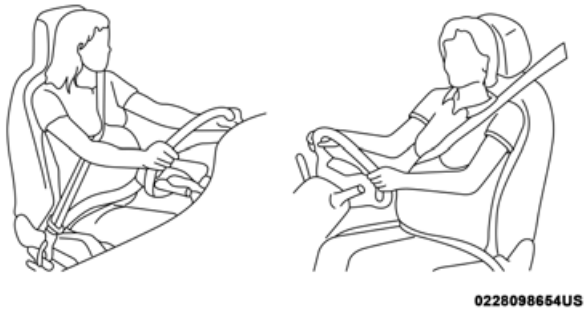

Pregnant Women And Seat Belts

Seat belts must be worn by all occupants including pregnant women: the risk of injury in the event of an accident is reduced for the mother and the unborn child if they are wearing a seat belt.

Position the lap belt snug and low below the abdomen and across the strong bones of the hips. Place the shoulder belt across the chest and away from the neck. Never place the shoulder belt behind the back or under the arm.

Seat Belt Pretensioner

The front outboard seat belt system is equipped with pretensioning devices that are designed to remove slack from the seat belt in the event of a collision. These devices may improve the performance of the seat belt by removing slack from the seat belt early in a collision. Pretensioners work for all size occupants, including those in child restraints.

NOTE:
These devices are not a substitute for proper seat belt placement by the occupant. The seat belt still must be worn snugly and positioned properly.

The pretensioners are triggered by the Occupant Restraint Controller (ORC). Like the air bags, the pretensioners are single use items. A deployed pretensioner or a deployed air bag must be replaced immediately.

Energy Management Feature

The front outboard seat belt system is equipped with an Energy Management feature that may help further reduce the risk of injury in the event of a collision. The seat belt system has a retractor assembly that is designed to release webbing in a controlled manner.

Switchable Automatic Locking Retractors (ALR) — If Equipped

The seat belts in the passenger seating positions may be equipped with a Switchable Automatic Locking Retractor (ALR) which is used to secure a child restraint system. For additional information, refer to “Installing Child Restraints Using The Vehicle Seat Belt” under the “Child Restraints” section of this manual. The figure below illustrates the locking feature for each seating position.

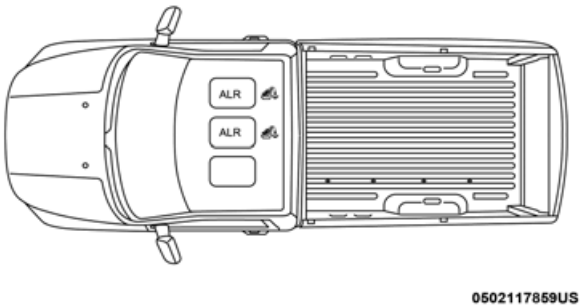

Regular Cab Automatic Locking Retractor (ALR) Locations
ALR = Switchable Automatic Locking Retractor

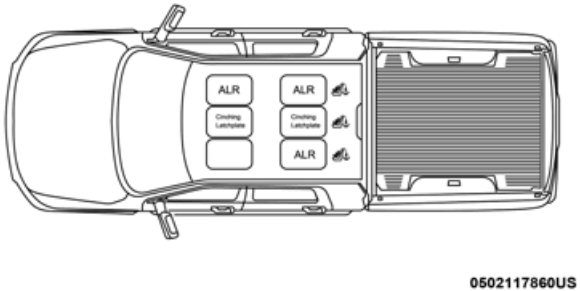

Mega Cab/Crew Cab Automatic Locking Retractor (ALR) Locations
ALR = Switchable Automatic Locking Retractor

If the passenger seating position is equipped with an ALR and is being used for normal usage, only pull the seat belt webbing out far enough to comfortably wrap around the occupant’s mid-section so as to not activate the ALR. If the ALR is activated, you will hear a clicking sound as the seat belt retracts. Allow the webbing to retract completely in this case and then carefully pull out only the amount of webbing necessary to comfortably wrap around the occupant’s mid-section. Slide the latch plate into the buckle until you hear a "click."

In Automatic Locking Mode, the shoulder belt is automatically pre-locked. The seat belt will still retract to remove any slack in the shoulder belt. Use the Automatic Locking Mode anytime a child restraint is installed in a seating position that has a seat belt with this feature. Children 12 years old and under should always be properly restrained in the rear seat of a vehicle with a rear seat.

WARNING!

- **Never place a rear-facing child restraint in front of an air bag. A deploying passenger front air bag can cause death or serious injury to a child 12 years or younger, including a child in a rear-facing child restraint.**
- **Never install a rear-facing child restraint in the front seat of a vehicle. Only use a rear-facing child restraint in the rear seat. If the vehicle does not have a rear seat, do not transport a rear-facing child restraint in that vehicle.**

How To Engage The Automatic Locking Mode

1. Buckle the combination lap and shoulder belt.
2. Grasp the shoulder portion and pull downward until the entire seat belt is extracted.
3. Allow the seat belt to retract. As the seat belt retracts, you will hear a clicking sound. This indicates the seat belt is now in the Automatic Locking Mode.

How To Disengage The Automatic Locking Mode

Unbuckle the combination lap/shoulder belt and allow it to retract completely to disengage the Automatic Locking Mode and activate the vehicle sensitive (emergency) locking mode.

WARNING!

- **The seat belt assembly must be replaced if the switchable Automatic Locking Retractor (ALR) feature or any other seat belt function is not working properly when checked according to the procedures in the Service Manual.**
- **Failure to replace the seat belt assembly could increase the risk of injury in collisions.**
- **Do not use the Automatic Locking Mode to restrain occupants who are wearing the seat belt or children who are using booster seats. The locked mode is only used to install rear-facing or forward-facing child restraints that have a harness for restraining the child.**

Supplemental Restraint Systems (SRS)

Some of the safety features described in this section may be standard equipment on some models, or may be optional equipment on others. If you are not sure, ask an authorized dealer.

The air bag system must be ready to protect you in a collision. The Occupant Restraint Controller (ORC) monitors the internal circuits and interconnecting wiring associated with the electrical Air Bag System Components. Your vehicle may be equipped with the following Air Bag System Components:

Air Bag System Components

- Occupant Restraint Controller (ORC)
- Air Bag Warning Light
- Steering Wheel and Column
- Instrument Panel
- Knee Impact Bolsters
- Driver and Front Passenger Air Bags
- Seat Belt Buckle Switch
- Supplemental Side Air Bags
- Front and Side Impact Sensors — If Equipped
- Seat Belt Pretensioners
- Seat Track Position Sensors

Air Bag Warning Light

The ORC monitors the readiness of the electronic parts of the air bag system whenever the ignition switch is in the START or ON/RUN position. If the ignition switch is in the OFF position or in the ACC position, the air bag system is not on and the air bags will not inflate.

The ORC contains a backup power supply system that may deploy the air bag system even if the battery loses power or it becomes disconnected prior to deployment.

The ORC turns on the Air Bag Warning Light in the instrument panel for approximately four to eight seconds for a self-check when the ignition switch is first in the ON/RUN position. After the self-check, the Air Bag Warning Light will turn off. If the ORC detects a malfunction in any part of the system, it turns on the Air Bag Warning Light, either momentarily or continuously. A single chime will sound to alert you if the light comes on again after initial startup.

The ORC also includes diagnostics that will illuminate the instrument panel Air Bag Warning Light if a malfunction is detected that could affect the air bag system. The diagnostics also record the nature of the malfunction. While the air bag system is designed to be maintenance free, if any of the following occurs, have an authorized dealer service the air bag system immediately.

- The Air Bag Warning Light does not come on during the four to eight seconds when the ignition switch is first in the ON/RUN position.
- The Air Bag Warning Light remains on after the four to eight-second interval.
- The Air Bag Warning Light comes on intermittently or remains on while driving.

NOTE:
If the speedometer, tachometer, or any engine related gauges are not working, the Occupant Restraint Controller (ORC) may also be disabled. In this condition the air bags may not be ready to inflate for your protection. Have an authorized dealer service the air bag system immediately.

WARNING!
Ignoring the Air Bag Warning Light in your instrument panel could mean you won't have the air bag system to protect you in a collision. If the light does not come on as a bulb check when the ignition is first turned on, stays on after you start the vehicle, or if it comes on as you drive, have an authorized dealer service the air bag system immediately.

Front Air Bags

This vehicle has front air bags and lap/shoulder belts for both the driver and front passenger. The front air bags are a supplement to the seat belt restraint systems. The driver front air bag is mounted in the center of the steering wheel. The passenger front air bag is mounted in the instrument panel, above the glove compartment. The words "SRS AIRBAG" or "AIRBAG" are embossed on the air bag covers.

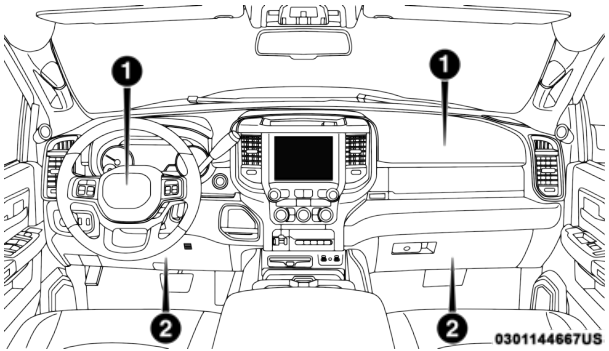

Front Air Bag/Knee Bolster Locations

1 — Driver And Passenger Front Air Bags
2 — Driver And Passenger Knee Impact Bolsters

WARNING!

- **Being too close to the steering wheel or instrument panel during front air bag deployment could cause serious injury, including death. Air bags need room to inflate. Sit back, comfortably extending your arms to reach the steering wheel or instrument panel.**
- **Never place a rear-facing child restraint in front of an air bag. A deploying passenger front air bag can cause death or serious injury to a child 12 years or younger, including a child in a rear-facing child restraint.**
- **Never install a rear-facing child restraint in the front seat of a vehicle. Only use a rear-facing child restraint in the rear seat. If the vehicle does not have a rear seat, do not transport a rear-facing child restraint in that vehicle.**

Driver And Passenger Front Air Bag Features

2500 Series Truck

The Advanced Front Air Bag system has multistage driver and front passenger air bags. This system provides output appropriate to the severity and type of collision as determined by the Occupant Restraint Controller (ORC), which may receive information from the front impact sensors (if equipped) or other system components.

The first stage inflator is triggered immediately during an impact that requires air bag deployment. A low energy output is used in less severe collisions. A higher energy output is used for more severe collisions.

This vehicle may be equipped with a driver and/or front passenger seat belt buckle switch that detects whether the driver or front passenger seat belt is buckled. The seat belt buckle switch may adjust the inflation rate of the Advanced Front Air Bags.

This vehicle may be equipped with driver and/or front passenger seat track position sensors that may adjust the inflation rate of the Advanced Front Air Bags based upon seat position.

3500 Series Truck

The Advanced Front Air Bag system has multistage driver and front passenger air bags. This system provides output appropriate to the severity and type of collision as determined by the Occupant Restraint Controller (ORC), which may receive information from the front impact sensors (if equipped) or other system components.

The first stage inflator is triggered immediately during an impact that requires air bag deployment. A low energy output is used in less severe collisions. A higher energy output is used for more severe collisions.

This vehicle may be equipped with a driver and/or front passenger seat belt buckle switch that detects whether the driver or front passenger seat belt is buckled. The seat belt buckle switch may adjust the inflation rate of the Advanced Front Air Bags.

WARNING!

- **No objects should be placed over or near the air bag on the instrument panel or steering wheel because any such objects could cause harm if the vehicle is in a collision severe enough to cause the air bag to inflate.**
- **Do not put anything on or around the air bag covers or attempt to open them manually. You may damage the air bags and you could be injured because the air bags may no longer be functional. The protective covers for the air bag cushions are designed to open only when the air bags are inflating.**
- **Relying on the air bags alone could lead to more severe injuries in a collision. The air bags work with your seat belt to restrain you properly. In some collisions, air bags won't deploy at all. Always wear your seat belts even though you have air bags.**

Front Air Bag Operation

Front Air Bags are designed to provide additional protection by supplementing the seat belts. Front air bags are not expected to reduce the risk of injury in rear, side, or rollover collisions. The front air bags will not deploy in all frontal collisions, including some that may produce substantial vehicle damage — for example, some pole collisions, truck underrides, and angle offset collisions.

On the other hand, depending on the type and location of impact, front air bags may deploy in crashes with little vehicle front-end damage but that produce a severe initial deceleration.

Because air bag sensors measure vehicle deceleration over time, vehicle speed and damage by themselves are not good indicators of whether or not an air bag should have deployed.

Seat belts are necessary for your protection in all collisions, and also are needed to help keep you in position, away from an inflating air bag.

When the ORC detects a collision requiring the front air bags, it signals the inflator units. A large quantity of non-toxic gas is generated to inflate the front air bags.

The steering wheel hub trim cover and the upper passenger side of the instrument panel separate and fold out of the way as the air bags inflate to their full size. The front air bags fully inflate in less time than it takes to blink your eyes. The front air bags then quickly deflate while helping to restrain the driver and front passenger.

Knee Impact Bolsters

The Knee Impact Bolsters help protect the knees of the driver and front passenger, and position the front occupants for improved interaction with the front air bags.

WARNING!
• **Do not drill, cut, or tamper with the knee impact bolsters in any way.** • **Do not mount any accessories to the knee impact bolsters such as alarm lights, stereos, citizen band radios, etc.**

Supplemental Side Air Bags

Supplemental Seat-Mounted Side Air Bags (SABs)

This vehicle is equipped with Supplemental Seat-Mounted Side Air Bags (SABs).

Supplemental Seat-Mounted Side Air Bags (SABs) are located in the outboard side of the front seats. The SABs are marked with “SRS AIRBAG” or “AIRBAG” on a label or on the seat trim on the outboard side of the seats.

The SABs may help to reduce the risk of occupant injury during certain side impacts, in addition to the injury reduction potential provided by the seat belts and body structure.

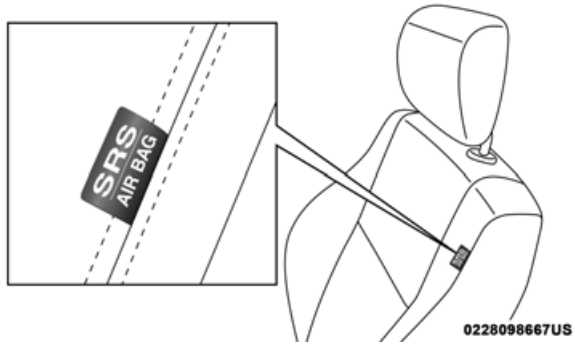

Supplemental Seat-Mounted Side Air Bag Label

When the SAB deploys, it opens the seam on the outboard side of the seatback’s trim cover. The inflating SAB deploys through the seat seam into the space between the occupant and the door. The SAB moves at a very high speed and with such a high force that it could injure occupants if they are not seated properly, or if items are positioned in the area where the SAB inflates. Children are at an even greater risk of injury from a deploying air bag.

WARNING!
Do not use accessory seat covers or place objects between you and the Side Air Bags; the performance could be adversely affected and/or objects could be pushed into you, causing serious injury.

Supplemental Side Air Bag Inflatable Curtains (SABICs)

This vehicle is equipped with Supplemental Side Air Bag Inflatable Curtains (SABICs).

Supplemental Side Air Bag Inflatable Curtains (SABICs) are located above the side windows. The trim covering the SABICs is labeled “SRS AIRBAG” or “AIRBAG.”

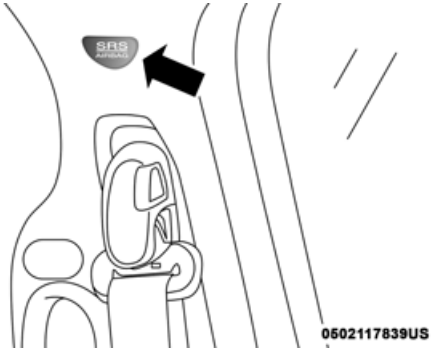

Supplemental Side Air Bag Inflatable Curtain (SABIC) Label Location

SABICs may help reduce the risk of head and other injuries to front and rear seat outboard occupants in certain side impacts, in addition to the injury reduction potential provided by the seat belts and body structure.

The SABIC deploys downward, covering the side windows. An inflating SABIC pushes the outside edge of the headliner out of the way and covers the window. The SABICs inflate with enough force to injure occupants if they are not belted and seated properly, or if items are positioned in the area where the SABICs inflate. Children are at an even greater risk of injury from a deploying air bag.

The SABICs may help reduce the risk of partial or complete ejection of vehicle occupants through side windows in certain side impact events.

WARNING!

- **Do not mount equipment, or stack luggage or other cargo up high enough to block the deployment of the SABICs. The trim covering above the side windows where the SABIC and its deployment path are located should remain free from any obstructions.**
- **In order for the SABICs to work as intended, do not install any accessory items in your vehicle which could alter the roof. Do not add an aftermarket sunroof to your vehicle. Do not add roof racks that require permanent attachments (bolts or screws) for installation on the vehicle roof. Do not drill into the roof of the vehicle for any reason.**

Side Impacts

The Side Air Bags are designed to activate in certain side impacts. The Occupant Restraint Controller (ORC) determines whether the deployment of the Side Air Bags in a particular impact event is appropriate, based on the severity and type of collision. The side impact sensors aid the ORC in determining the appropriate response to impact events. The system is calibrated to deploy the Side Air Bags on the impact side of the vehicle during impacts that require Side Air Bag occupant protection. In side impacts, the Side Air Bags deploy independently; a left side impact deploys the left Side Air Bags only and a right-side impact deploys the right Side Air Bags only. Vehicle damage by itself is not a good indicator of whether or not Side Air Bags should have deployed.

The Side Air Bags will not deploy in all side collisions, including some collisions at certain angles, or some side collisions that do not impact the area of the passenger compartment. The Side Air Bags may deploy during angled or offset frontal collisions where the front air bags deploy.

Side Air Bags are a supplement to the seat belt restraint system. Side Air Bags deploy in less time than it takes to blink your eyes.

WARNING!

- **Occupants, including children, who are up against or very close to Side Air Bags can be seriously injured or killed. Occupants, including children, should never lean on or sleep against the door, side windows, or area where the side air bags inflate, even if they are in an infant or child restraint.**

(Continued)

WARNING! *(Continued)*

- **Seat belts (and child restraints where appropriate) are necessary for your protection in all collisions. They also help keep you in position, away from an inflating Side Air Bag. To get the best protection from the Side Air Bags, occupants must wear their seat belts properly and sit upright with their backs against the seats. Children must be properly restrained in a child restraint or booster seat that is appropriate for the size of the child.**

WARNING!

- **Side Air Bags need room to inflate. Do not lean against the door or window. Sit upright in the center of the seat.**
- **Being too close to the Side Air Bags during deployment could cause you to be severely injured or killed.**
- **Relying on the Side Air Bags alone could lead to more severe injuries in a collision. The Side Air Bags work with your seat belt to restrain you properly. In some collisions, Side Air Bags won't deploy at all. Always wear your seat belt even though you have Side Air Bags.**

NOTE:
Air bag covers may not be obvious in the interior trim, but they will open during air bag deployment.

Rollover Events

Side Air Bags are designed to activate in certain rollover events. The Occupant Restraint Controller (ORC) determines whether the deployment of the Side Air Bags in a particular rollover event is appropriate, based on the severity and type of collision. Vehicle damage by itself is not a good indicator of whether or not Side Air Bags should have deployed.

The Side Air Bags will not deploy in all rollover events. The rollover sensing system determines if a rollover event may be in progress and whether deployment is appropriate. In the event the vehicle experiences a rollover or near rollover event, and deployment of the Side Air Bags is appropriate, the rollover sensing system will also deploy the seat belt pretensioners on both sides of the vehicle.

The SABICs may help reduce the risk of partial or complete ejection of vehicle occupants through side windows in certain rollover or side impact events.

Air Bag System Components

NOTE:
The Occupant Restraint Controller (ORC) monitors the internal circuits and interconnecting wiring associated with electrical Air Bag System Components listed below:

- Occupant Restraint Controller (ORC)
- Air Bag Warning Light
- Steering Wheel and Column
- Instrument Panel
- Knee Impact Bolsters
- Driver and Front Passenger Air Bags
- Seat Belt Buckle Switch
- Supplemental Side Air Bags
- Front and Side Impact Sensors — If Equipped
- Seat Belt Pretensioners
- Seat Track Position Sensors

If A Deployment Occurs

The front air bags are designed to deflate immediately after deployment.

NOTE:
Front and/or side air bags will not deploy in all collisions. This does not mean something is wrong with the air bag system.

If you do have a collision which deploys the air bags, any or all of the following may occur:

- The air bag material may sometimes cause abrasions and/or skin reddening to the occupants as the air bags deploy and unfold. The abrasions are similar to friction rope burns or those you might get sliding along a carpet or gymnasium floor. They are not caused by contact with chemicals. They are not permanent and normally heal quickly. However, if you haven't healed significantly within a few days, or if you have any blistering, see your doctor immediately.
- As the air bags deflate, you may see some smoke-like particles. The particles are a normal by-product of the process that generates the non-toxic gas used for air bag inflation. These airborne particles may irritate the skin, eyes, nose, or throat. If you have skin or eye irritation, rinse the area with

cool water. For nose or throat irritation, move to fresh air. If the irritation continues, see your doctor. If these particles settle on your clothing, follow the garment manufacturer's instructions for cleaning.

Do not drive your vehicle after the air bags have deployed. If you are involved in another collision, the air bags will not be in place to protect you.

WARNING!
Deployed air bags and seat belt pretensioners cannot protect you in another collision. Have the air bags, seat belt pretensioners, and the seat belt retractor assemblies replaced by an authorized dealer immediately. Also, have the Occupant Restraint Controller System serviced as well.

NOTE:

- Air bag covers may not be obvious in the interior trim, but they will open during air bag deployment.
- After any collision, the vehicle should be taken to an authorized dealer immediately.

Enhanced Accident Response System

In the event of an impact, if the communication network remains intact, and the power remains intact, depending on the nature of the event, the ORC will determine whether to have the Enhanced Accident Response System perform the following functions:

- Cut off fuel to the engine (If Equipped)
- Cut off battery power to the electric motor (If Equipped)
- Flash hazard lights as long as the battery has power
- Turn on the interior lights, which remain on as long as the battery has power or for 15 minutes from the intervention of the Enhanced Accident Response System.
- Unlock the power door locks.

Your vehicle may also be designed to perform any of these other functions in response to the Enhanced Accident Response System:

- Turn off the Fuel Filter Heater, Turn off the HVAC Blower Motor, Close the HVAC Circulation Door

- Cut off battery power to the:
  - Engine
  - Electric Motor (if equipped)
  - Electric power steering
  - Brake booster
  - Electric park brake
  - Automatic transmission gear selector
  - Horn
  - Front wiper
  - Headlamp washer pump

NOTE:
After an accident, remember to cycle the ignition to the STOP (OFF/LOCK) position and remove the key from the ignition switch to avoid draining the battery. Carefully check the vehicle for fuel leaks in the engine compartment and on the ground near the engine compartment and fuel tank before resetting the system and starting the engine. If there are no fuel leaks or damage to the vehicle electrical devices (e.g. headlights) after an accident, reset the system by following the procedure described below. If you have any doubt, contact an authorized dealer.

Enhanced Accident Response System Reset Procedure

In order to reset the Enhanced Accident Response System functions after an event, the ignition switch must be changed from ignition START or ON/RUN to ignition OFF. Carefully check the vehicle for fuel leaks in the engine compartment and on the ground near the engine compartment and fuel tank before resetting the system and starting the engine.

Maintaining Your Air Bag System

WARNING!

- **Modifications to any part of the air bag system could cause it to fail when you need it. You could be injured if the air bag system is not there to protect you. Do not modify the components or wiring, including adding any kind of badges or stickers to the steering wheel hub trim cover or the upper passenger side of the instrument panel. Do not modify the front bumper, vehicle body structure, or add aftermarket side steps or running boards.**
- **It is dangerous to try to repair any part of the air bag system yourself. Be sure to tell anyone who works on your vehicle that it has an air bag system.**

(Continued)

WARNING! *(Continued)*

- **Do not attempt to modify any part of your air bag system. The air bag may inflate accidentally or may not function properly if modifications are made. Take your vehicle to an authorized dealer for any air bag system service. If your seat, including your trim cover and cushion, needs to be serviced in any way (including removal or loosening/tightening of seat attachment bolts), take the vehicle to an authorized dealer. Only manufacturer approved seat accessories may be used. If it is necessary to modify the air bag system for persons with disabilities, contact an authorized dealer.**

Event Data Recorder (EDR)

This vehicle is equipped with an event data recorder (EDR). The main purpose of an EDR is to record, in certain crash or near crash-like situations, such as an air bag deployment or hitting a road obstacle, data that will assist in understanding how a vehicle's systems performed. The EDR is designed to record data related to vehicle dynamics and safety systems for a short period of time, typically 30 seconds or less. The EDR in this vehicle is designed to record such data as:

- How various systems in your vehicle were operating;
- Whether or not the driver and passenger safety belts were buckled/fastened;
- How far (if at all) the driver was depressing the accelerator and/or brake pedal; and,
- How fast the vehicle was traveling.

These data can help provide a better understanding of the circumstances in which crashes and injuries occur.

NOTE:
EDR data are recorded by your vehicle only if a non-trivial crash situation occurs; no data are recorded by the EDR under normal driving conditions and no personal data (e.g., name, gender, age, and crash location) are recorded. However, other parties, such as law enforcement, could combine the EDR data with the type of personally identifying data routinely acquired during a crash investigation.

To read data recorded by an EDR, special equipment is required, and access to the vehicle or the EDR is needed. In addition to the vehicle manufacturer, other parties, such as law enforcement, that have the special equipment, can read the information if they have access to the vehicle or the EDR.

Child Restraints

Everyone in your vehicle needs to be buckled up at all times, including babies and children. Every state in the United States, and every Canadian province, requires that small children ride in proper restraint systems. This is the law, and you can be prosecuted for ignoring it.

Children 12 years or younger should ride properly buckled up in a rear seat, if available. According to crash statistics, children are safer when properly restrained in the rear seats rather than in the front.

WARNING!
In a collision, an unrestrained child can become a projectile inside the vehicle. The force required to hold even an infant on your lap could become so great that you could not hold the child, no matter how strong you are. The child and others could be badly injured or killed. Any child riding in your vehicle should be in a proper restraint for the child's size.

There are different sizes and types of restraints for children from newborn size to the child almost large enough for an adult safety belt. Always check the child seat Owner's Manual to make sure you have the correct seat for your child. Carefully read and follow all the instructions and warnings in the child restraint Owner's Manual and on all the labels attached to the child restraint.

Before buying any restraint system, make sure that it has a label certifying that it meets all applicable Safety Standards. You should also make sure that you can install it in the vehicle where you will use it.

NOTE:

- For additional information, refer to http://www.nhtsa.gov/parents-and-caregivers or call: 1–888–327–4236
- Canadian residents should refer to Transport Canada's website for additional information: http://www.tc.gc.ca/eng/motorvehiclesafety/safedrivers-child-safety-index-53.htm

Summary Of Recommendations For Restraining Children In Vehicles

	Child Size, Height, Weight Or Age	Recommended Type Of Child Restraint
Infants and Toddlers	Children who are two years old or younger and who have not reached the height or weight limits of their child restraint	Either an Infant Carrier or a Convertible Child Restraint, facing rearward in a rear seat of the vehicle
Small Children	Children who are at least two years old or who have outgrown the height or weight limit of their rear-facing child restraint	Forward-Facing Child Restraint with a five-point Harness, facing forward in a rear seat of the vehicle
Larger Children	Children who have outgrown their forward-facing child restraint, but are too small to properly fit the vehicle's seat belt	Belt Positioning Booster Seat and the vehicle seat belt, seated in a rear seat of the vehicle
Children Too Large for Child Restraints	Children 12 years old or younger, who have outgrown the height or weight limit of their booster seat	Vehicle Seat Belt, seated in a rear seat of the vehicle

Infant And Child Restraints

Safety experts recommend that children ride rear-facing in the vehicle until they are two years old or until they reach either the height or weight limit of their rear-facing child restraint. Two types of child restraints can be used rear-facing: infant carriers and convertible child seats.

The infant carrier is only used rear-facing in the vehicle. It is recommended for children from birth until they reach the weight or height limit of the infant carrier. Convertible child seats can be used either rear-facing or forward-facing in the vehicle. Convertible child seats often have a higher weight limit in the rear-facing direction than infant carriers do, so they can be used rear-facing by children who have outgrown their infant carrier but are still less than at least two years old. Children should remain rear-facing until they reach the highest weight or height allowed by their convertible child seat.

WARNING!

- **Never place a rear-facing child restraint in front of an air bag. A deploying passenger front air bag can cause death or serious injury to a child 12 years or younger, including a child in a rear-facing child restraint.**
- **Never install a rear-facing child restraint in the front seat of a vehicle. Only use a rear-facing child restraint in the rear seat. If the vehicle does not have a rear seat, do not transport a rear-facing child restraint in that vehicle.**

WARNING!

Do not install a rear-facing car seat using a rear support leg in this vehicle. The floor of this vehicle is not designed to manage the crash forces of this type of car seat. In a crash, the support leg may not function as it was designed by the car seat manufacturer, and your child may be more severely injured as a result.

Older Children And Child Restraints

Children who are two years old or who have outgrown their rear-facing convertible child seat can ride forward-facing in the vehicle. Forward-facing child seats and convertible child seats used in the forward-facing direction are for children who are over two years old or who have outgrown the rear-facing weight or height limit of their rear-facing convertible child seat. Children should remain in a forward-facing child seat with a harness for as long as possible, up to the highest weight or height allowed by the child seat.

All children whose weight or height is above the forward-facing limit for the child seat should use a belt-positioning booster seat until the vehicle's seat belts fit properly. If the child cannot sit with knees bent over the vehicle's seat cushion while the child's back is against the seatback, they should use a belt-positioning booster seat. The child and belt-positioning booster seat are held in the vehicle by the seat belt.

WARNING!

- **Improper installation can lead to failure of an infant or child restraint. It could come loose in a collision. The child could be badly injured or killed. Follow the child restraint manufacturer's directions exactly when installing an infant or child restraint.**
- **After a child restraint is installed in the vehicle, do not move the vehicle seat forward or rearward because it can loosen the child restraint attachments. Remove the child restraint before adjusting the vehicle seat position. When the vehicle seat has been adjusted, reinstall the child restraint.**
- **When your child restraint is not in use, secure it in the vehicle with the seat belt or LATCH anchorages, or remove it from the vehicle. Do not leave it loose in the vehicle. In a sudden stop or accident, it could strike the occupants or seatbacks and cause serious personal injury.**

Children Too Large For Booster Seats

Children who are large enough to wear the shoulder belt comfortably, and whose legs are long enough to bend over the front of the seat when their back is against the seatback, should use the seat belt in a rear seat. Use this simple 5-step test to decide whether the child can use the vehicle's seat belt alone:

1. Can the child sit all the way back against the back of the vehicle seat?
2. Do the child's knees bend comfortably over the front of the vehicle seat – while the child is still sitting all the way back?
3. Does the shoulder belt cross the child's shoulder between the neck and arm?
4. Is the lap part of the belt as low as possible, touching the child's thighs and not the stomach?
5. Can the child stay seated like this for the whole trip?

If the answer to any of these questions was "no," then the child still needs to use a booster seat in this vehicle. If the child is using the lap/shoulder belt, check seat belt fit periodically and make sure the seat belt buckle is latched. A child's squirming or slouching can move the belt out of position. If the shoulder belt contacts the face or neck, move the child closer to the center of the vehicle, or use a booster seat to position the seat belt on the child correctly.

WARNING!
Never allow a child to put the shoulder belt under an arm or behind their back. In a crash, the shoulder belt will not protect a child properly, which may result in serious injury or death. A child must always wear both the lap and shoulder portions of the seat belt correctly.

Recommendations For Attaching Child Restraints

Restraint Type	Combined Weight of the Child + Child Restraint	Use Any Attachment Method Shown With An "X" Below			
		LATCH – Lower Anchors Only	Seat Belt Only	LATCH – Lower Anchors + Top Tether Anchor	Seat Belt + Top Tether Anchor
Rear-Facing Child Restraint	Up to 65 lbs (29.5 kg)	X	X		
Rear-Facing Child Restraint	More than 65 lbs (29.5 kg)		X		
Forward-Facing Child Restraint	Up to 65 lbs (29.5 kg)			X	X
Forward-Facing Child Restraint	More than 65 lbs (29.5 kg)				X

Lower Anchors And Tethers For CHildren (LATCH) Restraint System

LATCH Label

Your vehicle is equipped with the child restraint anchorage system called LATCH, which stands for Lower Anchors and Tethers for CHildren. The LATCH system has three vehicle anchor points for installing LATCH-equipped child seats. There are two lower anchorages located at the back of the seat cushion where it meets the seatback and one top tether anchorage located behind the seating position. These anchorages are used to install LATCH-equipped child seats without using the vehicle's seat belts. Some seating positions may have a top tether anchorage but no lower anchorages. In these seating positions, the seat belt must be used with the top tether anchorage to install the child restraint. Please see the following table for more information.

LATCH Positions For Installing Child Restraints In This Vehicle

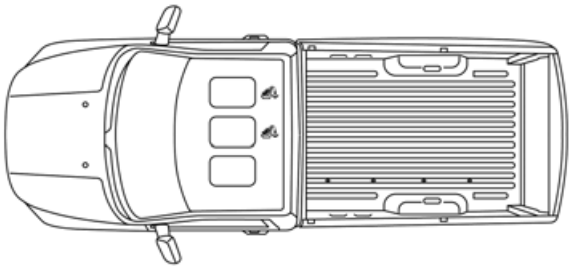

0502117857US

Regular Cab LATCH Positions

Top Tether Anchorage Symbol

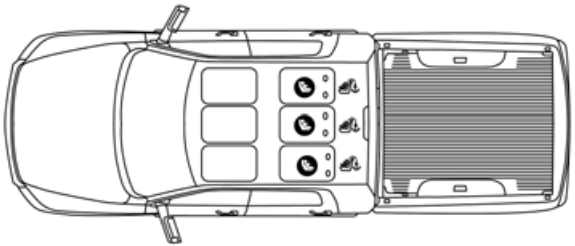

0502117863US

Crew Cab 60/40 Split Bench LATCH Positions

Top Tether Anchorage Symbol

Lower Anchorage Symbol (2 Anchorages Per Seating Position)

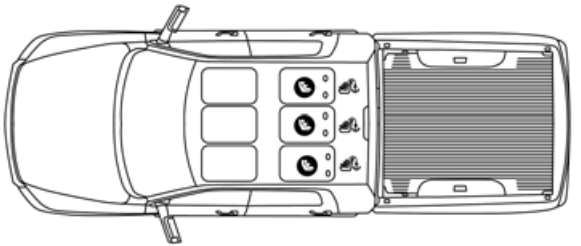

Mega Cab LATCH Positions

Top Tether Anchorage Symbol

Lower Anchorage Symbol (2 Anchorages Per Seating Position)

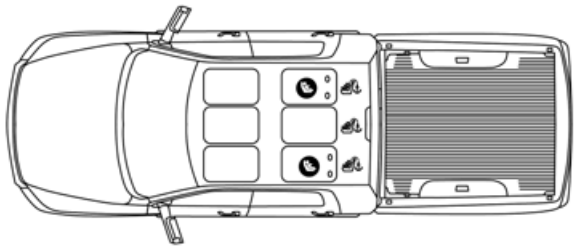

Crew Cab Full Bench LATCH Positions

Top Tether Anchorage Symbol

Lower Anchorage Symbol (2 Anchorages Per Seating Position)

Frequently Asked Questions About Installing Child Restraints With LATCH		
What is the weight limit (child's weight + weight of the child restraint) for using the LATCH anchorage system to attach the child restraint?	65 lbs (29.5 kg)	Use the LATCH anchorage system until the combined weight of the child and the child restraint is 65 lbs (29.5 kg). Use the seat belt and tether anchor instead of the LATCH system once the combined weight is more than 65 lbs (29.5 kg).
Can the LATCH anchorages and the seat belt be used together to attach a rear-facing or forward-facing child restraint?	No	Do not use the seat belt when you use the LATCH anchorage system to attach a rear-facing or forward-facing child restraint. Booster seats may be attached to the LATCH anchorages if allowed by the booster seat manufacturer. See your booster seat owner's manual for more information.
Can a child seat be installed in the center position using the inner LATCH lower anchorages from the outboard seating positions?	No – Crew Full Bench N/A – Mega / Crew Split Bench	Regular Cab Front / Crew Cab with full bench rear seat: use the seat belt and tether anchor to install a child seat in the center seating position Crew Cab with split bench rear seat / Mega Cab: Child restraints can be installed using the supplied lower anchorages for the center seating position.

Frequently Asked Questions About Installing Child Restraints With LATCH		
Can two child restraints be attached using a common lower LATCH anchorage?	No	Never “share” a LATCH anchorage with two or more child restraints. If the center position does not have dedicated LATCH lower anchorages, use the seat belt to install a child seat in the center position next to a child seat using the LATCH anchorages in an outboard position.
Can the rear-facing child restraint touch the back of the front passenger seat?	Yes	The child seat may touch the back of the front passenger seat if the child restraint manufacturer also allows contact. See your child restraint owner’s manual for more information.
Can the rear head restraints be removed?	Yes	The head restraints can be removed in every rear seating position if they interfere with the installation of the child restraint. Refer to “Head Restraints” in “Getting To Know Your Vehicle” for further information.

Locating The LATCH Anchorages

The lower anchorages are round bars that are found at the rear of the seat cushion where it meets the seat-back. They are just visible when you lean into the rear seat to install the child restraint. You will easily feel them if you run your finger along the gap between the seat-back and seat cushion.

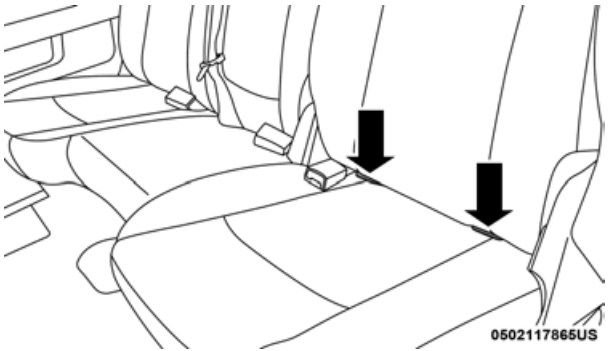

Mega Cab/Crew Cab Rear Outboard Seats Driver Side

Locating The Upper Tether Anchorages

Regular Cab models have tether strap anchorages behind the front center and right seats. Mega Cab and Crew Cab models have tether strap anchorages located behind each of the rear seats.

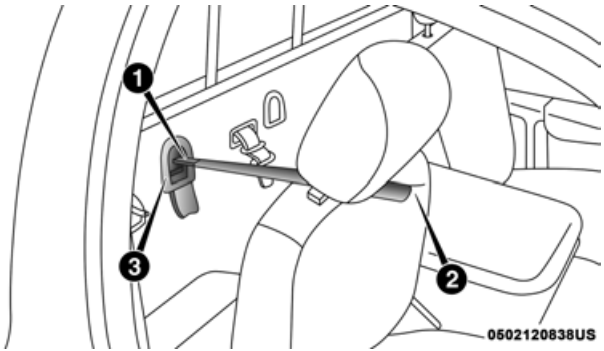

Regular Cab Tether Anchorages (Behind Covers)

1 — Tether Strap Hook
2 — Tether Strap To Child Restraint
3 — Tether Anchor

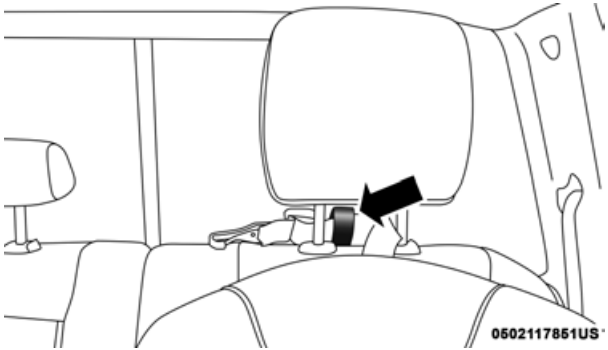

Crew Cab Outboard Tether Anchorage

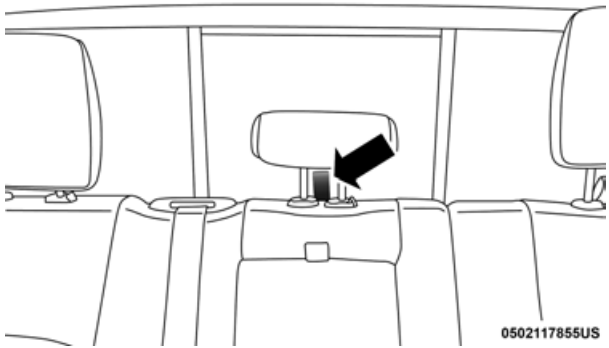

Crew Cab Center Tether Anchorage With Head Restraint In Raised Position

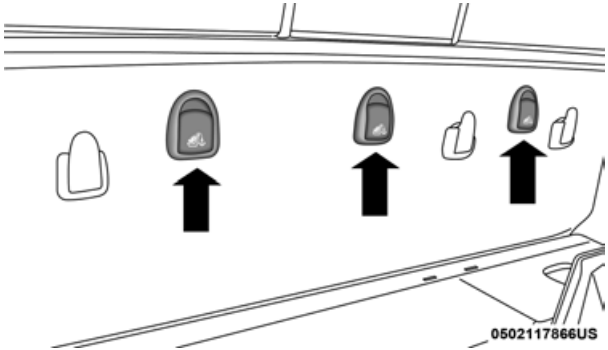

Mega Cab Tether Anchorages (Behind Covers)

LATCH-compatible child restraint systems will be equipped with a rigid bar or a flexible strap on each side. Each will have a hook or connector to attach to the lower anchorage and a way to tighten the connection to the anchorage. Forward-facing child restraints and some rear-facing child restraints will also be equipped with a tether strap. The tether strap will have a hook at the end to attach to the top tether anchorage and a way to tighten the strap after it is attached to the anchorage.

Center Seat LATCH

Regular Cab Or Crew Cab Full Bench Rear Seat: No Lower Center LATCH Anchorages Available

WARNING!

- **Do not install a child restraint in the center position using the LATCH system. This position is not approved for installing child seats using the LATCH attachments. You must use the seat belt and tether anchor to install a child seat in the center seating position.**
- **Never use the same lower anchorage to attach more than one child restraint. Please refer to "To Install A LATCH-Compatible Child Restraint" for typical installation instructions.**

Crew Cab Split Bench Rear Seat Or Mega Cab Rear Seat: Center LATCH Anchorages Available

If a child restraint installed in the center position blocks the seat belt webbing or buckle for the outboard position, do not use that outboard position. If a child seat in the center position blocks the outboard LATCH anchors or seat belt, do not install a child seat in that outboard position.

WARNING!
Never use the same lower anchorage to attach more than one child restraint. Please refer to "To Install A LATCH-Compatible Child Restraint" for typical installation instructions.

Always follow the directions of the child restraint manufacturer when installing your child restraint. Not all child restraint systems will be installed as described here.

To Install A LATCH-Compatible Child Restraint

If the selected seating position has a Switchable Automatic Locking Retractor (ALR) seat belt, stow the seat belt, following the instructions below. See the section "Installing Child Restraints Using the Vehicle Seat Belt" to check what type of seat belt each seating position has.

1. Loosen the adjusters on the lower straps and on the tether strap of the child seat so that you can more easily attach the hooks or connectors to the vehicle anchorages.
2. Place the child seat between the lower anchorages for that seating position. For some second row seats, you may need to recline the seat and / or raise the head restraint (if adjustable) to get a better fit. If the rear seat can be moved forward and rearward in the vehicle, you may wish to move it to its rear-most position to make room for the child seat. You may also move the front seat forward to allow more room for the child seat.
3. Attach the lower hooks or connectors of the child restraint to the lower anchorages in the selected seating position.
4. If the child restraint has a tether strap, connect it to the top tether anchorage. See the section "Installing Child Restraints Using the Top Tether Anchorage" for directions to attach a tether anchor.
5. Tighten all of the straps as you push the child restraint rearward and downward into the seat. Remove slack in the straps according to the child restraint manufacturer's instructions.
6. Test that the child restraint is installed tightly by pulling back and forth on the child seat at the belt path. It should not move more than 1 inch (25.4 mm) in any direction.

How To Stow An Unused Switchable-ALR (ALR) Seat Belt:

When using the LATCH attaching system to install a child restraint, stow all ALR seat belts that are not being used by other occupants or being used to secure child restraints. An unused belt could injure a child if they play with it and accidentally lock the seat belt retractor. Before installing a child restraint using the LATCH system, buckle the seat belt behind the child restraint and out of the child's reach. If the buckled seat belt interferes with the child restraint installation, instead of buckling it behind the child restraint, route the seat belt through the child restraint belt path and then buckle it. Do not lock the seat belt. Remind all children in the vehicle that the seat belts are not toys and that they should not play with them.

WARNING!

- **Improper installation of a child restraint to the LATCH anchorages can lead to failure of the restraint. The child could be badly injured or killed. Follow the child restraint manufacturer's directions exactly when installing an infant or child restraint.**
- **Child restraint anchorages are designed to withstand only those loads imposed by correctly-fitted child restraints. Under no circumstances are they to be used for adult seat belts, harnesses, or for attaching other items or equipment to the vehicle.**

Installing Child Restraints Using The Vehicle Seat Belt

Child restraint systems are designed to be secured in vehicle seats by lap belts or the lap belt portion of a lap/shoulder belt.

WARNING!
• **Improper installation or failure to properly secure a child restraint can lead to failure of the restraint. The child could be badly injured or killed.** • **Follow the child restraint manufacturer's directions exactly when installing an infant or child restraint.**

The seat belts in the passenger seating positions are equipped with either a Switchable Automatic Locking Retractor (ALR) or a cinching latch plate or both. Both types of seat belts are designed to keep the lap portion of the seat belt tight around the child restraint so that it is not necessary to use a locking clip. The ALR retractor can be "switched" into a locked mode by pulling all of the webbing out of the retractor and then letting the webbing retract back into the retractor. If it is locked, the ALR will make a clicking noise while the webbing is pulled back into the retractor. Refer to the "Automatic Locking Mode" description in "Switchable Automatic Locking Retractors (ALR)" under "Occupant Restraint Systems" for additional information on ALR. The cinching latch plate is designed to hold the lap portion of the seat belt tight when webbing is pulled tight and straight through a child restraint's belt path.

Please see the table below and the following sections for more information.

Lap/Shoulder Belt Systems For Installing Child Restraints In This Vehicle

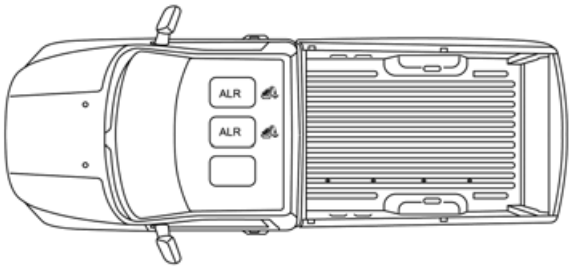

0502117859US

Regular Cab Automatic Locking Retractor (ALR) Locations

ALR = Switchable Automatic Locking Retractor

Top Tether Anchorage Symbol

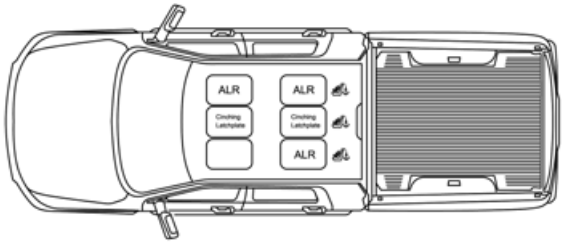

0502117860US

Mega Cab/Crew Cab Automatic Locking Retractor (ALR) Locations

Cinching Latchplate = Cinching Latchplate

ALR = Switchable Automatic Locking Retractor

Top Tether Anchorage Symbol

Frequently Asked Questions About Installing Child Restraints With Seat Belts		
What is the weight limit (child's weight + weight of the child restraint) for using the Tether Anchor with the seat belt to attach a forward facing child restraint?	Weight limit of the Child Restraint	Always use the tether anchor when using the seat belt to install a forward facing child restraint, up to the recommended weight limit of the child restraint.
Can the rear-facing child restraint touch the back of the front passenger seat?	Yes	Contact between the front passenger seat and the child restraint is allowed, if the child restraint manufacturer also allows contact.
Can the rear head restraints be removed?	Yes	The head restraints can be removed in every rear seating position if they interfere with the installation of the child restraint. Refer to "Head Restraints" in "Getting To Know Your Vehicle" for further information.
Can the buckle stalk be twisted to tighten the seat belt against the belt path of the child restraint?	Yes – Cinching Latch Plate No – ALR	In positions with cinching latch plates (CINCH), the buckle stalk may be twisted up to 3 full turns. Do not twist the buckle stalk in a seating position with an ALR retractor.

Installing A Child Restraint With A Switchable Automatic Locking Retractor (ALR):

Child restraint systems are designed to be secured in vehicle seats by lap belts or the lap belt portion of a lap/shoulder belt.

WARNING!

- **Improper installation or failure to properly secure a child restraint can lead to failure of the restraint. The child could be badly injured or killed.**
- **Follow the child restraint manufacturer's directions exactly when installing an infant or child restraint.**

1. **For Mega and Crew Cab Models**

   Place the child seat in the center of the seating position. For some second row seats, you may need to recline the seat and/or raise the head restraint (if adjustable) to get a better fit. If the rear seat can be moved forward and rearward in the vehicle, you may wish to move it to its rear-most position to make room for the child seat. You may also move the front seat forward to allow more room for the child seat.

   For Regular Cab Models

   Place the child seat in the center of the seating position. Move the vehicle seat as far rearward as possible to keep the child as far from the passenger air bag as possible.

2. Pull enough of the seat belt webbing from the retractor to pass it through the belt path of the child restraint. Do not twist the belt webbing in the belt path.

3. Slide the latch plate into the buckle until you hear a "click."

4. Pull on the webbing to make the lap portion tight against the child seat.

5. To lock the seat belt, pull down on the shoulder part of the belt until you have pulled all the seat belt webbing out of the retractor. Then, allow the webbing to retract back into the retractor. As the webbing retracts, you will hear a clicking sound. This means the seat belt is now in the Automatic Locking mode.

6. Try to pull the webbing out of the retractor. If it is locked, you should not be able to pull out any webbing. If the retractor is not locked, repeat step 5.

7. Finally, pull up on any excess webbing to tighten the lap portion around the child restraint while you push the child restraint rearward and downward into the vehicle seat.

8. If the child restraint has a top tether strap and the seating position has a top tether anchorage, connect the tether strap to the anchorage and tighten the tether strap. See the section "Installing Child Restraints Using the Top Tether Anchorage" for directions to attach a tether anchor.

9. Test that the child restraint is installed tightly by pulling back and forth on the child seat at the belt path. It should not move more than 1 inch (25.4 mm) in any direction.

Any seat belt system will loosen with time, so check the belt occasionally, and pull it tight if necessary.

Installing A Child Restraint With A Cinching Latch Plate (CINCH) — If Equipped:

Child restraint systems are designed to be secured in vehicle seats by lap belts or the lap belt portion of a lap/shoulder belt.

WARNING!

- **Improper installation or failure to properly secure a child restraint can lead to failure of the restraint. The child could be badly injured or killed.**
- **Follow the child restraint manufacturer's directions exactly when installing an infant or child restraint.**

1. Place the child seat in the center of the seating position. For some second row seats, you may need to recline the seat and / or raise the head restraint (if adjustable) to get a better fit. If the rear seat can be moved forward and rearward in the vehicle, you may wish to move it to its rear-most position to make room for the child seat. You may also move the front seat forward to allow more room for the child seat.

2. Next, pull enough of the seat belt webbing from the retractor to pass it through the belt path of the child restraint. Do not twist the belt webbing in the belt path.

3. Slide the latch plate into the buckle until you hear a "click."

4. Finally, pull up on any excess webbing to tighten the lap portion around the child restraint while you push the child restraint rearward and downward into the vehicle seat.

5. If the child restraint has a top tether strap and the seating position has a top tether anchorage, connect the tether strap to the anchorage and tighten the tether strap. See the section "Installing Child Restraints Using the Top Tether Anchorage" for directions to attach a tether anchor.

6. Test that the child restraint is installed tightly by pulling back and forth on the child seat at the belt path. It should not move more than 1 inch (25.4 mm) in any direction.

Any seat belt system will loosen with time, so check the belt occasionally, and pull it tight if necessary.

If the buckle or the cinching latch plate is too close to the belt path opening of the child restraint, you may have trouble tightening the seat belt. If this happens, disconnect the latch plate from the buckle and twist the short buckle-end belt up to three full turns to shorten it. Insert the latch plate into the buckle with the release button facing out, away from the child restraint. Repeat steps 4 to 6, above, to complete the installation of the child restraint.

If the belt still cannot be tightened after you shorten the buckle, disconnect the latch plate from the buckle, turn the buckle around one half turn, and insert the latch plate into the buckle again. If you still cannot make the child restraint installation tight, try a different seating position.

Installing Child Restraints Using The Top Tether Anchorage

WARNING!

Do not attach a tether strap for a rear-facing car seat to any location in front of the car seat, including the seat frame or a tether anchorage. Only attach the tether strap of a rear-facing car seat to the tether anchorage that is approved for that seating position, located behind the top of the vehicle seat. See the section "Lower Anchors and Tethers for CHildren (LATCH) Restraint System" for the location of approved tether anchorages in your vehicle.

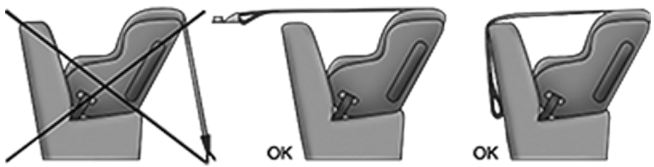

Regular and Mega Cab Trucks:

In the regular cab truck, the top tether anchorages are located behind the center and right passenger seats. In the mega cab truck, the top tether anchorages are located behind each rear seating position. There is a plastic cover over each anchorage. To attach the tether strap of the child restraint:

1. Place the child restraint on the seat and adjust the tether strap so that it will reach over the seat back, under the head restraint and to the tether anchor directly behind the seat.

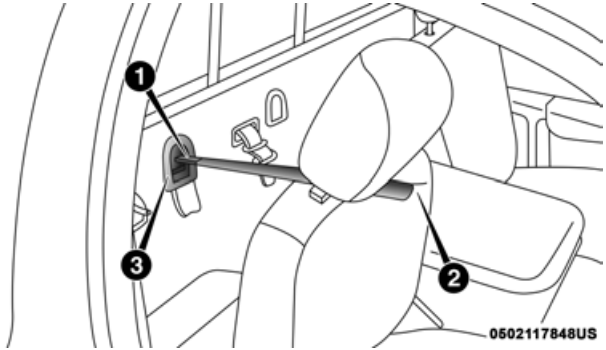

Regular Cab Tether Anchorages

1 — Tether Strap Hook
2 — Tether Strap To Child Restraint
3 — Tether Anchor

2. Route the tether strap to provide the most direct path between the anchorage and the child seat. The tether strap should go between the head restraint posts underneath the head restraint. You may need to adjust the head restraint to the upward position to pass the tether strap underneath the head restraint and between its posts.

3. Lift the cover (if so equipped), and attach the hook to the square opening in the sheet metal. Tighten the tether strap according to the child seat manufacturer's instructions.

WARNING!
Never place a rear-facing child restraint in front of an air bag. A deploying Passenger Front Air Bag can cause death or serious injury to a child 12 years or younger, including a child in a rear-facing child restraint.

Crew Cab Trucks:

The top tether anchorages in this vehicle are tether strap loops located between the rear glass and the back of the rear seat. There is a tether strap loop located behind each seating position. Follow the steps below to attach the tether strap of the child restraint.

Right Or Left Outboard Seats:

1. Raise the head restraint and reach between the rear seat and rear glass to access the tether strap loop.

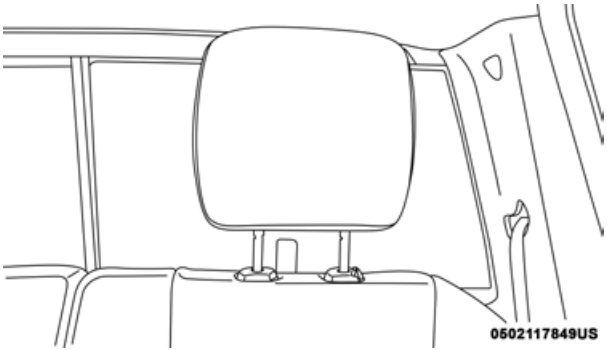

Head Restraint In Raised Position

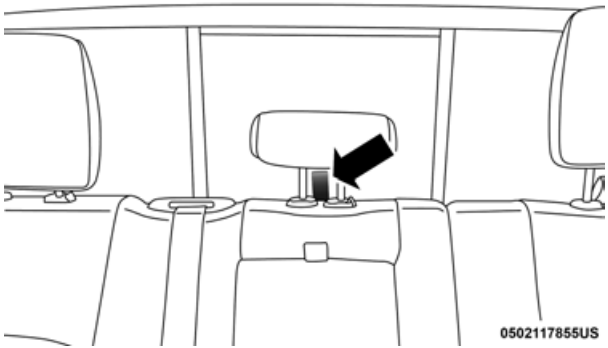

Tether Strap Loop With Center Head Restraint In Raised Position

2. Place a child restraint on the seat and adjust the tether strap so that it will reach over the seat back, under the head restraint, through the tether strap loop behind the seat and over to the tether strap loop behind the center seat.

3. Pass the tether strap hook under the head restraint behind the child seat, though the tether strap loop behind the seat and over to the center tether strap loop.

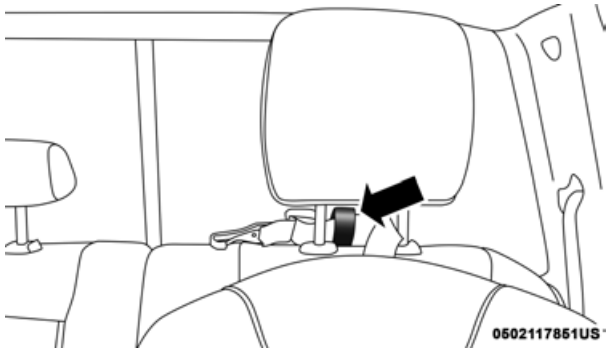

Tether Strap Through Outboard Tether Strap Loop

4. Attach the hook to the center tether strap loop (see diagram). Tighten the tether strap according to the child seat manufacturer's instructions.

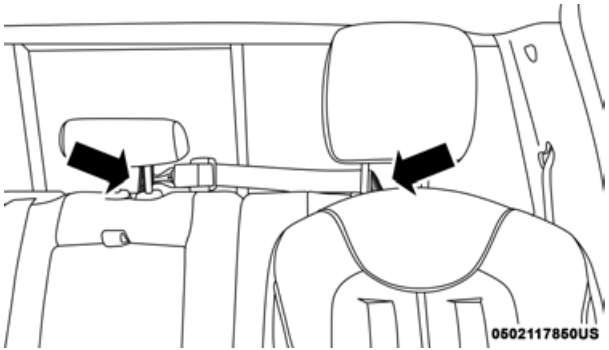

Tether Strap Through Outboard Tether Strap Loop And Attached To Center Tether Strap Loop

NOTE:
If there are child seats in both of the outboard (left and right) seating positions, the tether strap hooks of both child seats should be connected to the center tether strap loop. This is the correct way to tether two outboard child seats.

Center Seat:

1. Raise the head restraint and reach between the rear seat and rear glass to access the tether strap loop.

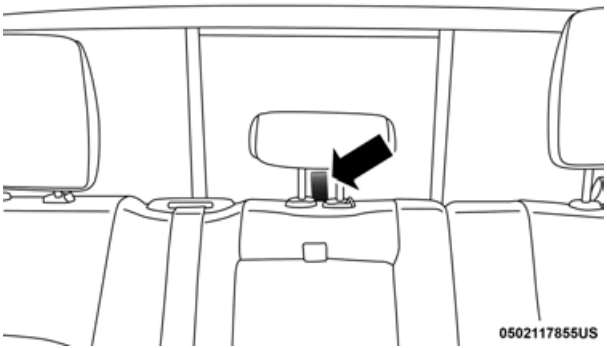

Tether Strap Loop With Head Restraint In Raised Position

2. Place a child restraint on the seat and adjust the tether strap so that it will reach over the seat back, under the head restraint, through the tether strap loop behind the seat and over to the tether strap loop behind either the right or left outboard seat.

3. Pass the tether strap hook under the head restraint behind the child seat, though the tether strap loop behind the seat and over to the right or left outboard tether strap loop.

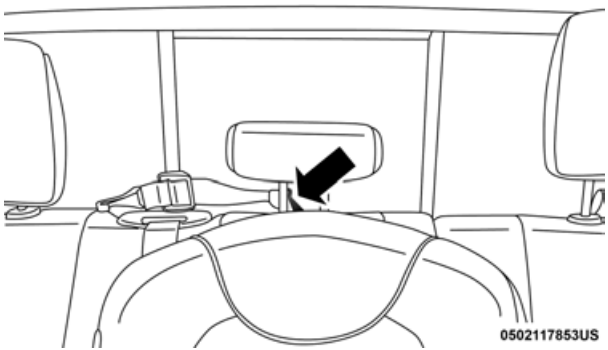

Tether Strap Through Center Tether Strap Loop

4. Attach the hook to the outboard tether strap loop (see diagram). Tighten the tether strap according to the child seat manufacturer's instructions.

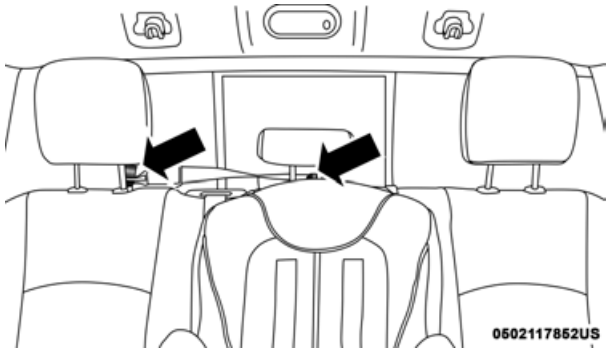

Tether Strap Through Center Tether Strap Loop And Attached To Outboard Tether Strap Loop

Installing Three Child Restraints:

1. Place a child restraint on each outboard rear seat. Route the tether straps following the directions for right and left seating positions, above.
2. Attach both hooks to the center tether strap loop, but do not tighten the straps yet.
3. Place a child restraint on the center rear seat. Route the tether strap following the directions for the center seating position, above.
4. Attach the hook to the outboard tether strap loop.
5. Tighten the tether straps according to the child seat manufacturer's instructions, tightening the right and left tether straps before the center tether strap.

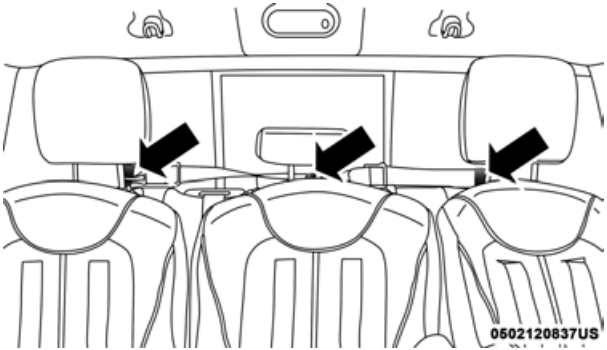

Outboard And Center Seating Positions Shown

WARNING!
• **An incorrectly anchored tether strap could lead to increased head motion and possible injury to the child. Use only the anchorage position directly behind the child seat to secure a child restraint top tether strap.** • **If your vehicle is equipped with a split rear seat, make sure the tether strap does not slip into the opening between the seatbacks as you remove slack in the strap.**

Transporting Pets

Air Bags deploying in the front seat could harm your pet. An unrestrained pet will be thrown about and possibly injured, or injure a passenger during panic braking or in a collision.

Pets should be restrained in the rear seat (if equipped) in pet harnesses or pet carriers that are secured by seat belts.

SAFETY TIPS

Transporting Passengers

NEVER TRANSPORT PASSENGERS IN THE CARGO AREA.

WARNING!

- **Do not leave children or animals inside parked vehicles in hot weather. Interior heat build-up may cause serious injury or death.**
- **It is extremely dangerous to ride in a cargo area, inside or outside of a vehicle. In a collision, people riding in these areas are more likely to be seriously injured or killed.**
- **Do not allow people to ride in any area of your vehicle that is not equipped with seats and seat belts.**
- **Be sure everyone in your vehicle is in a seat and using a seat belt properly.**

Exhaust Gas

WARNING!

Exhaust gases can injure or kill. They contain carbon monoxide (CO), which is colorless and odorless. Breathing it can make you unconscious and can eventually poison you. To avoid breathing (CO), follow these safety tips:

- **Do not run the engine in a closed garage or in confined areas any longer than needed to move your vehicle in or out of the area.**
- **If you are required to drive with the trunk/liftgate/rear doors open, make sure that all windows are closed and the climate control BLOWER switch is set at high speed. DO NOT use the recirculation mode.**
- **If it is necessary to sit in a parked vehicle with the engine running, adjust your heating or cooling controls to force outside air into the vehicle. Set the blower at high speed.**

The best protection against carbon monoxide entry into the vehicle body is a properly maintained engine exhaust system.

Whenever a change is noticed in the sound of the exhaust system, when exhaust fumes can be detected inside the vehicle, or when the underside or rear of the vehicle is damaged, have a competent mechanic inspect the complete exhaust system and adjacent body areas for broken, damaged, deteriorated, or mispositioned parts. Open seams or loose connections could permit exhaust fumes to seep into the passenger compartment. In addition, inspect the exhaust system each time the vehicle is raised for lubrication or oil change. Replace as required.

Safety Checks You Should Make Inside The Vehicle

Seat Belts

Inspect the seat belt system periodically, checking for cuts, frays, and loose parts. Damaged parts must be replaced immediately. Do not disassemble or modify the system.

Front seat belt assemblies must be replaced after a collision. Rear seat belt assemblies must be replaced after a collision if they have been damaged (i.e., bent retractor, torn webbing, etc.). If there is any question regarding seat belt or retractor condition, replace the seat belt.

Air Bag Warning Light

The Air Bag warning light will turn on for four to eight seconds as a bulb check when the ignition switch is first turned to ON/RUN. If the light is either not on during starting, stays on, or turns on while driving, have the system inspected at an authorized dealer as soon as possible. After the bulb check, this light will illuminate with a single chime when a fault with the Air Bag System has been detected. It will stay on until the fault is removed. If the light comes on intermittently or remains on while driving, have an authorized dealer service the vehicle immediately.

Refer to “Occupant Restraint Systems” in “Safety” for further information.

Defroster

Check operation by selecting the defrost mode and place the blower control on high speed. You should be able to feel the air directed against the windshield. See an authorized dealer for service if your defroster is inoperable.

Floor Mat Safety Information

Always use floor mats designed to fit your vehicle. Only use a floor mat that does not interfere with the operation of the accelerator, brake or clutch pedals. Only use a floor mat that is securely attached using the floor mat fasteners so it cannot slip out of position and interfere with the accelerator, brake or clutch pedals or impair safe operation of your vehicle in other ways.

WARNING!

An improperly attached, damaged, folded, or stacked floor mat, or damaged floor mat fasteners may cause your floor mat to interfere with the accelerator, brake, or clutch pedals and cause a loss of vehicle control. To prevent SERIOUS INJURY or DEATH:

- **ALWAYS securely attach your floor mat using the floor mat fasteners. DO NOT install your floor mat upside down or turn your floor mat over. Lightly pull to confirm mat is secured using the floor mat fasteners on a regular basis.**

(Continued)

WARNING! *(Continued)*

- **ALWAYS REMOVE THE EXISTING FLOOR MAT FROM THE VEHICLE before installing any other floor mat. NEVER install or stack an additional floor mat on top of an existing floor mat.**
- **ONLY install floor mats designed to fit your vehicle. NEVER install a floor mat that cannot be properly attached and secured to your vehicle. If a floor mat needs to be replaced, only use a FCA approved floor mat for the specific make, model, and year of your vehicle.**
- **ONLY use the driver's side floor mat on the driver's side floor area. To check for interference, with the vehicle properly parked with the engine off, fully depress the accelerator, the brake, and the clutch pedal (if present) to check for interference. If your floor mat interferes with the operation of any pedal, or is not secure to the floor, remove the floor mat from the vehicle and place the floor mat in your trunk.**
- **ONLY use the passenger's side floor mat on the passenger's side floor area.**

(Continued)

WARNING! *(Continued)*

- **ALWAYS make sure objects cannot fall or slide into the driver's side floor area when the vehicle is moving. Objects can become trapped under accelerator, brake, or clutch pedals and could cause a loss of vehicle control.**
- **NEVER place any objects under the floor mat (e.g., towels, keys, etc.). These objects could change the position of the floor mat and may cause interference with the accelerator, brake, or clutch pedals.**
- **If the vehicle carpet has been removed and re-installed, always properly attach carpet to the floor and check the floor mat fasteners are secure to the vehicle carpet. Fully depress each pedal to check for interference with the accelerator, brake, or clutch pedals then re-install the floor mats.**
- **It is recommended to only use mild soap and water to clean your floor mats. After cleaning, always check your floor mat has been properly installed and is secured to your vehicle using the floor mat fasteners by lightly pulling mat.**

Periodic Safety Checks You Should Make Outside The Vehicle

Tires

Examine tires for excessive tread wear and uneven wear patterns. Check for stones, nails, glass, or other objects lodged in the tread or sidewall. Inspect the tread for cuts and cracks. Inspect sidewalls for cuts, cracks, and bulges. Check the wheel bolts for tightness. Check the tires (including spare) for proper cold inflation pressure.

Lights

Have someone observe the operation of brake lights and exterior lights while you work the controls. Check turn signal and high beam indicator lights on the instrument panel.

Door Latches

Check for proper closing, latching, and locking.

Fluid Leaks

Check area under the vehicle after overnight parking for fuel, coolant, oil, or other fluid leaks. Also, if gasoline fumes are detected or if fuel, or brake fluid leaks are suspected. The cause should be located and corrected immediately.

STARTING AND OPERATING

STARTING THE ENGINE

Before starting your vehicle, adjust your seat, adjust both inside and outside mirrors, and fasten your seat belt.

The starter should not be operated for more than 10-second intervals. Waiting a few seconds between such intervals will protect the starter from overheating.

WARNING!

- **When leaving the vehicle, always make sure the keyless ignition node is in the "OFF" mode, remove the key fob from the vehicle and lock the vehicle.**
- **Never leave children alone in a vehicle, or with access to an unlocked vehicle. Allowing children to be in a vehicle unattended is dangerous for a number of reasons. A child or others could be seriously or fatally injured. Children should be warned not to touch the parking brake, brake pedal or the gear selector.**

(Continued)

WARNING! ***(Continued)***

- **Do not leave the key fob in or near the vehicle, or in a location accessible to children, and do not leave the ignition of a vehicle equipped with Keyless Enter-N-Go in the ACC or ON/RUN mode. A child could operate power windows, other controls, or move the vehicle.**
- **Do not leave children or animals inside parked vehicles in hot weather. Interior heat build-up may cause serious injury or death.**

Automatic Transmission

Start the engine with the transmission in PARK position. Apply the brake before shifting into any driving range.

NOTE:

- This vehicle is equipped with a transmission shift interlocking system. The brake pedal must be pressed to shift out of PARK.
- If equipped with an 8-speed transmission, starting the vehicle in NEUTRAL is not possible unless the Manual Park Release has been activated. For the Manual Park Release operation refer to Manual Park Release in "In Case Of Emergency".

Tip Start Feature

Do not press the accelerator. Cycle the ignition switch briefly to the START position and release it. The starter motor will continue to run and will automatically disengage when the engine is running.

Keyless Enter-N-Go — Ignition

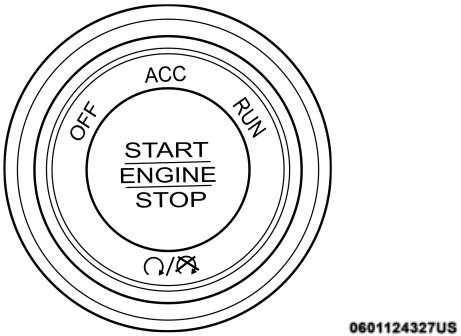

Keyless Push Button Ignition

This feature allows the driver to operate the ignition switch with the push of a button, as long as the Remote Start/ Keyless Enter-N-Go key fob is in the passenger compartment.

Normal Starting Using ENGINE START/STOP Button

To Turn On The Engine Using The ENGINE START/STOP Button

1. The transmission must be in PARK.
2. Press and hold the brake pedal while pushing the ENGINE START/STOP button once.
3. The system takes over and attempts to start the vehicle. If the vehicle fails to start, the starter will disengage automatically after 10 seconds.
4. If you wish to stop the cranking of the engine prior to the engine starting, push the button again.

NOTE:
Normal starting of either a cold or a warm engine is obtained without pumping or pressing the accelerator pedal.

To Turn Off The Engine Using ENGINE START/STOP Button

1. Place the gear selector in PARK, then push and release the ENGINE START/STOP button.
2. The ignition will return to the OFF mode.
3. If the gear selector is not in PARK, the ENGINE START/STOP button must be held for two seconds or three short pushes in a row with the vehicle speed above 5 MPH (8 km/h) before the engine will shut off. The ignition will remain in the ACC mode until the gear selector is in PARK and the button is pushed twice to the OFF mode.
4. If the gear selector is not in PARK and the ENGINE START/STOP button is pushed once with the vehicle speed above 5 MPH (8 km/h), the instrument cluster will display a "**Vehicle Not In Park**" message and the engine will remain running. Never leave a vehicle out of the PARK position, or it could roll.

NOTE:
If the gear selector is not in PARK, and the ENGINE START/STOP button is pushed once with the vehicle speed below 5 MPH (8 km/h), the engine will shut off and the ignition will remain in the ACC position. If vehicle speed drops below 1.2 MPH (1.9 km/h), the vehicle may AutoPark. See AutoPark section for further details.

ENGINE START/STOP Button Functions — With Driver's Foot OFF The Brake Pedal (In PARK Or NEUTRAL Position)

The ENGINE START/STOP button operates similar to an ignition switch. It has three modes: OFF, ACC, and RUN. To change the ignition modes without starting the vehicle and use the accessories, follow these directions:

1. Start with the ignition in the OFF mode.
2. Push the ENGINE START/STOP button once to place the ignition to the ACC mode.
3. Push the ENGINE START/STOP button a second time to place the ignition to the RUN mode.
4. Push the ENGINE START/STOP button a third time to return the ignition to the OFF mode.

AutoPark — Rotary Shifter and 8-Speed Transmission Only

AutoPark is a supplemental feature to assist in placing the vehicle in PARK should the situations on the following pages occur. It is a back up system and should not be relied upon as the primary method by which the driver shifts the vehicle into PARK.

The conditions under which AutoPark will engage are outlined on the following pages.

WARNING!

- **Driver inattention could lead to failure to place the vehicle in PARK. ALWAYS DO A VISUAL CHECK that your vehicle is in PARK by verifying that a solid (not blinking) "P" is indicated in the Instrument Cluster Display and near the gear selector. If the "P" indicator is blinking, your vehicle is not in PARK. As an added precaution, always apply the parking brake when exiting the vehicle.**
- **AutoPark is a supplemental feature. It is not designed to replace the need to shift your vehicle into PARK. It is a back up system and should not be relied upon as the primary method by which the driver shifts the vehicle into PARK.**

If the vehicle is not in PARK and the driver turns off the engine, the vehicle may AutoPark.

AutoPark will engage when all of these conditions are met:

- Vehicle is equipped with a rotary shifter and an 8-speed transmission
- Vehicle is not in PARK
- Vehicle Speed is 1.2 MPH (1.9 km/h) or less
- Ignition switched from RUN to ACC

NOTE:
For Keyless Go equipped vehicles, The engine will turn off and the ignition switch will change to ACC mode. After 30 minutes the ignition switches to OFF automatically, unless the driver turns the ignition switch OFF.

If the vehicle is not in PARK and the driver exits the vehicle with the engine running, the vehicle may AutoPark.

AutoPark will engage when all of these conditions are met:

- Vehicle is equipped with a rotary shifter and an 8-speed transmission
- Vehicle is not in PARK
- Vehicle speed is 1.2 MPH (1.9 km/h) or less
- Driver's seat belt is unbuckled
- Driver's door is ajar
- Brake Pedal is not depressed

The MESSAGE "**AutoPark Engaged Shift to P then Shift to Gear**" will display in the instrument cluster.

NOTE:
In some cases the ParkSense graphic will be displayed in the instrument cluster, causing the "**AutoPark Engaged Shift to P then Shift to Gear**" to not be seen. In these cases, the shifter must be returned to "P" to select desired gear.

If the driver shifts into PARK while moving, the vehicle may AutoPark.

AutoPark will engage **ONLY**when vehicle speed is 1.2 MPH (1.9 km/h) or less.

The MESSAGE "**Vehicle Speed is Too High to Shift to P**"will be displayed in the instrument cluster if vehicle speed is above 1.2 MPH (1.9 km/h).

WARNING!
If vehicle speed is above 1.2 MPH (1.9 km/h), the transmission will default to NEUTRAL until the vehicle speed drops below 1.2 MPH (1.9 km). A vehicle left in the NEUTRAL position can roll. As an added precaution, always apply the parking brake when exiting the vehicle.

4WD LOW — If Equipped

AutoPark will be disabled when operating the vehicle in 4WD LOW.

The MESSAGE "**AutoPark Disabled**" will be displayed in the instrument cluster.

Additional customer warnings will be given when all of these conditions are met:

- Vehicle is not in PARK
- Driver's Door is ajar
- Vehicle is in 4WD LOW range

The MESSAGE "**AutoPark Not Engaged**" will be displayed in the instrument cluster. A warning chime will continue until you shift the vehicle into PARK or the Driver's Door is closed.

ALWAYS DO A VISUAL CHECKthat your vehicle is in PARK by looking for the "P" in the Instrument Cluster Display and near the shifter. As an added precaution, always apply the parking brake when exiting the vehicle.

If Engine Fails To Start

If the engine fails to start after you have followed the "Normal Starting" procedure, it may be flooded. Push the accelerator pedal all the way to the floor and hold it there while the engine is cranking. This should clear any excess fuel in case the engine is flooded.

The starter motor will engage automatically, run for 10 seconds, and then disengage. Once this occurs, release the

accelerator pedal and the brake pedal, wait 10 to 15 seconds, then repeat the "Normal Starting" procedure.

WARNING!

- **Never pour fuel or other flammable liquid into the throttle body air inlet opening in an attempt to start the vehicle. This could result in flash fire causing serious personal injury.**
- **Do not attempt to push or tow your vehicle to get it started. Vehicles equipped with an automatic transmission cannot be started this way. Unburned fuel could enter the catalytic converter and once the engine has started, ignite and damage the converter and vehicle.**
- **If the vehicle has a discharged battery, booster cables may be used to obtain a start from a booster battery or the battery in another vehicle. This type of start can be dangerous if done improperly. Refer to "Jump Starting Procedure" in "In Case Of Emergency" for further information.**

CAUTION!

To prevent damage to the starter, do not crank the engine for more than 10 seconds at a time. Wait 10 to 15 seconds before trying again.

If the engine has been flooded, it may start to run, but not have enough power to continue running when the ignition button/key is released. If this occurs, continue cranking with the accelerator pedal pushed all the way to the floor. Release the accelerator pedal and the ignition button/key once the engine is running smoothly.

If the engine shows no sign of starting after a 10 second period of engine cranking with the accelerator pedal held to the floor, wait 10 to 15 seconds, then repeat the "Normal Starting" procedure.

Cold Weather Operation (Below –22°F Or –30°C)

To ensure reliable starting at these temperatures, use of an externally powered electric engine block heater (available from your authorized dealer) is recommended.

After Starting

The idle speed is controlled automatically, and it will decrease as the engine warms up.

ENGINE BLOCK HEATER — IF EQUIPPED

The engine block heater warms the engine, and permits quicker starts in cold weather. Connect the cord to a standard 110-115 Volt AC electrical outlet with a grounded, three-wire extension cord.

The engine block heater cord is routed through the grille by the right front tow hook.

It includes a removable cap that is secured by a tethered strap. It also has a c-clip that is used for storage when not in use for the winter months. During winter months, remove the heater cord wiring assembly from itself on the c-clip.

The engine block heater must be plugged in at least one hour to have an adequate warming effect on the engine.

WARNING!
Remember to disconnect the engine block heater cord before driving. Damage to the 110-115 Volt electrical cord could cause electrocution.

ENGINE BREAK-IN RECOMMENDATIONS

A long break-in period is not required for the engine and drivetrain (transmission and axle) in your vehicle.

Drive moderately during the first 300 miles (500 km). After the initial 60 miles (100 km), speeds up to 50 or 55 mph (80 or 90 km/h) are desirable.

While cruising, brief full-throttle acceleration within the limits of local traffic laws contributes to a good break-in. Wide-open throttle acceleration in low gear can be detrimental and should be avoided.

The engine oil installed in the engine at the factory is a high-quality energy conserving type lubricant. Oil changes should be consistent with anticipated climate conditions under which vehicle operations will occur. For the recommended viscosity and quality grades, refer to “Fluids And Lubricants” in “Technical Specifications”.

CAUTION!
Never use Non-Detergent Oil or Straight Mineral Oil in the engine or damage may result.

NOTE:
A new engine may consume some oil during its first few thousand miles (kilometers) of operation. This should be considered a normal part of the break-in and not interpreted as a problem. Please check your oil level with the engine oil indicator often during the break in period. Add oil as required.

PARKING BRAKE

Before leaving the vehicle, make sure that the parking brake is fully applied. Also, be certain to leave the transmission in PARK.

The foot operated parking brake is located below the lower left corner of the instrument panel. To apply the park brake, firmly push the park brake pedal fully. To release the parking brake, pull the parking brake release handle.

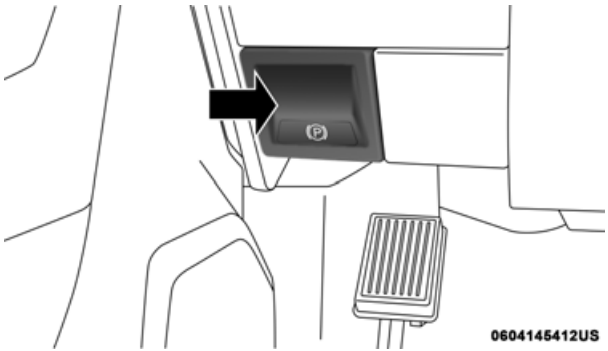

Parking Brake Release

When the parking brake is applied with the ignition switch ON, the "Brake Warning Light" in the instrument cluster will illuminate.

NOTE:

- When the parking brake is applied and the transmission is placed in gear, the "Brake Warning Light" will flash. If vehicle speed is detected, a chime will sound to alert the driver. Fully release the parking brake before attempting to move the vehicle.
- This light only shows that the parking brake is applied. It does not show the degree of brake application.

When parking on a hill, it is important to turn the front wheels toward the curb on a downhill grade and away from the curb on an uphill grade. Apply the parking brake before placing the gear selector in PARK, otherwise the load on the transmission locking mechanism may make it difficult to move the gear selector out of PARK. The parking brake should always be applied whenever the driver is not in the vehicle.

WARNING!

- **Never use the PARK position as a substitute for the parking brake. Always apply the parking brake fully when parked to guard against vehicle movement and possible injury or damage.**
- **Never leave children alone in a vehicle, or with access to an unlocked vehicle. Leaving unattended children in a vehicle is dangerous for a number of reasons. A child or others could be seriously or fatally injured.**
- **Do not leave the key fob in or near the vehicle, or in a location accessible to children, and do not leave a vehicle equipped with Keyless Enter-N-Go in the ACC or ON/RUN mode. A child could operate power windows, other controls, or move the vehicle.**
- **Be sure the parking brake is fully disengaged before driving; failure to do so can lead to brake failure and a collision.**
- **Always fully apply the parking brake when leaving your vehicle or it may roll and cause damage or injury. Also, be certain to leave the transmission in PARK. Failure to do so may cause the vehicle to roll and cause damage or injury.**

CAUTION!

If the Brake System Warning Light remains on with the parking brake released, a brake system malfunction is indicated. Have the brake system serviced by an authorized dealer immediately.

AUTOMATIC TRANSMISSION

WARNING!

- **Never use the PARK position as a substitute for the parking brake. Always apply the parking brake fully when exiting the vehicle to guard against vehicle movement and possible injury or damage.**
- **Your vehicle could move and injure you and others if it is not in PARK. Check by trying to move the transmission gear selector out of PARK with the brake pedal released. Make sure the transmission is in PARK before exiting the vehicle.**

(Continued)

WARNING! *(Continued)*

- **The transmission may not engage PARK if the vehicle is moving. Always bring the vehicle to a complete stop before shifting to PARK, and verify that the transmission gear position indicator solidly indicates PARK (P) without blinking. Ensure that the vehicle is completely stopped, and the PARK position is properly indicated, before exiting the vehicle.**
- **It is dangerous to shift out of PARK or NEUTRAL if the engine speed is higher than idle speed. If your foot is not firmly pressing the brake pedal, the vehicle could accelerate quickly forward or in reverse. You could lose control of the vehicle and hit someone or something. Only shift into gear when the engine is idling normally and your foot is firmly pressing the brake pedal.**
- **Unintended movement of a vehicle could injure those in or near the vehicle. As with all vehicles, you should never exit a vehicle while the engine is running. Before exiting a vehicle, always come to a complete stop, then apply the parking brake, shift the transmission into PARK, and turn the ignition OFF. When the ignition is in the OFF mode, the transmission is locked in PARK, securing the vehicle against unwanted movement.**

(Continued)

WARNING! *(Continued)*

- **When exiting the vehicle, always make sure the ignition is in the OFF mode, remove the key fob from the vehicle, and lock the vehicle.**
- **Never leave children alone in a vehicle, or with access to an unlocked vehicle. Allowing children to be in a vehicle unattended is dangerous for a number of reasons. A child or others could be seriously or fatally injured. Children should be warned not to touch the parking brake, brake pedal or the transmission gear selector.**
- **Do not leave the key fob in or near the vehicle (or in a location accessible to children), and do not leave the ignition in the ACC or ON/RUN mode. A child could operate power windows, other controls, or move the vehicle.**

CAUTION!
• **Shift into or out of PARK or REVERSE only after the vehicle has come to a complete stop.** • **Do not shift between PARK, REVERSE, NEUTRAL, or DRIVE when the engine is above idle speed.** • **Before shifting into any gear, make sure your foot is firmly pressing the brake pedal.**

NOTE:
You must press and hold the brake pedal while shifting out of PARK.

Ignition Park Interlock

This vehicle is equipped with an Ignition Park Interlock which requires the transmission to be in PARK before the ignition can be turned to the OFF mode. This helps the driver avoid inadvertently leaving the vehicle without placing the transmission in PARK. This system also locks the transmission in PARK whenever the ignition is in the OFF mode.

NOTE:
The transmission is NOT locked in PARK when the ignition is in the ACC mode (even though the engine will be off). Ensure that the transmission is in PARK, and the ignition is OFF (not in ACC mode) before exiting the vehicle.

Brake/Transmission Shift Interlock System

This vehicle is equipped with a Brake Transmission Shift Interlock System (BTSI) that holds the transmission gear selector in PARK unless the brakes are applied. To shift the transmission out of PARK, the engine must be running and the brake pedal must be pressed.

The brake pedal must also be pressed to shift from NEUTRAL into DRIVE or REVERSE when the vehicle is stopped or moving at low speeds.

Eight-Speed Automatic Transmission

The transmission is controlled using a rotary electronic gear selector located on the instrument panel. The transmission gear range (PRND) is displayed both above the gear selector and in the instrument cluster. To select a gear range, simply rotate the gear selector. You must press the brake pedal to shift the transmission out of PARK (or NEUTRAL, when the vehicle is stopped or moving at low speeds). To shift past multiple gear ranges at once (such as PARK to DRIVE), simply rotate the gear selector to the appropriate detent. Select the DRIVE range for normal driving.

NOTE:
In the event of a mismatch between the gear selector position and the actual transmission gear (for example, driver selects PARK while driving), the position indicator will blink continuously until the selector is returned to the proper position, or the requested shift can be completed.

The electronically-controlled transmission adapts its shift schedule based on driver inputs, along with environmental and road conditions. The transmission electronics are self-calibrating; therefore, the first few shifts on a new vehicle may be somewhat abrupt. This is a normal condition, and precision shifts will develop within a few hundred miles (kilometers).

Only shift from DRIVE to PARK or REVERSE when the accelerator pedal is released and the vehicle is stopped. Be sure to keep your foot on the brake pedal when shifting between these gears.

The transmission gear selector has only PARK, REVERSE, NEUTRAL, and DRIVE positions. Manual downshifts can be made using the Electronic Range Select (ERS) shift control. Pressing the GEAR-/GEAR+ switches (on the steering wheel) while in the DRIVE position will select the highest available transmission gear, and will display that gear limit in the instrument cluster as 1, 2, 3, etc. Refer to "Electronic Range Select (ERS) Operation" in this section for further information. Some models will display both the selected gear limit, and the actual current gear, while in ERS mode.

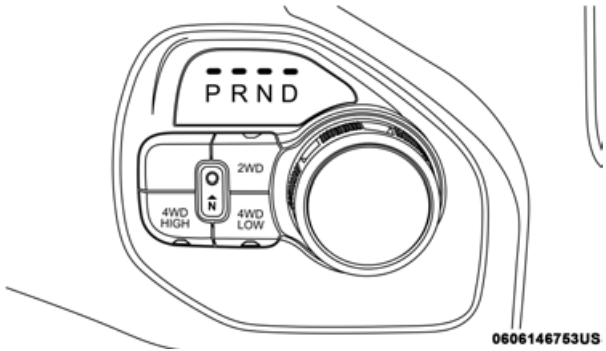

Electronic Transmission Gear Selector

Gear Ranges

Do not depress the accelerator pedal when shifting from PARK or NEUTRAL into another gear range.

NOTE:
After selecting any gear range, wait a moment to allow the selected gear to engage before accelerating. This is especially important when the engine is cold.

PARK (P)

This range supplements the parking brake by locking the transmission. The engine can be started in this range. Never attempt to use PARK while the vehicle is in motion. Apply the parking brake when exiting the vehicle in this range.

When parking on a level surface, you may shift the transmission into PARK first, and then apply the parking brake.

When parking on a hill, apply the parking brake before shifting the transmission to PARK. As an added precaution, turn the front wheels toward the curb on a downhill grade and away from the curb on an uphill grade.

NOTE:
On four-wheel drive vehicles be sure that the transfer case is in a drive position.

When exiting the vehicle, always:

- Apply the parking brake.
- Shift the transmission into PARK.
- Turn the engine OFF.
- Remove the key fob.

WARNING!

- **Never use the PARK position as a substitute for the parking brake. Always apply the parking brake fully when exiting the vehicle to guard against vehicle movement and possible injury or damage.**
- **Your vehicle could move and injure you and others if it is not in PARK. Check by trying to move the transmission gear selector out of PARK with the brake pedal released. Make sure the transmission is in PARK before exiting the vehicle.**
- **The transmission may not engage PARK if the vehicle is moving. Always bring the vehicle to a complete stop before shifting to PARK, and verify that the transmission gear position indicator solidly indicates PARK (P) without blinking. Ensure that the vehicle is completely stopped, and the PARK position is properly indicated, before exiting the vehicle.**
- **It is dangerous to shift out of PARK or NEUTRAL if the engine speed is higher than idle speed. If your foot is not firmly pressing the brake pedal, the vehicle could accelerate quickly forward or in reverse. You could lose control of the vehicle and hit someone or something. Only shift into gear when the engine is idling normally and your foot is firmly pressing the brake pedal.**

(Continued)

WARNING! *(Continued)*

- **Unintended movement of a vehicle could injure those in or near the vehicle. As with all vehicles, you should never exit a vehicle while the engine is running. Before exiting a vehicle, always come to a complete stop, then apply the parking brake, shift the transmission into PARK, and turn the ignition OFF. When the ignition is in the OFF mode, the transmission is locked in PARK, securing the vehicle against unwanted movement.**
- **When exiting the vehicle, always make sure the ignition is in the OFF mode, remove the key fob from the vehicle, and lock the vehicle.**
- **Never leave children alone in a vehicle, or with access to an unlocked vehicle. Allowing children to be in a vehicle unattended is dangerous for a number of reasons. A child or others could be seriously or fatally injured. Children should be warned not to touch the parking brake, brake pedal or the transmission gear selector.**
- **Do not leave the key fob in or near the vehicle (or in a location accessible to children), and do not leave the ignition in the ACC or ON/RUN mode. A child could operate power windows, other controls, or move the vehicle.**

CAUTION!

- **DO NOT race the engine when shifting from PARK or NEUTRAL into another gear range, as this can damage the drivetrain.**
- **Before moving the transmission gear selector out of PARK, you must start the engine, and also press the brake pedal. Otherwise, damage to the gear selector could result.**

The following indicators should be used to ensure that you have properly engaged the transmission into the PARK position:

- Look at the transmission gear position display and verify that it indicates the PARK position (P), and is not blinking.
- With brake pedal released, verify that the gear selector will not move out of PARK.

REVERSE (R)

This range is for moving the vehicle backward. Shift into REVERSE only after the vehicle has come to a complete stop.

NEUTRAL (N)

Use this range when the vehicle is standing for prolonged periods with the engine running. Apply the parking brake and shift the transmission into PARK if you must exit the vehicle.

WARNING!
Do not coast in NEUTRAL and never turn off the ignition to coast down a hill. These are unsafe practices that limit your response to changing traffic or road conditions. You might lose control of the vehicle and have a collision.

CAUTION!
Towing the vehicle, coasting, or driving for any other reason with the transmission in NEUTRAL can cause severe transmission damage. Refer to "Recreational Towing" in "Starting And Operating" and "Towing A Disabled Vehicle" in "In Case Of Emergency" for further information.

DRIVE (D)

This range should be used for most city and highway driving. It provides the smoothest upshifts and downshifts, and the best fuel economy. The transmission automatically upshifts through all forward gears. The DRIVE position provides optimum driving characteristics under all normal operating conditions.

When frequent transmission shifting occurs (such as when operating the vehicle under heavy loading conditions, in hilly terrain, traveling into strong head winds, or while towing a heavy trailer), select TOW/HAUL mode or use the Electronic Range Select (ERS) shift control (refer to "Electronic Range Select (ERS) Operation" in this section for further information) to select a lower gear range. Under these conditions, using a lower gear range will improve performance and extend transmission life by reducing excessive shifting and heat buildup.

During extremely cold temperatures (-22°F [-30°C] or below), transmission operation may be modified depending on engine and transmission temperature as well as vehicle speed. Normal operation will resume once the transmission temperature has risen to a suitable level.

Transmission Limp Home Mode

Transmission function is monitored electronically for abnormal conditions. If a condition is detected that could result in transmission damage, Transmission Limp Home Mode is activated. In this mode, the transmission may operate only in certain gears, or may not shift at all. Vehicle performance may be severely degraded and the engine may stall. In some situations, the transmission may not re-engage if the engine is turned off and restarted. The Malfunction Indicator Light (MIL) may be illuminated. A message in the instrument cluster will inform the driver of the more serious conditions, and indicate what actions may be necessary.

In the event of a momentary problem, the transmission can be reset to regain all forward gears by performing the following steps:

NOTE:
In cases where the instrument cluster message indicates the transmission may not re-engage after engine shutdown, perform this procedure only in a desired location (preferably, at an authorized dealer).

1. Stop the vehicle.
2. Shift the transmission into PARK, if possible. If not, shift the transmission to NEUTRAL.
3. Push and hold the ignition switch until the engine turns OFF.
4. Wait approximately 30 seconds.
5. Restart the engine.
6. Shift into the desired gear range. If the problem is no longer detected, the transmission will return to normal operation.

NOTE:
Even if the transmission can be reset, we recommend that you visit an authorized dealer at your earliest possible convenience. An authorized dealer has diagnostic equipment to assess the condition of your transmission.

If the transmission cannot be reset, authorized dealer service is required.

Electronic Range Select (ERS) Operation — Eight-Speed Transmission

The Electronic Range Select (ERS) shift control allows the driver to limit the highest available gear when the transmission is in DRIVE. For example, if you set the transmission gear limit to 4 (fourth gear), the transmission will not shift above fourth gear (except to prevent engine overspeed), but will shift through the lower gears normally.

You can switch between DRIVE and ERS mode at any vehicle speed. When the transmission gear selector is in DRIVE, the transmission will operate automatically, shifting between all available gears. Tapping the GEAR- switch (on the steering wheel) will activate ERS mode, display the current gear in the instrument cluster, and set that gear as the top available gear. Once in ERS mode, tapping the GEAR- or GEAR+ switch will change the top available gear.

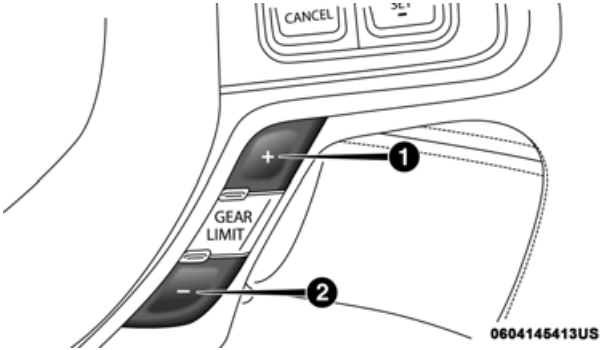

1 — GEAR + Switch 2 — GEAR – Switch

To exit ERS mode, simply push and hold the GEAR+ switch until the gear limit display disappears from the instrument cluster.

WARNING!
Do not downshift for additional engine braking on a slippery surface. The drive wheels could lose their grip and the vehicle could skid, causing a collision or personal injury.

When to Use TOW/HAUL Mode

When driving in hilly areas, towing a trailer, carrying a heavy load, etc., and frequent transmission shifting occurs, push the TOW/HAUL switch to activate TOW/HAUL mode. This will improve performance and reduce the potential for transmission overheating or failure due to excessive shifting.

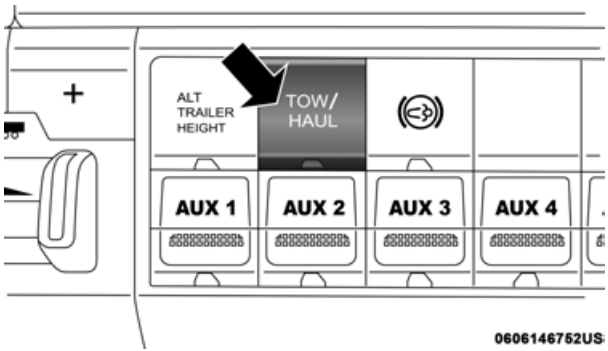

TOW/HAUL Switch

The "TOW/HAUL Indicator Light" will illuminate in the instrument cluster to indicate that TOW/HAUL mode has been activated. Pushing the switch a second time restores normal operation. Normal operation is always the default at engine start-up. If TOW/HAUL mode is desired, the switch must be pushed each time the engine is started.

WARNING!
Do not use the "TOW/HAUL" feature when driving in icy or slippery conditions. The increased engine braking can cause the rear wheels to slide, and the vehicle to swing around with the possible loss of vehicle control, which may cause an accident possibly resulting in personal injury or death.

ACTIVE NOISE CANCELLATION

Your vehicle is equipped with an Active Noise Cancellation System. This system is designed to address exhaust and engine noise. The system relies on four microphones embedded in the headliner, which monitor exhaust and engine noise, and assists an onboard frequency generator, which creates counteracting sound waves in the audio system's speakers. This helps keep the vehicle quiet at idle and during drive.

FOUR-WHEEL DRIVE OPERATION — IF EQUIPPED

Four-wheel drive trucks are equipped with either a manually shifted transfer case or an electronically shifted transfer case. Refer to the operating instructions for your transfer case, located in this section for further information.

Four-Position Electronically Shifted Transfer Case — If Equipped

This is an electronic shift transfer case and is operated by the 4WD Control Switch (Transfer Case Switch), which is located on the instrument panel.

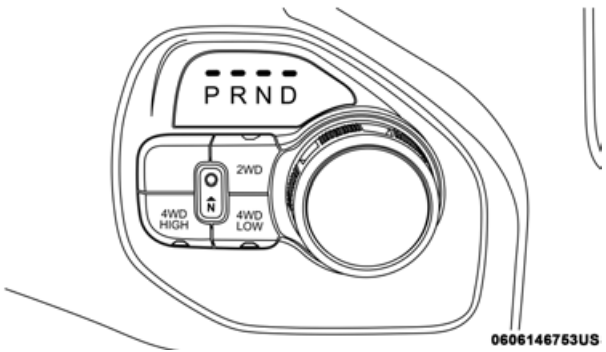

Four-Position Transfer Case

This electronically shifted transfer case provides four mode positions:

- Two-Wheel Drive High Range (2WD)
- Four-Wheel Drive High Range (4WD HIGH)
- Four-Wheel Drive Low Range (4WD LOW)
- Neutral (NEUTRAL)

For additional information on the appropriate use of each transfer case mode position, see the information below:

2WD

Rear-Wheel Drive High Range — This range is for normal street and highway driving on dry hard surfaced roads.

4WD HIGH

Four-Wheel Drive High Range — This range provides torque to the front driveshaft (engages four-wheel drive) which allows front and rear wheels to spin at the same speed. This provides additional traction for loose, slippery road surfaces only.

4WD LOW

Four-Wheel Drive Low Range — This range provides low speed four-wheel drive. It maximizes torque (increased torque over 4WD HIGH) to the front driveshaft; allowing front and rear wheels to rotate at the same speed. This range provides additional traction and maximum pulling power for loose, slippery road surfaces only. Do not exceed 25 mph (40 km/h) in this range.

NEUTRAL (N)

Neutral — This range disengages both the front and rear driveshafts from the powertrain. To be used for flat towing behind another vehicle. Refer to "Recreational Towing" in this section for further information.

WARNING!

- **You or others could be injured or killed if you leave the vehicle unattended with the transfer case in the NEUTRAL (N) position without first fully engaging the parking brake. The transfer case NEUTRAL (N) position disengages both the front and rear drive shaft from the powertrain, and will allow the vehicle to roll, even if the transmission is in PARK. The parking brake should always be applied when the driver is not in the vehicle.**

(Continued)

WARNING! *(Continued)*

- **The transmission may not engage PARK if the vehicle is moving. Always bring the vehicle to a complete stop before shifting to PARK, and verify that the transmission gear position indicator solidly indicates PARK (P) without blinking. Ensure that the vehicle is completely stopped, and the PARK position is properly indicated, before exiting the vehicle.**

This electronically shifted transfer case is designed to be driven in the two–wheel drive position (2WD) for normal street and highway conditions on dry hard surfaced roads). Driving the vehicle in 2WD will have greater fuel economy benefits as the front axle is not engaged in 2WD.

When additional traction is required, the transfer case 4WD HIGH and 4WD LOW positions can be used to maximize torque to the front driveshaft, forcing the front and rear wheels to rotate at the same speed. This is accomplished by pushing the desired position on the 4WD control switch.

Refer to "Shifting Procedure" in this section for specific shifting instructions.

The 4WD HIGH and 4WD LOW positions are designed for loose, slippery road surfaces only. Driving in the 4WD HIGH and 4WD LOW positions on dry hard surfaced roads may cause increased tire wear and damage to the driveline components.

NOTE:
The transfer case NEUTRAL button is located in the center of the 4WD Control Switch and is pushed by using a ballpoint pen or similar object. The transfer case NEUTRAL position is to be used for recreational towing only. Refer to "Recreational Towing" in "Starting And Operating" for further information.

Transfer Case Position Indicator Lights

The Transfer Case Position Indicator Lights (4WD and 4LOW) are located in the instrument cluster and indicate the current and desired transfer case selection. When you select a different transfer case position, the indicator lights will do the following:

If All Of The Following Shift Conditions Are Met:

1. The current position indicator light will turn OFF.
2. The selected position indicator light will flash until the transfer case completes the shift.
3. When the shift is complete, the indicator light for the selected position will stop flashing and remain ON.

If One Or More Of The Following Shift Conditions Are Not Met:

1. The indicator light for the current position will remain ON.
2. The newly selected position indicator light will continue to flash.
3. The transfer case **will not** shift.

NOTE:
Before retrying a selection, make certain that all the necessary requirements for selecting a new transfer case position have been met. To retry the selection, push the current position, wait five seconds, and retry selection. To find the shift requirements, refer to the "Shifting Procedure" for your transfer case, located in this section.

The "SVC 4WD Warning Light" monitors the electronic shift four-wheel drive system. If this light remains on after engine start up or illuminates during driving, it means that the four-wheel drive system is not functioning properly and that service is required.

WARNING!
Always engage the parking brake when powering down the vehicle if the "SVC 4WD Warning Light" is illuminated. Not engaging the parking brake may allow the vehicle to roll which may cause personal injury or death.

NOTE:
Do not attempt to make a shift while only the front or rear wheels are spinning. This could cause damage to driveline components.

When operating your vehicle in 4WD LOW, the engine speed is approximately three times that of the 2WD or 4WD HIGH positions at a given road speed. Take care not to overspeed the engine and do not exceed 25 mph (40 km/h).

Proper operation of four-wheel drive vehicles depends on tires of equal size, type and circumference on each wheel. Any difference in tire size can cause damage to the drivetrain.

Because four-wheel drive provides improved traction, there is a tendency to exceed safe turning and stopping speeds. Do not go faster than road conditions permit.

Shifting Procedure

NOTE:

- If any of the requirements to select a new transfer case position have not been met, the transfer case will not shift. The position indicator light for the previous position will remain ON and the newly selected position indicator light will continue to flash until all the requirements for the selected position have been met.
- If all the requirements to select a new transfer case position have been met, the current position indicator light will turn OFF, the selected position indicator light will flash until the transfer case completes the shift. When the shift is complete, the position indicator light for the selected position will stop flashing and remain ON.

2WD To 4WD HIGH

Push the desired position on the 4WD control switch to shift the transfercase. Shifts between 2WD and 4WD HIGH can be done with the vehicle stopped or in motion. With the vehicle in motion, the transfer case will engage/disengage faster if you momentarily release the accelerator pedal after turning the control switch. If the vehicle is stopped, the ignition switch must be in the ON position with the engine either running or off. This shift cannot be completed if the ignition switch is in the ACC position.

NOTE:
The four-wheel drive system will not allow shifts between 2WD/4WD HIGH if the front and/or rear wheels are spinning (no traction). In this situation, the selected position indicator light will flash and the original position indicator light will remain ON. At this time, reduce speed and stop spinning the wheels to complete the shift.

2WD Or 4WD HIGH To 4WD LOW

NOTE:
When shifting into or out of 4WD LOW some gear noise may be heard. This noise is normal and is not detrimental to the vehicle or occupants.

Shifting can be performed with the vehicle rolling 2 to 3 mph (3 to 5 km/h) or completely stopped. You can use either of the following procedures:

Preferred Procedure

1. With the engine running, slow the vehicle to 2 to 3 mph (3 to 5 km/h).
2. Shift the transmission into NEUTRAL.
3. While still rolling, push the desired position on the transfer case control switch.
4. After the desired position indicator light is ON (not flashing), shift the transmission back into gear.

Alternate Procedure

1. Bring the vehicle to a complete stop.
2. With the ignition switch in the ON position and the engine running, shift the transmission into NEUTRAL.
3. Push the desired position on the transfer case control switch.
4. After the desired position indicator light is ON (not flashing), shift the transmission back into gear.

NOTE:

- If Steps 1 or 2 of either the Preferred or Alternate Procedure are not satisfied prior to attempting the shift, then the desired position indicator light will flash continuously while the original position indicator light is ON, until all requirements have been met.
- The ignition switch must be in the ON position for a shift to take place and for the position indicator lights to be operable. If the ignition switch is not in the ON position, the shift will not take place and no position indicator lights will be on or flashing.

Manually Shifted Transfer Case — If Equipped

The transfer case provides four mode positions:

- Two-Wheel Drive High Range (2H)
- Four-Wheel Drive Lock High Range (4H)
- Neutral (N)
- Four-Wheel Drive Low Range (4L)

For additional information on the appropriate use of each transfer case mode position, see the information below:

2H

Two-Wheel Drive High Range — This range is for normal street and highway driving on dry, hard surfaced roads.

4H

Four-Wheel Drive Lock High Range — This range locks the front and rear driveshafts together forcing the front and rear wheels to rotate at the same speed. Additional traction for loose, slippery road surfaces only.

NEUTRAL (N)

Neutral — This range disengages both the front and rear driveshafts from the powertrain. To be used for flat towing behind another vehicle. Refer to "Recreational Towing" in "Starting And Operating" for further information.

4L

Four-Wheel Drive Low Range — This range locks the front and rear driveshafts together forcing the front and rear wheels to rotate at the same speed. Additional traction and maximum pulling power for loose, slippery road surfaces only. Do not exceed 25 mph (40 km/h).

This transfer case is intended to be driven in the 2H position for normal street and highway conditions such as dry, hard surfaced roads.

When additional traction is required, the 4H and 4L positions can be used to lock the front and rear driveshafts together and force the front and rear wheels to rotate at the same speed. This is accomplished by simply moving the gear selector to the desired positions once the appropriate speed and gear requirements are met, refer to "Shifting Procedure – Manually Shifted Transfer Case" in this section for further information.

The 4H and 4L positions are intended for loose, slippery road surfaces only. Driving in the 4H and 4L positions on dry, hard surfaced roads may cause increased tire wear and damage to the driveline components.

The "Transfer Case Position Indicator Light" in the instrument cluster will alert the driver that the vehicle is in four-wheel drive and that the front and rear driveshafts are locked together. This light will illuminate when the transfer case is shifted into either the 4H or 4L position. There is no light for the 2H or NEUTRAL positions on some models.

When operating your vehicle in 4L, the engine speed is approximately three times that of the 2H or 4H positions at a given road speed. Take care not to overspeed the engine and do not exceed 25 mph (40 km/h).

Proper operation of four-wheel drive vehicles depends on tires of equal size, type and circumference on each wheel. Any difference will adversely affect shifting and can cause damage to the drivetrain.

NOTE:
Do not attempt to make a shift while only the front or rear wheels are spinning, as this can cause damage to driveline components.

Because four-wheel drive provides improved traction, there is a tendency to exceed safe turning and stopping speeds. Do not go faster than road conditions permit.

NOTE:
Delayed shifts out of four-wheel drive may be experienced due to uneven tire wear, low or uneven tire pressures, excessive vehicle loading, or cold temperatures.

WARNING!
You or others could be injured or killed if you leave the vehicle unattended with the transfer case in the NEUTRAL position without first fully engaging the parking brake. The transfer case NEUTRAL position disengages both the front and rear drive shafts from the powertrain and will allow the vehicle to roll, even if the transmission is in PARK. The parking brake should always be applied when the driver is not in the vehicle.

Two-Wheel Drive High Range (2H)

Rear-Wheel Drive High Range — This range is for normal street and highway driving on dry hard surfaced roads.

Four-Wheel Drive High Range (4H)

Four-Wheel Drive High Range — This range locks the front and rear driveshafts together forcing the front and rear wheels to rotate at the same speed. Additional traction for loose, slippery road surfaces only.

Neutral (N)

Neutral — This range disengages the front and rear driveshafts from the powertrain. To be used for flat towing behind another vehicle. Refer to "Recreational Towing" in "Starting And Operating" for further information.

Four-Wheel Drive Low Range (4L)

Four-Wheel Drive Low Range — This range locks the front and rear driveshafts together forcing the front and rear wheels to rotate at the same speed. Additional traction and maximum pulling power for loose, slippery road surfaces only. Do not exceed 25 mph (40 km/h).

CAUTION!
Do not use 4L (Low) range when operating the vehicle on dry pavement. Driveline hardware damage can result.

Shifting Procedure — Manually Shifted Transfer Case

2H To 4H

Shifting between 2H and 4H can be made with the vehicle stopped or in motion. If the vehicle is in motion, shifts can be made up to 55 mph (88 km/h). With the vehicle in motion, the transfer case will engage/disengage faster if you momentarily release the accelerator pedal after completing the shift. Apply a constant force when shifting the transfer case lever.

2H Or 4H To 4L

NOTE:
When shifting into or out of 4L some gear noise may be heard. This noise is normal and is not detrimental to the vehicle or occupants.

With the vehicle rolling at 2 to 3 mph (3 to 5 km/h), shift the transmission into NEUTRAL. While the vehicle is coasting at 2 to 3 mph (3 to 5 km/h), shift the transfer case lever firmly to the desired position. Do not pause in transfer case NEUTRAL.

NOTE:

- Pausing in transfer case NEUTRAL in vehicles equipped with an automatic transmission may require shutting the engine OFF to avoid gear clash while completing the shift. If difficulty occurs, shift the transmission into NEUTRAL, hold your foot on the brake, and turn the engine OFF. Complete the range shift to the desired mode.
- Shifting into or out of 4L is possible with the vehicle completely stopped, however difficulty may occur due to the mating clutch teeth not being properly aligned. Several attempts may be required for clutch teeth alignment and

shift completion to occur. The preferred method is with the vehicle rolling 2 to 3 mph (3 to 5 km/h). Avoid attempting to engage or disengage 4L with the vehicle moving faster than 2 to 3 mph (3 to 5 km/h).

- Do not attempt to shift into or out of 4L while the transmission is in gear.

Transfer Case Position Indicator Light

The "Transfer Case Position Indicator Light" in the instrument cluster is used to alert the driver that the front axle is fully engaged and all four wheels are driving.

AIR SUSPENSION SYSTEM (2500/3500 MODELS) — IF EQUIPPED

Description

This air suspension system is a rear leveling ride height system. The main purpose of this system is to maintain the truck's rear ride height level. There are two selectable heights that can be chosen based on your operating conditions.

The system requires that the ignition be in ON/RUN position or the engine running with zero vehicle speed for all user requested changes and load leveling.

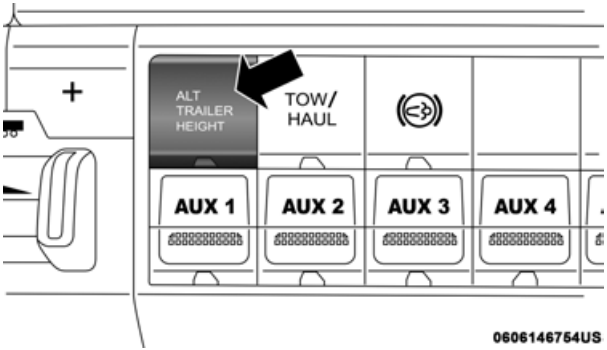

Rear Leveling Ride Height Switch

Normal Ride Height (NRH) – This is the standard position of the suspension and is meant for normal driving. It will automatically adjust to maintain the rear ride height as conditions change.

Alternate Trailer Height (ATH) – Lowers the vehicle approximately 1 in (25 mm) for a level truck, to be used as required while trailer towing. It will automatically adjust to maintain the rear ride height as conditions change.

Trailer Decoupling/Unloading - The air suspension system will load level (lower/exhaust only) once after 12 minutes after the vehicle is turned off. This allows for easy removal of a trailer and/or load from the back of the truck by maintaining the ride height. After 12 minutes you will need to turn the ignition to the run position for the air suspension to re-level due to addition/removal of load in the vehicle. If the air suspension system is disabled using the settings menu (Tire Jack Mode, Transport Mode, Alignment Mode, or Bed Lowering Mode) the system will remain disabled when the vehicle is turned off. Reactivating the air suspension can be accomplished via the settings menu or driving the vehicle above 5 mph (8 km/h) for Tire Jack Mode or Alignment Mode and 16 mph (26 km/h) for Transport Mode and Bed Lowering Mode.

NOTE:

- Most 3500 models will not lower to Alternate Trailer Height (ATH) when unloaded.
- Refer to "Trailer Towing" in "Starting And Operating" for further information.

Ignition OFF Behavior

For a predetermined amount of time after the ignition is off the air suspension may adjust to maintain a proper appearance.

WARNING!
The air suspension system uses a high pressure volume of air to operate the system. To avoid personal injury or damage to the system, see your authorized dealer for service.

Air Suspension Modes

The air suspension system has multiple modes to protect the system in unique situations:

Tire/Jack Mode

To assist with changing a tire, the air suspension system has a feature which allows the automatic leveling to be disabled. This mode is intended to be enabled with engine running. Refer to "Instrument Cluster Display" in "Getting To Know Your Instrument Panel" or "Uconnect Settings" in "Multimedia" if equipped with a touch screen radio for further information.

NOTE:
This mode is intended to be enabled with engine running.

Transport Mode

For towing your vehicle with four wheels off the road, the air suspension system has a feature which will put the vehicle below Normal Ride Height (NRH) and disable the automatic load leveling system. This mode is intended to be enabled with engine running. Refer to “Instrument Cluster Display” in “Getting To Know Your Instrument Panel” or “Uconnect Settings” in “Understanding Your Instrument Panel” if equipped with a touch screen radio for further information.

NOTE:
This mode is intended to be enabled with engine running.

Wheel Alignment Mode

Before performing a wheel alignment this mode must be enabled. Refer to “Instrument Cluster Display” in “Getting To Know Your Instrument Panel” or “Uconnect Settings” in “Multimedia” if equipped with a touch screen radio for further information.

NOTE:
This mode is intended to be enabled with engine running.

Bed Lowering Mode

For towing your vehicle with four wheels off the road, the air suspension system has a feature which will put the vehicle below Normal Ride Height (NRH) and disable the automatic load leveling system. This mode is intended to be enabled with engine running. Refer to “Instrument Cluster Display” in “Getting To Know Your Instrument Panel” or “Uconnect Settings” in “Understanding Your Instrument Panel” if equipped with a touch screen radio for further information.

Protection Strategy

In order to “protect” the air suspension system, the vehicle will disable load leveling as required (suspension overloaded, battery charge low, etc.). Load leveling will automatically resume as soon as system operation requirements are met. See your authorized dealer if system does not resume.

Instrument Cluster Display Messages

When the appropriate conditions exist, a message will appear in the instrument cluster display. Refer to "Instrument Cluster Display" in "Getting To Know Your Instrument Panel" for further information.

An audible chime will be heard whenever a system error has been detected.

See your authorized dealer for system service if normal operation does not resume.

Operation

Pushing the Alternate Trailer Height (ATH) button once while at Normal Ride Height (NRH), will lower the vehicle to Alternate Trailer Height (ATH) and will illuminate the LED.

NOTE:
The LED will continuously blink until vehicle Alternate Trailer Height (ATH) has been achieved and the LED will turn on.

Pushing the Alternate Trailer Height (ATH) again will raise the vehicle to Normal Ride Height (NRH).

NOTE:
The LED will continuously blink until Normal Ride Height (NRH) has been achieved and the LED will turn off.

- Transport Mode – No indicator lamps will be illuminated. Transport Mode is disabled by driving the vehicle, or deselecting the mode via the interface.
- Tire/Jack Mode – No indicator lamps will be illuminated. Tire/Jack Mode is disabled by driving the vehicle, or by deselecting the mode via the interface.
- Wheel Alignment Mode – No indicator lamps will be illuminated. Wheel Alignment Mode is disabled by driving the vehicle, or by deselecting the mode via the interface.
- Bed Lowering Mode – No indicator lamps will be illuminated. Bed Lowering Mode is disabled by driving the vehicle, or deselecting the mode via the interface.

AXLE LOCKER SYSTEM — POWER WAGON MODELS ONLY (IF EQUIPPED)

This vehicle is equipped with electronically locking front and rear differentials. These differentials, when engaged, mechanically lock together the axle shafts forcing the wheels to spin at an equal rate. This allows the vehicle to maintain its momentum and prevents it from becoming stuck. The locking front and rear differentials should only be engaged

during low-speed, extreme off-road situations where one wheel is likely to not be in contact with the ground. It is not recommended to drive the vehicle with the differentials locked on pavement due to the reduced ability to turn and speed limitations.

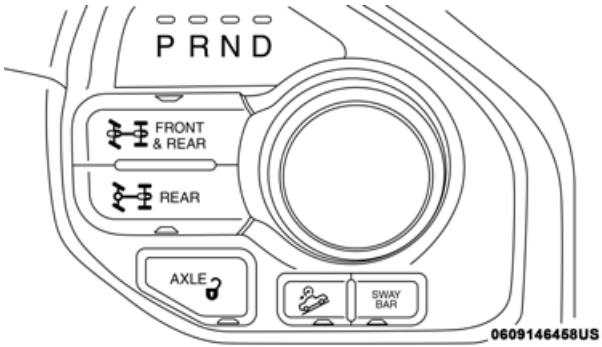

Axle Lock Selector

CAUTION!

- **Do not lock the front or rear axle on hard surfaced roads. The ability to steer the vehicle is reduced and damage to the drivetrain may occur when the axles are locked on hard surfaced roads.**

(Continued)

CAUTION! *(Continued)*

- **Do not try to lock the rear axle if the vehicle is stuck and the tires are spinning. You can damage drivetrain components. Lock the rear axle before attempting situations or navigating terrain, which could possibly cause the vehicle to become stuck.**

The locking axles are controlled by the axle locker switch.

The switch has three positions:

- AXLE UNLOCK – the front and rear axles are unlocked
- REAR LOCK – the rear axle is locked
- FRONT/REAR LOCK – the front and rear axles are locked

Under normal driving conditions, the switch should be left in the AXLE UNLOCK position.

NOTE:
Even when the axles are in the AXLE UNLOCK position, the limited slip differential in the rear axle still provides torque biasing capability for moderate low traction environments.

During the command to lock the axle, the indicator light will flash until the axle is locked. After the lock command has been successfully executed, the light will remain on solid.

To lock the rear axle, place the vehicle in 4LO. Refer to "Four Wheel Drive Operation" in "Starting And Operating" for further information. Push the REAR LOCK button while traveling less than 3 mph (5 km/h). The RR indicator light will remain on when the rear axle is locked.

NOTE:
Left to right wheel speed difference may be necessary to allow the axle to fully lock. If the indicator light is flashing after placing the switch in the REAR LOCK or FRONT/REAR LOCK position, drive the vehicle in a turn or on loose gravel to expedite the locking action.

WARNING!
Do not use the locked axle position for normal driving. A locked front axle is intended for off-road driving only. Locking the front axle during on-road driving will reduce the steering ability. This could cause a collision and you may be seriously injured.

To lock the front axle; push the FRONT/REAR LOCK button while traveling less than 3 mph (5 km/h). The indicator light will be solid when the front axle is locked.

NOTE:
The rear axle must be locked before the front axle will lock.

To unlock the front axle; push the REAR LOCK button. The FRONT/REAR LOCK indicator light will go out when the axle is unlocked.

NOTE:
The axle lockers could be torque locked due to side to side loads on the axle. Driving slowly while turning the steering wheel from a left hand turn to a right hand turn or driving in REVERSE for a short distance may be required to release the torque lock and unlock the axles.

To unlock the rear axle; push the AXLE UNLOCK button. The REAR LOCK indicator light will go out when the rear axle is unlocked.

STABILIZER/SWAY BAR SYSTEM — POWER WAGON ONLY

Your vehicle is equipped with an electronic disconnecting stabilizer/sway bar. This system allows greater front suspension travel in off-road situations.

Due to the use of taller springs, this vehicle has an increased ride height of approximately 1.9 in (48.3 mm) in the front and 1.5 in (38.1 mm) in the rear. A major advantage to increasing ride height is the positive effect it has on approach/departure and break over angles.

This system is controlled by the electronic control sway bar switch located below the instrument panel.

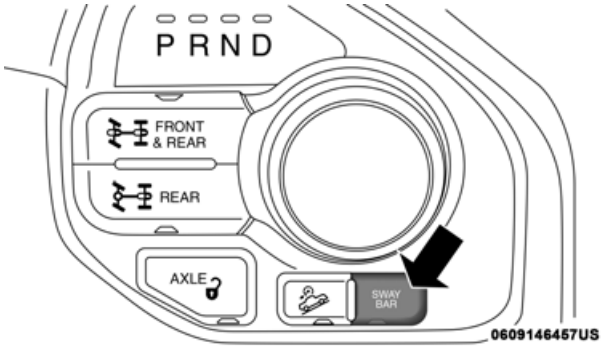

Sway Bar Disconnect Button

Push the SWAY BAR switch to activate the system. Push the switch again to deactivate the system. The "Sway Bar Indicator Light" (located in the instrument cluster) will illuminate when the bar is disconnected. The "Sway Bar Indicator Light" will flash during activation transition, or when activation conditions are not met. The stabilizer/sway bar should remain in on-road mode during normal driving conditions.

WARNING!
Do not disconnect the stabilizer bar and drive on hard surfaced roads or at speeds above 18 mph (29 km/h), you may lose control of the vehicle, which could result in serious injury or death. The front stabilizer bar enhances vehicle stability and assists in maintaining control of the vehicle. The system monitors vehicle speed and will attempt to reconnect the stabilizer bar at speeds over 18 mph (29 km/h). This is indicated by a flashing off road light and solid on road light. Once vehicle speed is reduced below 14 mph (22 km/h), the system will attempt to return to the Off-Road mode.

To disconnect the stabilizer/sway bar, shift to either 4HI or 4LO and push the SWAY BAR button to obtain the Off-Road position. Refer to "Four Wheel Drive Operation" in "Starting And Operating" for further information. The "Sway Bar Indicator Light" will flash until the stabilizer/sway bar has been fully disconnected.

NOTE:
The stabilizer/sway bar may be torque locked due to left and right suspension height differences. This condition is due to driving surface differences or vehicle loading. In order for the Stabilizer/Sway Bar to disconnect/reconnect, the right

and left halves of the bar must be aligned. This alignment may require that the vehicle be driven onto level ground or rocked from side to side.

To return to the On-Road mode; push the SWAY BAR button again.

WARNING!
If the stabilizer/sway bar will not return to On-Road mode, vehicle stability is reduced. Do not attempt to drive the vehicle over 18 mph (29 km/h). Driving faster than 18 mph (29 km/h) may cause loss of control of the vehicle, which could result in serious injury or death. Contact your local service center for assistance.

SAFE OFF-ROAD DRIVING — POWER WAGON ONLY

Off-Road Driving Tips And Vehicle Characteristics

Your vehicle has excellent on and off-road capabilities. These off-road capabilities will allow you to explore those wilderness trails where few travel, providing a source of exciting and satisfying recreation. Before you venture out, you should contact your local governmental agency to determine the designated off-road vehicle (ORV) trails or recreation areas. You should always tread lightly and only use established roads, trails or ORV recreational areas.

The National Forest Service, Bureau of Land Management, or local Department of Natural Resources are a wealth of information and usually have maps with marked trails.

Skid Plates And Underbody Protection

Steel skid plates protect the major driveline components of the truck including the fuel tank, transfer case and steering damper. In addition, this vehicle is equipped with boxed cross members and fore/aft rails. This additional protection allows the vehicle to be utilized in severe off-road situations that would be considered impassable by a normal truck.

Ramp Travel Index (RTI)

The ramp travel index is the distance, in inches, that you can drive your vehicle with one wheel on a 20-degree ramp without lifting any other wheel off the ground. This distance up the ramp divided by the wheelbase of the vehicle and multiplied by 1,000 is the RTI. This vehicle has an RTI of 510, which means you can articulate one front wheel 26 inches (66 cm) in the air while the other three wheels remain in contact with the ground.

Water Fording Characteristics

Water fording characteristic is the vehicle's ability to cross a body of still water, where the powertrain and drivetrain are safe from water ingestion. This vehicle has high water fording characteristics with the ability to cross a pool of water, without stopping, 24 inches (60 cm) deep at a maximum speed of 10 mph (16 km/h) and a pool of water 30 inches (76 cm) deep at a maximum speed of 5 mph (8 km/h), both with an entrance ramp angle of 1.3 degrees.

CAUTION!
The door sill height is 25 inches (63.5 cm). Water may intrude into the interior of the vehicle at greater depths.

Simultaneous Brake And Throttle Operation

Many off-road driving conditions require the simultaneous use of the brake and throttle (two footed driving). When climbing rocks, logs, or other stepped objects, using light brake pressure with light throttle will keep the vehicle from jerking or lurching. This technique is also used when you need to stop and restart a vehicle on a steep incline.

The Basics Of Off-Road Driving

You will encounter many types of terrain driving off-road. You should be familiar with the terrain and area before proceeding. There are many types of surface conditions: hard packed dirt, gravel, rocks, grass, sand, mud, snow and ice. Every surface has a different effect on your vehicle's steering, handling and traction. Controlling your vehicle is one of the keys to successful off-road driving, so always keep a firm grip on the steering wheel and maintain a good driving posture. Avoid sudden accelerations, turns or braking. In most cases there are no road signs, posted speed limits or signal lights. Therefore you will need to use your own good judgment on what is safe and what isn't. When on a trail you should always be looking ahead for surface obstacles and changes in terrain. The key is to plan your future driving route while remembering what you are currently driving over.

WARNING!
Always wear your seat belt and firmly tie down cargo. Unsecured cargo can become projectiles in an off-road situation.

CAUTION!
Never park your vehicle over dry grass or other combustible materials. The heat from your vehicle exhaust system could cause a fire.

When To Use Low Range

When driving off-road, shift into 4LO (Low Range) for additional traction or to improve handling and control on slippery or difficult terrain. Due to the lower gearing, low range will allow the engine to operate in a higher power range. This will allow you to idle over obstacles and down hills, with improved control and less effort. Also, use 4LO (Low Range) in rain, ice, snow, mud, sand, to get heavy loads rolling, improve traction, or whenever 4HI (High Range) traction will not do the job.

Driving In Snow, Mud And Sand

There is a drastic reduction in traction when driving in snow, mud or sand. The vehicle will be less responsive to steering, acceleration and braking inputs. Therefore you should accelerate slowly, leave greater stopping distances and avoid abrupt vehicle maneuvers. You want to keep a slow constant steady pace. The key is to maintain the vehicle's momentum.

- **Snow** – In heavy snow or for additional control and traction at slower speeds, shift the transmission to a low gear and shift the transfer case to 4LO (Low Range) if necessary. Do not shift to a lower gear than necessary to maintain headway. Over-revving the engine can spin the wheels and traction will be lost. If you start to slow to a stop, try turning your steering wheel no more than a ¼ turn quickly back and forth, while still applying throttle. This will allow the tires to get a fresh "bite" and help maintain your momentum.

CAUTION!
On icy or slippery roads, do not downshift at high engine RPMs or vehicle speeds because engine braking may cause skidding and loss of control.

- **Mud** – Deep mud creates a great deal of suction around the tires and is very difficult to get through. You should use 4LO (Low Range) with a gear low enough to maintain your momentum without shifting. If you start to slow to a stop, try turning your steering wheel no more than a ¼ turn quickly back and forth for additional traction. Mud holes pose an increased threat of vehicle damage and getting stuck. They are normally full of debris from previous vehicles getting stuck. As a good practice before

entering any mud hole, get out and determine how deep it is, if there are any hidden obstacles and if the vehicle can be safely recovered if stuck.

- **Sand** – Soft sand is very difficult to travel through with full tire pressure. When crossing soft sandy spots in a trail maintain your vehicle's momentum and do not stop. The key to driving in soft sand using the appropriate tire pressure, accelerating slowly, avoiding abrupt maneuvers and maintaining the vehicle's momentum. If you are going to be driving on large soft sandy areas or dunes, reduce your tire pressure to a minimum of 15 psi (103 kPa) to allow for a greater tire surface area. Reduced tire pressure will drastically improve your traction and handling, while driving on the soft sand, but you must return the tires to normal air pressure before driving on pavement or other hard surfaces. Be sure you have a way to air the tires back up prior to reducing the pressure.

CAUTION!
Reduced tire pressures may cause tire unseating and total loss of air pressure. To reduce the risk of tire unseating, while at a reduced tire pressure, reduce your speed and avoid sharp turns or abrupt maneuvers.

Crossing Obstacles (Rocks And Other High Points)

While driving off road, you will encounter many types of terrain. These varying types of terrain bring different types of obstacles. Before proceeding review the path ahead to determine the correct approach and your ability to safely recover the vehicle if something goes wrong. Keeping a firm grip on the steering wheel, bring the vehicle to a complete stop and then inch the vehicle forward until it makes contact with the object. Apply the throttle lightly while holding a light brake pressure and ease the vehicle up and over the object.

WARNING!
Crossing obstacles can cause abrupt steering system loading which could cause you to loose control of your vehicle.

Using A Spotter

There are many times where it is hard to see the obstacle or determine the correct path. Determining the correct path can be extremely difficult when you are confronting many obstacles. In these cases have someone guide you over, through, or around the obstacle. Have the person stand a safe distance in front of you where they can see the obstacle, watch your tires and undercarriage, and guide you through.

Crossing Large Rocks

When approaching large rocks, choose a path which ensures you drive over the largest with your tires. This will lift your undercarriage over the obstacle. The tread of the tire is tougher and thicker than the side wall and is designed to take the abuse. Always look ahead and make every effort to cross the large rocks with your tires.

CAUTION!
• **Never attempt to straddle a rock that is large enough to strike your axles or undercarriage.** • **Never attempt to drive over a rock which is large enough to contact the door sills.**

Crossing A Ravine, Gully, Ditch, Washout Or Rut

When crossing a ravine, gully, ditch, washout or a large rut, the angled approach is the key to maintaining your vehicle's mobility. Approach these obstacles at a 45-degree angle and let each tire go through the obstacle independently. You need to use caution when crossing large obstacles with steep sides. Do not attempt to cross any large obstacle with steep sides at an angle great enough to put the vehicle at risk of a rollover. If you get caught in a rut, dig a small trench to the right or left at a 45-degree angle ahead of the front tires. Use the removed dirt to fill the rut ahead of the turnout you just created. You should now be able to drive out following the trench you just created at a 45-degree angle.

WARNING!
There is an increased risk of rollover when crossing an obstacle, at any angle, with steep sides.

Crossing Logs

To cross a log, approach it at a slight angle (approximately 10 to 15 degrees). This allows one front tire to be on top of the log while the other just starts to climb the log. While climbing the log, modulate your brake and accelerator to avoid spinning the log out from under your tires. Then ease the vehicle off the log using your brakes.

CAUTION!
Do not attempt to cross a log with a greater diameter than the running ground clearance or the vehicle will become high centered.

Getting High Centered

If you get hung up or high centered on an object, get out of the vehicle and try to determine what the vehicle is hung up on, where it is contacting the underbody and what is the best direction to recover the vehicle. Depending on what you are in contact with, jack the vehicle up and place a few rocks under the tires so the weight is off of the high point when you let the vehicle down. You can also try rocking the vehicle or winching the vehicle off the object.

CAUTION!
Winching or rocking the vehicle off hard objects increases the risk of underbody damage.

Hill Climbing

Hill climbing requires good judgment and a good understanding of your abilities and your vehicle's limitations. Hills can cause serious problems. Some are just too steep to climb and should not be attempted. You should always feel confident with the vehicle and your abilities. You should always climb hills straight up and down. Never attempt to climb a hill on an angle.

- **Before Climbing A Steep Hill** – As you approach a hill consider its grade or steepness. Determine if it is too steep. Look to see what the traction is on the hill side trail. Is the trail straight up and down? What is on top and the other side? Are there ruts, rocks, branches or other obstacles on the path? Can you safely recover the vehicle if something goes wrong? If everything looks good and you feel confident, then change transmission into a lower gear, shift the transfer case into 4LO (Low) and proceed with caution. You should use first gear and 4LO (Low Range) for very steep hills.
- **Driving Up Hill** – Once you have determined your ability to proceed and have shifted into the appropriate gear, line your vehicle up for the straightest possible run. Accelerate with an easy constant throttle and apply more power as you start up the hill. Do not race forward into a steep grade, the abrupt change of grade could cause you to lose control. If the front end begins to bounce, ease off the throttle slightly to bring all four tires back on the ground. As you approach the crest of the hill ease off the throttle and slowly proceed over the top. If the wheels start to slip as you approach the crest of a hill, ease off the accelerator and maintain headway by turning the steering wheel no more than a ¼ turn quickly back and forth. This will provide a fresh "bite" into the surface and will usually

provide enough traction to complete the climb. If you do not make it to the top, place the vehicle in REVERSE and back straight down the grade using engine resistance along with the vehicle brakes.

WARNING!
Never attempt to climb a hill at an angle or turn around on a steep grade. Driving across an incline increases the risk of a roll over, which may result in severe injury or death.

- **Driving Down Hill** – Before driving down a steep hill you need to determine if it is too steep for a safe descent. What is the surface traction? Is the grade too steep to maintain a slow controlled descent? Are there obstacles? Is it a straight descent? Is there plenty of distance at the base of the hill to regain control if the vehicle descends too fast? If you feel confident in your ability to proceed then make sure you are in 4LO (Low Range) with the transmission in first gear (manually select first gear on automatic transmissions) and proceed with caution. Allow engine braking to control the descent and apply your brakes if necessary, but do not allow the tires to lock.

WARNING!
Do not descend a steep grade in NEUTRAL. Use vehicle brakes in conjunction with engine braking. Descending a grade too fast could cause you to lose control and be seriously injured or killed.

- **Driving Across An Incline** – If at all possible avoid driving across an incline. If it is necessary, know your vehicle's abilities. Driving across an incline places more weight on the down hill wheels, which increases the possibilities of a down hill slide or rollover. Make sure the surface has good traction with firm and stable soils. If possible transverse the incline at an angle heading slightly up or down.

WARNING!
Driving across an incline increases the risk of a rollover, which may result in severe injury.

- **If You Stall Or Begin To Lose Headway** – If you stall or begin to lose headway while climbing a steep hill, allow your vehicle to come to a stop and immediately apply the brake. Restart the engine and shift into REVERSE. Back slowly down the hill allowing the compression braking of the engine and transmission to help regulate your speed. If

the brakes are required to control vehicle speed, apply them lightly and avoid locking or skidding the tires.

WARNING!
If the engine stalls or you lose headway or cannot make it to the top of a steep hill or grade, never attempt to turn around. To do so may result in tipping and rolling the vehicle, which may result in severe injury. Always back carefully straight down a hill in REVERSE. Never back down a hill in NEUTRAL using only the vehicle brakes. Never drive diagonally across a hill, always drive straight up or down.

Driving Through Water

Extreme care should be taken crossing any type of water. Water crossings should be avoided if possible and only be attempted when necessary, in a safe responsible manner. You should only drive through areas which are designated and approved. You should tread lightly and avoid damage to the environment. You should know your vehicle's abilities and be able to recover it if something goes wrong. You should never stop or shut a vehicle off when crossing deep water unless you ingested water into the engine air intake. If the engine stalls do not attempt to restart it. Determine if it has ingested water first. The key to any crossing is low and slow. You want to use first gear in 4L (Low Range) and proceed very slowly with a constant slow speed (3-5 mph [5–8 km/h] maximum) and light throttle. Keep the vehicle moving; do not try to accelerate through the crossing. After crossing any water higher than the bottom of the axle differentials, you should inspect all of the vehicle fluids for signs of water ingestion.

CAUTION!
Water ingestion into the axles, transmission, transfer case, engine or vehicle interior can occur if you drive too fast or through too deep of water. Water can cause permanent damage to engine, driveline or other vehicle components and your brakes will be less effective once wet and/or muddy.

- **Before You Cross Any Type Of Water** – As you approach any type of water you need to determine if you can cross it safely and responsibly. If necessary, get out and walk through the water or probe it with a stick. You need to be sure of its depth, approach angle, current and bottom condition. Be careful of murky or muddy waters, check for hidden obstacles. Make sure you will not be intruding on any wildlife and you can recover the vehicle if necessary. The key to a safe crossing is the water depth, current and bottom conditions. On soft bottoms the vehicle will sink in,

effectively increasing the water level on the vehicle. Be sure to consider this when determining the depth and the ability to safely cross.

- **Crossing Puddles, Pools, Flooded Areas Or Other Standing Water** – Puddles, pools, flooded or other standing water areas normally contain murky or muddy waters. These water types normally contain hidden obstacles and make it difficult to determine an accurate water depth, approach angle, and bottom condition. Murky or muddy water holes are where you want to hook up tow straps prior to entering. This makes for a faster, cleaner and easier vehicle recovery. If you are able to determine you can safely cross, than proceed using the low and slow method.

CAUTION!
Muddy waters can reduce the cooling system effectiveness by depositing debris onto the radiator.

- **Crossing Ditches, Streams, Shallow Rivers Or Other Flowing Water** – Flowing water can be extremely dangerous. Never attempt to cross a fast running stream or river even in shallow water. Fast moving water can easily push your vehicle downstream sweeping it out of control. Even in very shallow water, a high current can still wash the dirt out from around your tires putting you and your vehicle in jeopardy. There is still a high risk of personal injury and vehicle damage with slower water currents in depths greater than the vehicle's running ground clearance. You should never attempt to cross flowing water which is deeper than the vehicle's running ground clearance. Even the slowest current can push the heaviest vehicle downstream out of control if the water is deep enough to push on the large surface area of the vehicle's body. Before you proceed determine the speed of the current, the water's depth, approach angle, bottom condition and if there are any obstacles, then cross at an angle heading slightly upstream using the low and slow technique.

WARNING!
Never drive through fast moving deep water. It can push your vehicle downstream, sweeping it out of control. This could put you and your passengers at risk of injury or drowning.

Airing Down For Off-Road Driving

Running lower tire pressure off-road can improve your ride comfort and vehicle traction. Reducing the tire air pressure allows the tire to bulge slightly, improving its surface area for better flotation and ability to mold or form to the ground contour. Different terrain, tires, and vehicles require different tire pressure. Hard surfaces like rock and heavier vehicles require higher pressures than softer surfaces such as

sand and lighter vehicles. You will need to experiment to determine what is right for your situation. It is easier and faster to let air out than it is to replace it so, start high and lower it as required. Remember you must return the tires to normal air pressure before driving on road or at highway conditions. Be sure you have a way to return the tires to their normal on road air pressure.

CAUTION!
Reduced tire pressure increases the risk of tire damage and may cause tire unseating with total loss of air pressure. To reduce the risk of tire unseating, while at a reduced tire pressure, drive at slower speeds and avoid sharp turns or abrupt maneuvers.

Vehicle Recovery

If you drive off-road, you may encounter a situation where you will need to recover your vehicle. Vehicle recovery should always be given consideration before attempting a questionable obstacle. You should never go off-road driving without the ability to recover your vehicle from a situation. Having another vehicle with you usually works best for most situations. The first thing to do is assess the situation. Why are you stuck? Are you hung up on something? Would it be easier to go forward or to go backward? Can you still move the vehicle? Is there an anchor point to winch to? Are you alone or do you have another vehicle to help? Is there high risk of vehicle damage during the recovery process? Answering these questions will help you determine the best method of recovery. If you can still move the vehicle slightly and the only issue is slick ground, then rock cycling your vehicle would be the first choice. If you have ample room, an additional vehicle and there is low risk of vehicle impingement on the surroundings, then using a tow strap to the vehicle tow hooks would be fast and easy. If the vehicle is severely hung up or in a situation where great care needs to be taken during the recovery, then nothing can do the job better than a winch. If you are severely hung up on something you should jack the vehicle up and stack something under the wheels to allow the vehicle to roll off the object without causing further damage. This should be tried before attempting any recovery method.

CAUTION!
Pulling the vehicle off an obstacle, without first clearing the object, may result in additional underbody damage.

- **Rock Cycling Your Vehicle** – Rock cycling your vehicle is one of the easiest, fastest and most commonly used methods. This simply involves shifting your vehicle from DRIVE to REVERSE, while applying throttle after each shift. During this process, for additional traction, try turning your steering wheel quickly left and right no more than a ¼ turn. If you are stuck in mud, sand, or snow try spinning your tires during this process to clean the debris from the tread and improve the traction. You want to create a rocking motion with the vehicle. This helps build vehicle momentum, which hopefully gets you out. Remember to ease off and on the accelerator before and after the shift. If after a few rock cycles your vehicle is not free, stop and try another method of recovery. Continuous rock cycling will only cause unnecessary damage to your vehicle and the environment.

CAUTION!
Damage can occur when spinning your tires at an excessive high speed. Do not spin your tires faster than an indicated 30 mph (48 km/h).

- **Using The Tow Hooks With A Tow Strap** – Tow straps are a quick and easy way to recover your vehicle from minor situations if you have a secondary vehicle which is not stuck. The tow hooks on your vehicle are designed to take the abusive force generated during vehicle recovery. Do not use the bumper or any other vehicle component as an attachment point. Using tow straps requires coordination between the two drivers. Good communication and line of sight are required for a safe recovery. First connect the tow strap to the correct attachment points on both vehicles. There should be a least 20 to 30 feet (6 to 9 meters) between the vehicles to allow for a safe recovery. If necessary join two tow straps together using a 1 ½ inch hard wood dowel. This will keep the straps from becoming knotted and is safer than using a clevis pin if the strap breaks. Next have the tow vehicle backup, leaving two to three feet worth of slack in the strap. Then the tow vehicle, using light throttle, should accelerate tightening the strap providing the pulling force needed to free the vehicle. The vehicle being recovered should assist in the recovery, at the time of the snap, by slowly spinning the tires in the same direction as the pulling vehicle. After the vehicle becomes free, the driver of the previously stuck vehicle should signal they are free and should hit their brakes stopping both vehicles. The driver of the pulling vehicle should let off the throttle without using the brakes, once signaled by the other driver. This sequence is important to avoid having the recovered vehicle hit the pulling vehicle.

WARNING!

Never use tow straps with end hooks or link two straps with a clevis pin. These heavy metal objects could become projectiles if a strap breaks, which could cause severe injury. Never leave more than 2 to 3 feet (.6 to 1 meter) of slack in the strap. More slack than this greatly increases the risk of injury and vehicle damage. Always keep everyone at least 30 feet (9 meters) away from a strapping or winching situation.

- **Winching (Refer To "Winch Operation" For Additional Information)** – Winching is most commonly used in the following situations: there is no support vehicle available, a high controlled force is required to recover the vehicle, there is a high risk of environmental or vehicle damage, or where nothing else seems to work. A winch can deliver a high pulling force with a great deal of control. It allows you to walk the vehicle out of the situation in a slow controlled manner. This control works well for avoiding further vehicle damage. Once you decide it is time to use the winch look for a good anchor point. It needs to be strong enough to hold more than the vehicle's weight and provide a direction of pull as straight as possible. Use block and tackle if necessary to improve the angle of pull or increase the winch's pulling force. If the anchor point is a tree use a strap around its base and hook the cable to the strap. If it is another vehicle, then place that vehicle in PARK and block the front tires. If you cannot find an anchor point within reach try using your spare tire by burying it. Once you have determined an anchor point hook up the cable, ensuring there are a least five wraps of cable left on the drum, and place a floor mat or something else over the strung out cable. Placing something over the strung out cable helps keep the cable on the ground if it breaks. Next, place the vehicle in first gear and apply a very light throttle as you power the winch in. Be careful not to allow slack in the cable as you recover the vehicle. Do not try to guide the cable into the drum. If it starts to bunch up on one end, let it. You can re-spool the cable afterwards. Never use a winch cable as a tow strap and always stand back while winching.

WARNING!

Winch cables are under high tension when in use and can become a projectile if they fail. Never stand over or straddle the winch cable. Never jerk or overload the winch cable. Never stand in front of the vehicle while winching. Failure to follow these instructions can result in serious or fatal injury.

After Driving Off-Road

Off-road operation puts more stress on your vehicle than does most on-road driving. After going off-road, it is always a good idea to check for damage. That way you can get any problems taken care of right away and have your vehicle ready when you need it.

- Completely inspect the underbody of your vehicle. Check tires, body structure, steering, suspension, and exhaust system for damage.
- Inspect the radiator for mud and debris and clean as required.
- Check threaded fasteners for looseness, particularly on the chassis, drivetrain components, steering, and suspension. Retighten them, if required, and torque to the values specified in the Service Manual.
- Check for accumulations of plants or brush. These things could be a fire hazard. They might hide damage to fuel lines, brake hoses, axle pinion seals, and propeller shafts.
- After extended operation in mud, sand, water, or similar dirty conditions, have the radiator, fan, brake rotors, wheels, brake linings, and axle yokes inspected and cleaned as soon as possible.

WARNING!
Abrasive material in any part of the brakes may cause excessive wear or unpredictable braking. You might not have full braking power when you need it to prevent a collision. If you have been operating your vehicle in dirty conditions, get your brakes checked and cleaned as necessary.

- If you experience unusual vibration after driving in mud, slush or similar conditions, check the wheels for impacted material. Impacted material can cause a wheel imbalance and freeing the wheels of it will correct the situation.

LIMITED-SLIP DIFFERENTIAL

The limited-slip differential provides additional traction on snow, ice, mud, sand and gravel, particularly when there is a difference between the traction characteristics of the surface under the right and left rear wheels. During normal driving and cornering, the limited-slip unit performs similarly to a conventional differential. On slippery surfaces, however, the differential delivers more of the driving effort to the rear wheel having the better traction.

The limited-slip differential is especially helpful during slippery driving conditions. With both rear wheels on a slippery surface, a slight application of the accelerator will supply maximum traction. When starting with only one rear wheel on an excessively slippery surface, slight momentary application of the parking brake may be necessary to gain maximum traction.

WARNING!
On vehicles equipped with a limited-slip differential never run the engine with one rear wheel off the ground since the vehicle may drive through the rear wheel remaining on the ground. You could lose control of the vehicle.

Care should be taken to avoid sudden accelerations when both rear wheels are on a slippery surface. This could cause both rear wheels to spin, and allow the vehicle to slide sideways on the crowned surface of a road or in a turn.

WINCH USAGE — POWER WAGON ONLY (IF EQUIPPED)

Things To Know Before Using Your Winch

General Winch Information

Your vehicle is equipped with an electric vehicle recovery winch. This winch uses the electrical power from the vehicle charging system to power a motor that winds the winch rope onto the winch drum via planetary gear reduction. By nature, a winch is capable of generating very high forces and should be used with care. Do not operate the winch without reading and understanding the complete winch owner's manual.

Tensioning The Winch Rope

The winch rope must be properly tensioned before use. Follow the instructions below to tension the rope:

1. Un-spool the rope leaving five wraps of rope on the winch drum.
2. Attach the hook to a suitable anchor point.

CAUTION!
Be certain the anchor will withstand the load required to tension the winch rope.

3. Apply at least 1,000 lbs (454 kg) of tension to the rope while winding the rope. Always use care to ensure the rope does not pile up on one side of the drum and is neatly wound onto the drum.

CAUTION!
The winch rope must spool on the winch drum in the direction indicated on the drum rotation decal on the winch.

Low Voltage Interrupt

Your winch is equipped with a device that will interrupt winch function if the vehicle charging system voltage drops to a low level. The winch will not power-in or out for 30 seconds if this device is tripped. If the interrupt is tripped, the vehicle should be operated at high idle for a few minutes to allow the vehicle charging system to recover before continuing to winch.

Understanding The Features Of Your Winch

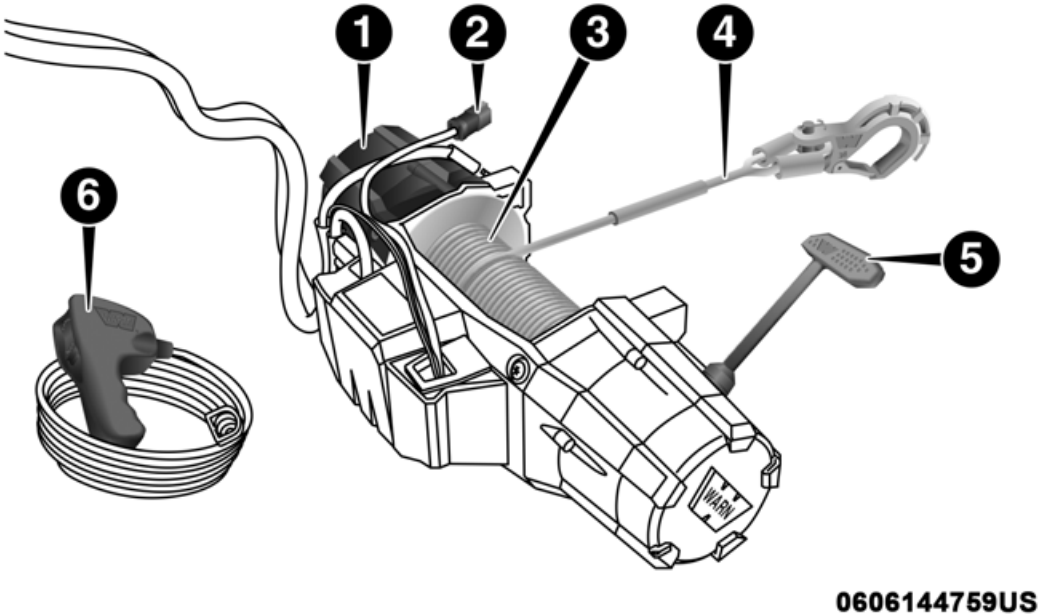

Winch Components

1. **Motor:** The winch motor is powered by the vehicle charging system.
2. **Remote Socket:** The remote socket (which will be located on the bumper assembly) allows the remote control to be attached to the control pack to allow the winch to function.
3. **Winch Drum With Integral Brake:** The winch drum allows the rope to be stored on the winch and transmits force to the rope. The winch is equipped with an integral brake that will stop rotation of the winch drum if the winch motor is stopped.
4. **Synthetic Rope:** The synthetic rope allows the winch to be connected to an anchor to provide a pulling force. This synthetic rope is highly flexible, lightweight, and it floats.
5. **Clutch Lever:** The clutch lever allows the winch drum to be disconnected from the winch motor to allow the rope to be pulled from the winch by hand.
6. **Remote Control:** The remote control provides the interface between the winch operator and the winch. The remote control provides the ability to power the winch in, out, and stop the winch. To operate the winch, the toggle switch is pressed down to power the winch in and up to power the winch out. The winch will stop if the switch is left in the neutral (center) position.

CAUTION!
If not installed, the hook strap must be placed on the hook.

Fairlead: The hawse fairlead acts as a guide for the synthetic rope and minimizes damage to the rope.

Winch Accessories

The following accessories are necessary to attach the winch to anchors, change direction of pull, and for safe winching.

Gloves: It is extremely important to wear protective gloves while operating the winch or handling the winch rope. Avoid loose fitting clothes or anything that could become entangled in the rope and other moving parts.

Snatch/Block Pulley: Used properly, the multi-purpose snatch block allows you to (1) increase the winch's pulling power; and (2) change your pulling direction without damaging the winch rope. Proper use of the snatch block is covered in "Before You Pull."

Clevis/D-Shackles: The D-Shackle is a safe means of connecting the looped ends of cables, straps and snatch blocks. The shackle's pin is threaded to allow easy removal.

Tree Trunk Protector: Typically made of tough, high-quality nylon, it provides the operator an attachment point for the winch rope to a wide variety of anchor points and objects, as well as protect living trees.

Abrasion Sleeve: The abrasion sleeve is provided with the synthetic rope and must be used with the synthetic rope at all times to protect the rope from potential abrasion wear. The sleeve has a loose fit so it can easily be positioned along the synthetic rope to protect from rough surfaces and sharp corners.

Operating Your Winch

WARNING!

Failure to observe any of these warnings regarding proper winch usage may result in severe injury.

- **Always use supplied hook strap to hold the hook when spooling wire rope in or out.**
- **Never use as a hoist.**
- **Never use to move persons.**
- **Never exceed winch or synthetic rope rated capacity.**
- **Always wear heavy leather gloves when handling the synthetic rope.**
- **Never touch synthetic rope or hook while in tension or under load.**

(Continued)

WARNING! *(Continued)*

- **Never engage or disengage clutch if winch is under load, synthetic rope is in tension, or rope drum is moving.**
- **Always stand clear of synthetic rope and load and keep others away during winching.**
- **Always keep hands and clothing clear of the synthetic rope, hook and fairlead opening during operation and when spooling.**
- **Never wrap synthetic rope back onto itself. Always use a choker chain, wire choker rope or tree trunk protector on the anchor.**
- **Never attach a recovery strap to the winch hook to increase the length of a pull.**
- **Never attempt to tow a vehicle with the recovery strap attached directly to the winch hook.**
- **Never use bungee or kinetic straps that develop tremendous and potentially dangerous amounts of force when stretched.**
- **Always disconnect the remote control when not in use.**
- **Never winch when there are less than 10 wraps of synthetic rope around the winch drum.**

(Continued)

WARNING! *(Continued)*

- **Always pass remote control through a window to avoid pinching lead in door, when using remote inside a vehicle.**
- **Never leave the remote control plugged into the winch while free spooling, rigging or sitting idle.**

General Information

Practice using your winch before you get stuck. Some key points to remember when using your winch are:

- Always take your time to assess the situation and plan your pull carefully.
- Always take your time when using a winch.
- Use the right equipment for the situation.
- Always wear leather gloves and do not allow the synthetic rope to slip through your hands when handling the rope.
- Only the operator should handle the synthetic rope and remote control.
- Think safety at all times.

Vehicle Recovery Using The Winch

CAUTION!

- **Always know your winch: Take the time to fully read and understand the included Installation and Operations Guide, and Basic Guide to Winching Techniques, in order to understand your winch and the winching operation.**
- **Always inspect winch installation and synthetic rope condition before operating the winch. Frayed, kinked or damaged rope must be replaced immediately. Loose or damaged winch installation must be corrected immediately.**
- **Always be sure any element which can interfere with safe winching operations is removed prior to initiating winching.**
- **Always keep remote control lead clear of the drum, synthetic rope and rigging.**
- **Inspect for cracks, pinches, frayed rope, or loose connections. Replace if damaged.**
- **Be careful not to pull the winch rope collar through the rollers. Watch and listen to winch for proper snugness.**

(Continued)

CAUTION! *(Continued)*

- **Never power hook through fairlead. Could cause damage.**

1. Inspect the winch, winch mount, and synthetic rope for damage. Do not use the winch if the mount is loose or rope shows excessive wear, frays, or damage.

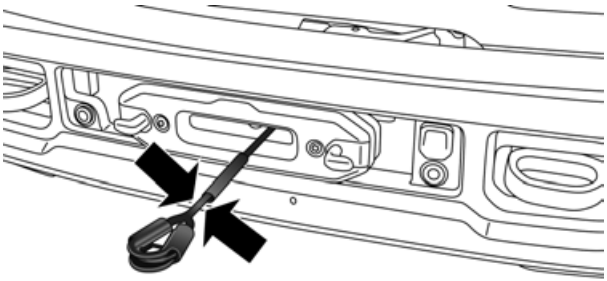

Winch Rope

2. Put on gloves.

3. Disengage the clutch to allow free spooling of the winch drum, rotate the clutch lever on the winch to disengage. Freespooling conserves battery power.

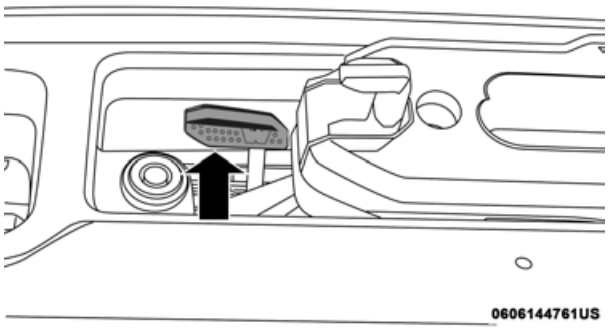

Free Spool Lever

4. Free the winch hook and attach the hook strap. Free the winch hook from its anchor point. Attach the hook strap to the hook (if not attached).

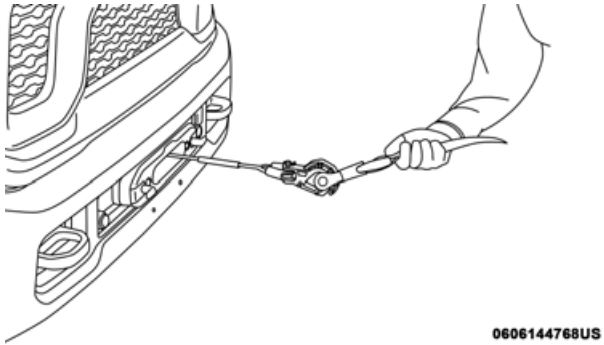

Hook Strap

WARNING!
• **Never touch winch rope or hook while someone else is at the control switch or during winching operation.** • **Never touch winch rope or hook while under tension or under load.**

5. Pull the wire to the anchor point. Pull out enough wire rope to reach your anchor point. To prevent losing the end, hold the hook strap while you work.

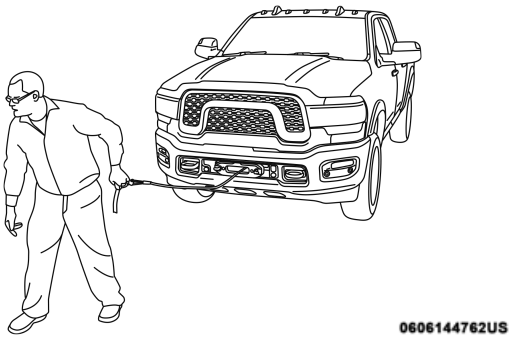

Pulling Synthetic Rope

6. Secure to the anchor point. Once you have established your anchor point, secure the tree-trunk protector or choker-chain around the object.

Tree Trunk Protector

CAUTION!
Always be certain the anchor you select will withstand the load.

NOTE:
How to choose an anchor point: A secure anchor is critical to winching operations. An anchor must be strong enough to hold while winching. Natural anchors include trees, stumps and rocks. Hook the cable as low as possible. If no natural anchors are available when recovering another vehicle, your vehicle becomes the anchor point. In this case, be sure to put the transmission in NEUTRAL, apply the hand brake and block its wheels to prevent your vehicle from moving. Ideally, you'll want an anchor point that will enable you to pull straight in the direction the vehicle will move. This allows the synthetic rope to wind tightly and evenly onto the spooling drum. An anchor point as far away as possible will provide the winch with its greatest pulling power.

7. Attach the Clevis/D-shackle and Tree Trunk Protector. Attach the shackle to the two ends of the strap or chain and through the hook, being careful not to over tighten (tighten and back-off 1/2 turn).

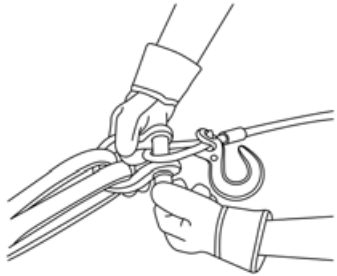

Clevis/D-Shackles

8. Lock the clutch. Lock the winch drum by rotating the clutch lever on the winch to engage.

NOTE:
Always ensure the clutch is fully engaged or disengaged.

9. Connect the remote control to the winch control box, located on the front bumper. Be careful not to let the remote control cord dangle in front of the winch. If you choose to control the winch from inside your vehicle, always pass the remote through a window to avoid pinching the cord in the door. Always disconnect the remote control when not in use.

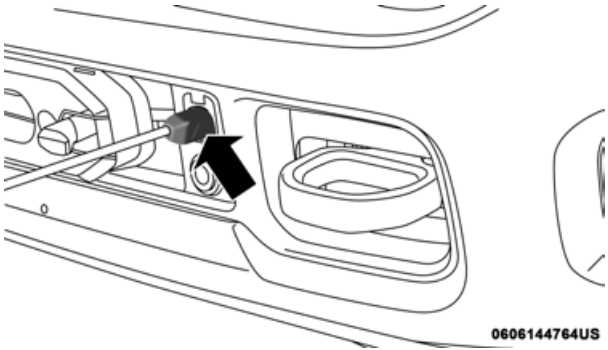

Winch Box Remote Control Connector

10. Put synthetic rope under tension. Using the remote control switch, slowly wind the rope until no slack remains. Once the rope is under tension, stand well clear of it and never step over it.

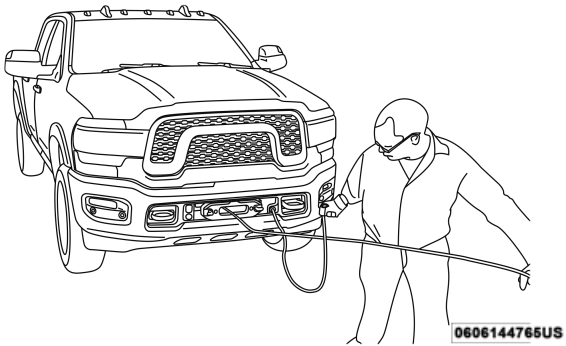

Pulling Synthetic Rope Under Tension

11. Check your anchor. Make sure all connections are secured and free of debris before continuing with the winching procedure.

12. Check synthetic rope. The rope should be neatly wound around the spooling drum. Improper winding can cause damage to the synthetic rope.

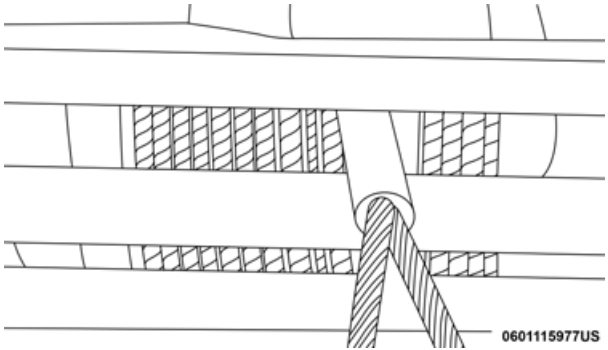

Synthetic Rope Neatly Wound Around The Spooling Drum

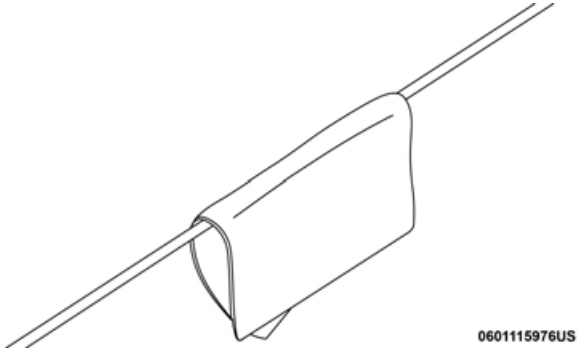

Heavy Blanket Over Rope

In certain situations you may decide to throw a heavy blanket or similar object over the rope. A heavy blanket can absorb energy should the synthetic rope break. Place it on the rope midway between the winch and the anchor point. Do this before the rope is put under tension. Do not approach or move the blanket once tension is applied. Do not allow it to get pulled into the fairlead. If it is necessary to move or remove the blanket, slack the tension on the rope first.

13. **Establish "no people" zones:** Make your intentions clear. Be sure that everyone in the immediate vicinity surrounding the winching operation is completely aware of your intentions before you pull. **Declare where the spectators should not stand - never behind or in front of the vehicle and never near the synthetic rope or snatch block. Your situation may have other "no people" zones.**

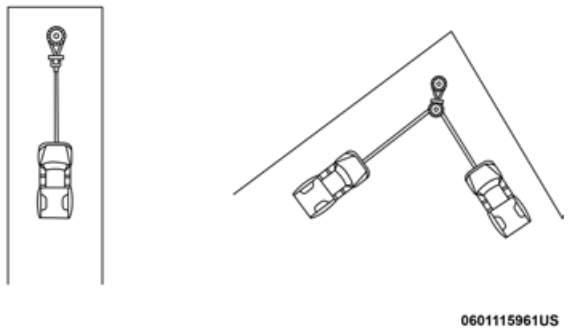

No People Zones

14. Begin winching. With the winching vehicles engine on and light tension already on the synthetic rope, begin winching slowly and steadily. Be sure that the rope is winding evenly and tightly around the spooling drum. For additional assistance, the winched vehicle can be slowly driven while being pulled by the winch. Continue pulling until the vehicle is on stable ground. If you are able to drive the vehicle, the winching operation is complete.

Using The Remote Control

NOTE:

- Avoid overheating the winch motor. For extended winching, stop at reasonable intervals to allow the winch motor to cool down.
- What to look for under load: The synthetic rope must always spool onto the drum as indicated by the drum rotation decal on the winch. As you power-in, make sure the synthetic rope winds evenly and tightly on the drum. This prevents the outer rope wraps from drawing into the inner wraps, binding and damaging the synthetic rope. Avoid shock loads by using the control switch intermittently to take up rope slack. Shock loads can momentarily far exceed the winch and synthetic rope ratings. During side pulls the synthetic rope tends to stack up at one end of the drum. This stack can become large enough to cause serious damage to the winch. So, line up pulls as straight ahead as possible and stop winching if the synthetic rope comes close to the tie rods or mounting plate. To fix an uneven stack, spool out that section of the rope and reposition it to the opposite end of the drum, which will free up space for continued winching.

15. Secure vehicle. Once recovery of the vehicle is complete, be sure to secure the vehicle's brakes and shift the transmission to PARK. Release tension in the synthetic rope.

16. Disconnect the synthetic rope, and disconnect from the anchor.

17. Rewind the synthetic rope. The person handling the synthetic rope should walk the rope in and not let it slide through the hand, control the winch at all times.

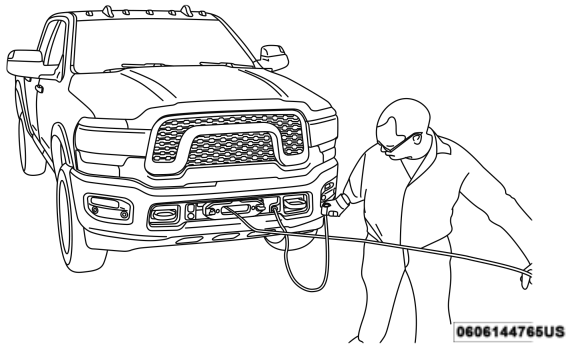

Rewinding The Synthetic Rope

WARNING!
To prevent serious injury, NEVER put your fingers inside the hook area as you are powering-in.

NOTE:
How to spool under no load: Arrange the remote control lead so it cannot be caught in the winch. Arrange the synthetic rope so it will not kink or tangle when spooled. Be sure any synthetic rope already on the spooling drum is wound tightly and evenly layered. Tighten and straighten the layer if necessary. Keep the synthetic rope under light tension and spool the rope back and onto the winch drum in even layers. Stop frequently to tighten and straighten the layers as necessary. Repeat this process until the winch hook is the same distance as the full length of the remote control from the winch. Pinch the hook between your thumb and forefinger and attach the hook strap. Hold the hook strap between the thumb and forefinger to keep tension on the synthetic rope. Walk the synthetic rope towards the fairlead, carefully spooling in the remaining rope. By pulsing the remote control switch.

18. Store the hook on the most outboard loop of the hawse fairlead.

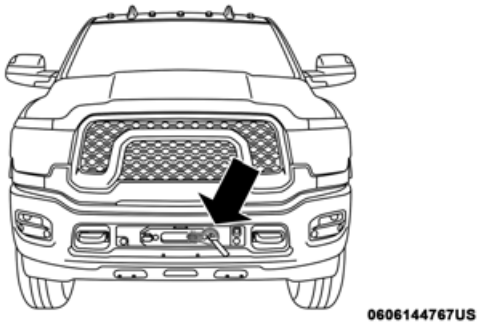

Hook In Stored Position

19. Disconnect the remote control. Disconnect the remote control cord from the control box and store in a clean and dry place. Winching operations are now complete. Put the cap on the solenoid plug-in.

NOTE:
Always store the remote control in a protected, clean, dry area.

Rigging Techniques

Various winching situations will require application of other winching techniques. These could range from too little distance to achieve maximum pull using straight line rigging, simply increasing pulling power, or maintaining a straight-line pulling situation. You will have to assess what technique is correct for your situation. Think "safety" at all times.

How To Change The Pulling Direction

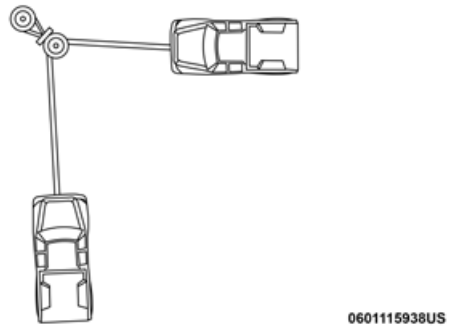

Change Pulling Directions

All winching operations should have a straight line from the winch to the object being pulled. This minimizes the synthetic rope collecting on one side of the drum affecting pulling efficiency and damaging synthetic rope. A snatch block, secured to a point directly in front of the vehicle will enable you to change your pulling direction while still allowing the synthetic rope to be at 90° to wind properly onto the spooling drum.

Increasing Pulling Power

In some cases, you may find yourself needing more pulling power. The use of snatch blocks increases mechanical advantage and that increases your pulling power.

Double Line

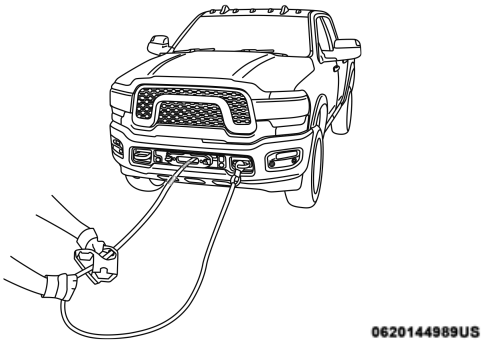

Wire Rope Routing

Because pulling power decreases with the number of layers of synthetic rope on the winch drum, you can use a snatch block to double line out more rope. This decreases the number of layers of synthetic rope on the drum, and increases pulling power. Start by feeding out enough synthetic rope to free the winch hook. Attach the hook to your vehicle's frame/tow hook and run the rope through a snatch block. Disengage the clutch and, using the snatch block, pull out enough synthetic rope to reach your anchor point. Do not attach the hook to the mounting kit. Secure to the anchor point with a tree trunk protector or choker chain. Attach the clevis/shackle. Attach the shackle to the two ends of the strap/chain, being careful not to over tighten (tighten and back-off 1/2 turn).

FUEL SAVER TECHNOLOGY — IF EQUIPPED

This feature offers improved fuel economy by shutting off four of the engine's eight cylinders during light load and cruise conditions. The system is automatic with no driver inputs or additional driving skills required.

NOTE:
This system may take some time to return to full functionality after a battery disconnect.

SPEED CONTROL

When engaged, the Speed Control takes over accelerator operations at speeds greater than 20 mph (32 km/h).

The Speed Control buttons are located on the right side of the steering wheel.

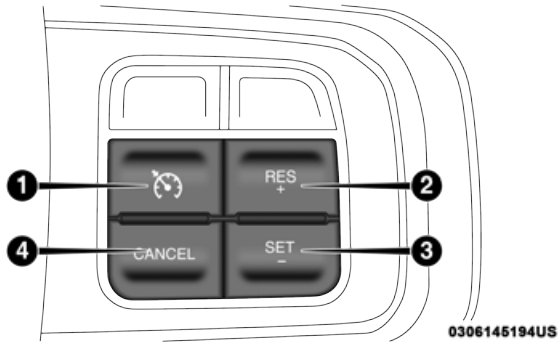

Speed Control Buttons

1 — On/Off Button	3 — SET (-)
2 — RES (+)	4 — CANCEL

NOTE:
In order to ensure proper operation, the Speed Control System has been designed to shut down if multiple speed control functions are operated at the same time. If this occurs, the Speed Control System can be reactivated by pushing the Speed Control On/Off button and resetting the desired vehicle set speed.

To Activate

Push the On/Off button to activate the Speed Control. The cruise indicator light in the instrument cluster display will illuminate. To turn the system off, push the On/Off button a second time. The cruise indicator light will turn off. The system should be turned off when not in use.

WARNING!
Leaving the Speed Control system on when not in use is dangerous. You could accidentally set the system or cause it to go faster than you want. You could lose control and have an accident. Always leave the system off when you are not using it.

To Set A Desired Speed

Turn the Speed Control on. When the vehicle has reached the desired speed, push the SET (-) button and release. Release the accelerator and the vehicle will operate at the selected speed.

NOTE:
The vehicle should be traveling at a steady speed and on level ground before pushing the SET (-) button.

To Vary The Speed Setting

To Increase Speed

When the Speed Control is set, you can increase speed by pushing the RES (+) button.

The driver's preferred units can be selected through the instrument panel settings if equipped. Refer to "Getting To Know Your Instrument Panel" for more information. The speed decrement shown is dependant on the chosen speed unit of U.S. (mph) or Metric (km/h):

U.S. Speed (mph)

- Pushing the RES (+) button once will result in a 1 mph increase in set speed. Each subsequent tap of the button results in an increase of 1 mph.
- If the button is continually pushed, the set speed will continue to increase until the button is released, then the new set speed will be established.

Metric Speed (km/h)

- Pushing the RES (+) button once will result in a 1 km/h increase in set speed. Each subsequent tap of the button results in an increase of 1 km/h.
- If the button is continually pushed, the set speed will continue to increase until the button is released, then the new set speed will be established.

To Decrease Speed

When the Speed Control is set, you can decrease speed by pushing the SET (-) button.

The driver's preferred units can be selected through the instrument panel settings if equipped. Refer to "Getting To Know Your Instrument Panel" for more information. The speed decrement shown is dependant on the chosen speed unit of U.S. (mph) or Metric (km/h):

U.S. Speed (mph)

- Pushing the SET (-) button once will result in a 1 mph decrease in set speed. Each subsequent tap of the button results in a decrease of 1 mph.
- If the button is continually pushed, the set speed will continue to decrease until the button is released, then the new set speed will be established.

Metric Speed (km/h)

- Pushing the SET (-) button once will result in a 1 km/h decrease in set speed. Each subsequent tap of the button results in a decrease of 1 km/h.
- If the button is continually pushed, the set speed will continue to decrease until the button is released, then the new set speed will be established.

To Accelerate For Passing

Press the accelerator as you would normally. When the pedal is released, the vehicle will return to the set speed.

Using Speed Control On Hills

The transmission may downshift on hills to maintain the vehicle set speed.

NOTE:
The Speed Control system maintains speed up and down hills. A slight speed change on moderate hills is normal.

On steep hills, a greater speed loss or gain may occur so it may be preferable to drive without Speed Control.

WARNING!
Speed Control can be dangerous where the system cannot maintain a constant speed. Your vehicle could go too fast for the conditions, and you could lose control and have an accident. Do not use Speed Control in heavy traffic or on roads that are winding, icy, snow-covered or slippery.

To Resume Speed

To resume a previously set speed, push the RES (+) button and release. Resume can be used at any speed above 20 mph (32 km/h).

To Deactivate

A soft tap on the brake pedal, pushing the CANCEL button, or normal brake pressure while slowing the vehicle will deactivate the Speed Control without erasing the set speed from memory.

Pushing the On/Off button, or returning the ignition to OFF, erases the set speed from memory.

ADAPTIVE CRUISE CONTROL (ACC) — IF EQUIPPED

Adaptive Cruise Control (ACC) increases the driving convenience provided by cruise control while traveling on highways and major roadways. However, it is not a safety system and not designed to prevent collisions. **Speed Control function performs differently. Please refer to the proper section within this chapter.**

ACC will allow you to keep cruise control engaged in light to moderate traffic conditions without the constant need to reset your cruise control. ACC utilizes a radar sensor and a forward facing camera designed to detect a vehicle directly ahead of you.

NOTE:

- If the sensor does not detect a vehicle ahead of you, ACC will maintain a fixed set speed.
- If the ACC sensor detects a vehicle ahead, ACC will apply limited braking or accelerate (not to exceed the original set speed) automatically to maintain a preset following distance, while matching the speed of the vehicle ahead.

The Cruise Control system has two control modes:

- Adaptive Cruise Control mode for maintaining an appropriate distance between vehicles.
- Normal (Fixed Speed) Cruise Control mode for cruising at a constant preset speed. For additional information, refer to "Normal (Fixed Speed) Cruise Control Mode" in this section.

NOTE:
Normal (Fixed Speed) Cruise Control will not react to preceding vehicles. Always be aware of the mode selected.

You can change the mode by using the Cruise Control buttons. The two control modes function differently. Always confirm which mode is selected.

WARNING!

- **Adaptive Cruise Control (ACC) is a convenience system. It is not a substitute for active driving involvement. It is always the driver's responsibility to be attentive of road, traffic, and weather conditions, vehicle speed, distance to the vehicle ahead; and, most importantly, brake operation to ensure safe operation of the vehicle under all road conditions. Your complete attention is always required while driving to maintain safe control of your vehicle. Failure to follow these warnings can result in a collision and death or serious personal injury.**
- **The ACC system:**
  - **Does not react to pedestrians, oncoming vehicles, and stationary objects (e.g., a stopped vehicle in a traffic jam or a disabled vehicle).**
  - **Cannot take street, traffic, and weather conditions into account, and may be limited upon adverse sight distance conditions.**
  - **Does not always fully recognize complex driving conditions, which can result in wrong or missing distance warnings.**

(Continued)

WARNING! *(Continued)*

- **Will bring the vehicle to a complete stop while following a target vehicle and hold the vehicle for approximately two seconds in the stop position. At this point, there will be an "ACC may cancel soon" chime and warning to the driver. When ACC is cancelled, the system will release the brakes and the driver must take over braking. The system can be resumed when the target vehicle drives off by releasing the brake and pushing the resume button on the steering wheel.**

You should switch off the ACC system:

- **When driving in fog, heavy rain, heavy snow, sleet, heavy traffic, and complex driving situations (i.e., in highway construction zones).**
- **When entering a turn lane or highway off ramp; when driving on roads that are winding, icy, snow-covered, slippery, or have steep uphill or downhill slopes.**
- **When towing a trailer up or down steep slopes.**
- **When circumstances do not allow safe driving at a constant speed.**

Adaptive Cruise Control (ACC) Operation

The speed control buttons (located on the right side of the steering wheel) operate the ACC system.

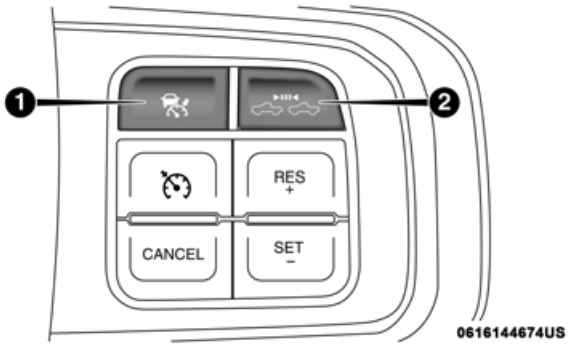

Adaptive Cruise Control Buttons

1 — Adaptive Cruise Control On/Off Button
2 — Distance Button

NOTE:
Any chassis/suspension or tire size modifications to the vehicle will effect the performance of the Adaptive Cruise Control and Forward Collision Warning System.

Activating Adaptive Cruise Control (ACC)

You can only engage ACC if the vehicle speed is above 0 mph (0 km/h).

The minimum set speed for the ACC system is 20 mph (32 km/h).

When the system is turned on and in the ready state, the instrument cluster display will read "ACC Ready."

When the system is off, the instrument cluster display will read "Adaptive Cruise Control (ACC) Off."

NOTE:
You cannot engage ACC under the following conditions:

- When in Four-Wheel Drive Low.
- When you apply the brakes.
- When the parking brake is applied.
- When the automatic transmission is in PARK, REVERSE or NEUTRAL.
- When the vehicle speed is outside of the speed range.
- When the brakes are overheated.
- When the driver door is open at low speed.
- When the driver seat belt is unbuckled at low speed.
- ESC Full-Off Mode is active.

To Activate/Deactivate

Push and release the Adaptive Cruise Control (ACC) on/off button. The ACC menu in the instrument cluster displays "ACC Ready."

Adaptive Cruise Control Ready

To turn the system off, push and release the Adaptive Cruise Control (ACC) on/off button again. At this time, the system will turn off and the instrument cluster display will show "Adaptive Cruise Control (ACC) Off."

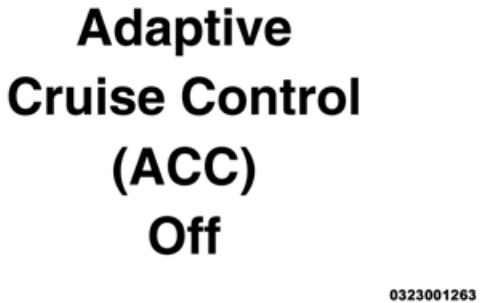

Adaptive Cruise Control Off

WARNING!
Leaving the Adaptive Cruise Control (ACC) system on when not in use is dangerous. You could accidentally set the system or cause it to go faster than you want. You could lose control and have a collision. Always leave the system off when you are not using it.

To Set A Desired ACC Speed

When the vehicle reaches the speed desired, push the SET (-) button and release. The instrument cluster display will show the set speed.

If the system is set when the vehicle speed is below 20 mph (32 km/h), the set speed shall be defaulted to 20 mph (32 km/h). If the system is set when the vehicle speed is above 20 mph (32 km/h), the set speed shall be the current speed of the vehicle.

NOTE:
ACC cannot be set if there is a stationary vehicle in front of your vehicle in close proximity.

Remove your foot from the accelerator pedal, after the ACC has been set. If you do not, the vehicle may continue to accelerate beyond the set speed. If this occurs:

- The message “ACC DRIVER OVERRIDE” will display in the instrument cluster display.
- The system will not be controlling the distance between your vehicle and the vehicle ahead. The vehicle speed will only be determined by the position of the accelerator pedal.

To Cancel

The following conditions cancel the system:

- The brake pedal is applied.
- The CANC (cancel) button is pushed.
- An Anti-Lock Brake System (ABS) event occurs.
- The gear selector is removed from the DRIVE position.
- The Electronic Stability Control/Traction Control System (ESC/TCS) activates.
- The vehicle parking brake is applied.
- Driver seatbelt is unbuckled at low speeds.
- Driver door is opened at low speeds.
- A Trailer Sway Control (TSC) event occurs.
- The driver switches ESC to full-off mode.
- The braking temperature exceeds normal range (overheated).

To Turn Off

The system will turn off and clear the set speed in memory if:

- The Adaptive Cruise Control (ACC) on/off button is pushed.
- The Normal (Fixed Speed) Cruise Control on/off button is pushed.
- The ignition is turned OFF.
- You switch to Four-Wheel Drive Low.

To Resume

If there is a set speed in memory push the RES (+) button and then remove your foot from the accelerator pedal. The instrument cluster display will display the last set speed.

NOTE:

- If your vehicle stays at standstill for longer than two seconds, the driver will have to push the RES (+) button to reengage the ACC to the existing set speed.
- ACC cannot be resumed if there is a stationary vehicle in-front of your vehicle in close proximity.

WARNING!
The Resume function should only be used if traffic and road conditions permit. Resuming a set speed that is too high or too low for prevailing traffic and road conditions could cause the vehicle to accelerate or decelerate too sharply for safe operation. Failure to follow these warnings can result in a collision and death or serious personal injury.

To Vary The Speed Setting

To Increase Speed

While ACC is set, you can increase the set speed by pushing the RES (+) button.

The speed increment shown is dependant on the chosen speed unit of U.S. (mph) or Metric (km/h):

U.S. Speed (mph)

- Pushing the RES (+) button once will result in a 1 mph increase in set speed. Each subsequent tap of the button results in an increase of 1 mph.
- If the button is continually pushed, the set speed will continue to increase in 5 mph increments until the button is released. The increase in set speed is reflected in the instrument cluster display.

Metric Speed (km/h)

- Pushing the RES (+) button once will result in a 1 km/h increase in set speed. Each subsequent tap of the button results in an increase of 1 km/h.
- If the button is continually pushed, the set speed will continue to increase in 10 km/h increments until the button is released. The increase in set speed is reflected in the instrument cluster display.

To Decrease Speed

While ACC is set, the set speed can be decreased by pushing the SET (-) button.

The speed decrement shown is dependant on the chosen speed unit of U.S. (mph) or Metric (km/h):

U.S. Speed (mph)

- Pushing the SET (-) button once will result in a 1 mph decrease in set speed. Each subsequent tap of the button results in a decrease of 1 mph.
- If the button is continually pushed, the set speed will continue to decrease in 5 mph increments until the button is released. The decrease in set speed is reflected in the instrument cluster display.

Metric Speed (km/h)

- Pushing the SET (-) button once will result in a 1 km/h decrease in set speed. Each subsequent tap of the button results in a decrease of 1 km/h.
- If the button is continually pushed, the set speed will continue to decrease in 10 km/h increments until the button is released. The decrease in set speed is reflected in the instrument cluster display.

NOTE:

- When you override and push the RES (+) button or SET (-) buttons, the new set speed will be the current speed of the vehicle.
- When you use the SET (-) button to decelerate, if the engine's braking power does not slow the vehicle sufficiently to reach the set speed, the brake system will automatically slow the vehicle.
- The ACC system decelerates the vehicle to a full stop when following a target vehicle. If an ACC host vehicle follows a target vehicle to a standstill, after two seconds the driver will either have to push the RES (+) button, or apply the accelerator pedal to reengage the ACC to the existing set speed.
- The ACC system maintains set speed when driving up hill and down hill. However, a slight speed change on moderate hills is normal. In addition, downshifting may occur while climbing uphill or descending downhill. This is normal operation and necessary to maintain set speed. When driving up hill and down hill, the ACC system will cancel if the braking temperature exceeds normal range (overheated).

Setting The Following Distance In ACC

The specified following distance for ACC can be set by varying the distance setting between four bars (longest), three bars (long), two bars (medium) and one bar (short). Using this distance setting and the vehicle speed, ACC calculates and sets the distance to the vehicle ahead. This distance setting displays in the instrument cluster display.

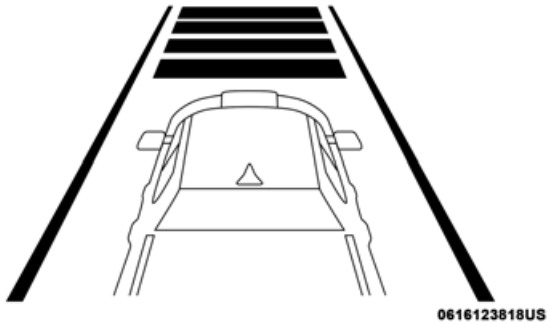

Distance Setting 4 Bars (Longest)

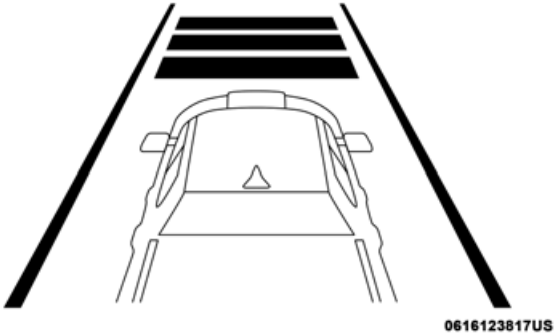

Distance Setting 3 Bars (Long)

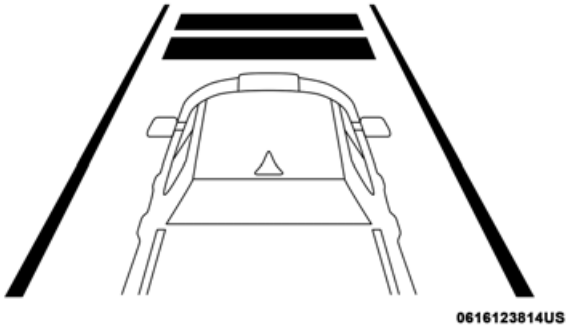

Distance Setting 2 Bars (Medium)

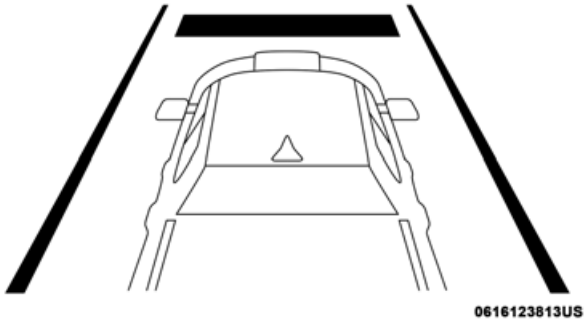

Distance Setting 1 Bar (Short)

The system automatically defaults to the longest distance setting. To decrease the distance setting, push the Distance Button and release. Each time the button is pushed, the distance setting decreases by one bar. Once the shortest setting is reached, if the button is pushed again it will reset to the default setting (longest).

If there is no vehicle ahead, the vehicle will maintain the set speed. If a slower moving vehicle is detected in the same lane, the instrument cluster displays the "Sensed Vehicle Indicator" icon, and the system adjusts vehicle speed automatically to maintain the distance setting, regardless of the set speed.

The vehicle will then maintain the set distance until:

- The vehicle ahead accelerates to a speed above the set speed.
- The vehicle ahead moves out of your lane or view of the sensor.
- The distance setting is changed.
- The system disengages. (Refer to the information on ACC Activation).

The maximum braking applied by ACC is limited; however, the driver can always apply the brakes manually, if necessary.

NOTE:
The brake lights will illuminate whenever the ACC system applies the brakes.

A Proximity Warning will alert the driver if ACC predicts that its maximum braking level is not sufficient to maintain the set distance. If this occurs, a visual alert "BRAKE" will flash in the instrument cluster display and a chime will sound while ACC continues to apply its maximum braking capacity.

Brake Alert

NOTE:
The "Brake!" Screen in the instrument cluster display is a warning for the driver to take action and does not necessarily mean that the Forward Collision Warning system is applying the brakes autonomously.

Trailer Detect — If Equipped

When a trailer is detected, the ACC system automatically defaults to the longest setting (four bars). The setting can be overridden by pushing the Distance Button on the steering wheel.

Overtake Aid

When driving with ACC engaged and following a vehicle, the system will provide an additional acceleration up to the ACC set speed to assist in passing the vehicle. This additional acceleration is triggered when the driver utilizes the left turn signal and will only be active when passing on the left hand side.

ACC Operation At Stop

In the event that the ACC system brings your vehicle to a standstill while following a target vehicle, if the target vehicle starts moving within two seconds of your vehicle coming to a standstill, your vehicle will resume motion without the need for any driver action.

If the target vehicle does not start moving within two seconds of your vehicle coming to a standstill, then ACC will cancel and the driver must take over braking. When the target vehicle drives off, ACC can be resumed by releasing the brake and pushing the RES (+) button.

NOTE:
After the ACC system holds your vehicle at a standstill for approximately two seconds, a chime will sound and an "ACC may cancel soon" warning will display. The brakes will release when ACC is cancelled and the driver must take over braking.

While ACC is holding your vehicle at a standstill, if the driver seatbelt is unbuckled or the driver door is opened, the parking brake will be activated, and the ACC system will be cancelled.

WARNING!
When the ACC system is resumed, the driver must ensure that there are no pedestrians, vehicles or objects in the path of the vehicle. Failure to follow these warnings can result in a collision and death or serious personal injury.

Adaptive Cruise Control (ACC) Menu

The instrument cluster display will show the current ACC system settings. The instrument cluster display is located in the center of the instrument cluster. The information it displays depends on ACC system status.

Push the Adaptive Cruise Control (ACC) on/off button (located on the steering wheel) until one of the following appears in the instrument cluster display:

Adaptive Cruise Control Off

When ACC is deactivated, the display will read "Adaptive Cruise Control Off."

Adaptive Cruise Control Ready

When ACC is activated, but the vehicle speed setting has not been selected, the display will read "Adaptive Cruise Control Ready."

Adaptive Cruise Control Set

When the RES (+) or the SET(-) button (located on the steering wheel) is pushed, the display will read "ACC SET."

When ACC is set, the set speed will show in the instrument cluster display.

The ACC screen may display once again if any ACC activity occurs, which may include any of the following:

- System Cancel
- Driver Override
- System Off
- ACC Proximity Warning
- ACC Unavailable Warning

  The instrument cluster display will return to the last display selected after five seconds of no ACC display activity

Display Warnings And Maintenance

"Wipe Front Radar Sensor In Front Of Vehicle" Warning

The "ACC/FCW Unavailable Wipe Front Radar Sensor" warning will display and also a chime will indicate when conditions temporarily limit system performance.

This most often occurs at times of poor visibility, such as in snow or heavy rain. The ACC system may also become temporarily blinded due to obstructions, such as mud, dirt or ice. In these cases, the instrument cluster display will display "ACC/FCW Unavailable Wipe Front Radar Sensor" and the system will deactivate.

The "ACC/FCW Unavailable Wipe Front Radar Sensor" message can sometimes be displayed while driving in highly reflective areas (i.e. tunnels with reflective tiles, or ice and snow). The ACC system will recover after the vehicle has left these areas. Under rare conditions, when the radar is not tracking any vehicles or objects in its path this warning may temporarily occur.

NOTE:
If the "ACC/FCW Unavailable Wipe Front Radar Sensor" warning is active Normal (Fixed Speed) Cruise Control is still available. For additional information refer to "Normal (Fixed Speed) Cruise Control Mode" in this section.

If weather conditions are not a factor, the driver should examine the sensor. It may require cleaning or removal of an obstruction. The sensor is located in the camera in the center of the windshield, on the forward side of the rearview mirror.

To keep the ACC System operating properly, it is important to note the following maintenance items:

- Always keep the sensor clean. Carefully clear the windshield.
- Do not remove any screws from the sensor. Doing so could cause an ACC system malfunction or failure and require a sensor realignment.
- Do not attach or install any accessories near the sensor, including transparent material or aftermarket grilles. Doing so could cause an ACC system failure or malfunction.

When the condition that deactivated the system is no longer present, the system will return to the "Adaptive Cruise Control Off" state and will resume function by simply reactivating it.

NOTE:

- If the "ACC/FCW Unavailable Wipe Front Radar Sensor" message occurs frequently (e.g. more than once on every trip) without any snow, rain, mud, or other obstruction, have the radar sensor realigned at your authorized dealer.
- Installing a snow plow, front-end protector, an aftermarket grille or modifying the grille is not recommended. Doing so may block the sensor and inhibit ACC/FCW operation.

"Clean Front Windshield" Warning

The "ACC/FCW Limited Functionality Clean Front Windshield" warning will display and also a chime will indicate when conditions temporarily limit system performance. This most often occurs at times of poor visibility, such as in snow or heavy rain and fog. The ACC system may also become temporarily blinded due to obstructions, such as mud, dirt, or ice on windshield, driving directly into the sun and fog on the inside of glass. In these cases, the instrument cluster display will show "ACC/FCW Limited Functionality Clean Front Windshield" and the system will have degraded performance.

The "ACC/FCW Limited Functionality Clean Front Windshield" message can sometimes be displayed while driving in adverse weather conditions. The ACC/FCW system will recover after the vehicle has left these areas. Under rare conditions, when the camera is not tracking any vehicles or objects in its path this warning may temporarily occur.

If weather conditions are not a factor, the driver should examine the windshield and the camera located on the back side of the inside rear view mirror. They may require cleaning or removal of an obstruction.

When the condition that created limited functionality is no longer present, the system will return to full functionality.

NOTE:
If the "ACC/FCW Limited Functionality Clean Front Windshield" message occurs frequently (e.g. more than once on every trip) without any snow, rain, mud, or other obstruction, have the windshield and forward facing camera inspected at your authorized dealer.

Service ACC/FCW Warning

If the system turns off, and the instrument cluster displays "ACC/FCW Unavailable Service Required" or "Cruise/FCW Unavailable Service Required", there may be an internal system fault or a temporary malfunction that limits ACC functionality. Although the vehicle is still drivable under normal conditions, ACC will be temporarily unavailable. If this occurs, try activating ACC again later, following an ignition cycle. If the problem persists, see your authorized dealer.

Precautions While Driving With ACC

In certain driving situations, ACC may have detection issues. In these cases, ACC may brake late or unexpectedly. The driver needs to stay alert and may need to intervene.

NOTE:

- Aftermarket add-ons such as snow plows, lift kits, and brush/grille bars can hinder module performance. Ensure the radar/camera has no obstructions in the field of view.
- Height modifications can limit module performance and functionality.

- Do not put stickers or easy passes over the camera/radar field of view.
- Any modifications to the vehicle that may obstruct the field of view of the radar/camera are not recommended.

Cleaning Instructions

Dust and dirt can accumulate on the cover and block the camera lens. Clean the camera lens with a soft microfiber cloth, being careful not to damage or scratch the module.

Towing A Trailer

ACC while towing a trailer is recommended only with an Integrated Trailer Brake Controller. Aftermarket trailer brake controllers will not activate the trailer brakes when ACC is braking.

Offset Driving

ACC may not detect a vehicle in the same lane that is offset from your direct line of travel, or a vehicle merging in from a side lane. There may not be sufficient distance to the vehicle ahead. The offset vehicle may move in and out of the line of travel, which can cause your vehicle to brake or accelerate unexpectedly.

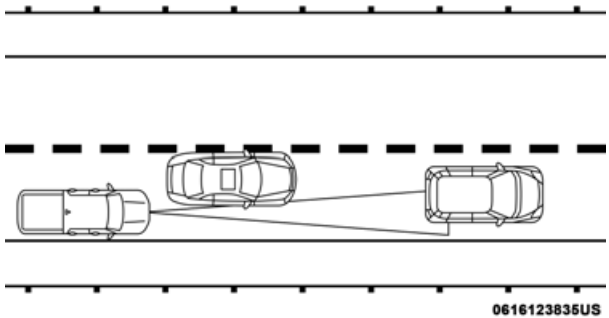

Offset Driving Condition Example

Turns And Bends

When driving on a curve with ACC engaged, the system may decrease the vehicle speed and acceleration for stability reasons, with no target vehicle detected. Once the vehicle is out of the curve the system will resume your original set speed. This is a part of normal ACC system functionality.

NOTE:
On tight turns ACC performance may be limited.

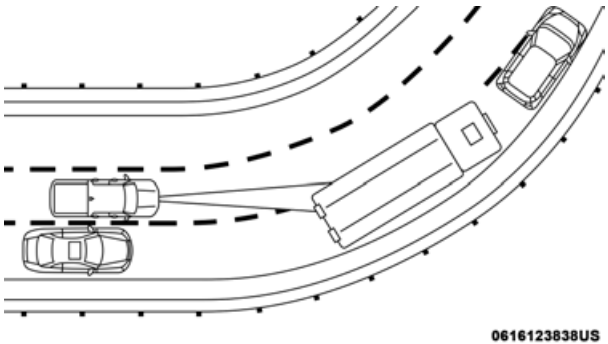

Turn Or Bend Example

Using ACC On Hills

When driving on hills, ACC may not detect a vehicle in your lane. Depending on the speed, vehicle load, traffic conditions, and the steepness of the hills, ACC performance may be limited.

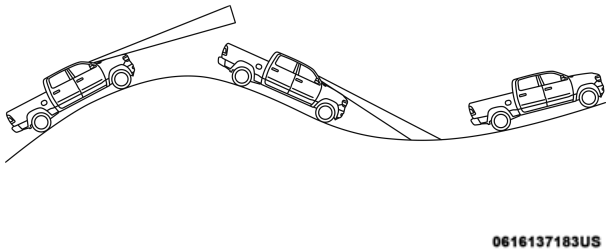

ACC Hill Example

Lane Changing

ACC may not detect a vehicle until it is completely in the lane in which you are traveling. In the illustration shown, ACC has not yet detected the vehicle changing lanes and it may not detect the vehicle until it's too late for the ACC system to take action. ACC may not detect a vehicle until it is completely in the lane. There may not be sufficient distance to the lane-changing vehicle. Always be attentive and ready to apply the brakes if necessary.

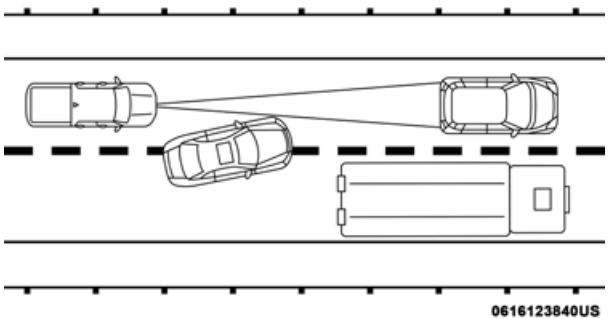

Lane Changing Example

Narrow Vehicles

Some narrow vehicles traveling near the outer edges of the lane or edging into the lane are not detected until they have moved fully into the lane. There may not be sufficient distance to the vehicle ahead.

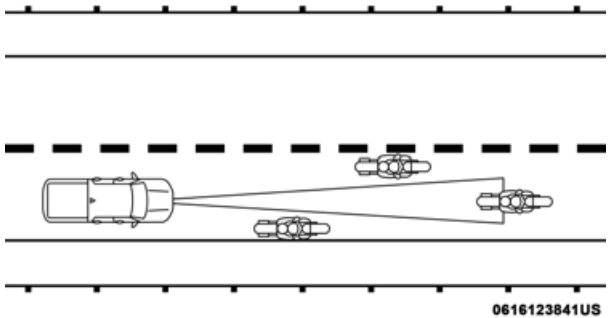

Narrow Vehicle Example

Stationary Objects And Vehicles

ACC does not react to stationary objects and stationary vehicles. For example, ACC will not react in situations where the vehicle you are following exits your lane and the vehicle ahead is stopped in your lane. Always be attentive and ready to apply the brakes if necessary.

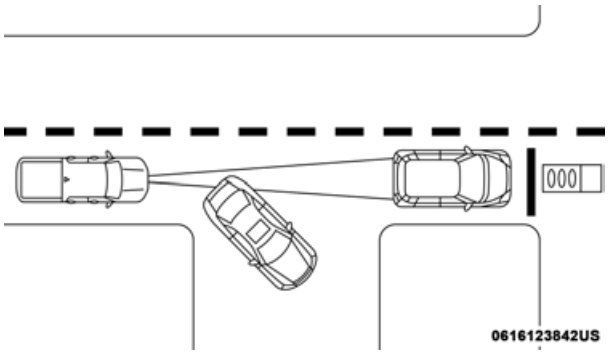

Stationary Object And Stationary Vehicle Example

General Information

The following regulatory statement applies to all Radio Frequency (RF) devices equipped in this vehicle:

This device complies with Part 15 of the FCC Rules and with Industry Canada license-exempt RSS standard(s). Operation is subject to the following two conditions:

1. This device may not cause harmful interference.
2. This device must accept any interference received, including interference that may cause undesired operation.

NOTE:
Changes or modifications not expressly approved by the party responsible for compliance could void the user's authority to operate the equipment.

Normal (Fixed Speed) Cruise Control Mode

In addition to Adaptive Cruise Control mode, a Normal (Fixed Speed) Cruise Control mode is available for cruising at fixed speeds. The Normal (Fixed Speed) Cruise Control mode is designed to maintain a set cruising speed without requiring the driver to operate the accelerator. Speed Control can only be operated if the vehicle speed is above 20 mph (32 km/h).

To change between the different control modes, push the Adaptive Cruise Control (ACC) on/off button which turns the ACC on and the Normal (Fixed Speed) Cruise Control off. Pushing of the Normal (Fixed Speed) Cruise Control on/off button will result in turning on (changing to) the Normal (Fixed Speed) Cruise Control mode.

WARNING!
In the Normal (Fixed Speed) Cruise Control mode, the system will not react to vehicles ahead. In addition, the proximity warning does not activate and no alarm will sound even if you are too close to the vehicle ahead since neither the presence of the vehicle ahead nor the vehicle-to-vehicle distance is detected. Be sure to maintain a safe distance between your vehicle and the vehicle ahead. Always be aware which mode is selected.

To Set A Desired Speed

Turn the Normal (Fixed Speed) Cruise Control on. When the vehicle has reached the desired speed, push the RES (+) or SET (-) button and release. Release the accelerator and the vehicle will operate at the selected speed. Once a speed has been set a message "CRUISE CONTROL SET TO MPH (km/h)" will appear indicating what speed was set. This light will turn on when the system is turned on via the on/off control. It turns green when the cruise control is set.

To Vary The Speed Setting

To Increase Speed

When the Normal (Fixed Speed) Cruise Control is set, you can increase speed by pushing the RES (+) button.

The driver's preferred units can be selected through the instrument panel settings. Refer to "Instrument Cluster Display" in "Getting To Know Your Instrument Panel" for more information. The speed increment shown is dependant on the speed of U.S. (mph) or Metric (km/h) units:

U.S. Speed (mph)

- Pushing the RES (+) button once will result in a 1 mph increase in set speed. Each subsequent tap of the button results in an increase of 1 mph.
- If the button is continually pushed, the set speed will continue to increase in 5 mph increments until the button is released. The increase in set speed is reflected in the instrument cluster display.

Metric Speed (km/h)

- Pushing the RES (+) button once will result in a 1 km/h increase in set speed. Each subsequent tap of the button results in an increase of 1 km/h.
- If the button is continually pushed, the set speed will continue to increase in 10 km/h increments until the button is released. The increase in set speed is reflected in the instrument cluster display.

To Decrease Speed

When the Normal (Fixed Speed) Cruise Control is set, you can decrease speed by pushing the SET (-) button.

The driver's preferred units can be selected through the instrument panel settings. Refer to ”Instrument Cluster Display” in “Getting To Know Your Instrument Panel” for more information. The speed decrement shown is dependant on the speed of U.S. (mph) or Metric (km/h) units:

U.S. Speed (mph)

- Pushing the SET (-) button once will result in a 1 mph decrease in set speed. Each subsequent tap of the button results in a decrease of 1 mph.
- If the button is continually pushed, the set speed will continue to decrease in 5 mph decrements until the button is released. The decrease in set speed is reflected in the instrument cluster display.

Metric Speed (km/h)

- Pushing the SET (-) button once will result in a 1 km/h decrease in set speed. Each subsequent tap of the button results in a decrease of 1 km/h.
- If the button is continually pushed, the set speed will continue to decrease in 10 km/h decrements until the button is released. The decrease in set speed is reflected in the instrument cluster display.

To Cancel

The following conditions will cancel the Normal (Fixed Speed) Cruise Control without clearing the memory:

- The brake pedal is applied.
- The CANC button is pushed.
- The Electronic Stability Control/Traction Control System (ESC/TCS) activates.
- The vehicle parking brake is applied.
- The braking temperature exceeds normal range (overheated).
- The gear selector is removed from the DRIVE position.
- The driver switches ESC to full-off mode.

To Resume Speed

To resume a previously set speed, push the RES (+) button and release. Resume can be used at any speed above 20 mph (32 km/h).

To Turn Off

The system will turn off and erase the set speed in memory if:

- The Normal (Fixed Speed) Cruise Control on/off button is pushed.
- The ignition is turned OFF.
- You engage Four-Wheel Drive Low.
- The Adaptive Cruise Control (ACC) on/off button is pushed.

PARKSENSE REAR PARK ASSIST — IF EQUIPPED

The ParkSense Rear Park Assist system provides visual and audible indications of the distance between the rear fascia and a detected obstacle when backing up, e.g. during a parking maneuver. Refer to "ParkSense System Usage Precautions" in this section for limitations of this system and recommendations.

ParkSense will retain the last system state (enabled or disabled) from the last ignition cycle when the ignition is changed to the ON/RUN position.

ParkSense can be active only when the gear selector is in REVERSE. If ParkSense is enabled at this gear selector position, the system will remain active until the vehicle speed is increased to approximately 7 mph (11 km/h) or above. When in REVERSE and above the system's operating speed, a warning will appear within the instrument cluster display indicating the vehicle speed is too fast. The system will become active again if the vehicle speed is decreased to speeds less than approximately 6 mph (9 km/h).

ParkSense Sensors

The four ParkSense sensors, located in the rear fascia/bumper, monitor the area behind the vehicle that is within the sensors' field of view.

The sensors can detect obstacles from approximately 18 inches (45 cm) up to 79 inches (200 cm) from the rear fascia/bumper in the horizontal direction, depending on the location, type and orientation of the obstacle.

NOTE:
If equipped as a dually, the ParkSense system has six rear sensors to assist in detection around the dually flares.

ParkSense Warning Display

The ParkSense Warning screen is located within the instrument cluster display. It provides visual warnings to indicate the distance between the rear fascia/bumper and the detected obstacle. Refer to “Instrument Cluster Display” in “Getting To Know Your Instrument Panel” for further information.

ParkSense Display

When the vehicle is in REVERSE, the warning display will turn on indicating the system status.

The system will indicate a detected obstacle by showing a single arc in the left and/or right rear regions based on the object’s distance and location relative to the vehicle.

If an object is detected in the left and/or right rear region, the display will show a single solid arc in the left and/or right rear region and the system will produce a tone. As the vehicle moves closer to the object, the display will show the single arc moving closer to the vehicle and the tone will change from a single 1/2 second tone to slow, to fast, to continuous.

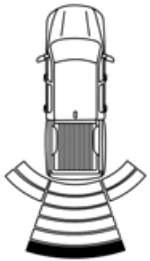

0618146256US

Single 1/2 Second Tone

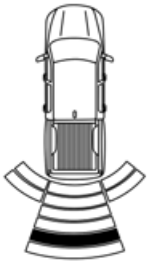

0618146258US

Slow Tone

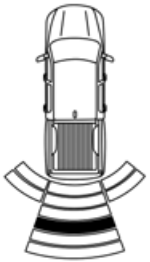

0618146260US

Slow Tone

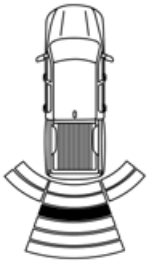

0618146263US

Fast Tone

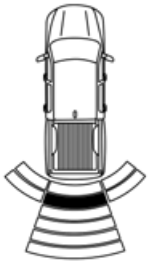

0618146265US

Fast Tone

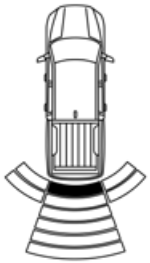

0618146304US

Continuous Tone

The vehicle is close to the obstacle when the warning display shows one flashing arc and sounds a continuous tone. The following chart shows the warning alert operation when the system is detecting an obstacle:

WARNING ALERTS							
Rear Distance (inches/cm)	Greater than 79 inches (200 cm)	79-59 inches (200-150 cm)	59-47 inches (150-120 cm)	47-39 inches (120-100 cm)	39-25 inches (100-65 cm)	25-12 inches (65-30 cm)	Less than 12 inches (30 cm)
Audible Alert Chime	None	Single 1/2 Second Tone	Slow	Slow	Fast	Fast	Continuous
Arcs-Left	None	None	None	None	None	2nd Flashing	1st Flashing
Arcs-Center	None	6th Solid	5th Solid	4th Solid	3rd Flashing	2nd Flashing	1st Flashing
Arcs-Right	None	None	None	None	None	2nd Flashing	1st Flashing
Radio Volume Reduced	No	Yes	Yes	Yes	Yes	Yes	Yes

NOTE:
ParkSense will reduce the volume of the radio, if on, when the system is sounding an audio tone.

Adjustable Chime Volume Settings

The rear chime volume settings are programmable through the Uconnect system. Refer to “Uconnect Settings” in “Multimedia” for further information.

The chime volume settings include low, medium, and high. The factory default volume is medium.

Enabling And Disabling ParkSense

ParkSense can be enabled and disabled with the ParkSense switch.

When the gear selector is moved to REVERSE and the system is disabled, the instrument cluster display will show the vehicle graphic with “Off” over the arcs for as long as the vehicle is in REVERSE.

NOTE:
The ParkSense system will automatically disable when the system detects that a trailer with trailer brakes has been connected to the Integrated Trailer Brake Module. The instrument cluster display will show an “Off” message over the arcs if the ParkSense system is off, or a “Trailer” message if the system is on, for as long as the vehicle is in REVERSE.

The ParkSense switch LED will be on when ParkSense is disabled or defective. The ParkSense switch LED will be off when the system is enabled.

If the ParkSense switch is pushed, and the system is disabled or requires service, the ParkSense switch LED will blink momentarily, and then the LED will be on.

Service The ParkSense Rear Park Assist System

During vehicle start up, when the Rear ParkSense System has detected a faulted condition, the instrument cluster display will show the "Rear ParkSense Unavailable Service Required" or the "Rear ParkSense Unavailable Wipe Sensors" message.

When the gear selector is moved into REVERSE, a vehicle graphic will show in the instrument cluster display, along with the display overlay “Rear ParkSense Unavailable Wipe Sensors.” If the system needs service, the display overlay will read “Rear ParkSense Unavailable Service Required” Under this condition, ParkSense will not operate.

If "Rear ParkSense Unavailable Wipe Sensors" appears in the instrument cluster display make sure the outer surface and the underside of the rear fascia/bumper is clean and clear of snow, ice, mud, dirt or other obstruction, and then cycle the ignition. If the message continues to appear, see an authorized dealer.

If "Rear ParkSense Unavailable Service Required" appears in the instrument cluster display, see an authorized dealer.

Cleaning The ParkSense System

Clean the ParkSense sensors with water, car wash soap and a soft cloth. Do not use rough or hard cloths. Do not scratch or poke the sensors. Otherwise, you could damage the sensors.

ParkSense System Usage Precautions

NOTE:

- Ensure that the rear bumper is free of snow, ice, mud, dirt and debris to keep the ParkSense system operating properly.
- Jackhammers, large trucks, and other vibrations could affect the performance of ParkSense.
- When you move the gear selector into REVERSE with ParkSense turned off, the instrument cluster display will show "Off" on the vehicle graphic arcs for as long as the vehicle is in REVERSE.
- ParkSense, when on, will reduce the volume of the radio when it is sounding a tone.
- Clean the ParkSense sensors regularly, taking care not to scratch or damage them. The sensors must not be covered with ice, snow, slush, mud, dirt or debris. Failure to do so can result in the system not working properly. The ParkSense system might not detect an obstacle behind the fascia/bumper, or it could provide a false indication that an obstacle is behind the fascia/bumper.
- Ensure the ParkSense system is OFF if objects such as bicycle carriers, trailer hitches, etc., are placed within 18 inches (45 cm) of the rear fascia/bumper while driving the vehicle. Failure to do so can result in the system misinterpreting a close obstacle as a sensor problem, causing the "Rear ParkSense Unavailable Service Required" message to appear in the instrument cluster display.
- On vehicles equipped with a tailgate, ParkSense should be disabled when the tailgate is in the lowered or open position and the vehicle is in REVERSE. A lowered tailgate could provide a false indication that an obstacle is behind the vehicle.

WARNING!

- **Drivers must be careful when backing up even when using ParkSense. Always check carefully behind your vehicle, look behind you, and be sure to check for pedestrians, animals, other vehicles, obstructions, and blind spots before backing up. You are responsible for safety and must continue to pay attention to your surroundings. Failure to do so can result in serious injury or death.**

(Continued)

WARNING! *(Continued)*

- **Before using ParkSense, it is strongly recommended that the ball mount and hitch ball assembly is disconnected from the vehicle when the vehicle is not used for towing. Failure to do so can result in injury or damage to vehicles or obstacles because the hitch ball will be much closer to the obstacle than the rear fascia when the loudspeaker sounds the continuous tone. Also, the sensors could detect the ball mount and hitch ball assembly, depending on its size and shape, giving a false indication that an obstacle is behind the vehicle.**

CAUTION!

- **ParkSense is only a parking aid and it is unable to recognize every obstacle, including small obstacles. Parking curbs might be temporarily detected or not detected at all. Obstacles located above or below the sensors will not be detected when they are in close proximity.**
- **The vehicle must be driven slowly when using ParkSense in order to be able to stop in time when an obstacle is detected. It is recommended that the driver looks over his/her shoulder when using ParkSense.**

PARKSENSE FRONT AND REAR PARK ASSIST

The ParkSense Park Assist system provides visual and audible indications of the distance between the rear, and/or front fascia/bumper, and a detected obstacle when backing up or moving forward, e.g. during a parking maneuver.

Refer to "ParkSense System Usage Precautions" in this section for limitations of this system and recommendations.

ParkSense will retain the last system state (enabled or disabled) from the last ignition cycle when the ignition is changed to the ON/RUN position.

ParkSense can be active only when the gear selector is in REVERSE or DRIVE. If ParkSense is enabled at one of these gear selector positions, the system will remain active until the vehicle speed is increased to approximately 7 mph (11 km/h) or above. A warning will appear in the instrument cluster display when the vehicle is in REVERSE, indicating the vehicle is above ParkSense operating speed. The system will become active again if the vehicle speed is decreased to speeds less than approximately 6 mph (9 km/h).

ParkSense Sensors

The four ParkSense sensors, located in the rear fascia/bumper, monitor the area behind the vehicle that is within the sensors' field of view.

The sensors can detect obstacles from approximately 18 inches (45 cm) up to 79 inches (200 cm) from the rear fascia/bumper in the horizontal direction, depending on the location, type and orientation of the obstacle.

NOTE:
If equipped as a dually, the ParkSense system has six rear sensors to assist in detection around the dually flares.

The six ParkSense sensors, located in the front fascia/bumper, monitor the area in front of the vehicle that is within the sensors' field of view. The sensors can detect obstacles from approximately 12 inches (30 cm) up to 47 inches (120 cm) from the front fascia/bumper in the horizontal direction, depending on the location, type and orientation of the obstacle.

ParkSense Warning Display

The ParkSense Warning screen is located within the instrument cluster display. It provides visual warnings to indicate the distance between the rear fascia/bumper and/or front fascia/bumper and the detected obstacle. Refer to "Instrument Cluster Display" in "Getting To Know Your Instrument Panel" for further information.

ParkSense Display

The warning display will turn on indicating the system status when the vehicle is in REVERSE or when the vehicle is in DRIVE and an obstacle has been detected.

The system will indicate a detected obstacle by showing a single arc in the left and/or right rear regions based on the obstacle's distance and location relative to the vehicle.

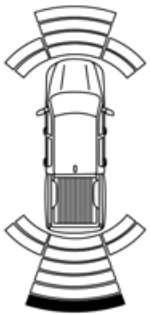

0618146255US

Single 1/2 Second Tone

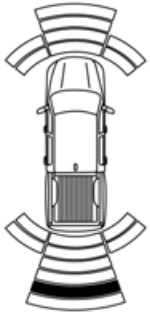

0618146257US

Slow Tone

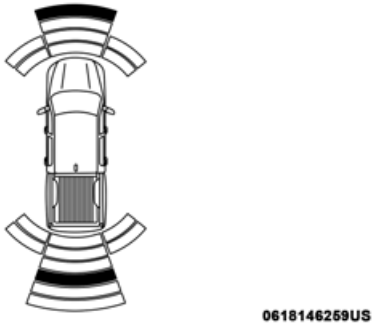

Slow Tone For Rear Only

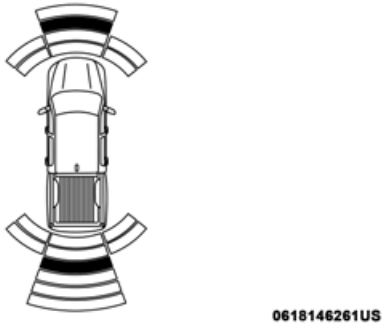

Fast Tone For Rear Only

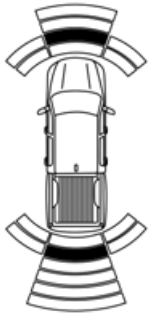

0618146264US

Fast Tone

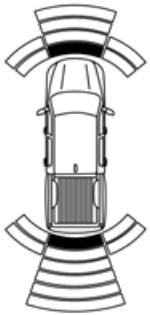

0618146266US

Continuous Tone

If an obstacle is detected in the left and/or right rear region, the display will show a single arc in the left and/or right rear region and the system will produce a tone. As the vehicle moves closer to the obstacle, the display will show the single arc moving closer to the vehicle and the tone will change from a single 1/2 second tone to slow, to fast, to continuous.

The vehicle is close to the obstacle when the display shows one flashing arc and sounds a continuous tone. The following chart shows the warning alert operation when the system is detecting an obstacle:

WARNING ALERTS FOR REAR							
Rear Distance (inches/cm)	Greater than 79 inches (200 cm)	79-59 inches (200-150 cm)	59-47 inches (150-120 cm)	47-39 inches (120-100 cm)	39-25 inches (100-65 cm)	25-12 inches (65-30 cm)	Less than 12 inches (30 cm)
Audible Alert Chime	None	Single 1/2 Second Tone	Slow	Slow	Fast	Fast	Continuous
Arcs-Left	None	None	None	None	None	2nd Flashing	1st Flashing
Arcs-Center	None	6th Solid	5th Solid	4th Solid	3rd Flashing	2nd Flashing	1st Flashing
Arcs-Right	None	None	None	None	None	2nd Flashing	1st Flashing
Radio Volume Reduced	No	Yes	Yes	Yes	Yes	Yes	Yes

WARNING ALERTS FOR FRONT					
Front Distance (inches/cm)	Greater than 47 inches (120 cm)	47-39 inches (120-100 cm)	39-25 inches (100-65 cm)	25-12 inches (65-30 cm)	Less than 12 inches (30 cm)
Audible Alert Chime	None	None	None	Fast	Continuous
Arcs-Left	None	None	None	2nd Flashing	1st Flashing
Arcs-Center	None	4th Solid	3rd Flashing	2nd Flashing	1st Flashing
Arcs-Right	None	None	None	2nd Flashing	1st Flashing
Radio Volume Reduced	No	No	No	Yes	Yes

NOTE:
ParkSense will reduce the volume of the radio, if on, when the system is sounding an audio tone.

Front Park Assist Audible Alerts

ParkSense will turn off the Front Park Assist audible alert (chime) after approximately three seconds when an obstacle has been detected, the vehicle is stationary, and brake pedal is applied.

Adjustable Chime Volume Settings

The Front and Rear chime volume settings are programmable through the Uconnect system. Refer to “Uconnect Settings” in “Multimedia” for further information.

The chime volume settings include low, medium, and high. The factory default volume is medium.

Enabling And Disabling Front And/Or Rear ParkSense

Front ParkSense can be enabled and disabled with the Front ParkSense switch.

Rear ParkSense can be enabled and disabled with the Rear ParkSense switch.

P OFF When the gear selector is moved to REVERSE and the Front or Rear system is disabled, the instrument cluster display will show the “Off” message. This vehicle graphic will be displayed for as long as the vehicle is in REVERSE.

The Front or Rear ParkSense switch LED will be on when Front or Rear ParkSense is disabled or requires service. The Front or Rear ParkSense switch LED will be off when the Front or Rear system is enabled. If the Front or Rear ParkSense switch is pushed, and the system requires service, the Front or Rear ParkSense switch LED will blink momentarily, and then the LED will be on.

Service The ParkSense Front/Rear Park Assist System

During vehicle start up, when the Front/Rear ParkSense System has detected a faulted condition, the instrument cluster display will show the "Front/Rear ParkSense Unavailable Service Required" or the "Front/Rear ParkSense Unavailable Wipe Sensors" message.

When the gear selector is moved into REVERSE, a vehicle graphic will show in the instrument cluster display, along with the display overlay “Front/Rear ParkSense Unavailable Wipe Sensors.” If the system needs service, the display overlay will read “Front/Rear ParkSense Unavailable Service Required.” Under this condition, ParkSense will not operate.

If "Front/Rear ParkSense Unavailable Wipe Sensors" appears in the instrument cluster display make sure the outer surface and the underside of the rear fascia/bumper is clean and clear of snow, ice, mud, dirt or other obstruction, and then cycle the ignition. If the message continues to appear, see an authorized dealer.

If "Front/Rear ParkSense Unavailable Service Required" appears in the instrument cluster display, see an authorized dealer.

Cleaning The ParkSense System

Clean the ParkSense sensors with water, car wash soap and a soft cloth. Do not use rough or hard cloths. Do not scratch or poke the sensors. Otherwise, you could damage the sensors.

ParkSense System Usage Precautions

NOTE:

- Ensure that the front and rear bumpers are free of snow, ice, mud, dirt and debris to keep the ParkSense system operating properly.
- Jackhammers, large trucks, and other vibrations could affect the performance of ParkSense.
- When you move the gear selector to the REVERSE position and Front or Rear ParkSense is turned off, the instrument cluster display will show "Off" on the vehicle graphic arcs. This vehicle graphic will be displayed for as long as the vehicle is in REVERSE.
- ParkSense, when on, will reduce the volume of the radio when it is sounding a tone.
- Clean the ParkSense sensors regularly, taking care not to scratch or damage them. The sensors must not be covered with ice, snow, slush, mud, dirt or debris. Failure to do so can result in the system not working properly. The ParkSense system might not detect an obstacle behind or in front of the fascia/bumper, or it could provide a false indication that an obstacle is behind or in front of the fascia/bumper.
- Use the ParkSense switch to turn the ParkSense system off if obstacles such as bicycle carriers, trailer hitches, etc. are placed within 18 inches (45 cm) from the rear fascia/bumper. Failure to do so can result in the system misinterpreting a close obstacle as a sensor problem, causing the “Front/Rear ParkSense Unavailable Service Required” message to be appear in the instrument cluster display.
- On vehicles equipped with a tailgate, ParkSense should be disabled when the tailgate is in the lowered or open position. A lowered tailgate could provide a false indication that an obstacle is behind the vehicle.

WARNING!

- **Drivers must be careful when backing up even when using ParkSense. Always check carefully behind your vehicle, look behind you, and be sure to check for pedestrians, animals, other vehicles, obstructions, and blind spots before backing up. You are responsible for safety and must continue to pay attention to your surroundings. Failure to do so can result in serious injury or death.**
- **Before using ParkSense, it is strongly recommended that the ball mount and hitch ball assembly is disconnected from the vehicle when the vehicle is not used for towing. Failure to do so can result in injury or damage to vehicles or obstacles because the hitch ball will be much closer to the obstacle than the rear fascia when the loudspeaker sounds the continuous tone. Also, the sensors could detect the ball mount and hitch ball assembly, depending on its size and shape, giving a false indication that an obstacle is behind the vehicle.**

CAUTION!

- **ParkSense is only a parking aid and it is unable to recognize every obstacle, including small obstacles. Parking curbs might be temporarily detected or not detected at all. Obstacles located above or below the sensors will not be detected when they are in close proximity.**
- **The vehicle must be driven slowly when using ParkSense in order to be able to stop in time when an obstacle is detected. It is recommended that the driver looks over his/her shoulder when using ParkSense.**

PARKVIEW REAR BACK UP CAMERA

Your vehicle may be equipped with the ParkView Rear Back Up Camera that allows you to see a image of the rear surroundings of your vehicle whenever the gear selector is put into REVERSE or whenever it is initiated through the "Backup Camera" button in the "Controls" menu. Whenever the gear selector is put into REVERSE, the image will be displayed in the rearview mirror display (if equipped) or Uconnect screen (if equipped). If the image is displayed in the Uconnect screen, a caution note to “check entire surroundings” will display across the top of the screen. After five seconds this note will disappear.

Manual Activation Of The Rear View Camera:

1. Press the "Controls" button located on the bottom of the Uconnect display.
2. Press the "Backup Camera" button to turn the Rear View Camera system on.

When the vehicle is shifted out of REVERSE (with Camera delay turned off), the rear Camera mode is exited and the previous screen appears again.

When the vehicle is shifted out of REVERSE (with Camera delay turned on), the rear Camera image will be displayed for up to 10 seconds after shifting to another gear, unless the vehicle speed exceeds 8 mph (13 km/h), the transmission is shifted into PARK, the ignition is switched to the OFF position, or the touchscreen button “X” to disable display of the Rear View Camera image is pressed.

Whenever the Rear View Camera image is activated through the "Backup Camera" button in the "Controls" menu, and the vehicle speed is greater than, or equal to, 8 mph (13 km/h), a display timer for the image is initiated. The image will continue to be displayed until the display timer exceeds 10 seconds.

NOTE:

- If the vehicle speed remains below 8 mph (13 km/h), the Rear View Camera image will be displayed continuously until deactivated via the touchscreen button "X", the transmission is shifted into PARK, or the ignition is cycled to the OFF position.
- The touchscreen button "X" to disable display of the camera image is made available ONLY when the vehicle is not in REVERSE.

If Equipped — Cargo Camera Icons:

- — Backup Camera Touchscreen Button
- — Cargo Camera Touchscreen Button
- — AUX Camera Touchscreen Button

If equipped with a Cargo Camera, a touchscreen button to indicate the current active Camera image being displayed is made available whenever the Rear View Camera image is displayed.

If equipped with a Cargo Camera, a touchscreen button to switch the display to Cargo Camera image is made available whenever the Rear View Camera image is displayed.

A touchscreen button "X" to disable display of the camera image is made available when the vehicle is not in REVERSE gear.

When enabled, active guide lines are overlaid on the backup camera image to illustrate the width of the vehicle and its projected backup path based on the steering wheel position. The active guide lines will show separate zones that will help indicate the distance to the rear of the vehicle.

NOTE:
For further information about how to access and change the programmable features of the ParkView Rear Backup Camera, refer to “Uconnect Settings” in “Multimedia.”

A dashed center line overlay indicates the center of the vehicle to assist with parking or aligning to a hitch/receiver. The following table shows the approximate distances for each zone:

Zones	Distance To The Rear Of The Vehicle
Red	0 - 1 ft (0 - 30 cm)
Yellow	1 ft - 6.5 ft (30 cm - 2m)
Green	6.5 ft or greater (2 m or greater)

WARNING!
Drivers must be careful when backing up even when using the ParkView Rear Back Up Camera. Always check carefully behind your vehicle, and be sure to check for pedestrians, animals, other vehicles, obstructions, or blind spots before backing up. You are responsible for the safety of your surroundings and must continue to pay attention while backing up. Failure to do so can result in serious injury or death.

CAUTION!

- **To avoid vehicle damage, ParkView should only be used as a parking aid. The ParkView camera is unable to view every obstacle or object in your drive path.**
- **To avoid vehicle damage, the vehicle must be driven slowly when using ParkView to be able to stop in time when an obstacle is seen. It is recommended that the driver look frequently over his/her shoulder when using ParkView.**

The ParkView Camera is located in the center of the tailgate handle.

NOTE:
If snow, ice, mud, or any foreign substance builds up on the camera lens, clean the lens, rinse with water, and dry with a soft cloth. Do not cover the lens.

Zoom View

When the Rear View Camera image is being displayed, and the vehicle speed is below 8 mph (13 km/h) while in any gear selector position, Zoom View is available. By pressing the "magnifying glass" icon in the upper left of the display screen, the image will zoom in to four times the standard view. Pressing the icon a second time will return the view to the standard Backup Camera display.

When Zoom View is selected while the vehicle is in REVERSE, then shifted to DRIVE, the camera delay view will display the standard Backup Camera view. If the vehicle is then returned to REVERSE gear from DRIVE, the Zoom View selection will automatically resume.

Shifting to NEUTRAL from any gear will maintain the selected view (Zoom or Standard) as long as the vehicle is below 8 mph (13 km/h).

If the vehicle is in PARK, Zoom View is available until the gear selector is placed in DRIVE or REVERSE and speeds are at or above 8 mph (13 km/h).

NOTE:

- If the vehicle in is DRIVE, NEUTRAL, or REVERSE, and speed is greater than or equal to 8 mph (13 km/h), Zoom View is unavailable and the icon will appear grey.
- While in Zoom View, the guidelines will not be visible.

AUX Camera — If Equipped

Your vehicle may be equipped with one or two AUX Cameras, which display rearview and side view images from the trailer on the touchscreen.

Activating AUX Camera

Backup Camera Only: The AUX Camera is activated by first pressing the Backup Camera button on the touchscreen, followed by the AUX button located in the upper left corner of the rearview display. The AUX camera can also be activated when the vehicle is in REVERSE by pressing the AUX button.

If equipped with two AUX Cameras, you can switch between each camera by then pressing the AUX 1 or AUX 2 buttons on the Trailer Camera display.

Backup And Cargo Camera: The AUX Camera is activated by first pressing either the Backup Camera or Cargo Camera button on the touchscreen, followed by the AUX button located in the upper left corner of the rearview display.

If equipped with two AUX Cameras, you can switch between each camera by pressing the AUX 1 or AUX 2 buttons on the Trailer Camera display.

Surround View Camera: The AUX Camera is activated by first pressing the Cargo Camera button on the touchscreen, followed by the AUX button located in the upper left corner of the rearview display. The AUX Camera can also be activated by pressing the Backup Camera button or Surround View Camera button on the touchscreen, followed by the AUX button.

If equipped with two AUX Cameras, you can switch between each camera by pressing the AUX 1 or AUX 2 buttons on the Trailer Camera display.

Deactivation

The AUX Camera is deactivated by pressing the “X” in the upper right corner of the touchscreen. This will return the display back to the previously displayed screen.

NOTE:

- If the AUX button is pressed and no AUX Camera is connected, the touchscreen will display a blue screen along with the message “Camera System Unavailable.” The screen can be exited out by pressing the “X” in the upper right hand corner. This will return the display back to the previously displayed screen.
- Zoom View is not available with the AUX Camera feature.

- The display will always default to the Trailer Camera display (AUX 1).
- The “X” button is not available when the vehicle is in REVERSE unless it is acting as a back button within camera views. The camera image must always be displayed when the vehicle is in REVERSE.

SURROUND VIEW CAMERA SYSTEM — IF EQUIPPED

Your vehicle may be equipped with the Surround View Camera System that allows you to see an on-screen image of the surroundings and top view of your vehicle whenever the gear selector is put into REVERSE or a different view is selected through the "on screen soft buttons". The top view of the vehicle will show which doors are open. The image will be displayed on the touchscreen display along with a caution note “Check Entire Surroundings” across the top of the screen. After five seconds, this note will disappear. The Surround View Camera System is comprised of four sequential cameras located in the front grille, rear tailgate and side mirrors.

NOTE:

- The Surround View Camera System has programmable settings that may be selected through the Uconnect System. Refer to “Uconnect Settings” in “Multimedia” for further information.

When the vehicle is shifted into REVERSE, the rear camera view and top view is the default view of the system (Automatic Activation).

When the vehicle is shifted out of REVERSE (with camera delay turned on), the camera image will continue to be displayed for up to 10 seconds after shifting out of REVERSE unless the vehicle speed exceeds 8 mph (13 km/h), the vehicle is shifted into PARK or the ignition is switched to the OFF position. There is a touch screen button (X) to disable the display of the camera image.

When the vehicle is shifted out of REVERSE (with camera delay turned off), the surround view camera mode is exited and the last known screen appears again.

While the “rear view” is displayed, and if enabled, active guide lines are overlaid on the image to illustrate the width of the vehicle, including the side view mirrors and its projected backup path based on the steering wheel position.

Different colored zones indicate the distance to the rear of the vehicle.

The following table shows the approximate distances for each zone:

Zone	Distance To The Rear Of The Vehicle
Red	0 - 1 ft (0 - 30 cm)
Yellow	1 ft - 6.5 ft (30 cm - 2 m)
Green	6.5 ft or greater (2 m or greater)

Modes Of Operation

Standard Backup Camera view can be manually activated by selecting "Backup Camera" through the Controls menu within the Uconnect screen.

Refer to "Parkview Rear Back Up Camera" in this section for more information on activation conditions.

Top View

The Top view will show in the Uconnect System with Rear View and Front View in a split view display. There are integrated ParkSense arcs in the image at the front and rear of the vehicle. The arcs will change color from yellow to red corresponding the distance zones to the oncoming object.

The fifth button of the ParkSense Camera View screen will be changed based on the cameras present in the vehicle. If not equipped with a Cargo Camera or Trailer Reverse Guidance, the Backup Camera soft button will be displayed. If equipped with a Cargo Camera but no Trailer Reverse Guidance, the Cargo Camera soft button will be displayed, and if equipped with both a Cargo Camera and Trailer Reverse

Guidance, the Trailer Reverse Guidance soft button will be displayed.

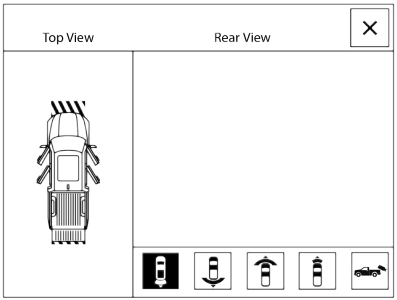

0619124417US

ParkSense Camera View

NOTE:

- Front tires will be in image when the tires are turned.
- Due to wide angle cameras in mirror, the image will appear distorted.
- Top view will show which doors are open.
- Open front doors will remove outside image.

Rear View

This is the Default view of the system in REVERSE and is always paired with the Top view of the vehicle with optional active guide lines for the projected path when enabled.

Rear Cross Path View

Pressing the Rear Cross Path soft key will give the driver a wider angle view of the rear camera system. The Top view will be disabled when this is selected.

Front View

The Front view will show you what is immediately in front of the vehicle and is always paired with the Top view of the vehicle.

Front Cross Path View

Pressing the Front Cross Path soft key will give the driver a wider angle view of the front camera system. The Top view will be disabled when this is selected.

Rear View Camera

Pressing the Backup Camera soft key will provide a full screen rear view with Zoom View.

NOTE:
If the Backup Camera view was selected through the Surround View Screen, exiting out of the Rear View Camera screen will return to the Surround View Screen. If the Backup Camera was manually activated through the Controls menu of the Uconnect display, exiting out of the display screen will return to the Controls menu.

Cargo Camera

Pressing the Cargo Camera soft key will provide a full screen view of the cargo area.

NOTE:
If the Cargo Camera view was selected through the Rear View Camera screen, exiting out of the Cargo Camera screen will return to the Rear View Camera screen. If the Cargo Camera was manually activated through the Controls menu of the Uconnect display, exiting out of the display screen will return to the Controls menu.

Trailer Reverse Guidance

Pressing the Trailer Reverse Guidance soft key will provide a full screen view of the cargo area and trailer.

NOTE:
If the Trailer Reverse Guidance was selected through the Rear View Camera screen, exiting out of the Trailer Reverse Guidance screen will return to the Rear View Camera screen. If the Trailer Reverse Guidance was manually activated through the Controls menu of the Uconnect display, exiting out of the display screen will return to the Controls menu.

Zoom View

When the Rear View Camera image is being displayed, and the vehicle speed is below 8 mph (13 km/h) while in any gear selector position, Zoom View is available. By pressing the “magnifying glass” icon in the upper left of the display screen, the image will zoom in to four times the standard view. Pressing the icon a second time will return the view to the standard Backup Camera display.

When Zoom View is selected while the vehicle is in REVERSE, then shifted to DRIVE, the camera delay view will display the standard Backup Camera view. If the vehicle is then returned to REVERSE gear from DRIVE, the Zoom View selection will automatically resume.

Shifting to NEUTRAL from any gear will maintain the selected view (Zoom or Standard) as long as the vehicle is below 8 mph (13 km/h).

If the vehicle is in PARK, Zoom View is available until the gear selector is placed in DRIVE or REVERSE and speeds are at or above 8 mph (13 km/h).

NOTE:

- If the vehicle in is DRIVE, NEUTRAL, or REVERSE, and speed is greater than or equal to 8 mph (13 km/h), Zoom View is unavailable and the icon will appear grey.
- While in Zoom View, the guidelines will not be visible.

Deactivation

The system is deactivated in the following conditions if it was activated **automatically:**

- When the vehicle is shifted out of REVERSE (with camera delay turned on), the camera image will continue to be displayed for up to 10 seconds after shifting out of REVERSE unless the vehicle speed exceeds 8 mph (13 km/h), the vehicle is shifted into PARK or the ignition is switched to the OFF position. There is a touch screen button (X) to disable the display of the camera image.
- When the vehicle is shifted out of REVERSE (with camera delay turned off), the surround view camera mode is exited and the last known screen appears again.

The system is deactivated in the following conditions if it was activated **manually** from the Uconnect controls menu via Surround View button or Backup Camera button:

- The "X" button on the display is pressed
- Vehicle is shifted into PARK
- Ignition is cycled to OFF
- Vehicle speed is over 8 mph (13 km/h) for 10 seconds

NOTE:
If the Surround View Camera is activated manually, and the vehicle is shifted into REVERSE, deactivation methods for automatic activation are assumed.

The camera delay system is turned off manually through the Uconnect settings menu. Refer to "Uconnect Settings" in "Multimedia" for further information.

NOTE:

- If snow, ice, mud, or any foreign substance builds up on the camera lenses, clean the lenses, rinse with water, and dry with a soft cloth. Do not cover the lenses.
- If a malfunction with the system has occurred, see your nearest authorized dealer.

Cargo Camera With Dynamic Centerline — If Equipped

The Dynamic Centerline feature provides an overlay on the Cargo Camera display screen that aligns to the center of the pickup box to aid in hooking up a fifth wheel camper or gooseneck trailer. The centerline auto aligns to the center of the pickup box, and can also be manually adjusted. The centerline will adjust in response to steering angle inputs, and will not obstruct the gooseneck receiver or an approaching trailer gooseneck in the camera feed.

Activation

The Dynamic Centerline feature can be activated through the Uconnect settings by pressing the Cargo Camera soft button, followed by the "Dynamic Centerline" soft button on the touchscreen.

If the Dynamic Centerline feature is turned on, the overlay will display anytime the Cargo Camera image is displayed.

Adjusting Centerline

Follow the steps below to manually adjust the centerline:

1. Press the "Adjust Centerline" soft button located in the bottom right corner of the Cargo Camera display.
2. Use the arrows on the bottom left corner of the Cargo Camera display to adjust the centerline horizontally or vertically.
3. Once the desired position is achieved, press the "Accept" button to set the centerline to the newly specified position.

Deactivation

The Dynamic Centerline feature will automatically be deactivated whenever the Cargo Camera display is deactivated. It can also be manually deactivated through the Uconnect settings.

Forward Facing Camera With Tire Lines — If Equipped

The Forward Facing Camera displays a front view image of the road ahead, along with tire lines to guide the driver when driving on narrow roads.

Activation

The Forward Facing Camera can be activated by pressing the Forward Camera soft button on the touchscreen.

Once activated, the camera image will remain on as long as the vehicle speed is below 8 mph (13 km/h).

Deactivation

The Forward Facing Camera is deactivated in the following conditions:

- The vehicle speed exceeds 8 mph (13 km/h) for 10 seconds.
- The "X" button on the display is pressed.
- Vehicle is shifted into PARK.
- Ignition is cycled to OFF.

NOTE:
The Forward Facing Camera cannot be deactivated when the vehicle is in 4LO.

Trailer Reverse Guidance — If Equipped

The Trailer Reverse Guidance feature assists the driver in backing up a trailer by providing adjustable camera views of the trailer and surrounding area. The cameras are mounted on the side mirrors and the images will be displayed side-by-side on the touchscreen. Left and right camera images are swapped and mirrored on the touchscreen to show the equivalent area behind the vehicle as though the driver is using the side mirrors.

Activation

The Trailer Reverse Guidance feature can be activated by pressing the Trailer Reverse Guidance button on the touchscreen.

Deactivation

Once activated, the image will continue to be displayed in any gear until the vehicle speed exceeds 8 mph (13 km/h).

WARNING!

Drivers must be careful when backing up even when using the Surround View Camera. Always check carefully behind your vehicle, and be sure to check for pedestrians, animals, other vehicles, obstructions, or blind spots before backing up. You are responsible for the safety of your surroundings and must continue to pay attention while backing up. Failure to do so can result in serious injury or death.

CAUTION!

- **To avoid vehicle damage, Surround View should only be used as a parking aid. The Surround View camera is unable to view every obstacle or object in your drive path.**
- **To avoid vehicle damage, the vehicle must be driven slowly when using Surround View to be able to stop in time when an obstacle is seen. It is recommended that the driver look frequently over his/her shoulder when using Surround View.**

REFUELING THE VEHICLE — GAS ENGINE

The fuel filler cap (gas cap) is located behind the fuel filler door, on the left side of the vehicle. Open the fuel door and remove the fuel cap by turning it counter-clockwise.

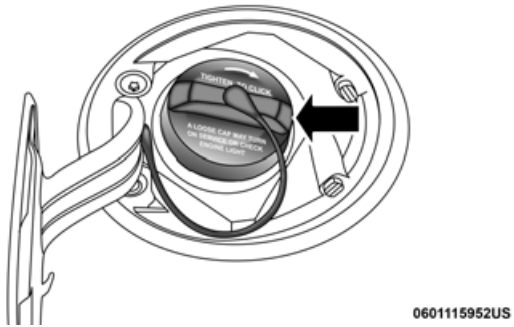

Fuel Filler Cap

NOTE:
When removing the fuel filler cap, lay the cap tether in the hook, located on the fuel filler door.

WARNING!

- **Never have any smoking materials lit in or near the vehicle when the gas cap is removed or the tank is being filled.**
- **Never add fuel to the vehicle when the engine is running.**
- **A fire may result if gasoline is pumped into a portable container that is inside of a vehicle. You could be burned. Always place gas containers on the ground while filling.**

CAUTION!

- **Damage to the fuel system or emissions control system could result from using an improper fuel tank filler tube cap.**
- **A poorly fitting fuel filler cap could let impurities into the fuel system.**
- **A poorly fitting fuel filler cap may cause the "Malfunction Indicator Light (MIL)" to turn on.**
- **To avoid fuel spillage and overfilling, do not "top off" the fuel tank after filling. When the fuel nozzle "clicks" or shuts off, the fuel tank is full.**

NOTE:

- When the fuel nozzle "clicks" or shuts off, the fuel tank is full.
- Tighten the gas cap until you hear a "clicking" sound. This is an indication that the gas cap is tightened properly. The MIL in the instrument cluster may turn on if the gas cap is not secured properly. Make sure that the gas cap is tightened each time the vehicle is refueled.

WARNING!

- **Always place container on the ground before filling.**
- **Keep the pump nozzle in contact with the container when you are filling it.**
- **Use only approved containers for flammable liquid.**
- **Do not leave container unattended while filling.**
- **A static electric charge could cause a spark and fire hazard.**

Loose Fuel Filler Cap Message

If the vehicle diagnostic system determines that the fuel filler cap is loose, improperly installed, or damaged, a loose gascap indicator will display in the instrument cluster telltale display area. Refer to “Instrument Cluster Display” in “Getting To Know Your Instrument Panel” for further information. Tighten the fuel filler cap properly and push the RIGHT button to turn off the message. If the problem continues, the message will appear the next time the vehicle is started.

VEHICLE LOADING

Gross Vehicle Weight Rating (GVWR)

The GVWR is the total permissible weight of your vehicle including driver, passengers, vehicle, options and cargo. The label also specifies maximum capacities of front and rear axle systems (GAWR). Total load must be limited so GVWR and front and rear GAWR are not exceeded.

Payload

The payload of a vehicle is defined as the allowable load weight a truck can carry, including the weight of the driver, all passengers, options and cargo.

Gross Axle Weight Rating (GAWR)

The GAWR is the maximum permissible load on the front and rear axles. The load must be distributed in the cargo area so that the GAWR of each axle is not exceeded.

Each axle GAWR is determined by the components in the system with the lowest load carrying capacity (axle, springs, tires or wheels). Heavier axles or suspension components sometimes specified by purchasers for increased durability does not necessarily increase the vehicle's GVWR.

Tire Size

The tire size on the Vehicle Certification Label represents the actual tire size on your vehicle. Replacement tires must be equal to the load capacity of this tire size.

Rim Size

This is the rim size that is appropriate for the tire size listed.

Inflation Pressure

This is the cold tire inflation pressure for your vehicle for all loading conditions up to full GAWR.

Curb Weight

The curb weight of a vehicle is defined as the total weight of the vehicle with all fluids, including vehicle fuel, at full capacity conditions, and with no occupants or cargo loaded into the vehicle. The front and rear curb weight values are determined by weighing your vehicle on a commercial scale before any occupants or cargo are added.

Loading

The actual total weight and the weight of the front and rear of your vehicle at the ground can best be determined by weighing it when it is loaded and ready for operation.

The entire vehicle should first be weighed on a commercial scale to insure that the GVWR has not been exceeded. The weight on the front and rear of the vehicle should then be determined separately to be sure that the load is properly distributed over the front and rear axle. Weighing the vehicle may show that the GAWR of either the front or rear axles has been exceeded but the total load is within the specified GVWR. If so, weight must be shifted from front to rear or rear to front as appropriate until the specified weight limitations are met. Store the heavier items down low and be sure that the weight is distributed equally. Stow all loose items securely before driving.

Improper weight distributions can have an adverse effect on the way your vehicle steers and handles and the way the brakes operate.

CAUTION!
Do not load your vehicle any heavier than the GVWR or the maximum front and rear GAWR. If you do, parts on your vehicle can break, or it can change the way your vehicle handles. This could cause you to lose control. Also overloading can shorten the life of your vehicle.

TRAILER TOWING

In this section you will find safety tips and information on limits to the type of towing you can reasonably do with your vehicle. Before towing a trailer, carefully review this information to tow your load as efficiently and safely as possible.

To maintain the New Vehicle Limited Warranty coverage, follow the requirements and recommendations in this manual concerning vehicles used for trailer towing.

Common Towing Definitions

The following trailer towing related definitions will assist you in understanding the following information:

Gross Vehicle Weight Rating (GVWR)

The GVWR is the total allowable weight of your vehicle. This includes driver, passengers, cargo and tongue weight. The total load must be limited so that you do not exceed the GVWR. Refer to “Vehicle Loading/Vehicle Certification Label” in “Starting And Operating” for further information.

Gross Trailer Weight (GTW)

The GTW is the weight of the trailer plus the weight of all cargo, consumables and equipment (permanent or temporary) loaded in or on the trailer in its "loaded and ready for operation" condition.

The recommended way to measure GTW is to put your fully loaded trailer on a vehicle scale. The entire weight of the trailer must be supported by the scale.

WARNING!
If the gross trailer weight is 5,000 lbs (2,267 kg) or more, it is recommended to use a weight-distributing hitch to ensure stable handling of your vehicle. If you use a standard weight-carrying hitch, you could lose control of your vehicle and cause a collision.

Gross Combination Weight Rating (GCWR)

The GCWR is the total allowable weight of your vehicle and trailer when weighed in combination.

Gross Axle Weight Rating (GAWR)

The GAWR is the maximum capacity of the front and rear axles. Distribute the load over the front and rear axles evenly. Make sure that you do not exceed either front or rear GAWR. Refer to “Vehicle Loading/Vehicle Certification Label” in “Starting And Operating” for further information.

WARNING!
It is important that you do not exceed the maximum front or rear GAWR. A dangerous driving condition can result if either rating is exceeded. You could lose control of the vehicle and have a collision.

Tongue Weight (TW)

The tongue weight is the downward force exerted on the hitch ball by the trailer. You must consider this as part of the load on your vehicle.

Trailer Frontal Area

The frontal area is the maximum height multiplied by the maximum width of the front of a trailer.

Trailer Sway Control

The trailer sway control can be a mechanical telescoping link that can be installed between the hitch receiver and the trailer tongue that typically provides adjustable friction associated with the telescoping motion to dampen any unwanted trailer swaying motions while traveling.

If equipped, the electronic Trailer Sway Control (TSC) recognizes a swaying trailer and automatically applies individual wheel brakes and/or reduces engine power to attempt to eliminate the trailer sway.

Weight-Carrying Hitch

A weight-carrying hitch supports the trailer tongue weight, just as if it were luggage located at a hitch ball or some other connecting point of the vehicle. These kinds of hitches are the most popular on the market today and they are commonly used to tow small and medium sized trailers.

Weight-Distributing Hitch

A weight-distributing system works by applying leverage through spring (load) bars. They are typically used for heavier loads to distribute trailer tongue weight to the tow vehicle's front axle and the trailer axle(s). When used in accordance with the manufacturer's directions, it provides for a more level ride, offering more consistent steering and brake control, thereby enhancing towing safety. The addition of a friction/hydraulic sway control also dampens sway caused by traffic and crosswinds and contributes positively to tow vehicle and trailer stability. Trailer sway control and a weight distributing (load equalizing) hitch are recommended for heavier Tongue Weights (TW) and may be required depending on vehicle and trailer configuration/loading to comply with GAWR requirements.

WARNING!

- **An improperly adjusted weight distributing hitch system may reduce handling, stability and braking performance and could result in a collision.**
- **Weight distributing systems may not be compatible with surge brake couplers. Consult with your hitch and trailer manufacturer or a reputable Recreational Vehicle dealer for additional information.**

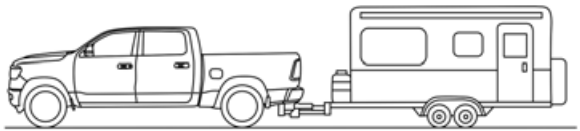

0621126504US

With Weight-Distributing Hitch (Correct)

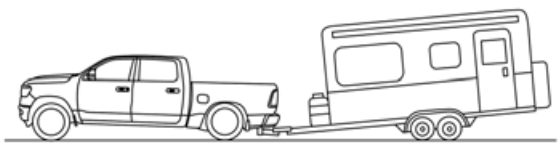

0621126505US

Without Weight-Distributing Hitch (Incorrect)

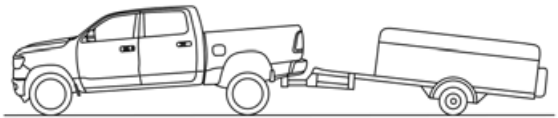

0621126503US

Improper Adjustment Of Weight-Distributing Hitch (Incorrect)

Recommended Distribution Hitch Adjustment

Towing With 2500/3500 Air Suspension

1. Position the truck to be ready to connect to the trailer (do not connect the trailer).

NOTE:
Normal Ride Height (NRH) or Alternate Trailer Height (ATH) can be used. The vehicle must remain in the engine running position while attaching a trailer for proper leveling of the air suspension system. It may not be possible to enter Alternate Trailer Height (ATH) while lightly loaded.

2. Measure the height of the top of the front wheel opening on the fender to ground, this is height H1.
3. Attach the trailer to the vehicle without the weight distribution bars connected.
4. Measure the height of the top of the front wheel opening on the fender to ground, this is height H2.
5. Install and adjust the tension in the weight distributing bars per the manufacturers' recommendations so that the height of the front fender is approximately (H2-H1)/2+H1 (about 1/2 the difference between H2 and H1 above normal ride height [H1]).

6. Perform a visual inspection of the trailer and weight distributing hitch to confirm manufacturers' recommendations have been met.

Measurement Example	Example 2500/3500 Height (mm)
H1	1030
H2	1058
H2-H1	28
(H2-H1)/2	14
(H2-H1)/2 + H1	1044

NOTE:
For all towing conditions, we recommend towing with tow haul mode engaged.

Towing With All Other 2500/3500 (Non-Air Suspension)

1. Position the truck to be ready to connect to the trailer (do not connect the trailer).
2. Measure the height of the top of the front wheel opening on the fender to ground, this is height H1.
3. Attach the trailer to the vehicle without the weight distribution bars connected.
4. Measure the height of the top of the front wheel opening on the fender to ground, this is height H2.
5. Install and adjust the tension in the weight distributing bars per the manufacturers' recommendations so that the height of the front fender is approximately (H2-H1)/2+H1 (about 1/2 the difference between H2 and H1 above normal ride height [H1]).
6. Perform a visual inspection of the trailer and weight distributing hitch to confirm manufacturers' recommendations have been met.

Measurement Example	Example 2500/3500 Height (mm)
H1	1030
H2	1058
H2-H1	28
(H2-H1)/2	14
(H2-H1)/2 + H1	1044

NOTE:
For all towing conditions, we recommend towing with tow haul mode engaged.

Fifth-Wheel Hitch

The fifth-wheel hitch is a special high platform with a coupling that mounts over the rear axle of the tow vehicle in the truck bed. It connects a vehicle and fifth-wheel trailer with a coupling king pin.

Your truck may be equipped with a 5th wheel hitch option. Refer to the separately provided 5th wheel hitch safety, care, assembly, and operating instructions.

Gooseneck Hitch

The gooseneck hitch employs a pivoted coupling arm which attaches to a ball mounted in the bed of a pickup truck. The coupling arm connects to the hitch mounted over the rear axle in the truck bed.

Trailer Hitch Type and Maximum Trailer Weight

The following chart provides the maximum trailer weight a given factory equipped trailer hitch type can tow and should be used to assist you in selecting the correct trailer hitch for your intended towing condition.

Trailer Hitch Type and Maximum Trailer Weight	
Hitch Type	**Max. Trailer Weight / Max. Tongue Weight**
Class V - 2500 Models	20,000 lbs (9,071 kg) / 2000 lbs (907 kg)
Class V - 3500 Models	23,000 lbs (10,432 kg) / 2300 lbs (1043 kg)
Fifth Wheel - 2500 Models	25,000 lbs (11,339 kg) / 2500 lbs (1,133 kg)
Fifth Wheel - 3500 Models	30,000 lbs (13,607 kg) / 3000 lbs (1,360 kg)
Gooseneck - 2500 Models	20,000 lbs (9,071 kg) / 2000 lbs (907 kg)
Gooseneck - 3500 Models	35,000 lbs (15,875 kg) / 3500 lbs (1,587 kg)
Refer to the “Trailer Towing Weights (Maximum Trailer Weight Ratings)” for the Maximum Gross Trailer Weight (GTW) towable for your given drivetrain.	

All trailer hitches should be professionally installed on your vehicle.

Trailer Towing Weights (Maximum Trailer Weight Ratings)

NOTE:
For trailer towing information (maximum trailer weight ratings) refer to the following website addresses:

- ramtrucks.com/en/towing_guide/
- ramtruck.ca (Canada)
- rambodybuilder.com

Trailer And Tongue Weight

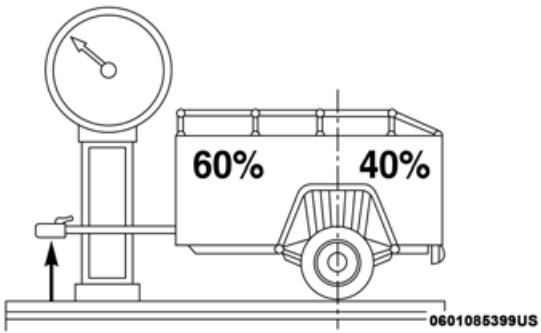

Weight Distribution

Consider the following items when computing the weight on the rear axle of the vehicle:

- The tongue weight of the trailer.
- The weight of any other type of cargo or equipment put in or on your vehicle.
- The weight of the driver and all passengers.

NOTE:
Remember that everything put into or on the trailer adds to the load on your vehicle. Also, additional factory-installed options or dealer-installed options must be considered as part of the total load on your vehicle. Refer to the "Tire And Loading Information" placard for the maximum combined weight of occupants and cargo for your vehicle.

Towing Requirements

To promote proper break-in of your new vehicle drivetrain components, the following guidelines are recommended.

CAUTION!
• **Do not tow a trailer at all during the first 500 miles (805 km) the new vehicle is driven. The engine, axle or other parts could be damaged.**

(Continued)

CAUTION! *(Continued)*

- **Then, during the first 500 miles (805 km) that a trailer is towed, do not drive over 50 mph (80 km/h) and do not make starts at full throttle. This helps the engine and other parts of the vehicle wear in at the heavier loads.**

Perform the maintenance listed in the "Scheduled Servicing". Refer to "Scheduled Servicing" in "Servicing And Maintenance" for the proper maintenance intervals. When towing a trailer, never exceed the GAWR or GCWR ratings.

WARNING!

- **Make certain that the load is secured in the trailer and will not shift during travel. When trailering cargo that is not fully secured, dynamic load shifts can occur that may be difficult for the driver to control. You could lose control of your vehicle and have a collision.**
- **When hauling cargo or towing a trailer, do not overload your vehicle or trailer. Overloading can cause a loss of control, poor performance or damage to brakes, axle, engine, transmission, steering, suspension, chassis structure or tires.**

(Continued)

WARNING! *(Continued)*

- **Safety chains must always be used between your vehicle and trailer. Always connect the chains to the hook retainers of the vehicle hitch. Cross the chains under the trailer tongue and allow enough slack for turning corners.**
- **Vehicles with trailers should not be parked on a grade. When parking, apply the parking brake on the tow vehicle. Put the tow vehicle transmission in PARK. For four-wheel drive vehicles, make sure the transfer case is not in NEUTRAL. Always, block or "chock" the trailer wheels.**
- **GCWR must not be exceeded.**
- **Total weight must be distributed between the tow vehicle and the trailer such that the following four ratings are not exceeded:**
  1. **GVWR**
  2. **GTW**
  3. **GAWR**
  4. **Tongue weight rating for the trailer hitch utilized.**

Towing Requirements — Tires

- Do not attempt to tow a trailer while using a compact spare tire.
- Do not drive more than 50 mph (80 km/h) when towing while using a full size spare tire.
- Proper tire inflation pressures are essential to the safe and satisfactory operation of your vehicle. Refer to "Tires" in "Servicing And Maintenance" for proper tire inflation procedures.
- Check the trailer tires for proper tire inflation pressures before trailer usage.
- Check for signs of tire wear or visible tire damage before towing a trailer. Refer to "Tires" in "Servicing And Maintenance" for the proper inspection procedure.
- When replacing tires, refer to "Tires" in "Servicing And Maintenance" for the proper tire replacement procedures. Replacing tires with a higher load carrying capacity will not increase the vehicle's GVWR and GAWR limits.

Towing Requirements — Trailer Brakes

- Do **not** interconnect the hydraulic brake system or vacuum system of your vehicle with that of the trailer. This could cause inadequate braking and possible personal injury.
- An electronically actuated trailer brake controller is required when towing a trailer with electronically actuated brakes. When towing a trailer equipped with a hydraulic surge actuated brake system, an electronic brake controller is not required.
- Trailer brakes are recommended for trailers over 1,000 lbs (453 kg) and required for trailers in excess of 2,000 lbs (907 kg).

WARNING!

- **Do not connect trailer brakes to your vehicle's hydraulic brake lines. It can overload your brake system and cause it to fail. You might not have brakes when you need them and could have an accident.**
- **Towing any trailer will increase your stopping distance. When towing, you should allow for additional space between your vehicle and the vehicle in front of you. Failure to do so could result in an accident.**

CAUTION!
If the trailer weighs more than 1,000 lbs (453 kg) loaded, it should have its own brakes and they should be of adequate capacity. Failure to do this could lead to accelerated brake lining wear, higher brake pedal effort, and longer stopping distances.

Integrated Trailer Brake Module — If Equipped

Your vehicle may have an Integrated Trailer Brake Module (ITBM) for Electric and Electric Over Hydraulic (EOH) trailer brakes.

NOTE:
This module has been designed and verified with electric trailer brakes and new electric over hydraulic systems. Some previous EOH systems may not be compatible with ITBM.

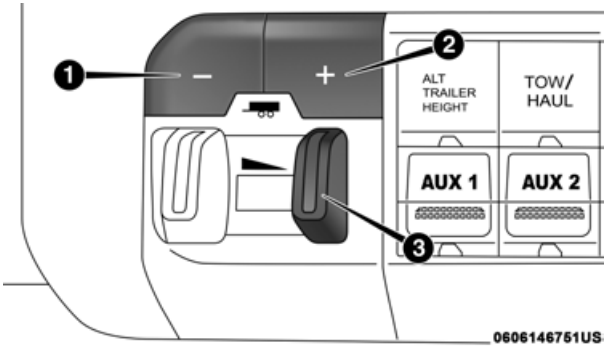

Integrated Trailer Brake Module (ITBM)
1 — GAIN Adjustment Button
2 — GAIN Adjustment Button
3 — Manual Brake Control Lever

The user interface consists of the following:

Manual Brake Control Lever

Slide the manual brake control lever to the left to activate power to the trailer's electric brakes independent of the tow vehicle's brakes. If the manual brake control lever is activated while the brake is also applied, the greater of the two inputs determines the power sent to the trailer brakes.

The trailer and the vehicle's stop lamps will come on when braking normally with the vehicle brake pedal. Only the trailer stop lamps will come on when the manual brake control lever is applied.

Trailer Brake Status Indicator Light

This light indicates the trailer electrical connection status.

If no electrical connection is detected after the ignition is turned on, pushing the GAIN adjustment button or sliding the manual brake control lever will display the GAIN setting for 10 seconds and the "Trailer Brake Status Indicator Light" will not be displayed.

If a fault is detected in the trailer wiring or the Integrated Trailer Brake Module (ITBM), the "Trailer Brake Status Indicator Light" will flash.

GAIN Adjustment Buttons (+/-)

Pushing these buttons will adjust the brake control power output to the trailer brakes in 0.5 increments. The GAIN setting can be increased to a maximum of 10 or decreased to a minimum of 0 (no trailer braking).

GAIN

The GAIN setting is used to set the trailer brake control for the specific towing condition and should be changed as towing conditions change. Changes to towing conditions include trailer load, vehicle load, road conditions and weather.

Adjusting GAIN

NOTE:
This should only be performed in a traffic free environment at speeds of approximately 20–25 mph (30–40 km/h).

1. Make sure the trailer brakes are in good working condition, functioning normally and properly adjusted. See your trailer dealer if necessary.
2. Hook up the trailer and make the electrical connections according to the trailer manufacturer's instructions.
3. When a trailer with electric/EOH brakes is plugged in, the trailer connected message should appear in the instrument cluster display (if the connection is not recognized by the ITBM, braking functions will not be available), the GAIN setting will illuminate and the correct type of trailer must be selected from the instrument cluster display options.

4. Push the UP or DOWN button on the steering wheel until "TRAILER TOW" appears on the screen.
5. Push the RIGHT arrow on the steering wheel to enter "TRAILER TOW".
6. Push the UP or DOWN buttons until the Trailer Brake Type appears on the screen.
7. Push the RIGHT arrow and then push the UP or DOWN buttons until the proper Trailer Brake Type appears on the screen.
8. In a traffic-free environment, tow the trailer on a dry, level surface at a speed of 20–25 mph (30–40 km/h) and squeeze the manual brake control lever completely.
9. If the trailer wheels lockup (indicated by squealing tires), reduce the GAIN setting; if the trailer wheels turn freely, increase the GAIN setting.

Repeat steps 8 and 9 until the GAIN setting is at a point just below trailer wheel lockup. If towing a heavier trailer, trailer wheel lockup may not be attainable even with the maximum GAIN setting of 10.

	Light Electric	Heavy Electric	Light EOH	Heavy EOH
Type of Trailer Brakes	Electric Trailer Brakes	Electric Trailer Brakes	Electric over Hydraulic Trailer Brakes	Electric over Hydraulic Trailer Brakes
Load	*Under 10,000 lbs	*Above 10,000 lbs	*Under 10,000 lbs	*Above 10,000 lbs

* The suggested selection depends and may change depending on the customer preferences for braking performance. Condition of the trailer brakes, driving and road state may also affect the selection.

Display Messages

The trailer brake control interacts with the instrument cluster display. Display messages, along with a single chime, will be displayed when a malfunction is determined in the trailer connection, trailer brake control, or on the trailer. Refer to "Instrument Cluster Display" in "Getting To Know Your Instrument Panel" for further information.

WARNING!
Connecting a trailer that is not compatible with the ITBM system may result in reduced or complete loss of trailer braking. There may be a increase in stopping distance or trailer instability which could result in personal injury.

CAUTION!
Connecting a trailer that is not compatible with the ITBM system may result in reduced or complete loss of trailer braking. There may be a increase in stopping distance or trailer instability which could result in damage to your vehicle, trailer, or other property.

NOTE:

- An aftermarket controller may be available for use with trailers with air or electric-over-hydraulic trailer brake systems. To determine the type of brakes on your trailer and the availability of controllers, check with your trailer manufacturer or dealer.
- Removal of the ITBM will cause errors and it may cause damage to the electrical system and electronic modules of the vehicle. See your authorized dealer if an aftermarket module is to be installed.

Towing Requirements — Trailer Lights And Wiring

Whenever you pull a trailer, regardless of the trailer size, stoplights and turn signals on the trailer are required for motoring safety.

The Trailer Tow Package may include a four- and seven-pin wiring harness. Use a factory approved trailer harness and connector.

NOTE:
Do not cut or splice wiring into the vehicle's wiring harness.

The electrical connections are all complete to the vehicle but you must mate the harness to a trailer connector. Refer to the following illustrations.

NOTE:

- Disconnect trailer wiring connector from the vehicle before launching a boat (or any other device plugged into vehicle's electrical connect) into water.
- Be sure to reconnect once clear from water area.

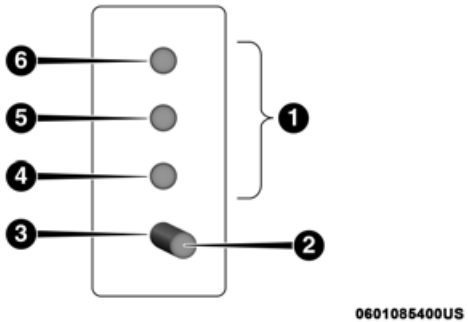

Four-Pin Connector

1 — Female Pins	4 — Park
2 — Male Pin	5 — Left Stop/Turn
3 — Ground	6 — Right Stop/Turn

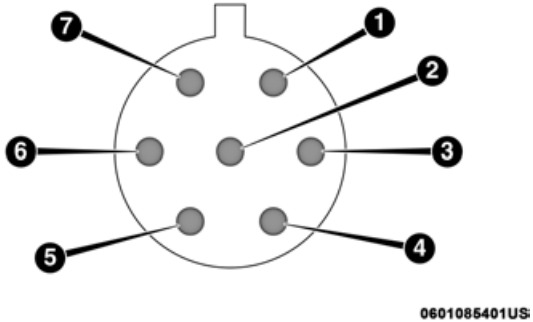

Seven-Pin Connector

1 — Battery	5 — Ground
2 — Backup Lamps	6 — Left Stop/Turn
3 — Right Stop/Turn	7 — Running Lamps
4 — Electric Brakes	

Towing Tips

Before setting out on a trip, practice turning, stopping, and backing up the trailer in an area located away from heavy traffic.

Automatic Transmission

The DRIVE range can be selected when towing. The transmission controls include a drive strategy to avoid frequent shifting when towing. However, if frequent shifting does occur while in DRIVE, select TOW/HAUL mode or select a lower gear range (using the Electronic Range Select (ERS) shift control).

NOTE:
Using TOW/HAUL mode or selecting a lower gear range (using the ERS shift control) while operating the vehicle under heavy loading conditions will improve performance and extend transmission life by reducing excessive shifting and heat build up. This action will also provide better engine braking.

Tow/Haul Mode

To reduce potential for automatic transmission overheating, activate TOW/HAUL mode when driving in hilly areas, or select a lower gear range (using the Electronic Range Select (ERS) shift control) on more severe grades.

Speed Control — If Equipped

- Do not use on hilly terrain or with heavy loads.
- When using the speed control, if you experience speed drops greater than 10 mph (16 km/h), disengage until you can get back to cruising speed.
- Use speed control in flat terrain and with light loads to maximize fuel efficiency.

Cooling System

To reduce potential for engine and transmission overheating, take the following actions:

City Driving

- In city traffic — while stopped, place the transmission in NEUTRAL, but do not increase engine idle speed.

Highway Driving

- Reduce speed.
- Temporarily turn off air conditioning.

Air Suspension System

To aid in attaching/detaching the trailer from the vehicle, the air suspension system can be used. Refer to "Air Suspension System" in "Starting And Operating" for further information.

NOTE:
The vehicle must remain in the engine running position while attaching a trailer for proper leveling of the air suspension system.

SNOWPLOW

2500/3500 Models Only

Snowplow Prep Packages are available as a factory installed option. These packages include components necessary to equip your vehicle with a snowplow.

NOTE:
Before installation of a snowplow it is highly recommended that the owner/installer obtain and follow the recommendations contained within the current Body Builders Guide. See your authorized dealer, installer or snowplow manufacturer for this information. There are unique electrical systems that must be connected to properly assure operator safety and prevent overloading vehicle systems.

WARNING!
Attaching a snowplow to this vehicle could adversely affect performance of the airbag system in a collision. Do not expect that the airbag will perform as described earlier in this manual.

CAUTION!
The "Lamp Out" indicator could illuminate if exterior lamps are not properly installed.

Before Plowing

- Check the hydraulic system for leaks and proper fluid level.
- Check the mounting bolts and nuts for proper tightness.
- Check the runners and cutting edge for excessive wear. The cutting edge should be ¼ to ½ in (6 cm to 1.2 cm) above ground in snow plowing position.
- Check that snowplow lighting is connected and functioning properly.

Snowplow Prep Package Model Availability

For Information about snowplow applications visit www.ramtrucks.com or refer to the current Body Builders Guide.

1. The maximum number of occupants in the truck should not exceed two.
2. The total GVWR or the Front GAWR or the Rear GAWR should never be exceeded.
3. Cargo capacity will be reduced by the addition of options or passengers, etc.

The loaded vehicle weight, including the snowplow system, all aftermarket accessories, driver, passengers, options, and cargo, must not exceed either the Gross Vehicle Weight (GVWR) or Gross Axle Weight (GAWR) ratings. These weights are specified on the Safety Compliance Certification Label on the driver's side door opening.

NOTE:
Detach the snowplow when transporting passengers.

Vehicle front end wheel alignment was set to specifications at the factory without consideration for the weight of the plow. Front end toe-in should be checked and reset if necessary at the beginning and end of the snowplow season. This will help prevent uneven tire wear.

The blade should be lowered whenever the vehicle is parked.

Maintain and operate your vehicle and snowplow equipment following the recommendations provided by the specific snowplow manufacturer.

Over The Road Operation With Snowplow Attached

The blade restricts air flow to the radiator and causes the engine to operate at higher than normal temperatures. Therefore, when transporting the plow, angle the blade completely and position it as low as road or surface conditions permit. Do not exceed 40 mph (64 km/h). The operator should always maintain a safe stopping distance and allow adequate passing clearance.

Operating Tips

Under ideal snow plowing conditions, 20 mph (32 km/h) should be maximum operating speed. The operator should be familiar with the area and surface to be cleaned. Reduce speed and use extreme caution when plowing unfamiliar areas or under poor visibility.

General Maintenance

Snowplows should be maintained in accordance with the plow manufacturer's instructions.

Keep all snowplow electrical connections and battery terminals clean and free of corrosion.

When plowing snow, to avoid transmission and drivetrain damage, the following precautions should be observed.

- Operate with transfer case in 4LO when plowing small or congested areas where speeds are not likely to exceed 15 mph (24 km/h). At higher speeds operate in 4HI.
- Vehicles with automatic transmissions should use 4LO range when plowing deep or heavy snow for extended periods of time to avoid transmission overheating.
- Do not shift the transmission unless the engine has returned to idle and wheels have stopped. Make a practice of stepping on the brake pedal while shifting the transmission.

RECREATIONAL TOWING (BEHIND MOTORHOME, ETC.)

Towing This Vehicle Behind Another Vehicle

Towing Condition	Wheels OFF The Ground	Two-Wheel Drive Models	Four-Wheel Drive Models
Flat Tow	NONE	**NOT ALLOWED**	**See Instructions** • Automatic transmission in PARK • Transfer case in NEUTRAL (N) • Tow in forward direction
Dolly Tow	Front	**NOT ALLOWED**	**NOT ALLOWED**
	Rear	OK	**NOT ALLOWED**
On Trailer	ALL	OK	OK

NOTE:

- When towing your vehicle, always follow applicable state and provincial laws. Contact state and provincial Highway Safety offices for additional details.
- Vehicles equipped with air suspension must be placed in Transport mode before tying them down (from the body) on a trailer or flatbed truck. Refer to “Air Suspension – If Equipped” for more information. If the vehicle cannot be placed in Transport mode (for example, engine will not run), tie-downs must be fastened to the axles (not to the body). Failure to follow these instructions may cause fault codes to be set and/or cause loss of proper tie-down tension.

Recreational Towing — Two-Wheel Drive Models

DO NOT flat tow this vehicle. Damage to the drivetrain will result.

Recreational towing (for two-wheel drive models) is allowed **ONLY** if the rear wheels are **OFF** the ground. This may be accomplished using a tow dolly or vehicle trailer. If using a tow dolly, follow this procedure:

NOTE:
If vehicle is equipped with air suspension, ensure the vehicle is set to Normal Ride Height.

1. Properly secure the dolly to the tow vehicle, following the dolly manufacturer's instructions.
2. Drive the rear wheels onto the tow dolly.
3. Firmly apply the parking brake. Place automatic transmission in PARK.
4. Properly secure the rear wheels to the dolly, following the dolly manufacturer's instructions.
5. Turn the ignition OFF and remove the key fob.
6. Install a suitable clamping device, designed for towing, to secure the front wheels in the straight position.

CAUTION!

- **Towing with the rear wheels on the ground will cause severe transmission damage. Damage from improper towing is not covered under the New Vehicle Limited Warranty.**
- **Do not disconnect the driveshaft because fluid may leak from the transmission, causing damage to internal parts.**

Recreational Towing — Four-Wheel Drive Models

NOTE:
Both the manual shift and electronic shift transfer cases must be shifted into NEUTRAL (N) for recreational towing. Automatic transmissions must be shifted into PARK for recreational towing. Refer to the following for the proper transfer case NEUTRAL (N) shifting procedure for your vehicle.

CAUTION!

- **DO NOT dolly tow any 4WD vehicle. Towing with only one set of wheels on the ground (front or rear) will cause severe transmission and/or transfer case damage. Tow with all four wheels either ON the ground, or OFF the ground (using a vehicle trailer).**
- **Tow only in the forward direction. Towing this vehicle backwards can cause severe damage to the transfer case.**
- **Before recreational towing, the transfer case must be in NEUTRAL. To be certain the transfer case is fully in NEUTRAL, perform the procedure outlined under "Shifting Into NEUTRAL". Internal transmission damage will result, if the transfer case is not in NEUTRAL during towing.**
- **The transmission must be placed in PARK for recreational towing.**

(Continued)

CAUTION! *(Continued)*

- **Towing this vehicle in violation of the above requirements can cause severe transmission and/or transfer case damage. Damage from improper towing is not covered under the New Vehicle Limited Warranty.**
- **Do not disconnect the rear driveshaft because fluid will leak from the transfer case, causing damage to internal parts.**
- **Do not use a bumper-mounted clamp-on tow bar on your vehicle. The bumper face bar will be damaged.**

Shifting Into NEUTRAL (N)

Use the following procedure to prepare your vehicle for recreational towing.

WARNING!
You or others could be injured or killed if you leave the vehicle unattended with the transfer case in the NEUTRAL (N) position without first fully engaging the parking brake. The transfer case NEUTRAL (N) position disengages both the front and rear driveshafts from the powertrain, and will allow the vehicle to roll, even if the automatic transmission is in PARK. The parking brake should always be applied when the driver is not in the vehicle.

CAUTION!
It is necessary to follow these steps to be certain that the transfer case is fully in NEUTRAL (N) before recreational towing to prevent damage to internal parts.

1. Bring the vehicle to a complete stop on level ground, with the engine running. Firmly apply the parking brake.
2. Shift the transmission to NEUTRAL.

NOTE:
If vehicle is equipped with air suspension, ensure the vehicle is set to Normal Ride Height.

3. Press and hold the brake pedal.
4. Shift the transfer case into NEUTRAL:
   - With manual shift transfer case, shift the transfer case lever into NEUTRAL (N)
   - With electronic shift transfer case, push and hold the transfer case NEUTRAL (N) button. Some models have a small, recessed "N" button (at the center of the transfer case switches) that must be pushed using a ballpoint pen or similar object. Other models have a rectangular NEUTRAL switch, below the rotary transfer case control knob. The NEUTRAL (N) indicator light will blink while the shift is in progress. The light will stop blinking (stay on solid) when the shift to NEUTRAL (N) is complete. After the shift is completed and the NEUTRAL (N) light stays on, release the NEUTRAL (N) button.
5. Release the parking brake.
6. Shift the transmission into REVERSE.

7. Release the brake pedal for five seconds and ensure that there is no vehicle movement.

8. Repeat steps 6 and 7 with automatic transmission in DRIVE.

9. Shift the transmission to NEUTRAL. Firmly apply the parking brake. Turn OFF the engine. For vehicles with Keyless Enter-N-Go, push and hold the ENGINE START/STOP button until the engine shuts off.

10. Shift the transmission into PARK. On 8-speed transmissions the shifter will automatically select PARK when the engine is turned off.

11. Turn the ignition to the OFF mode, then cycle the ignition to the RUN mode and back to the OFF mode. Remove the key fob from the ignition.

12. Attach the vehicle to the tow vehicle using a suitable tow bar.

13. Release the parking brake.

NOTE:
With electronic shift transfer case:

- Steps 2 through 3 are requirements that must be met before pushing the NEUTRAL (N) button, and must continue to be met until the shift has been completed. If any of these requirements are not met before pushing the NEUTRAL (N) button or are no longer met during the shift, the NEUTRAL (N) indicator light will flash continuously until all requirements are met or until the NEUTRAL (N) button is released.
- The ignition must be in the ON/RUN mode for a shift to take place and for the position indicator lights to be operable. If the ignition is not in the ON/RUN mode, the shift will not take place and no position indicator lights will be on or flashing.
- A flashing NEUTRAL (N) position indicator light indicates that shift requirements have not been met.
- If the vehicle is equipped with air suspension, the engine should be started and left running for a minimum of 60 seconds (with all the doors closed) at least once every 24 hours. This process allows the air suspension to adjust the vehicle's ride height to compensate for temperature effects.

Shifting Out Of NEUTRAL (N)

Use the following procedure to prepare your vehicle for normal usage:

1. Bring the vehicle to a complete stop, leaving it connected to the tow vehicle.
2. Firmly apply the parking brake.
3. Press and hold the brake pedal.
4. Start the engine. Shift the transmission into NEUTRAL.
   - With manual shift transfer case, shift the transfer case lever to the desired position.
   - With electronic shift transfer case with rotary selector switch, push and hold the transfer case NEUTRAL (N) button until the NEUTRAL (N) indicator light turns off. After the NEUTRAL (N) indicator light turns off, release the NEUTRAL (N) button. After the NEUTRAL (N) button has been released, the transfer case will shift to the position indicated by the selector switch.
   - With electronic shift transfer case with push-button selector switch, push and hold the switch for the desired transfer case position, until the NEUTRAL (N) indicator light turns off and the desired position indicator light turns on.

NOTE:
When shifting out of transfer case NEUTRAL (N), turning the engine OFF is not required, but may be helpful to avoid gear clash. With the 8-speed automatic transmission, the engine must remain running, since turning the engine OFF will shift the transmission to PARK (and the transmission must be in NEUTRAL for the transfer case to shift out of NEUTRAL).

5. Turn the engine OFF. Shift automatic transmission into PARK. On 8-speed transmissions the shifter will automatically select PARK when the engine is turned off.
6. Release the brake pedal.
7. Disconnect vehicle from the tow vehicle.
8. Start the engine.
9. Press and hold the brake pedal.

10. Release the parking brake.

11. Shift the transmission into gear, release the brake pedal, and check that the vehicle operates normally.

NOTE:
With electronic shift transfer case:

- Steps 3 and 4 are requirements that must be met before pushing the button to shift out of NEUTRAL (N), and must continue to be met until the shift has been completed. If any of these requirements are not met before pushing the button or are no longer met during the shift, the NEUTRAL (N) indicator light will flash continuously until all requirements are met or until the button is released.
- The ignition must be in the ON/RUN mode for a shift to take place and for the position indicator lights to be operable. If the ignition is not in the ON/RUN mode, the shift will not take place and no position indicator lights will be on or flashing.
- A flashing NEUTRAL (N) position indicator light indicates that shift requirements have not been met.

DRIVING TIPS

Driving On Slippery Surfaces

Acceleration

Rapid acceleration on snow covered, wet, or other slippery surfaces may cause the driving wheels to pull erratically to the right or left. This phenomenon occurs when there is a difference in the surface traction under the rear (driving) wheels.

WARNING!
Rapid acceleration on slippery surfaces is dangerous. Unequal traction can cause sudden pulling of the rear wheels. You could lose control of the vehicle and possibly have a collision. Accelerate slowly and carefully whenever there is likely to be poor traction (ice, snow, wet, mud, loose sand, etc.).

Driving Through Water

Driving through water more than a few inches/centimeters deep will require extra caution to ensure safety and prevent damage to your vehicle.

Flowing/Rising Water

WARNING!

Do not drive on or across a road or path where water is flowing and/or rising (as in storm run-off). Flowing water can wear away the road or path's surface and cause your vehicle to sink into deeper water. Furthermore, flowing and/or rising water can carry your vehicle away swiftly. Failure to follow this warning may result in injuries that are serious or fatal to you, your passengers, and others around you.

Shallow Standing Water

Although your vehicle is capable of driving through shallow standing water, consider the following Cautions and Warnings before doing so.

WARNING!

- **Driving through standing water limits your vehicle's traction capabilities. Do not exceed 5 mph (8 km/h) when driving through standing water.**
- **Driving through standing water limits your vehicle's braking capabilities, which increases stopping distances. Therefore, after driving through standing water, drive slowly and lightly press on the brake pedal several times to dry the brakes.**
- **Failure to follow these warnings may result in injuries that are serious or fatal to you, your passengers, and others around you.**

CAUTION!

- **Always check the depth of the standing water before driving through it. Never drive through standing water that is deeper than the bottom of the tire rims mounted on the vehicle.**
- **Determine the condition of the road or the path that is under water and if there are any obstacles in the way before driving through the standing water.**
- **Do not exceed 5 mph (8 km/h) when driving through standing water. This will minimize wave effects.**

(Continued)

CAUTION! *(Continued)*

- **Driving through standing water may cause damage to your vehicle's drivetrain components. Always inspect your vehicle's fluids (i.e., engine oil, transmission, axle, etc.) for signs of contamination (i.e., fluid that is milky or foamy in appearance) after driving through standing water. Do not continue to operate the vehicle if any fluid appears contaminated, as this may result in further damage. Such damage is not covered by the New Vehicle Limited Warranty.**
- **Getting water inside your vehicle's engine can cause it to lock up and stall out, and cause serious internal damage to the engine. Such damage is not covered by the New Vehicle Limited Warranty.**

Off-Road Driving Tips

Care should be taken when attempting to climb steep hills or driving diagonally across a hill or slope. If natural obstacles force you to travel diagonally up or down a hill, choose a mild angle and keep as little side tilt as possible. Keep the vehicle moving and make turns slowly and cautiously.

If you must back down a hill, back straight down using REVERSE gear. Never back down in NEUTRAL or diagonally across the hill.

When driving over sand, mud, and other soft terrain, shift to low gear and drive steadily. Apply the accelerator slowly to avoid spinning the wheels.

Do not reduce the tire pressures for this type of driving.

After Driving Off-Road

Off-road operation puts more stress on your vehicle than does most on-road driving. After going off-road, it is always a good idea to check for damage. That way you can get any problems taken care of right away and have your vehicle ready when you need it.

- Completely inspect the underbody of your vehicle. Check tires, body structure, steering, suspension, and exhaust system for damage.
- Inspect the radiator for mud and debris and clean as required.
- Check threaded fasteners for looseness, particularly on the chassis, drivetrain components, steering, and suspension. Retighten them, if required, and torque to the values specified in the Service Manual.
- Check for accumulations of plants or brush. These things could be a fire hazard. They might hide damage to fuel lines, brake hoses, axle pinion seals, and propeller shafts.
- After extended operation in mud, sand, water, or similar dirty conditions, have the radiator, fan, brake rotors, wheels, brake linings, and axle yokes inspected and cleaned as soon as possible.

WARNING!
Abrasive material in any part of the brakes may cause excessive wear or unpredictable braking. You might not have full braking power when you need it to prevent a collision. If you have been operating your vehicle in dirty conditions, get your brakes checked and cleaned as necessary.

- If you experience unusual vibration after driving in mud, slush or similar conditions, check the wheels for impacted material. Impacted material can cause a wheel imbalance and freeing the wheels of it will correct the situation.

IN CASE OF EMERGENCY

HAZARD WARNING FLASHERS

The Hazard Warning switch is located on the upper switch bank just below the radio.

NOTE:
If your vehicle is equipped with a 12–inch Uconnect display, the Hazard Warning switch is located above the display.

Push the switch to turn on the Hazard Warning flasher. When the switch is activated, all directional turn signals will flash on and off to warn oncoming traffic of an emergency. Push the switch a second time to turn off the Hazard Warning flashers.

This is an emergency warning system and it should not be used when the vehicle is in motion. Use it when your vehicle is disabled and it is creating a safety hazard for other motorists.

When you must leave the vehicle to seek assistance, the Hazard Warning flashers will continue to operate even though the ignition is placed in the OFF position.

NOTE:
With extended use the Hazard Warning flashers may wear down your battery.

ASSIST AND SOS SYSTEM — IF EQUIPPED

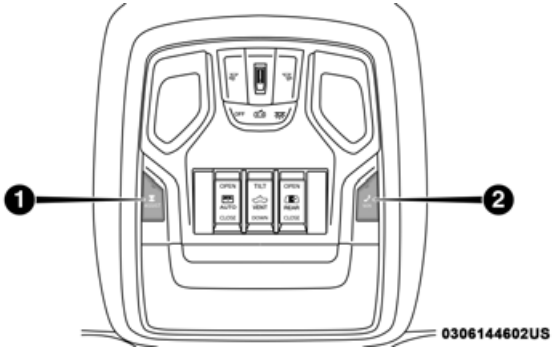

Assist And SOS Buttons

1 — ASSIST Button
2 — SOS Button

If equipped, the overhead console contains an ASSIST and a SOS button.

WARNING!
ALWAYS obey traffic laws and pay attention to the road. ALWAYS drive safely with your hands on the steering wheel. You have full responsibility and assume all risks related to the use of the features and applications in this vehicle. Only use the features and applications when it is safe to do so. Failure to do so may result in an accident involving serious injury or death.

NOTE:

- Your vehicle may be transmitting data as authorized by the subscriber.
- The SOS and ASSIST buttons will only function if you are connected to an operable LTE (voice/data) or 4G (data) network. Other Uconnect services will only be operable if your SiriusXM Guardian™ service is active and you are connected to an operable LTE (voice/data) or 4G (data) network.

ASSIST Call

The ASSIST Button is used to automatically connect you to any one of the following support centers:

- Roadside Assistance – If you get a flat tire, or need a tow, just push the ASSIST button and you'll be connected to someone who can help. Roadside Assistance will know what vehicle you're driving and its location. Additional fees may apply for roadside assistance.
- SiriusXM Guardian™ Customer Care – In-vehicle support for SiriusXM Guardian™.
- Vehicle Customer Care – Total support for all other vehicle issues.

SOS Call

1. Push the SOS Call button on the overhead console.

NOTE:
In case the SOS Call button is pushed in error, there will be a ten second delay before the SOS Call system initiates a call to a SOS operator. To cancel the SOS Call connection, push the SOS call button on the overhead console or press the cancellation button on the Device Screen. Termination of the SOS Call will turn off the green LED light on the overhead console.

2. The LED light located between the ASSIST and SOS buttons on the overhead console will turn green once a connection to a SOS operator has been made.
3. Once a connection between the vehicle and a SOS operator is made, the SOS Call system may transmit the following important vehicle information to a SOS operator:
   - Indication that the occupant placed a SOS Call.
   - The vehicle brand.
   - The last known GPS coordinates of the vehicle.
4. You should be able to speak with the SOS operator through the vehicle audio system to determine if additional help is needed.

WARNING!
ALWAYS obey traffic laws and pay attention to the road. ALWAYS drive safely with your hands on the steering wheel. You have full responsibility and assume all risks related to the use of the features and applications in this vehicle. Only use the features and applications when it is safe to do so. Failure to do so may result in an accident involving serious injury or death.

NOTE:

- Your vehicle may be transmitting data as authorized by the subscriber.
- Once a connection is made between the vehicle's SOS Call system and the SOS operator, the SOS operator may be able to open a voice connection with the vehicle to determine if additional help is needed. Once the SOS operator opens a voice connection with the vehicle's SOS Call system, the operator should be able to speak with you or other vehicle occupants and hear sounds occurring in the vehicle. The vehicle's SOS Call system will attempt to remain connected with the SOS operator until the SOS operator terminates the connection.

5. The SOS operator may attempt to contact appropriate emergency responders and provide them with important vehicle information and GPS coordinates.

WARNING!

- **If anyone in the vehicle could be in danger (e.g., fire or smoke is visible, dangerous road conditions or location), do not wait for voice contact from an Emergency Services Agent. All occupants should exit the vehicle immediately and move to a safe location.**

(Continued)

WARNING! *(Continued)*

- **Never place anything on or near the vehicle's operable network and GPS antennas. You could prevent operable network and GPS signal reception, which can prevent your vehicle from placing an emergency call. An operable network and GPS signal reception is required for the SOS Call system to function properly.**
- **The SOS Call system is embedded into the vehicle's electrical system. Do not add aftermarket electrical equipment to the vehicle's electrical system. This may prevent your vehicle from sending a signal to initiate an emergency call. To avoid interference that can cause the SOS Call system to fail, never add aftermarket equipment (e.g., two-way mobile radio, CB radio, data recorder, etc.) to your vehicle's electrical system or modify the antennas on your vehicle. IF YOUR VEHICLE LOSES BATTERY POWER FOR ANY REASON (INCLUDING DURING OR AFTER AN ACCIDENT), THE UCONNECT FEATURES, APPS AND SERVICES, AMONG OTHERS, WILL NOT OPERATE.**
- **Modifications to any part of the SOS Call system could cause the air bag system to fail when you need it. You could be injured if the air bag system is not there to help protect you.**

SOS Call System Limitations

Vehicles sold in Mexico **DO NOT** have SOS Call system capabilities.

SOS or other emergency line operators in Mexico may not answer or respond to SOS system calls.

If the SOS Call system detects a malfunction, any of the following may occur at the time the malfunction is detected, and at the beginning of each ignition cycle:

- The overhead console light located between the ASSIST and SOS buttons will continuously be illuminated red.
- The Device Screen will display the following message: "Vehicle device requires service. Please contact your dealer."
- An In-Vehicle Audio message will state "Vehicle device requires service. Please contact your dealer."

WARNING!

- **Ignoring the overhead console light could mean you will not have SOS Call services. If the overhead console light is illuminated, have your authorized dealer service the SOS Call system immediately.**

(Continued)

WARNING! *(Continued)*

- **The Occupant Restraint Control module turns on the air bag Warning Light on the instrument panel if a malfunction in any part of the system is detected. If the Air Bag Warning Light is illuminated, have your authorized dealer service the Occupant Restraint Control system immediately.**

Even if the SOS Call system is fully functional, factors beyond FCA US LLC's control may prevent or stop the SOS Call system operation. These include, but are not limited to, the following factors:

- Delayed accessories mode is active.
- The ignition is in the OFF position.
- The vehicle's electrical systems are not intact.
- The SOS Call system software and/or hardware are damaged during a crash.
- The vehicle battery loses power or becomes disconnected during a vehicle crash.
- LTE (voice/data) or 4G (data) network and/or Global Positioning Satellite signals are unavailable or obstructed.

- Equipment malfunction at the SOS operator facility.
- Operator error by the SOS operator.
- LTE (voice/data) or 4G (data) network congestion.
- Weather.
- Buildings, structures, geographic terrain, or tunnels.

WARNING!
ALWAYS obey traffic laws and pay attention to the road. ALWAYS drive safely with your hands on the steering wheel. You have full responsibility and assume all risks related to the use of the features and applications in this vehicle. Only use the features and applications when it is safe to do so. Failure to do so may result in an accident involving serious injury or death.

NOTE:

- Your vehicle may be transmitting data as authorized by the subscriber.
- Never place anything on or near the vehicle's LTE (voice/data) or 4G (data) and GPS antennas. You could prevent LTE (voice/data) or 4G (data) and GPS signal reception, which can prevent your vehicle from placing an emergency call. An operable LTE (voice/data) or 4G (data) network connection and a GPS signal is required for the SOS Call system to function properly.

General Information

This device complies with Part 15 of the FCC Rules. Operation is subject to the following two conditions: (1) This device may not cause harmful interference, and (2) this device must accept any interference received, including interference that may cause undesired operation.

NOTE:
Changes or modifications not expressly approved by the party responsible for compliance could void the user's authority to operate the equipment.

BULB REPLACEMENT

Replacement Bulbs

All of the inside bulbs are brass or glass-wedge base. Aluminum base bulbs are not approved.

Interior Bulbs

	Bulb Number
Overhead Console Lamps	TS 212–9
Dome Lamp	7679
For lighted switches, see your authorized dealer for replacement instructions.	

Exterior Bulbs (Sheet 1 of 2)

	Bulb Number
Low Beam (Halogen Reflector Headlamp)	H11LL
High Beam (Halogen Reflector Headlamp)	9005LL
Low & High Beam (LED Reflector Headlamp)	LED (Serviced At An Authorized Dealer)
Low & High Beam (LED Projector Headlamp)	LED (Serviced At An Authorized Dealer)
Turn Signal / Front Position (Halogen Reflector Headlamp)	7444NA
Turn Signal / Front Position (LED Headlamps)	LED (Serviced at authorized dealer)
Front Side Marker (Halogen Reflector Headlamp)	W5W
Front Side Marker (LED Headlamps)	LED (Serviced At An Authorized Dealer)

Exterior Bulbs (Continued) (Sheet 2 of 2)

	Bulb Number
Front Fog Lamps (Halogen Reflector Headlamp)	H11LL
Front Fog Lamps (LED Headlamps)	LED (Serviced At An Authorized Dealer)
Side Indicators (Front And Side View Mirror)	LED (Serviced at authorized dealer)
Base Rear Tail/Turn and Stop Lamp	3157K
Premium Rear Tail/Turn and Stop Lamp	LED (Serviced At An Authorized Dealer)
Premium Backup Lamp	7440/W21W
Center High Mounted Stop Lamp (CHMSL)	921
Cab Roof Marker Lamps	194NA
Rear Lamp Bar ID Marker Lamp	194
Side Marker Lamps (Dual Rear Wheels)	194
Backup Lamp	921
Rear License Plate Lamp	194

Replacing Exterior Bulbs

Base Quad: Low Beam Headlamp, High Beam Headlamp, Front Park And Turn — If Equipped

Low Beam

1. Open the hood.
2. Disconnect and isolate the negative battery cable.
3. Reach into the front wheel house ahead of the front wheel, remove the fastener, and lift the cover over the access hole in the front of the wheel house splash shield. Access to the rear of the lamp can be gained through this access hole.

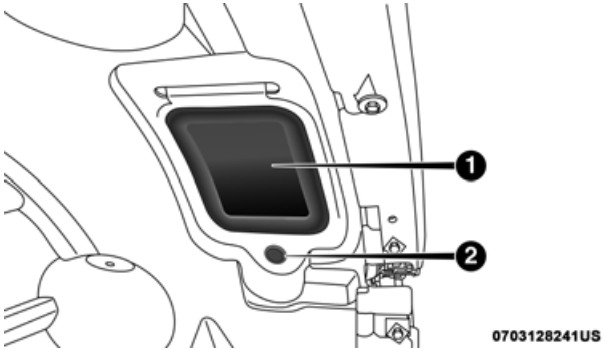

Splash Shield Access Cover

1 — Access Cover
2 — Fastener

4. Reach through the access hole of the wheel house splash shield and disengage the bulb access cover by rotating counterclockwise.

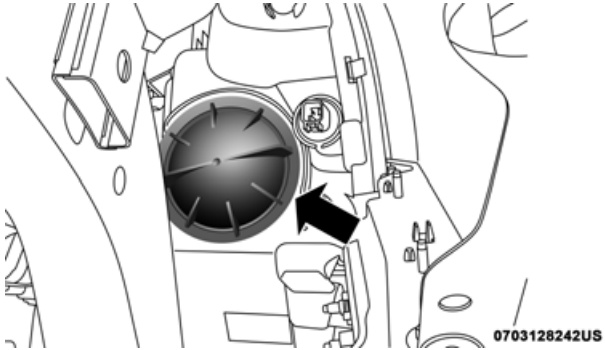

Bulb Access Cover

5. Disconnect the internal lamp wiring harness connector from the low beam bulb.

CAUTION!

- **Do not contaminate the bulb glass by touching it with your fingers or by allowing it to contact other oily surfaces. Shortened bulb life will result.**
- **Always use the correct bulb size and type for replacement. An incorrect bulb size or type may overheat and cause damage to the lamp, the bulb socket, or the lamp wiring.**

6. Rotate the bulb counterclockwise 1/4 turn to unlock the bulb from the lamp.
7. Pull the bulb straight out from the housing.
8. Reverse the procedure for installation of new bulb and covers.

High Beam

1. Open the hood.
2. Disconnect and isolate the negative battery cable.
3. Look under the hood and behind the headlamp to find the high beam bulb access cover.
4. Reach behind the headlamp and disengage the access cover by rotating counterclockwise.
5. Disconnect the internal lamp wiring harness connector from the high beam bulb.

CAUTION!
• **Do not contaminate the bulb glass by touching it with your fingers or by allowing it to contact other oily surfaces. Shortened bulb life will result.**

(Continued)

CAUTION! *(Continued)*
• **Always use the correct bulb size and type for replacement. An incorrect bulb size or type may overheat and cause damage to the lamp, the bulb socket, or the lamp wiring.**

6. Rotate the bulb counterclockwise 1/4 turn to unlock the bulb from the lamp.
7. Pull the bulb straight out from the housing.
8. Reverse the procedure for installation of new bulb and covers.

Front Park And Turn

1. Open the hood.
2. Disconnect and isolate the negative battery cable.
3. Look under the hood and behind the headlamp to find the park and turn socket.

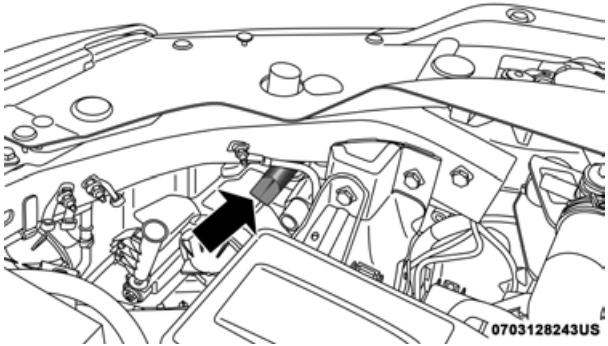

Park And Turn Socket

4. Reach behind the headlamp and unlock the park and turn socket from the lamp by rotating counterclockwise ¼ turn.
5. Pull the bulb straight out from the housing.
6. Separate the bulb from the socket without twisting.
7. Reverse the procedure for installation of new bulb and covers.

Side Marker Lamp

1. Open the hood.
2. Disconnect and isolate the negative battery cable.
3. Reach into the front wheel house ahead of the front wheel, remove the fastener, and lift the cover over the access hole in the front of the wheel house splash shield. Access to the rear of the lamp can be gained through this access hole.

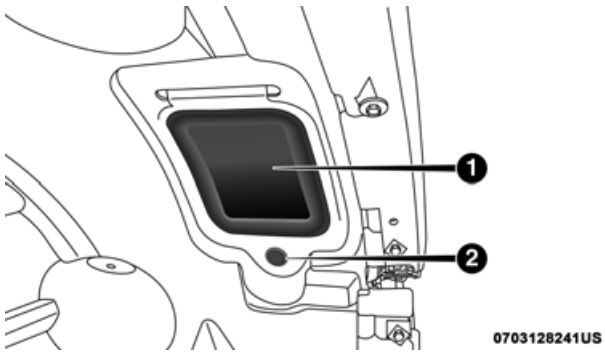

Splash Shield Access Cover

1 — Access Cover
2 — Fastener

4. Reach through the access hole of the wheel house splash shield and disengage the side marker socket by rotating counterclockwise ¼ turn.

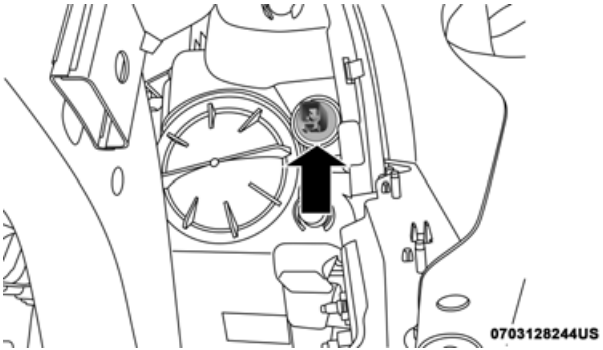

Side Marker Socket

5. Pull the socket and bulb straight out from the housing.
6. Separate the bulb from the socket without twisting.
7. Reverse the procedure for installation of new bulb and covers.

Fog Lamps — If Equipped

1. Reach under and behind the front bumper to access the back of the front fog lamp housing.
2. Disconnect the fog lamp wiring harness connector from the fog lamp bulb.
3. Rotate the bulb counterclockwise ¼ turn to unlock the bulb from the housing.
4. Pull the bulb straight out from the housing.

CAUTION!
Do not contaminate the bulb glass by touching it with your fingers or by allowing it to contact other oily surfaces. Shortened bulb life will result.

Rear Tail/Stop, Turn Signal And Backup Lamps

1. Remove the two screws and push pins that pass through the bed sheet metal.

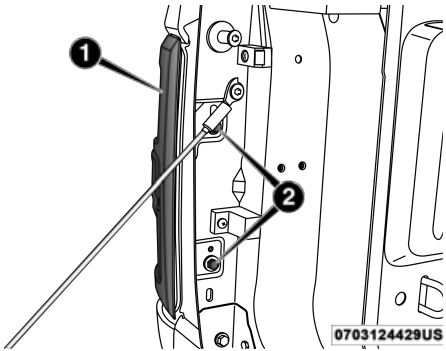

Tail Lamp Locations

1 — Tail Lamp
2 — Fasteners

2. Pull the outboard side of the lamp rearward far enough to unsnap the two receptacles on the outboard side of the lamp housing from the two plastic snap post retainers in the outer box side panel.

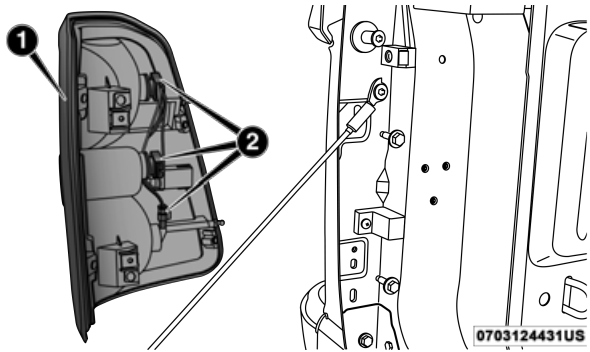

Tail Lamp Removed

1 — Tail Lamp Housing
2 — Bulb Socket Locations

3. Disconnect the wiring harness connectors from the bulb socket.

4. Rotate the bulb socket counterclockwise 1/4 turn to unlock it from the housing.

5. Pull the bulb straight out of the socket.

CAUTION!
Do not contaminate the bulb glass by touching it with your fingers or by allowing it to contact other oily surfaces. Shortened bulb life will result.

6. Reverse the procedure to install the bulb and housing.

Center High-Mounted Stoplamp (CHMSL) With Cargo Lamp

1. Remove the two screws holding the housing/lens to the body as shown.

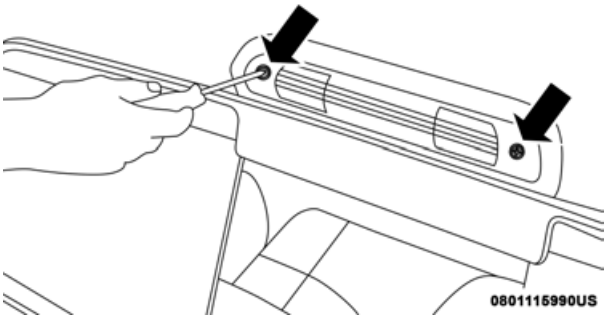

CHMSL Mounting Screw Locations

2. Separate the connector holding the housing and wiring harness to the body.

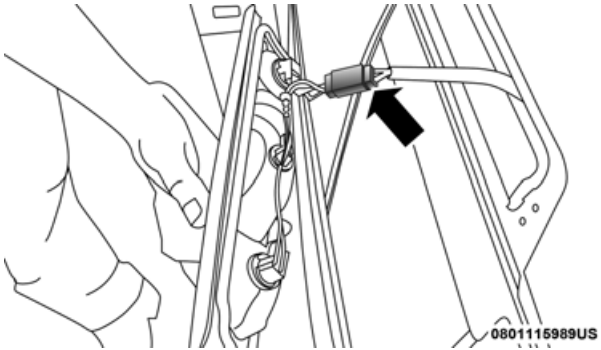

CHMSL Connector Location

3. Turn the desired bulb socket ¼ turn and remove the socket and bulb from housing.

4. Pull the desired bulb straight from the socket.

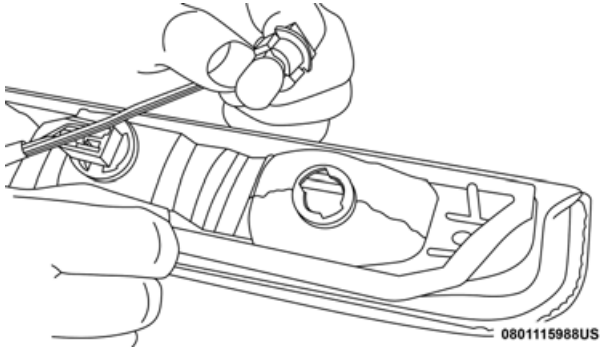

CHMSL Bulb And Socket

CAUTION!
Do not contaminate the bulb glass by touching it with your fingers or by allowing it to contact other oily surfaces. Shortened bulb life will result.

- Outside Bulbs: Cargo Lamps
- Inside Bulb: Center High-Mounted Stop Lamp

5. Reverse the procedure for installation of bulbs and housing.

Cab Top Clearance Lamps — If Equipped

1. Remove the two screws from the top of the lamp.

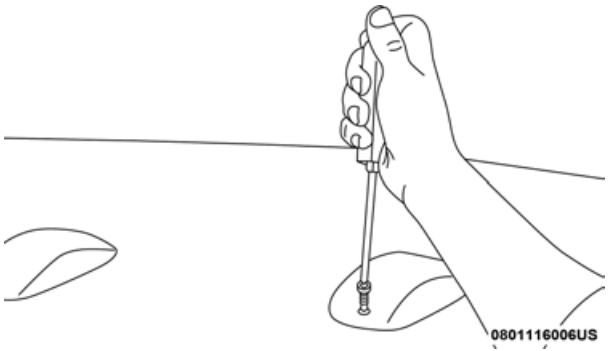

Removing Rear Screw From Clearance Lamp

2. Rotate the bulb socket ¼ turn and pull it from the lamp assembly.

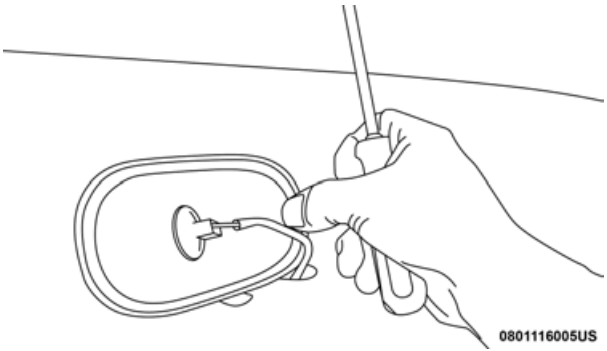

Removing Bulb Socket From Clearance Lamp

3. Pull the bulb straight from it's socket and replace.

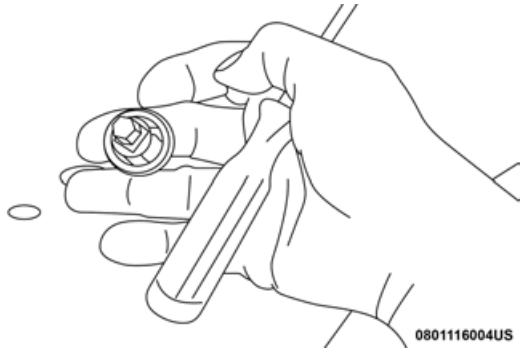

Removing The Bulb From The Bulb Socket

Rear Lamp Bar ID Marker (Dual Rear Wheels) — If Equipped

1. Loosen the two screws and the housing to gain access to the bulb sockets.

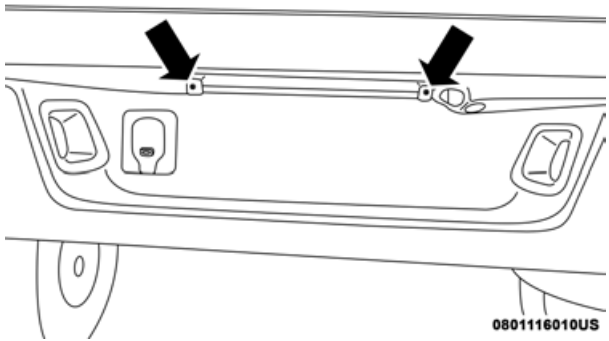

Screw Locations

2. Turn the socket ¼ turn counterclockwise to access the bulb.
3. Pull the bulb straight out from the socket.
4. Reverse the procedure for installation of the bulbs and housing.

Side Marker Lamps (Dual Rear Wheels) — If Equipped

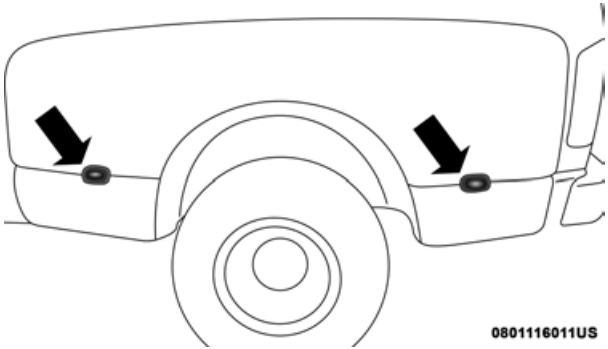

Side Marker Lamp Locations

1. Push rearward on the side marker lamp assembly.
2. Pull the entire assembly from the fender.
3. Turn the socket ¼ turn counterclockwise and remove from assembly to access the bulb.
4. Pull the bulb straight out from socket.
5. Reverse the procedure for installation of the bulbs and housing.

FUSES

WARNING!

- **When replacing a blown fuse, always use an appropriate replacement fuse with the same amp rating as the original fuse. Never replace a fuse with another fuse of higher amp rating. Never replace a blown fuse with metal wires or any other material. Do not place a fuse inside a circuit breaker cavity or vice versa. Failure to use proper fuses may result in serious personal injury, fire and/or property damage.**
- **Before replacing a fuse, make sure that the ignition is off and that all the other services are switched off and/or disengaged.**
- **If the replaced fuse blows again, contact an authorized dealer.**
- **If a general protection fuse for safety systems (air bag system, braking system), power unit systems (engine system, transmission system) or steering system blows, contact an authorized dealer.**

Power Distribution Center

The Power Distribution Center is located in the engine compartment near the battery. This center contains cartridge fuses, micro fuses, relays, and circuit breakers. A description of each fuse and component may be stamped on the inside cover, otherwise the cavity number of each fuse is stamped on the inside cover that corresponds to the following chart.

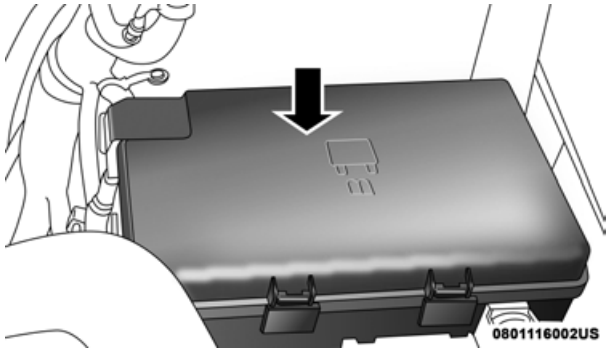

Power Distribution Center Location

Cavity	Cartridge Fuse	Micro Fuse	Description
F01	80 Amp Black	–	Rad Fan Control Module – If Equipped (DS 1500 Only)
F02	60 Amp Yellow	–	ABS Pump Motor (HD Only)
F03	60 Amp Yellow	–	Rad Fan – If Equipped
F04	50 Amp Red		400W Inverter – If Equipped (HD Only)
F05	40 Amp Green 50 Amp Red (Special Services Vehicle (SSV))	–	Compressor For Air Suspension – If Equipped

Cavity	Cartridge Fuse	Micro Fuse	Description
F06	40 Amp Green	–	ABS Pump Motor (DS 1500 Only)
F07	40 Amp Green	–	Starter Solenoid
F08	20 Amp Blue (DS 1500 LD/Cummins Diesel) 40 Amp Green	– –	NOX Sensor – If Equipped Aux Relay Output- SSV Only
F09	40 Amp Green (SSV & Cummins Diesel)	–	Aux Relay Output / Diesel Fuel Heater – If Equipped
F09	30 Amp Pink	–	Brake Vacuum Pump – If Equipped (HD Only)
F10	40 Amp Green	–	Body Controller / Exterior Lighting #2
F11	30 Amp Pink	–	PWR - Trailer Tow Electric Brake Batt Feed – If Equipped (DS 1500 Only)
F11	40 Amp Green	–	Brake System Module (ECU and Valves) (HD Only)
F12	40 Amp Green	–	Body Controller #3
F13	40 Amp Green	–	Blower Motor
F14	40 Amp Green	–	Body Controller #4 / Exterior Lighting
F15	30 Amp Pink 40 Amp Green	– –	Power Side Steps – If Equipped (HD Only) Extra Fuse - SSV Only
F16	30 Amp Pink	–	Smart-Bar Module – If Equipped (HD Only)
F17	30 Amp Pink	–	Winch Control Module – If Equipped (HD Only)

Cavity	Cartridge Fuse	Micro Fuse	Description
F19	20 Amp Blue (DS 1500 LD Diesel) 30 Amp Pink (Cummins Diesel)	–	SCR – If Equipped
F20	30 Amp Pink	–	Passenger Door Module
F21	30 Amp Pink	–	Drive Train Control Module
F22	20 Amp Blue	–	Engine Control Module GPEC / Heavy Duty / Other – If Equipped
F22	25 Amp White (Cummins Diesel)	–	PCM – If Equipped
F23	30 Amp Pink	–	CBC Feed # 1
F24	30 Amp Pink	–	Driver Door Module
F25	30 Amp Pink	–	Front Wiper
F26	30 Amp Pink	–	Antilock Brakes / Stability Control Module / Valves – If Equipped (DS 1500 Only)
F28	20 Amp Blue	–	Trailer Tow Backup Lights – If Equipped
F29	20 Amp Blue	–	Trailer Tow Parking Lights – If Equipped
F30	30 Amp Pink	–	Trailer Tow Receptacle / Trailer Tow (Separate E-Brake)/Trailer Tow (BUX)

Cavity	Cartridge Fuse	Micro Fuse	Description
F31	30 Amp Pink	–	Diesel Heater Control – If Equipped (DS 1500 LD Diesel)
F31	20 Amp Blue	–	Aux App SSV Only - If Equipped
F32	–	–	Aux Feed, Special Services Vehicle-If Equipped (DS 1500 Only)
F33	20 Amp Blue	–	Trans Control Module – If Equipped (HD Only) Aux Feed, SSV Only (DS 1500 Only)
F34	30 Amp Pink	–	Vehicle System Interface Module #2 – If Equipped (HD Only) SSV (DS 1500 Only)
F35	30 Amp Pink	–	Sunroof – If Equipped
F36	30 Amp Pink	–	Electric Back Light – If Equipped
F37	30 Amp Pink	–	Fuel Heater #2, Aux Relay 2 – If Equipped (HD Only) SSV (DS 1500 Only)
F38	30 Amp Pink	–	Integrated Trailer Brake Module – If Equipped (HD Only) Power Inverter 115V AC – If Equipped (DS 1500 Only)
F39	20 Amp Blue	–	Power Outlet – SSV Only
F40	–	10 Amp Red	Ventilated Seats – If Equipped (HD Only)

Cavity	Cartridge Fuse	Micro Fuse	Description
F41	–	10 Amp Red	Active Grille Shutter / Active Air Dam – If Equipped
F42	–	20 Amp Yellow	Horn
F43	–	15 Amp Blue	Heated Steering Wheel – If Equipped (HD Only)
F44	–	10 Amp Red	Diagnostic Port
F46	–	10 Amp Red	Upfitters Relay Coil – If Equipped (HD Only) Spare (DS 1500 Only)
F49	–	10 Amp Red	Instrument Panel Cluster / HVAC (DS 1500 Only) Instrument Cluster / MOD CSG (HD Only)
F50	–	20 Amp Yellow	Air Suspension Control Module – If Equipped
F51	–	10 Amp Red	Ignition Node Module / Keyless Ignition Node Module, Radio Frequency Hub Module / Electric Steering Column Lock - If Equipped
F52	–	5 Amp Tan	Battery Sensor
F53	–	20 Amp Yellow	Trailer Tow – Left Turn/Stop Lights - If Equipped
F54	–	20 Amp Yellow	Non Memory Adjustable Pedals - If Equipped
F56	–	15 Amp Blue	Additional Diesel Content - If Equipped (DS 1500 Only)

Cavity	Cartridge Fuse	Micro Fuse	Description
F57	–	20 Amp Yellow	TCM/PCM / Solenoid Trans Pressure SW (RFE Trans Only) – If Equipped (HD Only) Transmission (DS 1500 Only)
F58	–	10 Amp Red	Bed Lighting (LED) – If Equipped (HD Only)
F60	–	15 Amp Blue	Underhood Lamp / TCM – If Equipped (DS 1500 Only)
F61	–	10 Amp Red	UREA Sensor / PM Sensor – If Equipped (DS 1500 LD Diesel & Cummins Diesel)
F62	–	10 Amp Red	Air Conditioning Clutch
F63	–	20 Amp Yellow	Ignition Coils (Gas), Ignition Coils Capacitors (Gas) / Short Runner Valve Actuator / Urea Heater Control Unit (DS 1500 LD Diesel) / RLY Coil Feed-SCR (DS 1500 LD Diesel)
F64	–	25 Amp Clear	Fuel Injectors / Powertrain Control Module / SRV – If Equipped
F65	–	10 Amp Red	MOD Inverter (Wake Up) / Power Port / USB IP / WCPM – If Equipped (HD Only) Spare (DS 1500 Only)
F66	–	10 Amp Red	Sunroof / Light and Rain Sensor Module / Inside Rearview Mirror / Passenger Window SW / USB Port Rear / Feed for R/A RLY #2 Coil – If Equipped

Cavity	Cartridge Fuse	Micro Fuse	Description
F67	–	10 Amp Red	CD / DVD / UCI Port – If Equipped (HD Only) Bluetooth Hands-Free Module / CD – If Equipped (DS 1500 Only)
F68	–	10 Amp Red	AEB RACAM HTR – If Equipped (HD Only)
F69	–	15 Amp Blue	SCR Module – If Equipped (HD Only)
F70	–	30 Amp Green	Fuel Pump Motor / K09 RLY Coil Feed (Cummins Diesel) – If Equipped
F71	–	25 Amp Clear	Amplifier / Active Noise Cancelation – If Equipped (HD Only)
F72	–	10 Amp Red	PCM / DC/DC Converter Voltage– If Equipped (DS 1500 Only)
F73	–	20 Amp Yellow	Fuel Transfer Pump (Rear Tank) – If Equipped (HD Only)
F74	–	20 Amp Yellow	Brake Vacuum Pump Gas/Diesel – If Equipped (DS 1500 Only)
F74	–	10 Amp Red	Backup Alarm – If Equipped (HD Only)
F75	–	10 Amp Red	ATMM / Coil-SCR Module RLY– If Equipped (HD Only) Coolant Temperature Valve – If Equipped (DS 1500 Only)

Cavity	Cartridge Fuse	Micro Fuse	Description
F76	–	10 Amp Red	Electronic Stability Control (HD Only) Brake System Module / Stop Lamp Switch / Electric Park Brake / Clutch Pedal Switch (DS 1500 Only)
F77	–	10 Amp Red	Drivetrain Control Module / Front Axle Disconnect Module / TCM (HD Only) Drivetrain Control Module / ELSD / Front Axle Disconnect Module / Transmission Control Relay / RDM / Power Take Off Unit – If Equipped (DS 1500 Only)
F78	–	10 Amp Red	Engine Control Module / Powertrain Control Module / Electric Power Steering (DS 1500 Only)
F78	–	15 Amp Blue	Engine Control Module / Powertrain Control Module / AEB RACM MOD / Feed To AUX PDC Relay Coils (HD Only)
F79	–	15 Amp Blue	ID / Clearance Lights
F80	–	10 Amp Red	Universal Garage Door Opener / Compass / Anti-Intrusion Module (DS 1500 Only) ASSY Overhead Console / SW Assist / SW 911 – If Equipped (HD Only)
F81	–	20 Amp Yellow	Trailer Tow Right Turn / Stop Lights - If Equipped

Cavity	Cartridge Fuse	Micro Fuse	Description
F82	–	10 Amp Red	Steering Column Control Module / Cruise Control
F83	–	–	No Connection
F84	–	15 Amp Blue	ASBM / HVAC / ICS / Rear Heated Seat Switches
F85	–	10 Amp Red	Airbag Module
F86	–	10 Amp Red	Airbag Module
F87	–	10 Amp Red	Air Suspension / ITBM / Steering Column Control Module / MOD Gateway CAN-C Trailer TPM (HD Only) Air Suspension / Trailer Tow / DC/DC Converter (Voltage Stabilizer) / Steering Column Control Module / Occupant Classification Sensor (DS 1500 Only)
F88	–	15 Amp Blue	Instrument Panel Cluster
F90/F91	–	20 Amp Yellow	IGN or BATT Customer Selectable – If Equipped (HD Only) Power Outlet (Rear Seats) Customer Selectable (DS 1500 Only)
F93	–	20 Amp Yellow	Cigar Lighter - If Equipped

Cavity	Cartridge Fuse	Micro Fuse	Description
F94	–	10 Amp Red	Shift-By-Wire / Transfer Case Switch (DS 1500 Only) Shift-By-Wire / Transfer Case Switch / Module TPM Trailer (HD Only) / Module Gateway Can-C Trailer TPM (HD Only)
F95	–	10 Amp Red	Rearview Camera / Park Assist / CHMSL Camera / Blind Spot Sensor / Surround View Camera (HD Only) Rear Camera / Park Assist / Blind Spot Sensor / Compass (DS 1500 Only)
F96	–	10 Amp Red	Rear Seat Heater Switch / Trunk Lamp With Flashlamp Charger / Truck Lamp - If Equipped (DS 1500 Only) Trailer Camera – If Equipped (HD Only)
F97	–	25 Amp Clear	Rear Heated Seats And Heated Steering Wheel – If Equipped (DS 1500 Only)
F97	–	20 Amp Yellow	Front Heated Seat Passenger – If Equipped (HD Only)
F98	–	25 Amp Clear	Front Heated Seats – If Equipped (DS 1500 Only)
F98	–	20 Amp Yellow	Front Heated Seat Driver – If Equipped (HD Only)

Cavity	Cartridge Fuse	Micro Fuse	Description
F99	–	10 Amp Red	HVAC / DASM (DS 1500 Only) HVAC / In-Car Temperature Sensor / CSG MOD / Humidity Sensor (HD Only)
F100	–	10 Amp Red	Upfitters – If Equipped (HD Only)
F101	–	15 Amp Blue	SSV Only
F101	–	20 Amp Yellow	Rear Heated Seat Right (HD Only)
F102	–	20 Amp Yellow	Rear Heated Seat Left / Run RLY #3 Coil (HD Only)
F103	–	10 Amp Red	HeadLamp AFLS (HD Only)
F104	–	20 Amp Yellow	Power Outlets (Instrument Panel / Center Console) / Trunk – If Equipped (DS 1500 Only) UCI Port / USB Rear (HD Only)

CAUTION!

- **When installing the power distribution center cover, it is important to ensure the cover is properly positioned and fully latched. Failure to do so may allow water to get into the power distribution center and possibly result in an electrical system failure.**

(Continued)

CAUTION! ***(Continued)***

- **When replacing a blown fuse, it is important to use only a fuse having the correct amperage rating. The use of a fuse with a rating other than indicated may result in a dangerous electrical system overload. If a properly rated fuse continues to blow, it indicates a problem in the circuit that must be corrected.**

JACKING AND TIRE CHANGING

WARNING!

- **Do not attempt to change a tire on the side of the vehicle close to moving traffic. Pull far enough off the road to avoid the danger of being hit when operating the jack or changing the wheel.**
- **Being under a jacked-up vehicle is dangerous. The vehicle could slip off the jack and fall on you. You could be crushed. Never put any part of your body under a vehicle that is on a jack. If you need to get under a raised vehicle, take it to a service center where it can be raised on a lift.**
- **Never start or run the engine while the vehicle is on a jack.**
- **The jack is designed to be used as a tool for changing tires only. The jack should not be used to lift the vehicle for service purposes. The vehicle should be jacked on a firm level surface only. Avoid ice or slippery areas.**

NOTE:
If your vehicle is equipped with an air suspension system, there is a feature which allows the automatic leveling to be disabled to assist with changing a tire.

This feature can be activated through the Uconnect system.

Refer to “Uconnect Settings” in “Multimedia” for further information.

Jack Location

The jack and jack tools are stored under the front passenger seat.

Removal Of Jack And Tools

To access the jack and jack tools, you must remove the plastic access cover located on the side of the front passenger's seat. To remove the cover, pull the front part of the cover (closest to the front of the seat) toward you to release a locking tab. Once the front of the cover is loose, slide the cover toward the front of the seat until it is free from the seat frame.

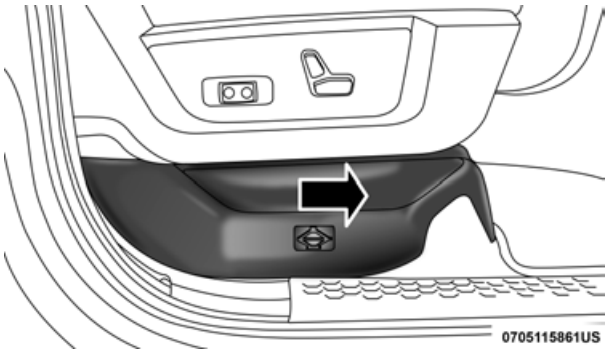

Jack Access Cover

Remove the jack and tools by turning the wing bolt counter-clockwise, remove the wing bolt and then slide the assembly out from under the seat.

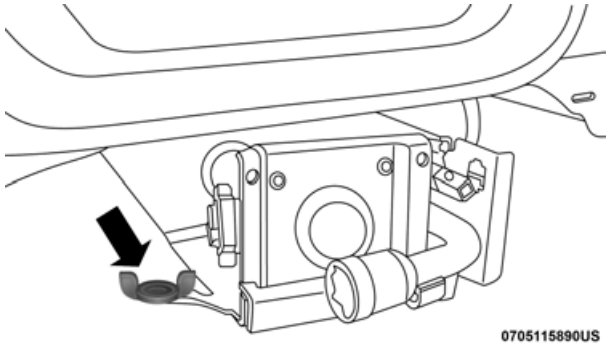

Wing Bolt/Jack And Tools

Remove the jack and tools from the bracket assembly. Turn the jack-turn-screw counterclockwise to release jack from bracket assembly.

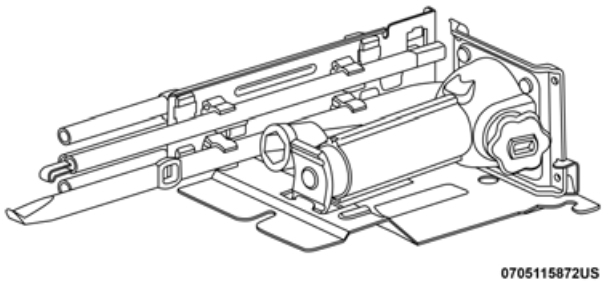

Jack And Tools Bracket Assembly

There are two ways to assemble the tools:

Assembled For Spare Tire Lowering/Raising

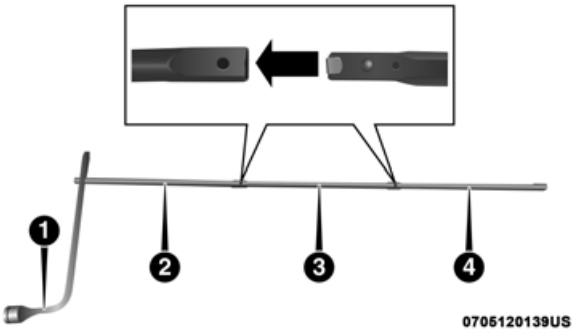

Assembled For Spare Tire Lowering/Raising

1 — Lug Wrench	3 — Extension 3
2 — Extension 2	4 — Extension 4

CAUTION!

- **The lug wrench can only be attached to extension 2.**
- **When attaching the tool to the winch mechanism be sure the large flared end opening on extension 4 is positioned correctly over the winch mechanism adjusting nut.**
- **Damage to the lug wrench, extensions and winch mechanism may occur from improper tool assembly.**

Assembled For Jack Operation

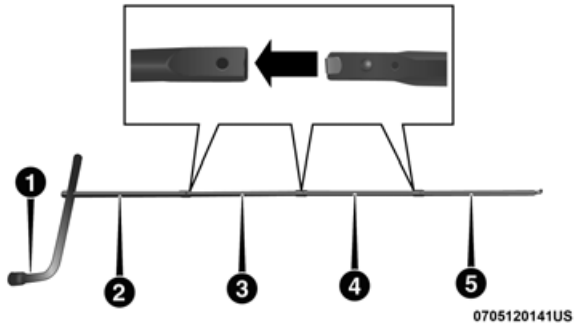

Assembled For Jack Operation

1 — Lug Wrench
2 — Extension 2
3 — Extension 3
4 — Extension 4
5 — Jack Driver

WARNING!
After using the jack and tools, always reinstall them in the original carrier and location. While driving you may experience abrupt stopping, rapid acceleration or sharp turns. A loose jack, tools, bracket or other objects in the vehicle may move around with force, resulting in serious injury.

Removing The Spare Tire

1. Remove the spare tire before attempting to jack up the truck. Attach the lug wrench to the extension tubes with the curved angle facing away from the vehicle. Insert the extension tube through the access hole between the lower tailgate and the top of the bumper and into the winch mechanism tube.

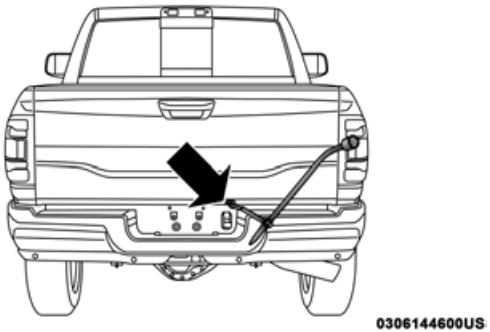

Inserting The Extension Tubes Into The Access Hole

2. Rotate the lug wrench handle counterclockwise until the spare tire is on the ground with enough cable slack to allow you to pull it out from under the vehicle.

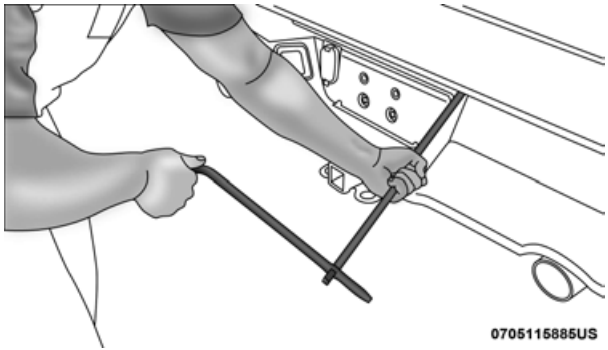

Rotating The Lug Wrench Handle

3. Pull the spare tire out from under the vehicle to gain access to the spare tire retainer.

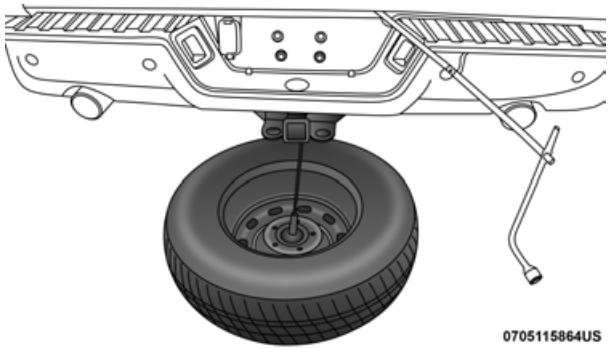

Pulling The Spare Tire Out

4. Lift the spare tire with one hand to give clearance to tilt the retainer at the end of the cable.

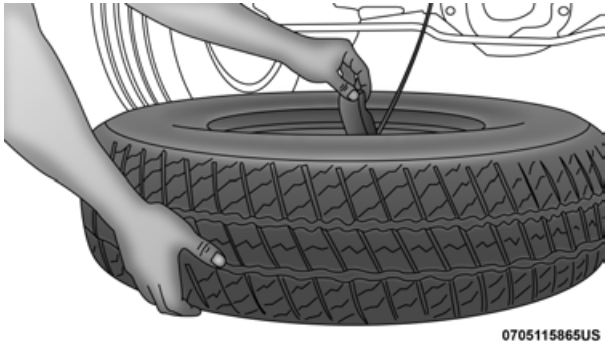

Gaining Access To The Retainer

5. Pull the retainer through the center of the wheel.

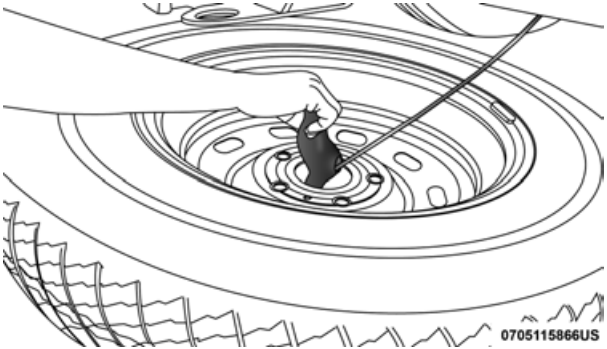

Pulling The Retainer Through The Center Of The Wheel

NOTE:
The winch mechanism is designed for use with the extension tubes only. Use of an air wrench or other power tools is not recommended and can damage the winch.

Preparations For Jacking

1. Park the vehicle on a firm, level surface. Avoid ice or slippery areas.

WARNING!
Do not attempt to change a tire on the side of the vehicle close to moving traffic. Pull far enough off the road to avoid being hit when operating the jack or changing the wheel.

2. Place the gear selector into PARK. On four-wheel drive vehicles, shift the transfer case to the 4L position.
3. Turn on the Hazard Warning flasher.
4. Apply the parking brake.
5. Turn the ignition OFF.
6. Block both the front and rear of the wheel diagonally opposite the jacking position. For example, if the right front wheel is being changed, block the left rear wheel.

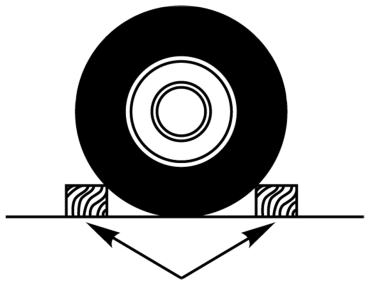

Wheel Blocked

NOTE:
Passengers should not remain in the vehicle when the vehicle is being jacked.

Jacking Instructions

WARNING!

Carefully follow these tire changing warnings to help prevent personal injury or damage to your vehicle:

- **Always park on a firm, level surface as far from the edge of the roadway as possible before raising the vehicle.**
- **Turn on the Hazard Warning flasher.**
- **Block the wheel diagonally opposite the wheel to be raised.**
- **Apply the parking brake firmly and set the transmission in PARK.**
- **Never start or run the engine with the vehicle on a jack.**
- **Do not let anyone sit in the vehicle when it is on a jack.**
- **Do not get under the vehicle when it is on a jack. If you need to get under a raised vehicle, take it to a service center where it can be raised on a lift.**
- **Only use the jack in the positions indicated and for lifting this vehicle during a tire change.**
- **If working on or near a roadway, be extremely careful of motor traffic.**

(Continued)

WARNING! ***(Continued)***

- **To assure that spare tires, flat or inflated, are securely stowed, spares must be stowed with the valve stem facing the ground.**

060600714

Jack Warning Label

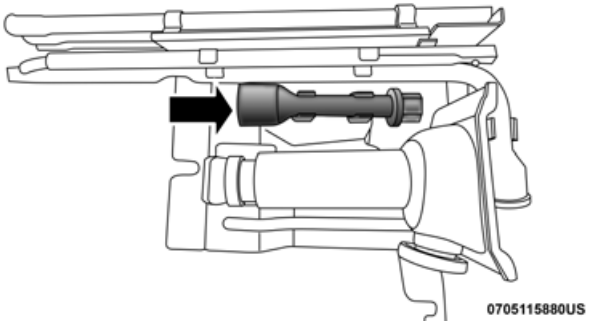

Lug Wrench Adaptor Shown In Jack And Tools Assembly

CAUTION!
Do not attempt to raise the vehicle by jacking on locations other than those indicated in the Jacking Instructions for this vehicle.

1. Remove the spare wheel, jack, and tools from storage.
2. Using the lug wrench, loosen, but do not remove, the wheel nuts by turning them counterclockwise one turn while the wheel is still on the ground. Changing a dually tire requires the lug wrench adapter.

NOTE:
If your vehicle is equipped with hub caps/wheel covers they must be removed before raising the vehicle off the ground. Refer to "Hub Caps/Wheel Covers — If Equipped" in this section.

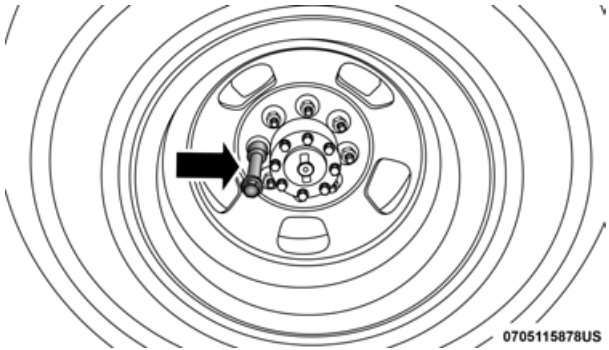

Lug Wrench Adapter

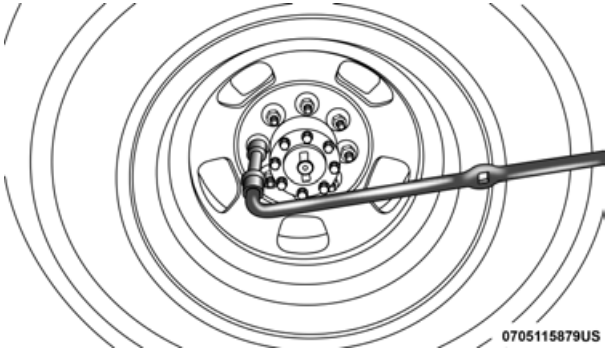

Lug Wrench Adapter And Wrench

3. Placement of the jack is critical:

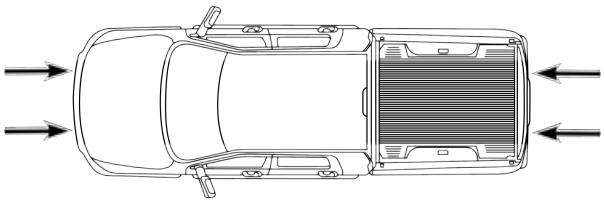

Jack / Extensions Placement

Front Jacking Location

When changing the front wheel, assemble the jack driver to the jack and connect the jack driver to the extension tubes. Place the jack under the axle as close to the tire as possible with the drive tubes extending to the front. Connect the extension tubes and lug wrench.

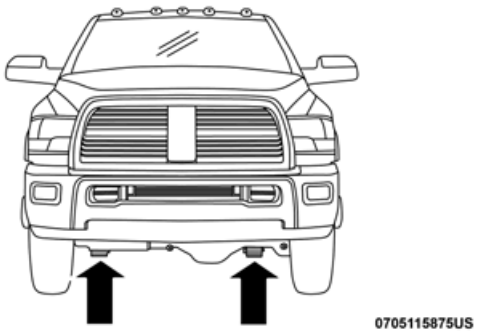

Front Jacking Location

Rear Jacking Location

When changing a rear wheel, assemble the jack driver to the jack and connect the jack driver to the extension tubes. Place the jack under the axle between the spring and the shock absorber with the extension tubes extending to the rear.

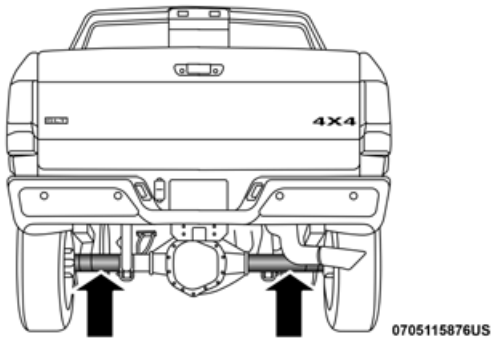

Rear Jacking Location

Connect the extension tubes and lug wrench.

CAUTION!
Before raising the wheel off the ground, make sure that the jack will not damage surrounding truck parts and adjust the jack position as required.

NOTE:
If the bottle jack will not lower by turning the dial (thumb-wheel) by hand, it may be necessary to use the jack driver in order to lower the jack.

4. By rotating the lug wrench clockwise, raise the vehicle until the wheel just clears the surface.

WARNING!
Raising the vehicle higher than necessary can make the vehicle less stable. It could slip off the jack and hurt someone near it. Raise the vehicle only enough to remove the tire.

5. Remove the lug nuts and pull the wheel off. On single rear-wheel (SRW) trucks, install the spare wheel and lug nuts with the cone shaped end of the wheel nuts toward the wheel. On 3500 dual rear-wheel models (DRW) trucks, if the outer tire is being replaced then leave the inner wheel on the vehicle. If the inner wheel is being replaced remove the outer wheel and replace the inner wheel. The wheel nuts are a two-piece assembly with a flat face. Lightly tighten the lug nuts. To avoid the risk of forcing the vehicle off the jack, do not fully tighten the lug nuts until the vehicle has been lowered.

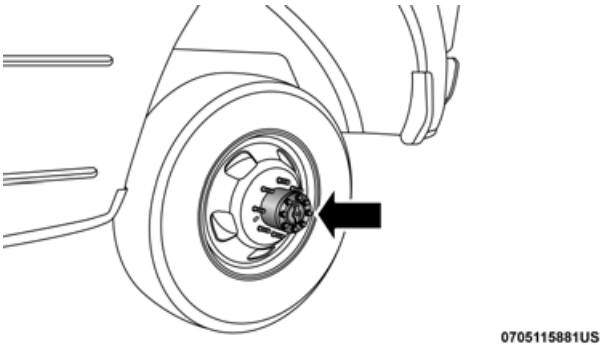

Rear Inner Wheel Proper Placement (Dual Rear Wheel Equipped)

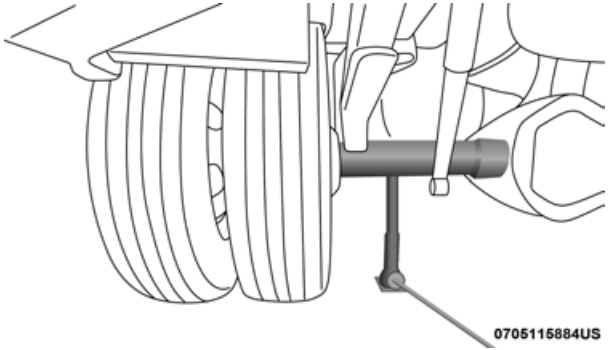

Dual Rear Wheel Jack Placement

6. Finish tightening the lug nuts. Push down on the lug wrench while at the end of the handle for increased leverage. Tighten the lug nuts in a star pattern until each nut has been tightened twice. For the correct lug nut torque refer to "Torque Specifications" in "Technical Specifications". If in doubt about the correct tightness, have them checked with a torque wrench by an authorized dealer or service station.

WARNING!
A loose tire or jack thrown forward in a collision or hard stop, could endanger the occupants of the vehicle. Always stow the jack parts and the spare tire in the places provided.

7. Install the wheel center cap and remove the wheel blocks. Do not install chrome or aluminum wheel center caps on the spare wheel. This may result in cap damage.

8. Lower the jack to its fully closed position. Stow the replaced tire, jack, and tools as previously described.

NOTE:
The bottle jack will not lower by turning the dial (thumbwheel) by hand, it may be necessary to use the jack driver in order to lower the jack

9. Adjust the tire pressure when possible.

NOTE:
Do not oil wheel studs. For chrome wheels, do not substitute with chrome plated lug nuts.

To Stow The Flat Or Spare

NOTE:
Have the flat tire repaired or replaced immediately.

WARNING!
A loose tire or jack thrown forward in a collision or hard stop could endanger the occupants of the vehicle. Always stow the jack parts and the spare tire in the places provided. Have the deflated (flat) tire repaired or replaced immediately.

1. Turn the wheel so that the valve stem is facing the ground and toward the rear of the vehicle for convenience in checking the spare tire inflation. Slide the wheel retainer through the center of the wheel.

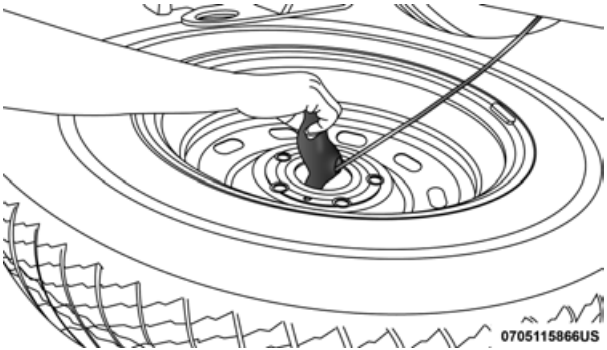

Reinstalling The Retainer

2. Lift the spare tire with one hand to give clearance to tilt the retainer at the end of the cable and position it properly across the wheel opening.

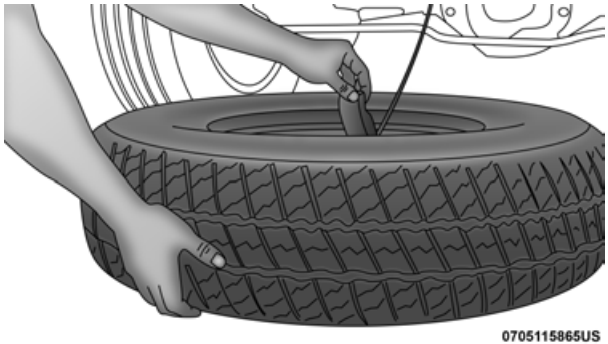

Pushing The Retainer Through The Center Of The Wheel And Positioning It

3. Attach the lug wrench to the extension tubes with the curved angle facing away from the vehicle. Insert the extensions through the access hole between the lower tailgate and the top of the bumper and into the winch mechanism tube.

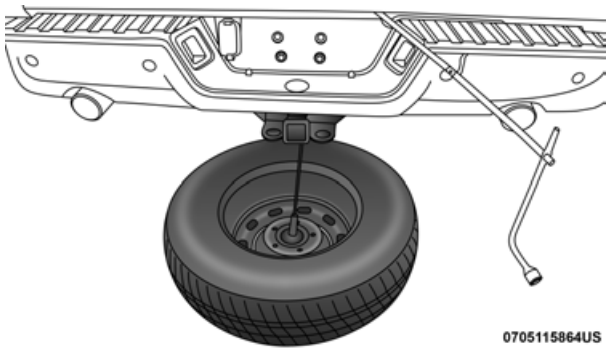

Lug Wrench And Extension Tubes Assembled And In Position

4. Rotate the lug wrench handle clockwise until the wheel is drawn into place against the underside of the vehicle. Continue to rotate until you feel the winch mechanism slip, or click three or four times. It cannot be overtightened. Push against the tire several times to ensure it is firmly in place.

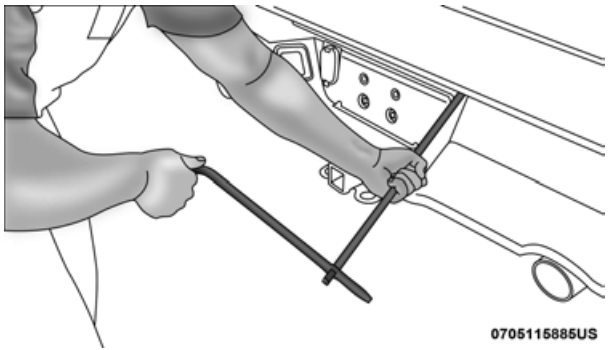

Rotating The Lug Wrench Handle

NOTE:
The winch mechanism is designed for use with the jack extension tube only. Use of an air wrench or other power tools is not recommended and can damage the winch.

Reinstalling The Jack And Tools

1. Tighten the jack all the way down by turning the jack turn-screw counterclockwise until the jack is snug.
2. Position the jack and tools into bracket assembly. Make sure the lug wrench is under the jack near the jack turn-screw. Snap tools into bracket assembly clips. Install the jack into bracket assembly and turn the jack-turn-screw clockwise until jack is snug into bracket assembly.

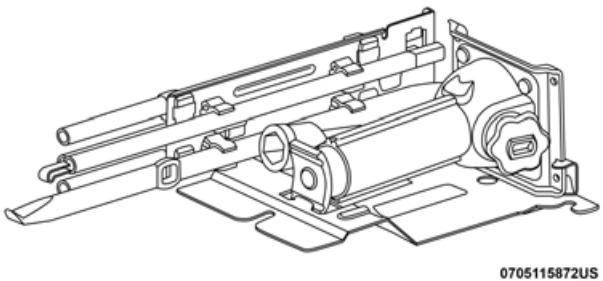

Jack And Tools Bracket Assembly

3. Place the jack and tool bracket assembly in the storage position holding the jack by the jack turn-screw, slip the jack and tools under the seat so that the bottom slot engages into the fastener on the floor.

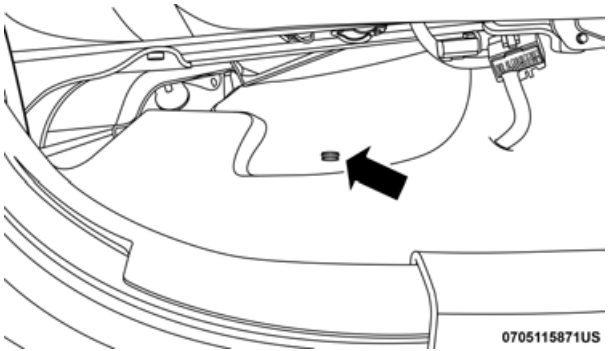

Jack Hold Down Fastener

NOTE:
Ensure that the jack and tool bracket assembly slides into the front hold down location.

4. Turn the wing bolt clockwise to secure to the floor pan. Reinstall the plastic cover.

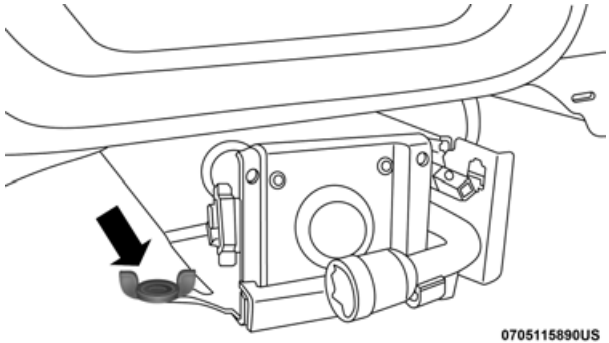

Wing Bolt/Jack And Tools

Hub Caps/Wheel Covers — If Equipped

The hub caps must be removed before raising the vehicle off the ground.

CAUTION!
Use extreme caution when removing the front and rear wheel covers. Damage can occur to the center cap and/or the wheel if screwdriver type tools are used. A pulling motion, not a pry off motion, is recommended to remove the caps.

For 2500/3500 single rear wheel (SRW) models, use the flat end of the lug wrench to hook and pull off the hub cap. Find the opening in the hub cap, insert the lug wrench, and pull off the cap. If you need to pry against the wheel, protect the wheel surface.

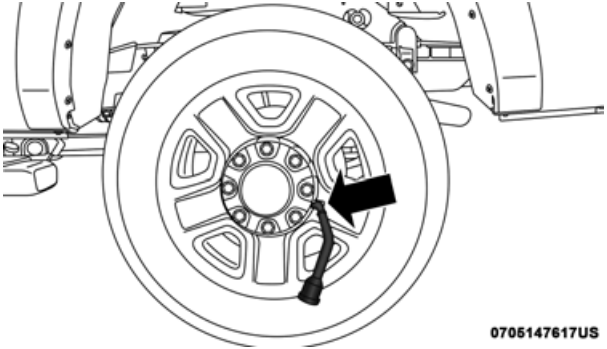

Lug Wrench Insertion Location — Hub Cap

On 3500 models with dual rear wheels (DRW), you must first remove the hub caps—use the procedure noted for the single rear wheel. For the wheel covers (wheel skins), insert the flat end of the lug wrench between the outer edge of the wheel cover and the wheel. Pry against the wheel to remove the wheel cover. Repeat this procedure around the wheel until the cover pops off.

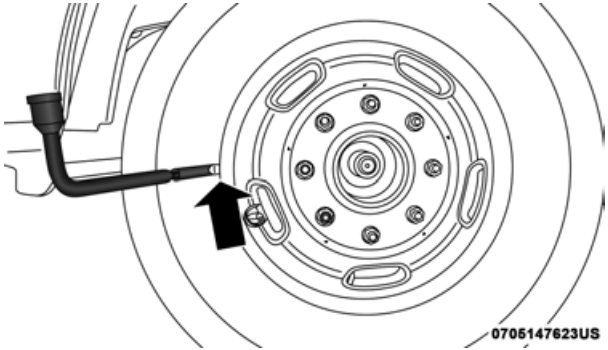

Lug Wrench Insertion Location — Wheel Cover

CAUTION!
• **Use a pulling motion to remove the hub cap. Do not use a twisting motion when removing the hub cap, damage to the hub cap; finish may occur.** • **The rear hub caps on the dual rear wheel has two pull off notches. Make sure that the hook of the jack handle driver is located squarely in the cap notch before attempting to pull off.**

Replace the wheel covers using a rubber mallet to ease the installation. Align the wheel cover vent holes to the wheel vent holes. Tap on the wheel cover as needed to firmly seat it evenly around the wheel.

JUMP STARTING

If your vehicle has a discharged battery, it can be jump started using a set of jumper cables and a battery in another vehicle, or by using a portable battery booster pack. Jump starting can be dangerous if done improperly, so please follow the procedures in this section carefully.

WARNING!
Do not attempt jump starting if the battery is frozen. It could rupture or explode and cause personal injury.

CAUTION!
Do not use a portable battery booster pack or any other booster source with a system voltage greater than 12 Volts or damage to the battery, starter motor, alternator or electrical system may occur.

NOTE:
When using a portable battery booster pack, follow the manufacturer's operating instructions and precautions.

Preparations For Jump Start

The battery in your vehicle is located in the front of the engine compartment, behind the left headlight assembly.

NOTE:
The positive battery post may be covered with a protective cap if equipped. Lift up on the cap to gain access to the positive battery post. Do not jump off fuses. Only jump directly off positive post which has a positive **(+)** symbol on or around the post.

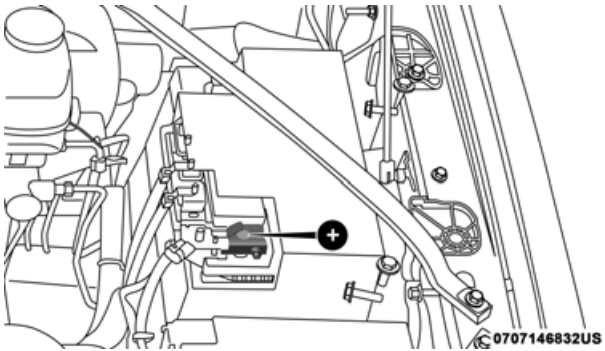

Positive Battery Post

WARNING!

- **Take care to avoid the radiator cooling fan whenever the hood is raised. It can start anytime the ignition switch is ON. You can be injured by moving fan blades.**
- **Remove any metal jewelry such as rings, watch bands and bracelets that could make an inadvertent electrical contact. You could be seriously injured.**
- **Batteries contain sulfuric acid that can burn your skin or eyes and generate hydrogen gas which is flammable and explosive. Keep open flames or sparks away from the battery.**

1. Apply the parking brake, shift the automatic transmission into PARK and turn the ignition OFF.
2. Turn off the heater, radio, and all unnecessary electrical accessories.

3. If using another vehicle to jump start the battery, park the vehicle within the jumper cables' reach, apply the parking brake and make sure the ignition is OFF.

WARNING!
Do not allow vehicles to touch each other as this could establish a ground connection and personal injury could result.

Jump Starting Procedure

WARNING!
Failure to follow this jump starting procedure could result in personal injury or property damage due to battery explosion.

CAUTION!
Failure to follow these procedures could result in damage to the charging system of the booster vehicle or the discharged vehicle.

Connecting The Jumper Cables

1. Connect the positive **(+)** end of the jumper cable to the positive **(+)** post of the discharged vehicle.

NOTE:
Do not jump off fuses. Only jump directly off positive post.

2. Connect the opposite end of the positive **(+)** jumper cable to the positive **(+)** post of the booster battery.

3. Connect the negative **(-)** end of the jumper cable to the negative **(-)** post of the booster battery.

4. Connect the opposite end of the negative **(-)** jumper cable to a good engine ground (exposed metal part of the discharged vehicle's engine) away from the battery and the fuel injection system.

WARNING!
Do not connect the jumper cable to the negative (-) post of the discharged battery. The resulting electrical spark could cause the battery to explode and could result in personal injury. Only use the specific ground point, do not use any other exposed metal parts.

5. Start the engine in the vehicle that has the booster battery, let the engine idle a few minutes, and then start the engine in the vehicle with the discharged battery.

CAUTION!
Do not connect jumper cable to any of the fuses on the positive battery terminal. The resulting electrical current will blow the fuse.

6. Once the engine is started, remove the jumper cables in the reverse sequence:

Disconnecting The Jumper Cables

1. Disconnect the negative **(-)** end of the jumper cable from the engine ground of the vehicle with the discharged battery.
2. Disconnect the opposite end of the negative **(-)** jumper cable from the negative **(-)** post of the booster battery.
3. Disconnect the positive **(+)** end of the jumper cable from the positive **(+)** post of the booster battery.
4. Disconnect the opposite end of the positive **(+)** jumper cable from the positive **(+)** post of the vehicle with the discharged battery.

If frequent jump starting is required to start your vehicle you should have the battery and charging system inspected at an authorized dealer.

CAUTION!
Accessories plugged into the vehicle power outlets draw power from the vehicle's battery, even when not in use (i.e., cellular devices, etc.). Eventually, if plugged in long enough without engine operation, the vehicle's battery will discharge sufficiently to degrade battery life and/or prevent the engine from starting.

MANUAL PARK RELEASE — 8–SPEED TRANSMISSION

WARNING!
Always secure your vehicle by fully applying the parking brake before activating the Manual Park Release. In addition, you should be seated in the driver's seat with your foot firmly on the brake pedal when activating the Manual Park Release. Activating the Manual Park Release will allow your vehicle to roll away if it is not secured by the parking brake, or by proper connection to a tow vehicle. Activating the Manual Park Release on an unsecured vehicle could lead to serious injury or death for those in or around the vehicle.

In order to push or tow the vehicle in cases where the transmission will not shift out of PARK (such as a dead battery), a Manual Park Release is available.

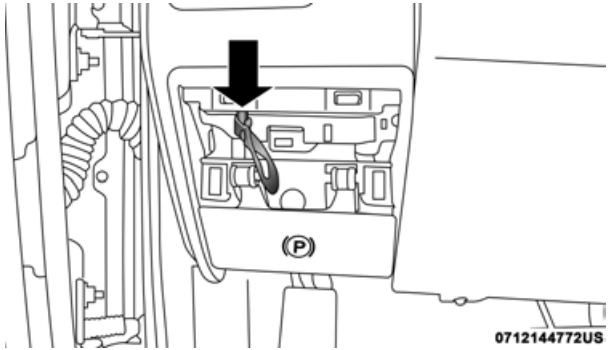

Manual Park Release Pull Strap

Follow these steps to activate the Manual Park Release:

1. Firmly apply the parking brake.
2. Using a small screwdriver or similar tool, remove the Manual Park Release access cover, which is just above the parking brake release handle, below and to the left of the steering column.
3. Press and maintain firm pressure on the brake pedal.

4. Using the screwdriver or similar tool, push the Manual Park Release lever locking tab (just below the middle of the lever) to the right.

5. While holding the locking tab in the disengaged position, pull the tether strap to rotate the lever rearward, until it locks in place pointing towards the driver's seat. Release the locking tab and verify that the Manual Park Release lever is locked in the released position.

6. The vehicle is now out of PARK and can be towed. Release the parking brake only when the vehicle is securely connected to a tow vehicle.

To Reset The Manual Park Release:

1. Push the locking tab to the right, to unlock the lever.

2. Rotate the Manual Park Release lever forward to its original position, until the locking tab snaps into place to secure the lever.

3. Pull gently on the tether strap to confirm that the lever is locked in its stowed position.

4. Re-install the access cover.

IF YOUR ENGINE OVERHEATS

In any of the following situations, you can reduce the potential for overheating by taking the appropriate action.

- On the highways — slow down.
- In city traffic — while stopped, place the transmission in NEUTRAL, but do not increase the engine idle speed while preventing vehicle motion with the brakes.

NOTE:
There are steps that you can take to slow down an impending overheat condition:

- If your air conditioner (A/C) is on, turn it off. The A/C system adds heat to the engine cooling system and turning the A/C off can help remove this heat.
- You can also turn the temperature control to maximum heat, the mode control to floor and the blower control to high. This allows the heater core to act as a supplement to the radiator and aids in removing heat from the engine cooling system.

WARNING!

You or others can be badly burned by hot engine coolant (antifreeze) or steam from your radiator. If you see or hear steam coming from under the hood, do not open the hood until the radiator has had time to cool. Never try to open a cooling system pressure cap when the radiator or coolant bottle is hot.

CAUTION!

Driving with a hot cooling system could damage your vehicle. If the temperature gauge reads HOT (H), pull over and stop the vehicle. Idle the vehicle with the air conditioner turned off until the pointer drops back into the normal range. If the pointer remains on HOT (H), and you hear continuous chimes, turn the engine off immediately and call for service.

FREEING A STUCK VEHICLE

If your vehicle becomes stuck in mud, sand, or snow, it can often be moved using a rocking motion. Turn the steering wheel right and left to clear the area around the front wheels. Then shift back and forth between DRIVE and REVERSE, while gently pressing the accelerator. Use the least amount of accelerator pedal pressure that will maintain the rocking motion, without spinning the wheels or racing the engine.

NOTE:

- For trucks equipped with an 8–speed transmission, shifts between DRIVE and REVERSE can only be achieved at wheel speeds of 5 mph (8 km/h) or less. Whenever the transmission remains in NEUTRAL for more than two seconds, you must press the brake pedal to engage DRIVE or REVERSE.
- Push the "ESC Off" switch, to place the Electronic Stability Control (ESC) system in "Partial Off" mode, before rocking the vehicle. Refer to “Electronic Brake Control” in “Safety” for further information. Once the vehicle has been freed, push the "ESC Off" switch again to restore "ESC On" mode.

WARNING!

Fast spinning tires can be dangerous. Forces generated by excessive wheel speeds may cause damage, or even failure, of the axle and tires. A tire could explode and injure someone. Do not spin your vehicle's wheels faster than 30 mph (48 km/h) or for longer than 30 seconds continuously without stopping when you are stuck and do not let anyone near a spinning wheel, no matter what the speed.

CAUTION!

- **Racing the engine or spinning the wheels may lead to transmission overheating and failure. Allow the engine to idle with the transmission in NEUTRAL for at least one minute after every five rocking-motion cycles. This will minimize overheating and reduce the risk of transmission failure during prolonged efforts to free a stuck vehicle.**
- **When "rocking" a stuck vehicle by shifting between DRIVE and REVERSE, do not spin the wheels faster than 15 mph (24 km/h), or drivetrain damage may result.**
- **Revving the engine or spinning the wheels too fast may lead to transmission overheating and failure. It can also damage the tires. Do not spin the wheels above 30 mph (48 km/h) while in gear (no transmission shifting occurring).**

TOWING A DISABLED VEHICLE

This section describes procedures for towing a disabled vehicle using a commercial towing service.

If the transmission and drivetrain are operable, disabled vehicles may also be towed as described under "Recreational Towing" in the "Starting And Operating" section.

NOTE:
Vehicles equipped with the Air Suspension System must be placed in Transport mode, before tying them down (from the body) on a trailer or flatbed truck. If the vehicle cannot be placed in Transport mode (for example, engine will not run), tie-downs must be fastened to the axles (not to the body). Failure to follow these instructions may cause fault codes to be set and/or cause loss of proper tie-down tension.

Refer to "Air Suspension System — If Equipped" in "Starting And Operating" for more information.

Towing Condition	Wheels OFF The Ground	2WD Models	4WD Models
Flat Tow	NONE	**If transmission is operable:** •Transmission in **NEUTRAL** •30 mph (48 km/h) **max speed** •30 miles (48 km) **max** distance (8–speed transmission)	**See instructions in "Recreational Towing" under "Starting And Operating"** • Automatic Transmission in **PARK** • Transfer Case in **NEUTRAL (N)** • Tow in **forward** direction
Wheel Lift Or Dolly Tow	Front		**NOT ALLOWED**
	Rear	OK	**NOT ALLOWED**
Flatbed	**ALL**	**BEST METHOD**	**BEST METHOD**

Proper towing or lifting equipment is required to prevent damage to your vehicle. Use only tow bars and other equipment designed for this purpose, following equipment manufacturer's instructions. Use of safety chains is mandatory. Attach a tow bar or other towing device to main structural members of the vehicle, not to bumpers or associated brackets. State and local laws regarding vehicles under tow must be observed.

If you must use the accessories (wipers, defrosters, etc.) while being towed, the ignition must be in the ON/RUN mode, not the ACC mode.

If the key fob is unavailable or the vehicle's battery is discharged, refer to "Manual Park Release" in this section for instructions on shifting the transmission out of PARK for towing.

CAUTION!

- **Do not use sling type equipment when towing. Vehicle damage may occur.**
- **When securing the vehicle to a flat bed truck, do not attach to front or rear suspension components. Damage to your vehicle may result from improper towing.**

Two-Wheel Drive Models

The manufacturer recommends towing your vehicle with all four wheels **OFF** the ground using a flatbed.

If flatbed equipment is not available, and the transmission is operable, the vehicle may be towed (with rear wheels on the ground) under the following conditions:

- The transmission must be in NEUTRAL.

NOTE:
Refer to "Manual Park Release" in this section for instructions on shifting the transmission to NEUTRAL when the engine is OFF.

- The towing speed must not exceed 30 mph (48 km/h).
- The towing distance must not exceed 30 miles (48 km) for 8–speed transmission.

If the transmission is not operable, or the vehicle must be towed faster than 30 mph (48 km/h) or farther than 30 miles (48 km) for 8–speed transmission, tow with the rear wheels **OFF** the ground. Acceptable methods are to tow the vehicle on a flatbed, or with the front wheels raised and the rear wheels on a towing dolly, or (when using a suitable steering wheel stabilizer to hold the front wheels in the straight position) with the rear wheels raised and the front wheels on the ground.

CAUTION!
Towing this vehicle in violation of the above requirements can cause severe transmission damage. Damage from improper towing is not covered under the New Vehicle Limited Warranty.

Four-Wheel Drive Models

The manufacturer recommends towing with all wheels **OFF** the ground. Acceptable methods are to tow the vehicle on a flatbed or with one end of vehicle raised and the opposite end on a towing dolly.

If flatbed equipment is not available, and the transfer case is operable, the vehicle may be towed (in the forward direction, with **ALL** wheels on the ground), **IF** the transfer case is in NEUTRAL (N) and the transmission is in PARK.

Refer to “Recreational Towing” in “Starting And Operating” for further information and detailed instructions.

CAUTION!

- **Front or rear wheel lifts must not be used (if the remaining wheels are on the ground). Internal damage to the transmission or transfer case will occur if a front or rear wheel lift is used when towing.**
- **Towing this vehicle in violation of the above requirements can cause severe transmission and/or transfer case damage. Damage from improper towing is not covered under the New Vehicle Limited Warranty.**

Emergency Tow Hooks — If Equipped

Your vehicle may be equipped with emergency tow hooks.

NOTE:
For off-road recovery, it is recommended to use both of the front tow hooks to minimize the risk of damage to the vehicle.

WARNING!

- **Do not use a chain for freeing a stuck vehicle. Chains may break, causing serious injury or death.**
- **Stand clear of vehicles when pulling with tow hooks. Tow straps may become disengaged, causing serious injury.**

CAUTION!

Tow hooks are for emergency use only, to rescue a vehicle stranded off road. Do not use tow hooks for tow truck hookup or highway towing. You could damage your vehicle.

ENHANCED ACCIDENT RESPONSE SYSTEM (EARS)

This vehicle is equipped with an Enhanced Accident Response System.

Please refer to “Occupant Restraint Systems” in “Safety” for further information on the Enhanced Accident Response System (EARS) function.

EVENT DATA RECORDER (EDR)

This vehicle is equipped with an Event Data Recorder (EDR). The main purpose of an EDR is to record data that will assist in understanding how a vehicle’s systems performed under certain crash or near crash-like situations, such as an air bag deployment or hitting a road obstacle.

Please refer to “Occupant Restraint Systems” in “Safety” for further information on the Event Data Recorder (EDR).

SERVICING AND MAINTENANCE

SCHEDULED SERVICING

Your vehicle is equipped with an automatic oil change indicator system. The oil change indicator system will remind you that it is time to take your vehicle in for scheduled maintenance.

Based on engine operation conditions, the oil change indicator message will illuminate. This means that service is required for your vehicle. Operating conditions such as frequent short-trips, trailer tow, extremely hot or cold ambient temperatures, and E85 fuel usage will influence when the "Oil Change Required" message is displayed. Severe Operating Conditions can cause the change oil message to illuminate as early as 3,500 miles (5,600 km) since last reset. Have your vehicle serviced as soon as possible, within the next 500 miles (805 km).

Your authorized dealer will reset the oil change indicator message after completing the scheduled oil change.

If a scheduled oil change is performed by someone other than your authorized dealer, the message can be reset by referring to the steps described under "Instrument Cluster Display" in "Getting To Know Your Instrument Panel".

NOTE:
Under no circumstances should oil change intervals exceed 8,000 miles (13,000 km), twelve months or 350 hours of engine run time, whichever comes first. The 350 hours of engine run or idle time is generally only a concern for fleet customers.

Severe Duty All Models

NOTE:
Change Engine Oil at 4,000 miles (6,500 km) or 350 hours of engine run time if the vehicle is operated in a dusty and off road environment or is operated predominantly at idle, or only very low engine RPM's. This type of vehicle use is considered Severe Duty.

Once A Month Or Before A Long Trip:

- Check engine oil level
- Check windshield washer fluid level
- Check tire pressure and look for unusual wear or damage. Rotate tires at the first sign of irregular wear, even if it occurs before the oil indicator system turns on.
- Check the fluid levels of the coolant reservoir, brake master cylinder, power steering and automatic transmission (six-speed only) and fill as needed
- Check function of all interior and exterior lights

Maintenance Plan

Required Maintenance

Refer to the Maintenance Plan on the following pages for required maintenance.

At Every Oil Change Interval As Indicated By Oil Change Indicator System:
• Change oil and filter.
• Rotate the tires. **Rotate at the first sign of irregular wear, even if it occurs before the oil indicator system turns on.**
• Inspect battery and clean and tighten terminals as required.
• Inspect brake pads, shoes, rotors, drums, hoses and park brake.
• Inspect engine cooling system protection and hoses.
• Inspect exhaust system.
• Inspect engine air cleaner if using in dusty or off-road conditions. If required, replace air cleaner filter.

Mileage or time passed (whichever comes first)	20,000	30,000	40,000	50,000	60,000	70,000	80,000	90,000	100,000	110,000	120,000	130,000	140,000	150,000
Or Years:	**2**	**3**	**4**	**5**	**6**	**7**	**8**	**9**	**10**	**11**	**12**	**13**	**14**	**15**
Or Kilometers:	32,000	48,000	64,000	80,000	96,000	112,000	128,000	144,000	160,000	176,000	192,000	208,000	224,000	240,000
Additional Inspections														
Inspect the CV/Universal joints.	X		X		X		X		X		X		X	
Inspect front suspension, tie rod ends, and replace if necessary.	X		X		X		X		X		X		X	
Inspect the front and rear axle surfaces. If gear oil leakage is suspected, check the fluid level. If using your vehicle for police, taxi, fleet, off-road or frequent trailer towing, change axle fluid.	X		X		X		X		X		X		X	
Inspect the brake linings, replace as necessary.	X		X		X		X		X		X		X	
Adjust parking brake as necessary.	X		X		X		X		X		X		X	
Inspect transfer case fluid.		X						X						X

Mileage or time passed (whichever comes first)	20,000	30,000	40,000	50,000	60,000	70,000	80,000	90,000	100,000	110,000	120,000	130,000	140,000	150,000
Or Years:	**2**	**3**	**4**	**5**	**6**	**7**	**8**	**9**	**10**	**11**	**12**	**13**	**14**	**15**
Or Kilometers:	32,000	48,000	64,000	80,000	96,000	112,000	128,000	144,000	160,000	176,000	192,000	208,000	224,000	240,000
Additional Maintenance														
Replace cabin air filter.	X		X		X		X		X		X		X	
Replace engine air filter.		X			X			X			X			X
Replace spark plugs.[1]									X					
Flush and replace the engine coolant at 10 years or 150,000 miles (240,000 km) whichever comes first.									X					X
Inspect the transfer case fluid, change for any of the following: police, taxi, fleet, or frequent trailer towing.					X						X			
Change the transfer case fluid.											X			
Inspect and replace PCV valve if necessary.									X					

1. The spark plug change interval is mileage based only, yearly intervals do not apply.

WARNING!

- **You can be badly injured working on or around a motor vehicle. Do only service work for which you have the knowledge and the right equipment. If you have any doubt about your ability to perform a service job, take your vehicle to a competent mechanic.**
- **Failure to properly inspect and maintain your vehicle could result in a component malfunction and effect vehicle handling and performance. This could cause an accident.**

Heavy Duty Use Of The Vehicle

Change engine oil at 4,000 miles (6,500 km) or 350 hours of engine run time if the vehicle is operated in a dusty and off road environment or is operated predominately at idle or only very low engine RPM's. This type of vehicle use is considered Severe Duty.

ENGINE COMPARTMENT

6.4L Engine

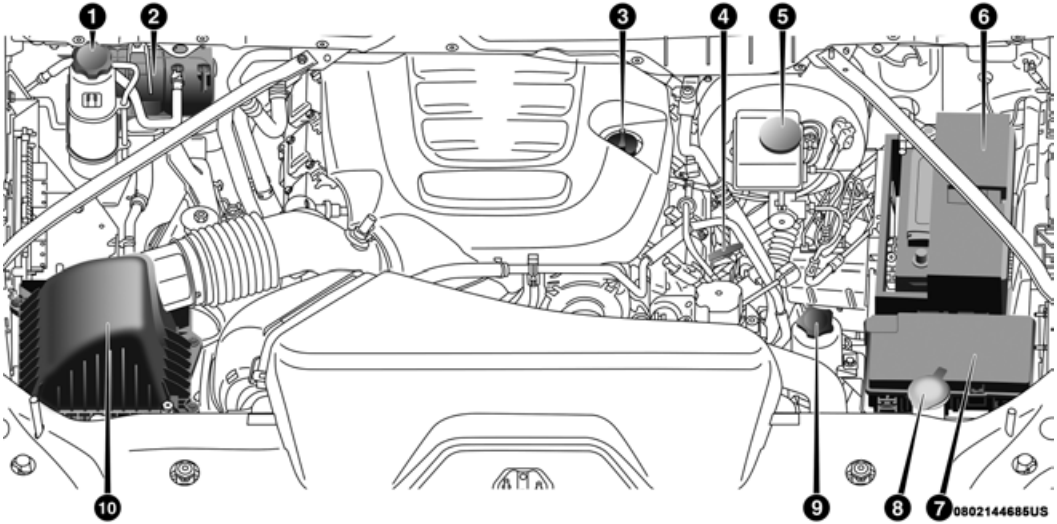

1 — Engine Coolant Pressure Cap
2 — Engine Coolant Reservoir
3 — Engine Oil Fill
4 — Engine Oil Dipstick
5 — Brake Fluid Reservoir
6 — Battery
7 — Distribution Center (Fuses)
8 — Washer Fluid Reservoir
9 — Power Steering Fluid Reservoir
10 — Air Cleaner Filter

Checking Oil Level — Gas Engine

To assure proper lubrication of your vehicle's engine, the engine oil must be maintained at the correct level. Check the oil level at regular intervals, such as every fuel stop. The best time to check the engine oil level is about five minutes after a fully warmed up engine is shut off.

Checking the oil while the vehicle is on level ground will improve the accuracy of the oil level readings. Always maintain the oil level within the SAFE zone on the dipstick. Adding one quart of oil when the reading is at the bottom of the SAFE zone will result in a reading at the top of the safe zone on these engines.

CAUTION!
Overfilling or underfilling will cause oil aeration or loss of oil pressure. This could damage your engine.

Adding Washer Fluid

The fluid reservoir is located under the hood and should be checked for fluid level at regular intervals. Fill the reservoir with windshield washer solvent only (not radiator antifreeze). When refilling the washer fluid reservoir, take some washer fluid and apply it to a cloth or towel and wipe the wiper blades clean. This will help blade performance.

To prevent freeze-up of your windshield washer system in cold weather, select a solution or mixture that meets or exceeds the temperature range of your climate. This rating information can be found on most washer fluid containers.

WARNING!
Commercially available windshield washer solvents are flammable. They could ignite and burn you. Care must be exercised when filling or working around the washer solution.

After the engine has warmed up, operate the defroster for a few minutes to reduce the possibility of smearing or freezing the fluid on the cold windshield. Windshield washer solution used with water as directed on the container, aids cleaning action, reduces the freezing point to avoid line clogging, and is not harmful to paint or trim.

Maintenance-Free Battery

Your vehicle is equipped with a maintenance-free battery. You will never have to add water, nor is periodic maintenance required.

WARNING!

- **Battery fluid is a corrosive acid solution and can burn or even blind you. Do not allow battery fluid to contact your eyes, skin, or clothing. Do not lean over a battery when attaching clamps. If acid splashes in eyes or on skin, flush the area immediately with large amounts of water. Refer to "Jump Starting Procedure" in "In Case Of Emergency" for further information.**
- **Battery gas is flammable and explosive. Keep flame or sparks away from the battery. Do not use a booster battery or any other booster source with an output greater than 12 Volts. Do not allow cable clamps to touch each other.**
- **Battery posts, terminals, and related accessories contain lead and lead compounds. Wash hands after handling.**

CAUTION!

- **It is essential when replacing the cables on the battery that the positive cable is attached to the positive post and the negative cable is attached to the negative post. Battery posts are marked positive (+) and negative (-) and are identified on the battery case. Cable clamps should be tight on the terminal posts and free of corrosion.**
- **If a "fast charger" is used while the battery is in the vehicle, disconnect both vehicle battery cables before connecting the charger to the battery. Do not use a "fast charger" to provide starting voltage.**

DEALER SERVICE

An authorized dealer has the qualified service personnel, special tools, and equipment to perform all service operations in an expert manner. Service Manuals are available which include detailed service information for your vehicle. Refer to these Service Manuals before attempting any procedure yourself.

NOTE:
Intentional tampering with emissions control systems may void your warranty and could result in civil penalties being assessed against you.

WARNING!
You can be badly injured working on or around a motor vehicle. Only do service work for which you have the knowledge and the proper equipment. If you have any doubt about your ability to perform a service job, take your vehicle to a competent mechanic.

Engine Oil — Gas Engine

Change Engine Oil

The oil change indicator system will remind you that it is time to take your vehicle in for scheduled maintenance. Refer to the "Maintenance Plan" for further information.

NOTE:
Under no circumstances should oil change intervals exceed 8,000 miles (13,000 km), twelve months or 350 hours of engine run time, whichever comes first. The 350 hours of engine run or idle time is generally only a concern for fleet customers.

Engine Oil Selection — 6.4L

For best performance and maximum protection under all types of operating conditions, the manufacturer only recommends engine oils that are API Certified and meet the requirements of FCA Material Standard MS-12633.

American Petroleum Institute (API) Engine Oil Identification Symbol

This symbol means that the oil has been certified by the American Petroleum Institute (API). The manufacturer only recommends API Certified engine oils.

This symbol certifies 0W-20, 5W-20, 0W-30, 5W-30 and 10W-30 engine oils.

CAUTION!
Do not use chemical flushes in your engine oil as the chemicals can damage your engine. Such damage is not covered by the New Vehicle Limited Warranty.

Engine Oil Viscosity (SAE Grade) — 6.4L Engine

Use Mopar SAE 0W-40 engine oil approved to FCA Material Standard MS-12633 such as Pennzoil Ultra equivalent is recommended for all operating temperatures.

The engine oil filler cap also shows the recommended engine oil viscosity for your engine. For information on engine oil filler cap location, refer to the "Engine Compartment" illustration in this section.

Lubricants which do not have both the engine oil certification mark and the correct SAE viscosity grade number should not be used.

Synthetic Engine Oils

You may use synthetic engine oils provided the recommended oil quality requirements are met, and the recommended maintenance intervals for oil and filter changes are followed.

Synthetic engine oils which do not have both the engine oil certification mark and the correct SAE viscosity grade number should not be used.

Materials Added To Engine Oil

The manufacturer strongly recommends against the addition of any additives (other than leak detection dyes) to the engine oil. Engine oil is an engineered product and its performance may be impaired by supplemental additives.

Disposing Of Used Engine Oil And Oil Filters

Care should be taken in disposing of used engine oil and oil filters from your vehicle. Used oil and oil filters, indiscriminately discarded, can present a problem to the environment. Contact an authorized dealer, service station or governmental agency for advice on how and where used oil and oil filters can be safely discarded in your area.

Engine Oil Filter

The engine oil filter should be replaced with a new filter at every engine oil change.

Engine Oil Filter Selection

This manufacturer's engines have a full-flow type disposable oil filter. Use a filter of this type for replacement. The quality of replacement filters varies considerably. Only high quality filters should be used to assure most efficient service. Mopar engine oil filters are high quality oil filters and are recommended.

Engine Air Cleaner Filter

Refer to the “Maintenance Plan” in this section for the proper maintenance intervals.

NOTE:
Be sure to follow the “Severe Duty Conditions” maintenance interval if applicable.

WARNING!

The air induction system (air cleaner, hoses, etc.) can provide a measure of protection in the case of engine backfire. Do not remove the air induction system (air cleaner, hoses, etc.) unless such removal is necessary for repair or maintenance. Make sure that no one is near the engine compartment before starting the vehicle with the air induction system (air cleaner, hoses, etc.) removed. Failure to do so can result in serious personal injury.

Engine Air Cleaner Filter Selection

The quality of replacement engine air cleaner filters varies considerably. Only high quality filters should be used to assure most efficient service. Mopar engine air cleaner filters are a high quality filter and are recommended.

Engine Air Cleaner Filter Inspection And Replacement

Inspect engine air cleaner filter for dirt and or debris, if you find evidence of either dirt or debris you should change your air cleaner filter.

Engine Air Cleaner Filter Removal

1. With suitable tool fully loosen (six) fasteners on air cleaner filter.

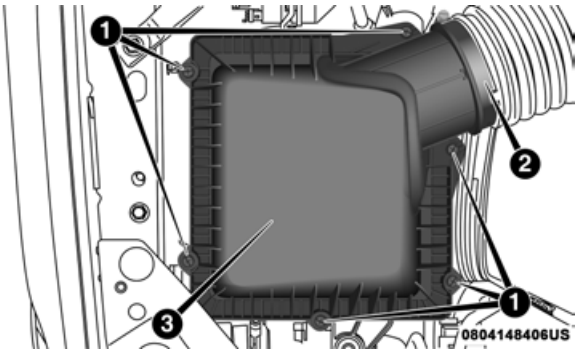

Air Cleaner Filter

1 — Fasteners
2 — Air Hose Clamp
3 — Air Cleaner Cover

2. Lift the air cleaner cover to access the air cleaner filter.
3. Remove the air cleaner filter element from the housing assembly.

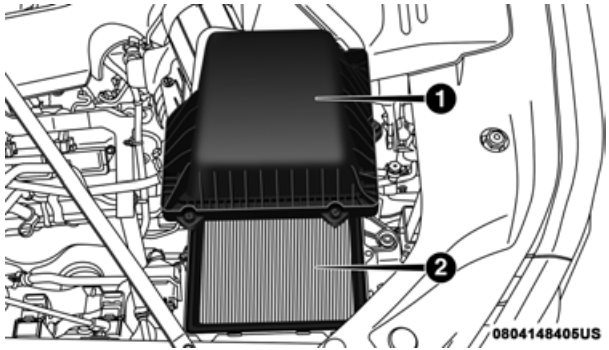

Open Air Cleaner Filter Assembly

1 — Air Cleaner Cover
2 — Air Cleaner Filter

Engine Air Cleaner Filter Installation

NOTE:
Inspect and clean the housing if dirt or debris is present before replacing the air filter element.

1. Install the air cleaner filter element into the housing assembly with the air cleaner filter inspection surface facing downward.
2. Install the air cleaner cover onto the housing assembly.
3. Tighten the fasteners (six) on the air cleaner filter assembly

Air Conditioner Maintenance

For best possible performance, your air conditioner should be checked and serviced by an authorized dealer at the start of each warm season. This service should include cleaning of the condenser fins and a performance test. Drive belt tension should also be checked at this time.

WARNING!

- **Use only refrigerants and compressor lubricants approved by the manufacturer for your air conditioning system. Some unapproved refrigerants are flammable and can explode, injuring you. Other unapproved refrigerants or lubricants can cause the system to fail, requiring costly repairs. Refer to Warranty Information Book, for further warranty information.**
- **The air conditioning system contains refrigerant under high pressure. To avoid risk of personal injury or damage to the system, adding refrigerant or any repair requiring lines to be disconnected should be done by an experienced technician.**

CAUTION!

Do not use chemical flushes in your air conditioning system as the chemicals can damage your air conditioning components. Such damage is not covered by the New Vehicle Limited Warranty.

Refrigerant Recovery And Recycling R-134a — If Equipped

R-134a Air Conditioning Refrigerant is a hydrofluorocarbon (HFC) that is an ozone-friendly substance. The manufacturer recommends that air conditioning service be performed by an authorized dealer or other service facilities using recovery and recycling equipment.

NOTE:
Use only manufacturer approved A/C system PAG compressor oil and refrigerants.

Refrigerant Recovery And Recycling — R–1234yf

R–1234yf Air Conditioning Refrigerant is a hydrofluoroolefin (HFO) that is endorsed by the Environmental Protection Agency and is an ozone-friendly substance with a low global-warming potential. The manufacturer recommends that air conditioning service be performed by an authorized dealer using recovery and recycling equipment.

NOTE:
Use only manufacturer approved A/C system PAG compressor oil, and refrigerants.

Cabin Filter Replacement (A/C Air Filter)

Refer to the “Maintenance Plan” for the proper maintenance intervals.

WARNING!
Do not remove the cabin air filter while the vehicle is running, or while the ignition is in the ACC or ON/RUN mode. With the cabin air filter removed and the blower operating, the blower can contact hands and may propel dirt and debris into your eyes, resulting in personal injury.

The cabin air filter is located in the fresh air inlet behind the glove compartment. Perform the following procedure to replace the filter:

1. Open the glove compartment and remove all contents.

2. With the glove compartment door open, remove the glove compartment tension tether and tether clip by sliding the clip toward the face of the glove compartment door. Lift the clip out of glove compartment door and release into dash panel.

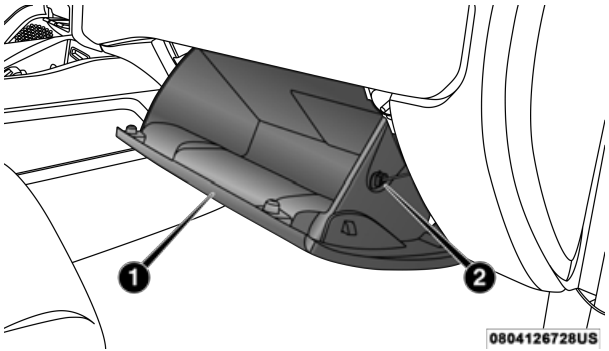

Right Side Of Glove Compartment

1 — Glove Compartment Door
2 — Glove Compartment Tension Tether

3. There are travel stops on both sides of the glove compartment. Push inward on right side of the glove compartment travel stop to disengage the stop. Then pull the right of the glove compartment outward (away from the hinge) to disengaging the right side of the compartment from the hinge. Continue by removing the left side from the hinge by slightly lowering the compartment while pulling outward until it is completely disengaged from the hinge.

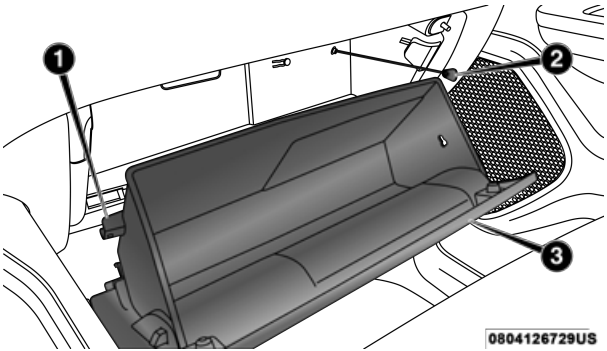

Glove Compartment

1 — Glove Compartment Travel Stop
2 — Glove Compartment Tension Tether
3 — Glove Compartment Door

4. Remove the filter cover by pushing in on the finger tabs on each end of the filter cover.

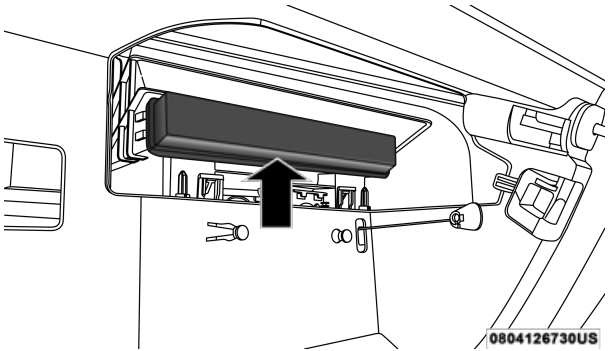

Filter Cover

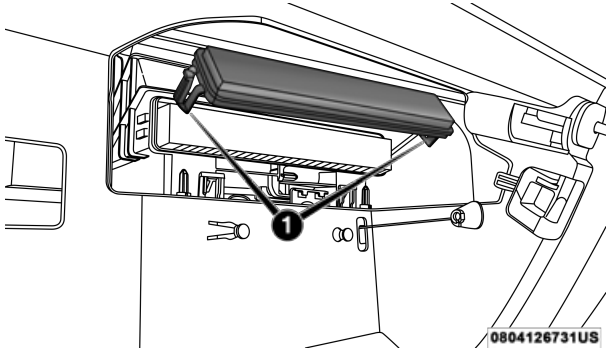

Filter Cover Removal

1 — Finger Tabs

5. Remove the cabin air filter by pulling it straight out of the housing.

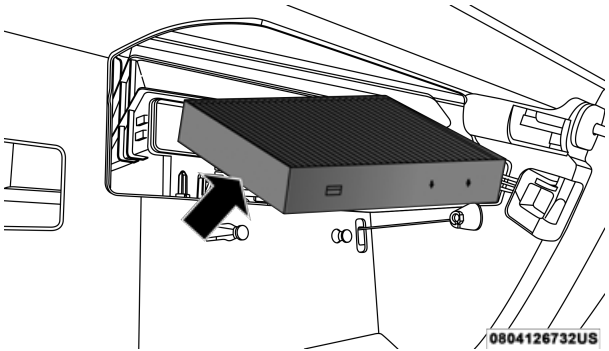

Cabin Air Filter

6. Install the cabin air filter with the arrow on the filter pointing toward the floor. When installing the filter cover, press on each end until you hear an audible click.

CAUTION!
The cabin air filter is identified with an arrow to indicate airflow direction through the filter. Failure to properly install the filter will result in the need to replace it more often.

7. Reinstall the glove compartment on the hinges.

8. Pull the tension tether outward and reinstall the glove compartment past the travel stops by pushing in on the glove compartment sides.

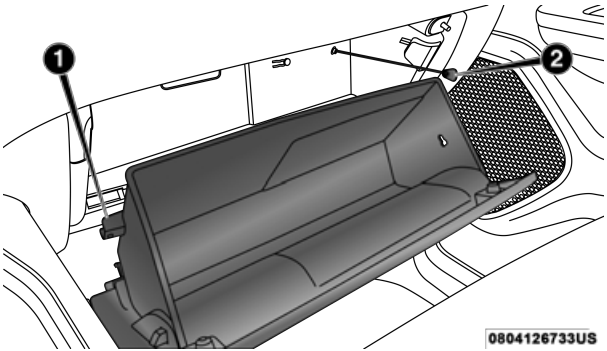

Right Side Of Glove Compartment

1 — Glove Compartment Travel Stop
2 — Glove Compartment Tension Tether

NOTE:
Ensure the glove compartment door hinges and glove compartment travel stops are fully engaged.

9. Reattach the glove compartment tension tether by inserting the tether clip in the glove compartment and sliding the clip away from the face of the glove compartment door.

Accessory Drive Belt Inspection

WARNING!

- **Do not attempt to inspect an accessory drive belt with vehicle running.**
- **When working near the radiator cooling fan, disconnect the fan motor lead. The fan is temperature controlled and can start at any time regardless of ignition mode. You could be injured by the moving fan blades.**
- **You can be badly injured working on or around a motor vehicle. Only do service work for which you have the knowledge and the proper equipment. If you have any doubt about your ability to perform a service job, take your vehicle to a competent mechanic.**

When inspecting accessory drive belts, small cracks that run across ribbed surface of belt from rib to rib, are considered normal. These are not a reason to replace belt. However, cracks running along a rib (not across) are not normal. Any belt with cracks running along a rib must be replaced. Also have the belt replaced if it has excessive wear, frayed cords or severe glazing.

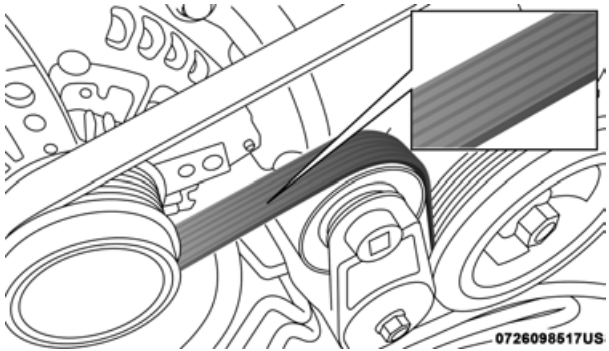

Accessory Belt (Serpentine Belt)

Conditions that would require replacement:

- Rib chunking (one or more ribs has separated from belt body)
- Rib or belt wear
- Longitudinal belt cracking (cracks between two ribs)
- Belt slips
- “Groove jumping" (belt does not maintain correct position on pulley)

- Belt broken (note: identify and correct problem before new belt is installed)
- Noise (objectionable squeal, squeak, or rumble is heard or felt while drive belt is in operation)

Some conditions can be caused by a faulty component such as a belt pulley. Belt pulleys should be carefully inspected for damage and proper alignment.

Belt replacement on some models requires the use of special tools, we recommend having your vehicle serviced at an authorized dealer.

Body Lubrication

Locks and all body pivot points, including such items as seat tracks, door hinge pivot points and rollers, liftgate, tailgate, decklid, sliding doors and hood hinges, should be lubricated periodically with a lithium based grease, such as Mopar Spray White Lube to assure quiet, easy operation and to protect against rust and wear. Prior to the application of any lubricant, the parts concerned should be wiped clean to remove dust and grit; after lubricating excess oil and grease should be removed. Particular attention should also be given to hood latching components to ensure proper function. When performing other underhood services, the hood latch, release mechanism and safety catch should be cleaned and lubricated.

The external lock cylinders should be lubricated twice a year, preferably in the Fall and Spring. Apply a small amount of a high quality lubricant, such as Mopar Lock Cylinder Lubricant directly into the lock cylinder.

Windshield Wiper Blades

Clean the rubber edges of the wiper blades and the windshield periodically with a sponge or soft cloth and a mild nonabrasive cleaner. This will remove accumulations of salt or road film.

Operation of the wipers on dry glass for long periods may cause deterioration of the wiper blades. Always use washer fluid when using the wipers to remove salt or dirt from a dry windshield.

Avoid using the wiper blades to remove frost or ice from the windshield. Keep the blade rubber out of contact with petroleum products such as engine oil, gasoline, etc.

NOTE:
Life expectancy of wiper blades varies depending on geographical area and frequency of use. Poor performance of blades may be present with chattering, marks, water lines or wet spots. If any of these conditions are present, clean the wiper blades or replace as necessary.

The wiper blades and wiper arms should be inspected periodically, not just when wiper performance problems are experienced. This inspection should include the following points:

- Wear or uneven edges
- Foreign material
- Hardening or cracking
- Deformation or fatigue

If a wiper blade or wiper arm is damaged, replace the affected wiper arm or blade with a new unit. Do not attempt to repair a wiper arm or blade that is damaged.

Wiper Blade Removal/Installation

CAUTION!
Do not allow the wiper arm to spring back against the glass without the wiper blade in place or the glass may be damaged.

1. Lift the wiper arm to raise the wiper blade off of the glass, until the wiper arm is in the full up position.

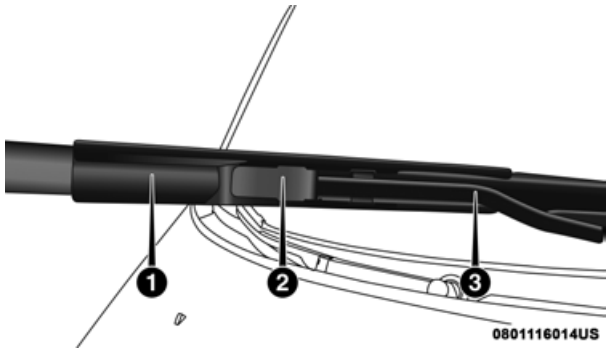

Windshield Wiper Arm

1 — Wiper
2 — Locking Tab
3 — Wiper Arm

2. To disengage the wiper blade from the wiper arm, flip up the locking tab.

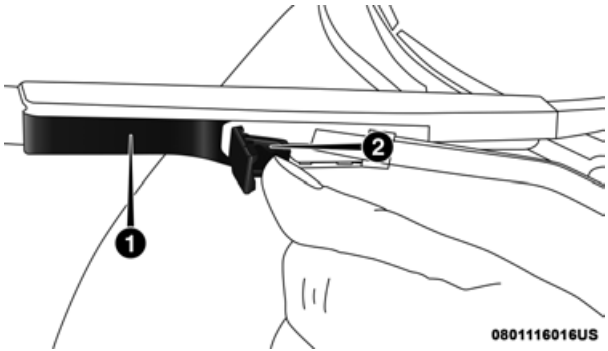

Wiper Locking Assembly

1 — Wiper
2 — Locking Tab

3. Tilt the lower end of the wiper blade away from the arm and use one finger push the release tab toward the wiper arm.

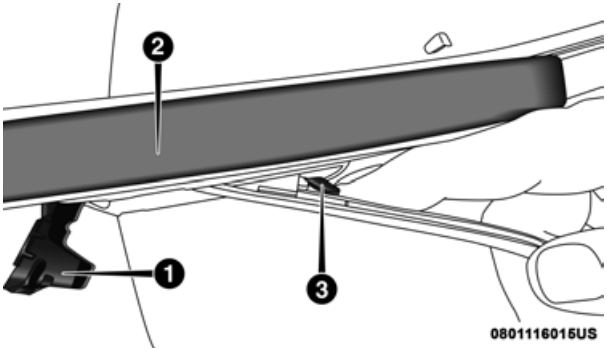

Wiper Disengaging

1 — Locking Tab
2 — Wiper
3 — Release Tab

4. Slide the wiper blade down towards the base of the wiper arm.

5. With the wiper blade disengaged, remove the wiper blade from the wiper arm by holding the wiper arm with one hand and separating the wiper blade from the wiper arm with the other hand (move the wiper blade down toward the base of the wiper arm and away from the J hook in the end of the wiper arm).

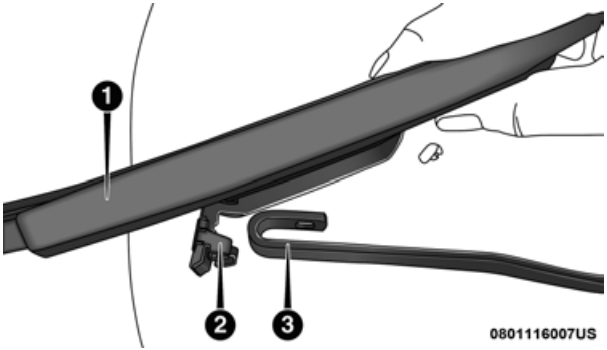

Removing Wiper From Wiper Arm

1 — Wiper
2 — Locking Tab
3 — Wiper Arm J Hook

6. Gently lower the wiper arm onto the glass.

Installing The Front Wipers

1. Lift the wiper arm off of the glass, until the wiper arm is in the full up position.
2. Position the wiper blade under the hook on the tip of the wiper arm with the wiper locking tab open.
3. Insert the receiver bracket on the wiper assembly into the hook on the tip of the arm through the opening in the wiper blade under the locking tab.
4. Slide the wiper blade up into the hook on the wiper arm until it is latched (engagement will be accompanied by an audible click). Fold down the latch release tab and snap it into its locked position.
5. Gently lower the wiper blade onto the glass.

Exhaust System

The best protection against carbon monoxide entry into the vehicle body is a properly maintained engine exhaust system.

If you notice a change in the sound of the exhaust system; or if the exhaust fumes can be detected inside the vehicle; or when the underside or rear of the vehicle is damaged; have an authorized technician inspect the complete exhaust system and adjacent body areas for broken, damaged, deteriorated, or mispositioned parts. Open seams or loose connections could permit exhaust fumes to seep into the passenger compartment. In addition, have the exhaust system inspected each time the vehicle is raised for lubrication or oil change. Replace as required.

WARNING!

- **Exhaust gases can injure or kill. They contain carbon monoxide (CO), which is colorless and odorless. Breathing it can make you unconscious and can eventually poison you. To avoid breathing CO, refer to "Safety Tips" in "Safety" for further information.**
- **A hot exhaust system can start a fire if you park over materials that can burn. Such materials might be grass or leaves coming into contact with your exhaust system. Do not park or operate your vehicle in areas where your exhaust system can contact anything that can burn.**

CAUTION!

- **The catalytic converter requires the use of unleaded fuel only. Leaded gasoline will destroy the effectiveness of the catalyst as an emissions control device and may seriously reduce engine performance and cause serious damage to the engine.**

(Continued)

CAUTION! *(Continued)*

- **Damage to the catalytic converter can result if your vehicle is not kept in proper operating condition. In the event of engine malfunction, particularly involving engine misfire or other apparent loss of performance, have your vehicle serviced promptly. Continued operation of your vehicle with a severe malfunction could cause the converter to overheat, resulting in possible damage to the converter and vehicle.**

Under normal operating conditions, the catalytic converter will not require maintenance. However, it is important to keep the engine properly tuned to assure proper catalyst operation and prevent possible catalyst damage.

NOTE:
Intentional tampering with emissions control systems can result in civil penalties being assessed against you.

In unusual situations involving grossly malfunctioning engine operation, a scorching odor may suggest severe and abnormal catalyst overheating. If this occurs, stop the vehicle, turn off the engine and allow it to cool. Service, including a tune-up to manufacturer's specifications, should be obtained immediately.

To minimize the possibility of catalytic converter damage:

- Do not interrupt the ignition when the transmission is in gear and the vehicle is in motion.
- Do not try to start the vehicle by pushing or towing the vehicle.
- Do not idle the engine with any ignition components disconnected or removed, such as when diagnostic testing, or for prolonged periods during very rough idle or malfunctioning operating conditions.

Cooling System

WARNING!

- **You or others can be badly burned by hot engine coolant (antifreeze) or steam from your radiator. If you see or hear steam coming from under the hood, do not open the hood until the radiator has had time to cool. Never open a cooling system pressure cap when the radiator or coolant bottle is hot.**
- **Keep hands, tools, clothing, and jewelry away from the radiator cooling fan when the hood is raised. The fan starts automatically and may start at any time, whether the engine is running or not.**

(Continued)

WARNING! ***(Continued)***

- **When working near the radiator cooling fan, disconnect the fan motor lead or turn the ignition to the OFF mode. The fan is temperature controlled and can start at any time the ignition is in the ON mode.**

Engine Coolant Checks

Check the engine coolant (antifreeze) protection every 12 months (before the onset of freezing weather, where applicable). If the engine coolant (antifreeze) is dirty or rusty in appearance, the system should be drained, flushed and refilled with fresh coolant. Check the front of the A/C condenser (if equipped) or radiator for any accumulation of bugs, leaves, etc. If dirty, clean by gently spraying water from a garden hose vertically down the face of the A/C condenser (if equipped) or the back of the radiator core.

Check the engine cooling system hoses for brittle rubber, cracking, tears, cuts and tightness of the connection at the coolant recovery bottle and radiator. Inspect the entire system for leaks.

DO NOT REMOVE THE COOLANT PRESSURE CAP WHEN THE COOLING SYSTEM IS HOT.

Cooling System — Drain, Flush And Refill

NOTE:
Some vehicles require special tools to add coolant properly. Failure to fill these systems properly could lead to severe internal engine damage. If any coolant is needed to be added to the system please contact an authorized dealer.

If the engine coolant (antifreeze) is dirty or contains visible sediment, have an authorized dealer clean and flush with OAT coolant (antifreeze) (conforming to MS.90032).

Refer to the "Maintenance Plan" in this section for the proper maintenance intervals.

Selection Of Coolant

Refer to "Fluids And Lubricants" in "Technical Specifications" for further information.

NOTE:

- Mixing of engine coolant (antifreeze) other than specified Organic Additive Technology (OAT) engine coolant (antifreeze), may result in engine damage and may decrease corrosion protection. Organic Additive Technology (OAT) engine coolant is different and should not be mixed with Hybrid Organic Additive Technology (HOAT) engine coolant (antifreeze) or any "globally compatible" coolant (antifreeze). If a non-OAT engine coolant (antifreeze) is introduced into the cooling system in an emergency, the cooling system will need to be drained, flushed, and refilled with fresh OAT coolant (conforming to MS.90032), by an authorized dealer as soon as possible.
- Do not use water alone or alcohol-based engine coolant (antifreeze) products. Do not use additional rust inhibitors or antirust products, as they may not be compatible with the radiator engine coolant and may plug the radiator.
- This vehicle has not been designed for use with propylene glycol-based engine coolant (antifreeze). Use of propylene glycolbased engine coolant (antifreeze) is not recommended.
- Some vehicles require special tools to add coolant properly. Failure to fill these systems properly could lead to severe internal engine damage. If any coolant is needed to be added to the system please contact an authorized dealer.

Adding Coolant

Your vehicle has been built with an improved engine coolant (OAT coolant conforming to MS.90032) that allows extended maintenance intervals. This engine coolant (antifreeze) can be used up to ten years or 150,000 miles (240,000 km) before replacement. To prevent reducing this extended maintenance period, it is important that you use the same engine coolant (OAT coolant conforming to MS.90032) throughout the life of your vehicle.

Please review these recommendations for using Organic Additive Technology (OAT) engine coolant (antifreeze) that meets the requirements of FCA Material Standard MS.90032. When adding engine coolant (antifreeze):

- We recommend using Mopar Antifreeze/Coolant 10 Year/150,000 Mile (240,000 km) Formula OAT (Organic Additive Technology) that meets the requirements of FCA Material Standard MS.90032.
- Mix a minimum solution of 50% OAT engine coolant that meets the requirements of FCA Material Standard MS.90032 and distilled water. Use higher concentrations (not to exceed 70%) if temperatures below −34°F (−37°C) are anticipated. Please contact an authorized dealer for assistance.
- Use only high purity water such as distilled or deionized water when mixing the water/engine coolant (antifreeze) solution. The use of lower quality water will reduce the amount of corrosion protection in the engine cooling system.

NOTE:

- It is the owner's responsibility to maintain the proper level of protection against freezing according to the temperatures occurring in the area where the vehicle is operated.
- Some vehicles require special tools to add coolant properly. Failure to fill these systems properly could lead to severe internal engine damage. If any coolant is needed to be added to the system, please contact a local authorized dealer.
- Mixing engine coolant (antifreeze) types is not recommended and can result in cooling system damage. If HOAT and OAT coolant are mixed in an emergency, have an authorized dealer drain, flush, and refill with OAT coolant (conforming to MS.90032) as soon as possible.

Cooling System Pressure Cap

The cap must be fully tightened to prevent loss of engine coolant (antifreeze), and to ensure that engine coolant (antifreeze) will return to the radiator from the coolant expansion bottle/recovery tank if so equipped.

The cap should be inspected and cleaned if there is any accumulation of foreign material on the sealing surfaces.

WARNING!

- **Do not open hot engine cooling system. Never add engine coolant (antifreeze) when the engine is overheated. Do not loosen or remove the cap to cool an overheated engine. Heat causes pressure to build up in the cooling system. To prevent scalding or injury, do not remove the pressure cap while the system is hot or under pressure.**
- **Do not use a pressure cap other than the one specified for your vehicle. Personal injury or engine damage may result.**

Disposal Of Used Coolant

Used ethylene glycol-based coolant (antifreeze) is a regulated substance requiring proper disposal. Check with your local authorities to determine the disposal rules for your community. To prevent ingestion by animals or children, do not store ethylene glycol-based coolant in open containers or allow it to remain in puddles on the ground. If ingested by a child or pet, seek emergency assistance immediately. Clean up any ground spills immediately.

Checking Coolant Level — 6.4L Engine

The level of the coolant in the pressurized coolant bottle should be between the “MIN” and “MAX” range on the bottle when the engine is cold.

The radiator normally remains completely full, so there is no need to remove the cap unless checking for coolant freeze point or replacing engine coolant (antifreeze). Advise your service attendant of this. As long as the engine operating temperature is satisfactory, the coolant bottle need only be checked once a month. When additional engine coolant (antifreeze) is needed to maintain the proper level, it should be added to the coolant bottle. Do not overfill.

Points To Remember

NOTE:
When the vehicle is stopped after a few miles/kilometers of operation, you may observe vapor coming from the front of the engine compartment. This is normally a result of moisture from rain, snow, or high humidity accumulating on the radiator and being vaporized when the thermostat opens, allowing hot engine coolant (antifreeze) to enter the radiator.

If an examination of your engine compartment shows no evidence of radiator or hose leaks, the vehicle may be safely driven. The vapor will soon dissipate.

- Do not overfill the coolant expansion bottle.
- Check the coolant freeze point in the radiator and in the coolant expansion bottle. If engine coolant (antifreeze) needs to be added, the contents of the coolant expansion bottle must also be protected against freezing.
- If frequent engine coolant (antifreeze) additions are required, the cooling system should be pressure tested for leaks.
- Maintain engine coolant (antifreeze) concentration at a minimum of 50% OAT coolant (conforming to MS.90032) and distilled water for proper corrosion protection of your engine which contains aluminum components.
- Make sure that the coolant expansion bottle overflow hoses are not kinked or obstructed.
- Keep the front of the radiator clean. If your vehicle is equipped with air conditioning, keep the front of the condenser clean.
- Do not change the thermostat for Summer or Winter operation. If replacement is ever necessary, install ONLY the correct type thermostat. Other designs may result in unsatisfactory engine coolant (antifreeze) performance, poor gas mileage, and increased emissions.

Brake System

In order to assure brake system performance, all brake system components should be inspected periodically. Refer to the "Maintenance Plan" in this section for the proper maintenance intervals.

WARNING!
Riding the brakes can lead to brake failure and possibly a collision. Driving with your foot resting or riding on the brake pedal can result in abnormally high brake temperatures, excessive lining wear, and possible brake damage. You would not have your full braking capacity in an emergency.

Fluid Level Check — Brake Master Cylinder

The fluid level of the master cylinder should be checked when performing under the hood service or immediately if the brake system warning lamp indicates system failure.

If necessary, add fluid to bring level within the designated marks on the side of the reservoir of the brake master cylinder. Be sure to clean the top of the master cylinder area before removing cap.

With disc brakes the fluid level can be expected to fall as the brake linings wear. However, an unexpected drop in fluid level may be caused by a leak and a system check should be conducted.

Refer to "Fluids And Lubricants" in "Technical Specifications" for further information.

WARNING!
• **Use only manufacturer's recommended brake fluid. Refer to "Fluids And Lubricants" in "Technical Specifications" for further information. Using the wrong type of brake fluid can severely damage your brake system and/or impair its performance. The proper type of brake fluid for your vehicle is also identified on the original factory installed hydraulic master cylinder reservoir.** • **To avoid contamination from foreign matter or moisture, use only new brake fluid or fluid that has been in a tightly closed container. Keep the master cylinder reservoir cap secured at all times. Brake fluid in a open container absorbs moisture from the air resulting in a lower boiling point. This may cause it to boil unexpectedly during hard or prolonged braking, resulting in sudden brake failure. This could result in a collision.**

(Continued)

WARNING! *(Continued)*

- **Overfilling the brake fluid reservoir can result in spilling brake fluid on hot engine parts, causing the brake fluid to catch fire. Brake fluid can also damage painted and vinyl surfaces, care should be taken to avoid its contact with these surfaces.**
- **Do not allow petroleum based fluid to contaminate the brake fluid. Brake seal components could be damaged, causing partial or complete brake failure. This could result in a collision.**

Automatic Transmission

Selection Of Lubricant

It is important to use the proper transmission fluid to ensure optimum transmission performance and life. Use only the manufacturer's specified transmission fluid. Refer to "Fluids And Lubricants" in "Technical Specifications". It is important to maintain the transmission fluid at the correct level using the recommended fluid. No chemical flushes should be used in any transmission; only the approved lubricant should be used.

CAUTION!

Using a transmission fluid other than the manufacturer's recommended fluid may cause deterioration in transmission shift quality and/or torque converter shudder. Refer to "Fluids, Lubricants, And Genuine Parts" in this section for fluid specifications.

Special Additives

The manufacturer strongly recommends against using any special additives in the transmission. Automatic Transmission Fluid (ATF) is an engineered product and its performance may be impaired by supplemental additives. Therefore, do not add any fluid additives to the transmission. Avoid using transmission sealers as they may adversely affect seals.

CAUTION!

Do not use chemical flushes in your transmission as the chemicals can damage your transmission components. Such damage is not covered by the New Vehicle Limited Warranty.

Fluid Level Check — Eight-Speed Transmission

The fluid level is preset at the factory and does not require adjustment under normal operating conditions. Routine fluid level checks are not required, therefore the transmission has no dipstick. An authorized dealer can check your transmission fluid level using special service tools.

If you notice fluid leakage or transmission malfunction, visit an authorized dealer immediately to have the transmission fluid level checked. Operating the vehicle with an improper fluid level can cause severe transmission damage.

CAUTION!
If a transmission fluid leak occurs, visit an authorized dealer immediately. Severe transmission damage may occur. An authorized dealer has the proper tools to adjust the fluid level accurately.

Fluid And Filter Changes — Eight-Speed Transmission

Under normal operating conditions, the fluid installed at the factory will provide satisfactory lubrication for the life of the vehicle.

Routine fluid and filter changes are not required. However, change the fluid and filter if the fluid becomes contaminated (with water, etc.), or if the transmission is disassembled for any reason.

Rear Axle And 4x4 Front Driving Axle Fluid Level

For normal service, periodic fluid level checks are not required. When the vehicle is serviced for other reasons the exterior surfaces of the axle assembly should be inspected. If gear oil leakage is suspected inspect the fluid level. Refer to "Fluids And Lubricants" in "Technical Specifications" for further information. This inspection should be made with the vehicle in a level position.

For all 2500/3500 Model axles, the fluid level should be 1/4 in ± 1/4 in (6.4 mm ± 6.4 mm) below the fill hole on the 9.25 in front, 11.5 in rear axle, and 12.0 in rear axle.

Lubricant Selection

Refer to “Fluids And Lubricants” in “Technical Specification” for further information.

NOTE:
The presence of water in the gear lubricant will result in corrosion and possible failure of differential components. Operation of the vehicle in water, as may be encountered in some off-highway types of service, will require draining and refilling the axle to avoid damage.

Limited-Slip Differentials DO REQUIRE limited slip oil additive (friction modifiers).

NOTE:
Slight noise and mild shuddering may be evident while turning a vehicle with limited slip differential on concrete or dry pavement. These conditions should be considered normal operation of the limited slip differential.

Drain And Refill

Refer to the “Maintenance Plan” for the proper maintenance intervals.

Transfer Case

Selection Of Lubricant

Use only the manufacturer's recommended fluid. Refer to “Fluids And Lubricants” in “Technical Specifications” for further information.

Fluid Level Check

This fluid level can be checked by removing the filler plug. The fluid level should be to the bottom edge of the filler plug hole with the vehicle in a level position.

Drain And Refill

Refer to the “Maintenance Plan” in this section for the proper maintenance intervals.

HOISTING

A conventional floor jack may be used at the jacking locations. Refer to the graphics that show jacking locations. However, a floor jack or frame hoist must never be used on any other parts of the underbody.

CAUTION!
Never use a floor jack directly under the differential housing of a loaded truck or damage to your vehicle may result.

TIRES

Tire Safety Information

Tire safety information will cover aspects of the following information: Tire Markings, Tire Identification Numbers, Tire Terminology and Definitions, Tire Pressures, and Tire Loading.

Tire Markings

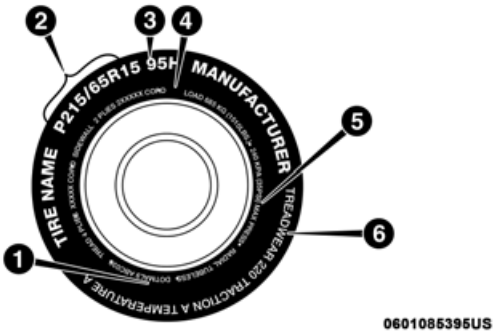

Tire Markings

1 — U.S. DOT Safety Standards Code (TIN)	4 — Maximum Load
2 — Size Designation	5 — Maximum Pressure
3 — Service Description	6 — Treadwear, Traction and Temperature Grades

NOTE:

- P (Passenger) — Metric tire sizing is based on U.S. design standards. P-Metric tires have the letter “P” molded into the sidewall preceding the size designation. Example: P215/65R15 95H.
- European — Metric tire sizing is based on European design standards. Tires designed to this standard have the tire size molded into the sidewall beginning with the section width. The letter "P" is absent from this tire size designation. Example: 215/65R15 96H.
- LT (Light Truck) — Metric tire sizing is based on U.S. design standards. The size designation for LT-Metric tires is the same as for P-Metric tires except for the letters “LT” that are molded into the sidewall preceding the size designation. Example: LT235/85R16.
- Temporary spare tires are designed for temporary emergency use only. Temporary high pressure compact spare tires have the letter “T” or “S” molded into the sidewall preceding the size designation. Example: T145/80D18 103M.
- High flotation tire sizing is based on U.S. design standards and it begins with the tire diameter molded into the sidewall. Example: 31x10.5 R15 LT.

Tire Sizing Chart

EXAMPLE:
Example Size Designation: P215/65R15XL 95H, 215/65R15 96H, LT235/85R16C, T145/80D18 103M, 31x10.5 R15 LT
P = Passenger car tire size based on U.S. design standards, or **"....blank...."** = Passenger car tire based on European design standards, or **LT** = Light truck tire based on U.S. design standards, or **T or S** = Temporary spare tire or **31** = Overall diameter in inches (in) **215, 235, 145** = Section width in millimeters (mm) **65, 85, 80** = Aspect ratio in percent (%) • Ratio of section height to section width of tire, or **10.5** = Section width in inches (in)
R = Construction code • "R" means radial construction, or • "D" means diagonal or bias construction
15, 16, 18 = Rim diameter in inches (in)
Service Description:
95 = Load Index • A numerical code associated with the maximum load a tire can carry

EXAMPLE:
H = Speed Symbol • A symbol indicating the range of speeds at which a tire can carry a load corresponding to its load index under certain operating conditions • The maximum speed corresponding to the speed symbol should only be achieved under specified operating conditions (i.e., tire pressure, vehicle loading, road conditions, and posted speed limits)
Load Identification: Absence of the following load identification symbols on the sidewall of the tire indicates a Standard Load (SL) tire: • **XL** = Extra load (or reinforced) tire, or • **LL** = Light load tire or • **C, D, E, F, G** = Load range associated with the maximum load a tire can carry at a specified pressure
Maximum Load – Maximum load indicates the maximum load this tire is designed to carry
Maximum Pressure – Maximum pressure indicates the maximum permissible cold tire inflation pressure for this tire

Tire Identification Number (TIN)

The TIN may be found on one or both sides of the tire; however, the date code may only be on one side. Tires with white sidewalls will have the full TIN, including the date code, located on the white sidewall side of the tire. Look for the TIN on the outboard side of black sidewall tires as mounted on the vehicle. If the TIN is not found on the outboard side, then you will find it on the inboard side of the tire.

EXAMPLE:
DOT MA L9 ABCD 0301
DOT = Department of Transportation • This symbol certifies that the tire is in compliance with the U.S. Department of Transportation tire safety standards and is approved for highway use
MA = Code representing the tire manufacturing location (two digits)
L9 = Code representing the tire size (two digits)
ABCD = Code used by the tire manufacturer (one to four digits)
03 = Number representing the week in which the tire was manufactured (two digits) • 03 means the 3rd week
01 = Number representing the year in which the tire was manufactured (two digits) • 01 means the year 2001 • Prior to July 2000, tire manufacturers were only required to have one number to represent the year in which the tire was manufactured. Example: 031 could represent the 3rd week of 1981 or 1991

Tire Terminology And Definitions

Term	Definition
B-Pillar	The vehicle B-Pillar is the structural member of the body located behind the front door.
Cold Tire Inflation Pressure	Cold tire inflation pressure is defined as the tire pressure after the vehicle has not been driven for at least three hours, or driven less than 1 mile (1.6 km) after sitting for a minimum of three hours. Inflation pressure is measured in units of PSI (pounds per square inch) or kPa (kilopascals).
Maximum Inflation Pressure	The maximum inflation pressure is the maximum permissible cold tire inflation pressure for this tire. The maximum inflation pressure is molded into the sidewall.
Recommended Cold Tire Inflation Pressure	Vehicle manufacturer's recommended cold tire inflation pressure as shown on the tire placard.
Tire Placard	A label permanently attached to the vehicle describing the vehicle's loading capacity, the original equipment tire sizes and the recommended cold tire inflation pressures.

Tire Loading And Tire Pressure

NOTE:
The proper cold tire inflation pressure is listed on the driver's side B-Pillar or the rear edge of the driver's side door.

Check the inflation pressure of each tire, including the spare tire (if equipped), at least monthly and inflate to the recommended pressure for your vehicle.

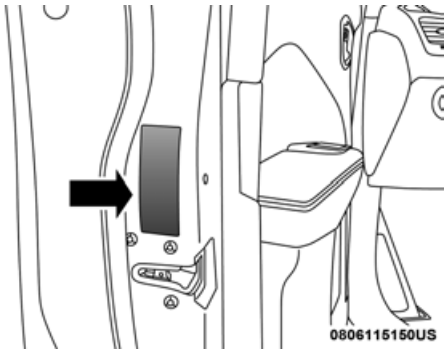

Example Tire Placard Location (Door)

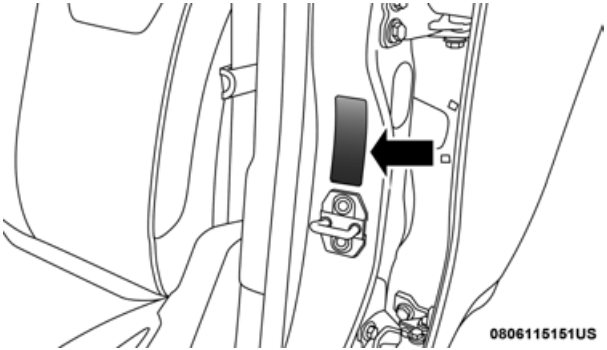

Example Tire Placard Location (B-Pillar)

Tire And Loading Information Placard

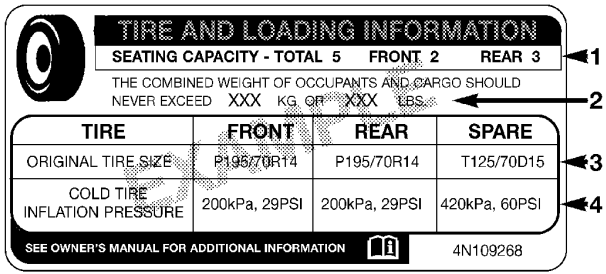

Tire And Loading Information Placard

This placard tells you important information about the:

1. Number of people that can be carried in the vehicle.
2. Total weight your vehicle can carry.
3. Tire size designed for your vehicle.
4. Cold tire inflation pressures for the front, rear, and spare tires.

Loading

The vehicle maximum load on the tire must not exceed the load carrying capacity of the tire on your vehicle. You will not exceed the tire's load carrying capacity if you adhere to the loading conditions, tire size, and cold tire inflation pressures specified on the Tire and Loading Information placard in “Vehicle Loading” in the “Starting And Operating” section of this manual.

NOTE:
Under a maximum loaded vehicle condition, gross axle weight ratings (GAWRs) for the front and rear axles must not be exceeded.

For further information on GAWRs, vehicle loading, and trailer towing, refer to “Vehicle Loading” in the “Starting And Operating” section of this manual.

To determine the maximum loading conditions of your vehicle, locate the statement “The combined weight of occupants and cargo should never exceed XXX kg or XXX lbs” on the Tire and Loading Information placard. The combined weight of occupants, cargo/luggage and trailer tongue weight (if applicable) should never exceed the weight referenced here.

Steps For Determining Correct Load Limit—

(1) Locate the statement "The combined weight of occupants and cargo should never exceed XXX kg or XXX lbs." on your vehicle's placard.

(2) Determine the combined weight of the driver and passengers that will be riding in your vehicle.

(3) Subtract the combined weight of the driver and passengers from XXX kg or XXX lbs.

(4) The resulting figure equals the available amount of cargo and luggage load capacity. For example, if "XXX" amount equals 1400 lbs. and there will be five 150 lb passengers in your vehicle, the amount of available cargo and luggage load capacity is 650 lbs. (1400-750 (5x150) = 650 lbs.)

(5) Determine the combined weight of luggage and cargo being loaded on the vehicle. That weight may not safely exceed the available cargo and luggage load capacity calculated in Step 4.

(6) If your vehicle will be towing a trailer, load from your trailer will be transferred to your vehicle. Consult this manual to determine how this reduces the available cargo and luggage load capacity of your vehicle.

Metric Example For Load Limit

For example, if "XXX" amount equals 635 kg and there will be five 68 kg passengers in your vehicle, the amount of available cargo and luggage load capacity is 295 kg (635-340 (5x68) = 295 kg) as shown in step 4.

NOTE:

- If your vehicle will be towing a trailer, load from your trailer will be transferred to your vehicle. The following table shows examples on how to calculate total load, cargo/luggage, and towing capacities of your vehicle with varying seating configurations and number and size of occupants. This table is for illustration purposes only and may not be accurate for the seating and load carry capacity of your vehicle.
- For the following example, the combined weight of occupants and cargo should never exceed 865 lbs (392 kg).

Occupants			Combined weight of occupants and cargo from Tire Placard	MINUS	Combined Occupant's weight	=	AVAILABLE Cargo/Luggage and Trailer Tongue Weight
TOTAL	FRONT	REAR					
EXAMPLE 1							
5	2	3	865 lbs	minus	Occupant 1: 200 lbs Occupant 2: 130 lbs Occupant 3: 160 lbs Occupant 4: 100 lbs Occupant 5: 80 lbs TOTAL WEIGHT: 670 lbs 670 lbs	=	195 lbs
EXAMPLE 2							
3	2	1	865 lbs	minus	Occupant 1: 210 lbs Occupant 2: 180 lbs Occupant 3: 150 lbs TOTAL WEIGHT: 540 lbs 540 lbs	=	325 lbs
EXAMPLE 3							
2	2	0	865 lbs	minus	Occupant 1: 200 lbs Occupant 2: 200 lbs TOTAL WEIGHT: 400 lbs 400 lbs	=	465 lbs

EXAMPLE

811a4d11

WARNING!

Overloading of your tires is dangerous. Overloading can cause tire failure, affect vehicle handling, and increase your stopping distance. Use tires of the recommended load capacity for your vehicle. Never overload them.

Tires — General Information

Tire Pressure

Proper tire inflation pressure is essential to the safe and satisfactory operation of your vehicle. Four primary areas are affected by improper tire pressure:

- Safety and Vehicle Stability
- Economy
- Tread Wear
- Ride Comfort

Safety

WARNING!

- **Improperly inflated tires are dangerous and can cause collisions.**
- **Underinflation increases tire flexing and can result in overheating and tire failure.**
- **Overinflation reduces a tire's ability to cushion shock. Objects on the road and chuckholes can cause damage that result in tire failure.**

(Continued)

WARNING! *(Continued)*

- **Overinflated or underinflated tires can affect vehicle handling and can fail suddenly, resulting in loss of vehicle control.**
- **Unequal tire pressures can cause steering problems. You could lose control of your vehicle.**
- **Unequal tire pressures from one side of the vehicle to the other can cause the vehicle to drift to the right or left.**
- **Always drive with each tire inflated to the recommended cold tire inflation pressure.**

Both under-inflation and over-inflation affect the stability of the vehicle and can produce a feeling of sluggish response or over responsiveness in the steering.

NOTE:

- Unequal tire pressures from side to side may cause erratic and unpredictable steering response.
- Unequal tire pressure from side to side may cause the vehicle to drift left or right.

Fuel Economy

Underinflated tires will increase tire rolling resistance resulting in higher fuel consumption.

Tread Wear

Improper cold tire inflation pressures can cause abnormal wear patterns and reduced tread life, resulting in the need for earlier tire replacement.

Ride Comfort And Vehicle Stability

Proper tire inflation contributes to a comfortable ride. Over-inflation produces a jarring and uncomfortable ride.

Tire Inflation Pressures

The proper cold tire inflation pressure is listed on the driver's side B-Pillar or rear edge of the driver's side door.

At least once a month:

- Check and adjust tire pressure with a good quality pocket-type pressure gauge. Do not make a visual judgement when determining proper inflation. Tires may look properly inflated even when they are under-inflated.
- Inspect tires for signs of tire wear or visible damage.

CAUTION!
After inspecting or adjusting the tire pressure, always reinstall the valve stem cap. This will prevent moisture and dirt from entering the valve stem, which could damage the valve stem.

Inflation pressures specified on the placard are always “cold tire inflation pressure”. Cold tire inflation pressure is defined as the tire pressure after the vehicle has not been driven for at least three hours, or driven less than 1 mile (1.6 km) after sitting for a minimum of three hours. The cold tire inflation pressure must not exceed the maximum inflation pressure molded into the tire sidewall.

Check tire pressures more often if subject to a wide range of outdoor temperatures, as tire pressures vary with temperature changes.

Tire pressures change by approximately 1 psi (7 kPa) per 12°F (7°C) of air temperature change. Keep this in mind when checking tire pressure inside a garage, especially in the Winter.

Example: If garage temperature = 68°F (20°C) and the outside temperature = 32°F (0°C) then the cold tire inflation pressure should be increased by 3 psi (21 kPa), which equals 1 psi (7 kPa) for every 12°F (7°C) for this outside temperature condition.

Tire pressure may increase from 2 to 6 psi (13 to 40 kPa) during operation. DO NOT reduce this normal pressure build up or your tire pressure will be too low.

Tire Pressures For High Speed Operation

The manufacturer advocates driving at safe speeds and within posted speed limits. Where speed limits or conditions are such that the vehicle can be driven at high speeds, maintaining correct tire inflation pressure is very important. Increased tire pressure and reduced vehicle loading may be required for high-speed vehicle operation. Refer to an authorized tire dealer or original equipment vehicle dealer for recommended safe operating speeds, loading and cold tire inflation pressures.

WARNING!

High speed driving with your vehicle under maximum load is dangerous. The added strain on your tires could cause them to fail. You could have a serious collision. Do not drive a vehicle loaded to the maximum capacity at continuous speeds above 75 mph (120 km/h).

Radial Ply Tires

WARNING!

Combining radial ply tires with other types of tires on your vehicle will cause your vehicle to handle poorly. The instability could cause a collision. Always use radial ply tires in sets of four. Never combine them with other types of tires.

Tire Repair

If your tire becomes damaged, it may be repaired if it meets the following criteria:

- The tire has not been driven on when flat.
- The damage is only on the tread section of your tire (sidewall damage is not repairable).
- The puncture is no greater than a ¼ of an inch (6 mm).

Consult an authorized tire dealer for tire repairs and additional information.

Damaged Run Flat tires, or Run Flat tires that have experienced a loss of pressure should be replaced immediately with another Run Flat tire of identical size and service description (Load Index and Speed Symbol). Replace the tire pressure sensor as well as it is not designed to be reused.

Run Flat Tires — If Equipped

Run Flat tires allow you the capability to drive 50 miles (80 km) at 50 mph (80 km/h) after a rapid loss of inflation pressure. This rapid loss of inflation is referred to as the Run Flat mode. A Run Flat mode occurs when the tire inflation pressure is of/or below 14 psi (96 kPa). Once a Run Flat tire reaches the run flat mode it has limited driving capabilities and needs to be replaced immediately. A Run Flat tire is not repairable. When a run flat tire is changed after driving with underinflated tire condition, please replace the TPM sensor as it is not designed to be reused when driven under run flat mode (14 psi (96 kPa)) condition.

NOTE:
TPM Sensor must be replaced after driving the vehicle on a flat tire condition.

It is not recommended driving a vehicle loaded at full capacity or to tow a trailer while a tire is in the run flat mode.

See the tire pressure monitoring section for more information.

Tire Spinning

When stuck in mud, sand, snow, or ice conditions, do not spin your vehicle's wheels above 30 mph (48 km/h) or for longer than 30 seconds continuously without stopping.

Refer to “Freeing A Stuck Vehicle” in “In Case Of Emergency” for further information.

WARNING!
Fast spinning tires can be dangerous. Forces generated by excessive wheel speeds may cause tire damage or failure. A tire could explode and injure someone. Do not spin your vehicle's wheels faster than 30 mph (48 km/h) for more than 30 seconds continuously when you are stuck, and do not let anyone near a spinning wheel, no matter what the speed.

Tread Wear Indicators

Tread wear indicators are in the original equipment tires to help you in determining when your tires should be replaced.

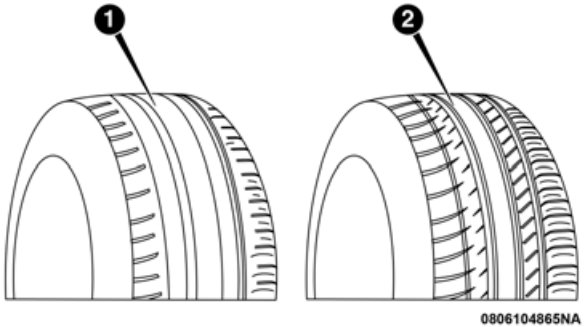

Tire Tread

1 — Worn Tire
2 — New Tire

These indicators are molded into the bottom of the tread grooves. They will appear as bands when the tread depth becomes a 1/16 of an inch (1.6 mm). When the tread is worn to the tread wear indicators, the tire should be replaced.

Refer to "Replacement Tires" in this section for further information.

Life Of Tire

The service life of a tire is dependent upon varying factors including, but not limited to:

- Driving style.
- Tire pressure - Improper cold tire inflation pressures can cause uneven wear patterns to develop across the tire tread. These abnormal wear patterns will reduce tread life, resulting in the need for earlier tire replacement.
- Distance driven.
- Performance tires, tires with a speed rating of V or higher, and Summer tires typically have a reduced tread life. Rotation of these tires per the vehicle scheduled maintenance is highly recommended.

WARNING!
Tires and the spare tire should be replaced after six years, regardless of the remaining tread. Failure to follow this warning can result in sudden tire failure. You could lose control and have a collision resulting in serious injury or death.

NOTE:
Wheel Valve Stem must be replaced as well when installing new tires due to wear and tear in existing tires.

Keep dismounted tires in a cool, dry place with as little exposure to light as possible. Protect tires from contact with oil, grease, and gasoline.

Replacement Tires

The tires on your new vehicle provide a balance of many characteristics. They should be inspected regularly for wear and correct cold tire inflation pressures. The manufacturer strongly recommends that you use tires equivalent to the originals in size, quality and performance when replacement is needed. Refer to the paragraph on "Tread Wear Indicators" in this section. Refer to the Tire and Loading Information placard or the Vehicle Certification Label for the size designation of your tire. The Load Index and Speed Symbol for your tire will be found on the original equipment tire sidewall.

See the Tire Sizing Chart example found in the "Tire Safety Information" section of this manual for more information relating to the Load Index and Speed Symbol of a tire.

It is recommended to replace the two front tires or two rear tires as a pair. Replacing just one tire can seriously affect your vehicle's handling. If you ever replace a wheel, make sure that the wheel's specifications match those of the original wheels.

It is recommended you contact an authorized tire dealer or original equipment dealer with any questions you may have on tire specifications or capability. Failure to use equivalent replacement tires may adversely affect the safety, handling, and ride of your vehicle.

WARNING!

- **Do not use a tire, wheel size, load rating, or speed rating other than that specified for your vehicle. Some combinations of unapproved tires and wheels may change suspension dimensions and performance characteristics, resulting in changes to steering, handling, and braking of your vehicle. This can cause unpredictable handling and stress to steering and suspension components. You could lose control and have a collision resulting in serious injury or death. Use only the tire and wheel sizes with load ratings approved for your vehicle.**

(Continued)

WARNING! *(Continued)*

- **Never use a tire with a smaller load index or capacity, other than what was originally equipped on your vehicle. Using a tire with a smaller load index could result in tire overloading and failure. You could lose control and have a collision.**
- **Failure to equip your vehicle with tires having adequate speed capability can result in sudden tire failure and loss of vehicle control.**

CAUTION!

Replacing original tires with tires of a different size may result in false speedometer and odometer readings.

Tire Types

All Season Tires — If Equipped

All Season tires provide traction for all seasons (Spring, Summer, Fall, and Winter). Traction levels may vary between different all season tires. All season tires can be identified by the M+S, M&S, M/S or MS designation on the tire sidewall. Use all season tires only in sets of four; failure to do so may adversely affect the safety and handling of your vehicle.

Summer Or Three Season Tires — If Equipped

Summer tires provide traction in both wet and dry conditions, and are not intended to be driven in snow or on ice. If your vehicle is equipped with Summer tires, be aware these tires are not designed for Winter or cold driving conditions. Install Winter tires on your vehicle when ambient temperatures are less than 40°F (5°C) or if roads are covered with ice or snow. For more information, contact an authorized dealer.

Summer tires do not contain the all season designation or mountain/snowflake symbol on the tire sidewall. Use Summer tires only in sets of four; failure to do so may adversely affect the safety and handling of your vehicle.

WARNING!

Do not use Summer tires in snow/ice conditions. You could lose vehicle control, resulting in severe injury or death. Driving too fast for conditions also creates the possibility of loss of vehicle control.

Snow Tires

Some areas of the country require the use of snow tires during the Winter. Snow tires can be identified by a "mountain/snowflake" symbol on the tire sidewall.

If you need snow tires, select tires equivalent in size and type to the original equipment tires. Use snow tires only in sets of four; failure to do so may adversely affect the safety and handling of your vehicle.

Snow tires generally have lower speed ratings than what was originally equipped with your vehicle and should not be operated at sustained speeds over 75 mph (120 km/h). For speeds above 75 mph (120 km/h) refer to original equipment or an authorized tire dealer for recommended safe operating speeds, loading and cold tire inflation pressures.

While studded tires improve performance on ice, skid and traction capability on wet or dry surfaces may be poorer than that of non-studded tires. Some states prohibit studded tires; therefore, local laws should be checked before using these tire types.

Spare Tires — If Equipped

NOTE:
For vehicles equipped with Tire Service Kit instead of a spare tire, please refer to "Tire Service Kit" in "In Case Of Emergency" for further information.

CAUTION!
Because of the reduced ground clearance, do not take your vehicle through an automatic car wash with a compact or limited use temporary spare installed. Damage to the vehicle may result.

Refer to the "Towing Requirements - Tires" in "Starting And Operating" for restrictions when towing with a spare tire designated for temporary emergency use.

Spare Tire Matching Original Equipped Tire And Wheel — If Equipped

Your vehicle may be equipped with a spare tire and wheel equivalent in look and function to the original equipment tire and wheel found on the front or rear axle of your vehicle. This spare tire may be used in the tire rotation for your vehicle. If your vehicle has this option, refer to an authorized tire dealer for the recommended tire rotation pattern.

Compact Spare Tire — If Equipped

The compact spare is for temporary emergency use only. You can identify if your vehicle is equipped with a compact spare by looking at the spare tire description on the Tire and Loading Information Placard located on the driver's side door opening or on the sidewall of the tire. Compact spare tire descriptions begin with the letter "T" or "S" preceding the size designation. Example: T145/80D18 103M.

T, S = Temporary Spare Tire

Since this tire has limited tread life, the original equipment tire should be repaired (or replaced) and reinstalled on your vehicle at the first opportunity.

Do not install a wheel cover or attempt to mount a conventional tire on the compact spare wheel, since the wheel is designed specifically for the compact spare tire. Do not install more than one compact spare tire and wheel on the vehicle at any given time.

WARNING!
Compact and collapsible spares are for temporary emergency use only. With these spares, do not drive more than 50 mph (80 km/h). Temporary use spares have limited tread life. When the tread is worn to the tread wear indicators, the temporary use spare tire needs to be replaced. Be sure to follow the warnings, which apply to your spare. Failure to do so could result in spare tire failure and loss of vehicle control.

Collapsible Spare Tire — If Equipped

The collapsible spare is for temporary emergency use only. You can identify if your vehicle is equipped with a collapsible spare by looking at the spare tire description on the Tire and Loading Information Placard located on the driver's side door opening or on the sidewall of the tire.

Collapsible spare tire description example: 165/80-17 101P.

Since this tire has limited tread life, the original equipment tire should be repaired (or replaced) and reinstalled on your vehicle at the first opportunity.

Inflate collapsible tire only after the wheel is properly installed to the vehicle. Inflate the collapsible tire using the electric air pump before lowering the vehicle.

Do not install a wheel cover or attempt to mount a conventional tire on the collapsible spare wheel, since the wheel is designed specifically for the collapsible spare tire.

WARNING!
Compact and Collapsible spares are for temporary emergency use only. With these spares, do not drive more than 50 mph (80 km/h). Temporary use spares have limited tread life. When the tread is worn to the tread wear indicators, the temporary use spare tire needs to be replaced. Be sure to follow the warnings, which apply to your spare. Failure to do so could result in spare tire failure and loss of vehicle control.

Full Size Spare — If Equipped

The full size spare is for temporary emergency use only. This tire may look like the originally equipped tire on the front or rear axle of your vehicle, but it is not. This spare tire may have limited tread life. When the tread is worn to the tread wear indicators, the temporary use full size spare tire needs to be replaced. Since it is not the same as your original equipment tire, replace (or repair) the original equipment tire and reinstall on the vehicle at the first opportunity.

Limited Use Spare — If Equipped

The limited use spare tire is for temporary emergency use only. This tire is identified by a label located on the limited use spare wheel. This label contains the driving limitations for this spare. This tire may look like the original equipped tire on the front or rear axle of your vehicle, but it is not. Installation of this limited use spare tire affects vehicle handling. Since it is not the same as your original equipment tire, replace (or repair) the original equipment tire and reinstall on the vehicle at the first opportunity.

WARNING!
Limited use spares are for emergency use only. Installation of this limited use spare tire affects vehicle handling. With this tire, do not drive more than the speed listed on the limited use spare wheel. Keep inflated to the cold tire inflation pressures listed on your Tire and Loading Information Placard located on the driver's side B-Pillar or the rear edge of the driver's side door. Replace (or repair) the original equipment tire at the first opportunity and reinstall it on your vehicle. Failure to do so could result in loss of vehicle control.

Wheel And Wheel Trim Care

All wheels and wheel trim, especially aluminum and chrome plated wheels, should be cleaned regularly using mild (neutral Ph) soap and water to maintain their luster and to prevent corrosion. Wash wheels with the same soap solution recommended for the body of the vehicle and remember to always wash when the surfaces are not hot to the touch.

Your wheels are susceptible to deterioration caused by salt, sodium chloride, magnesium chloride, calcium chloride, etc., and other road chemicals used to melt ice or control dust on dirt roads. Use a soft cloth or sponge and mild soap to wipe away promptly. Do not use harsh chemicals or a stiff brush. They can damage the wheel's protective coating that helps keep them from corroding and tarnishing.

CAUTION!
Avoid products or automatic car washes that use acidic solutions or strong alkaline additives or harsh brushes. Many aftermarket wheel cleaners and automatic car washes may damage the wheel's protective finish. Such damage is not covered by the New Vehicle Limited Warranty. Only car wash soap, Mopar Wheel Cleaner or equivalent is recommended.

When cleaning extremely dirty wheels including excessive brake dust, care must be taken in the selection of tire and wheel cleaning chemicals and equipment to prevent damage to the wheels. Mopar Wheel Treatment or Mopar Chrome Cleaner or their equivalent is recommended or select a non-abrasive, non-acidic cleaner for aluminum or chrome wheels.

CAUTION!
Do not use scouring pads, steel wool, a bristle brush, metal polishes or oven cleaner. These products may damage the wheel's protective finish. Such damage is not covered by the New Vehicle Limited Warranty. Only car wash soap, Mopar Wheel Cleaner or equivalent is recommended.

NOTE:
If you intend parking or storing your vehicle for an extended period after cleaning the wheels with wheel cleaner, drive your vehicle and apply the brakes to remove the water droplets from the brake components. This activity will remove the red rust on the brake rotors and prevent vehicle vibration when braking.

Dark Vapor Chrome, Black Satin Chrome, or Low Gloss Clear Coat Wheels

CAUTION!
If your vehicle is equipped with these specialty wheels, DO NOT USE wheel cleaners, abrasives, or polishing compounds. They will permanently damage this finish and such damage is not covered by the New Vehicle Limited Warranty. HAND WASH ONLY USING MILD SOAP AND WATER WITH A SOFT CLOTH. Used on a regular basis; this is all that is required to maintain this finish.

Tire Chains (Traction Devices)

Use of traction devices require sufficient tire-to-body clearance. Follow these recommendations to guard against damage.

- Traction device must be of proper size for the tire, as recommended by the traction device manufacturer.

Please follow the table below for proper tire size, chain type, and axle recommendations:

Vehicle	Axle Recommendations	Tire Sizes	Chain Class
2500 Models	Rear Only	LT245/70R17E LT275/70R18E	U Class
2500 Power Wagon Models	Rear Only	LT285/70R17D	U Class
3500 (Single Rear Wheel) Models	Rear Only	LT275/70R18E	U Class
3500 (Dual Rear Wheel) Models	Front/Rear	LT235/80R17E	U Class

WARNING!
Using tires of different size and type (M+S, Snow) between front and rear axles can cause unpredictable handling. You could lose control and have a collision.

CAUTION!

To avoid damage to your vehicle or tires, observe the following precautions:

- **Because of restricted traction device clearance between tires and other suspension components, it is important that only traction devices in good condition are used. Broken devices can cause serious damage. Stop the vehicle immediately if noise occurs that could indicate device breakage. Remove the damaged parts of the device before further use.**
- **Install device as tightly as possible and then retighten after driving about ½ mile (0.8 km).**
- **Do not exceed 30 mph (48 km/h).**
- **Drive cautiously and avoid severe turns and large bumps, especially with a loaded vehicle.**
- **Do not drive for a prolonged period on dry pavement.**
- **Observe the traction device manufacturer's instructions on the method of installation, operating speed, and conditions for use. Always use the suggested operating speed of the device manufacturer's if it is less than 30 mph (48 km/h).**
- **Do not use traction devices on a compact spare tire.**

Tire Rotation Recommendations

Tires on the front and rear axles of vehicles operate at different loads and perform different steering, driving, and braking functions. For these reasons, they wear at unequal rates.

These effects can be reduced by timely rotation of tires. The benefits of rotation are especially worthwhile with aggressive tread designs such as those on all season type tires. Rotation will increase tread life, help to maintain mud, snow and wet traction levels and contribute to a smooth, quiet ride.

Refer to the "Maintenance Plan" for the proper maintenance intervals. More frequent rotation is permissible if desired. The reasons for any rapid or unusual wear should be corrected prior to rotation being performed.

The suggested rotation method is the "rearward cross" shown in the following diagram. This rotation pattern does not apply to some directional tires that must not be reversed.

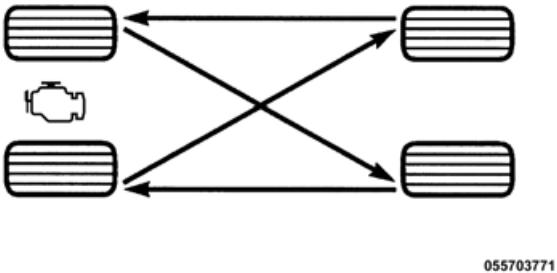

Tire Rotation

Dual Rear Wheels — If Equipped

The tires used on dual wheel assemblies should be matched for wear to prevent overloading one tire in a set. To check if tires are even, lay a straight edge across all four tires. The straight edge should touch all the tires.

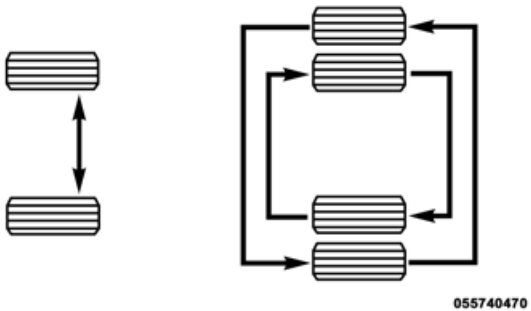

Tire Rotation

NOTE:
If your vehicle is equipped with a Tire Pressure Information System (TPIS):

- The Tire Pressure Information System (TPIS) uses unique sensors in the inner rear wheels to help identify them from the outer rear wheels, because of this, the inner and outer wheel locations can't be switched.
- After a tire rotation is completed, as shown below, the system can auto learn the locations of each sensor ID. Auto learning/localization occurs when the vehicle ignition status is changed from Off to On and speeds of greater than 5 mph (8km/h) are obtained and remain over 5 mph (8km/h) for at about a 15 minute period. You may need to drive for 20 minutes to account slower speeds and stops.
- If the tires are rotated incorrectly, The auto localization of the TPIS sensors will fail to locate correctly resulting in incorrect locations for the pressure values displayed in the instrument cluster.

CAUTION!

- **3500 Dual Rear Tires may only have one approved direction of rotation. This is to accommodate the asymmetrical design (tread pattern) of the On/Off-Road tire and the use of Outline White Letter (OWL) tires.**

(Continued)

CAUTION! *(Continued)*

- **When replacing a flat, the spare tire may have to be remounted on the rim, or installed at a different location, to maintain the correct placement of the tire on the wheel relative to the tire/wheel position on the truck. For example, if the spare is used to replace an outer rear tire it will have to be remounted on the rim so that the wheel is dished inward. That way the tread design of asymmetrical tires and the white writing of the OWL tires will maintain proper position.**

DEPARTMENT OF TRANSPORTATION UNIFORM TIRE QUALITY GRADES

The following tire grading categories were established by the National Highway Traffic Safety Administration. The specific grade rating assigned by the tire's manufacturer in each category is shown on the sidewall of the tires on your vehicle.

All passenger vehicle tires must conform to Federal safety requirements in addition to these grades.

Treadwear

The Treadwear grade is a comparative rating, based on the wear rate of the tire when tested under controlled conditions on a specified government test course. For example, a tire graded 150 would wear one and one-half times as well on the government course as a tire graded 100. The relative performance of tires depends upon the actual conditions of their use, however, and may depart significantly from the norm due to variations in driving habits, service practices, and differences in road characteristics and climate.

Traction Grades

The Traction grades, from highest to lowest, are AA, A, B, and C. These grades represent the tire's ability to stop on wet pavement, as measured under controlled conditions on specified government test surfaces of asphalt and concrete. A tire marked C may have poor traction performance.

WARNING!
The traction grade assigned to this tire is based on straight-ahead braking traction tests, and does not include acceleration, cornering, hydroplaning, or peak traction characteristics.

Temperature Grades

The Temperature grades are A (the highest), B, and C, representing the tire's resistance to the generation of heat and its ability to dissipate heat, when tested under controlled conditions on a specified indoor laboratory test wheel.

Sustained high temperature can cause the material of the tire to degenerate and reduce tire life, and excessive temperature can lead to sudden tire failure. The grade C corresponds to a level of performance, which all passenger vehicle tires must meet under the Federal Motor Vehicle Safety Standard No. 109. Grades B and A represent higher levels of performance on the laboratory test wheel, than the minimum required by law.

WARNING!
The temperature grade for this tire is established for a tire that is properly inflated and not overloaded. Excessive speed, under-inflation, or excessive loading, either separately or in combination, can cause heat buildup and possible tire failure.

STORING THE VEHICLE

If you are storing your vehicle for more than 21 days, we recommend that you take the following steps to minimize the drain on your vehicle's battery:

- Disconnect the negative cable from battery.
- Any time you store your vehicle or keep it out of service (i.e., vacation) for two weeks or more, run the air conditioning system at idle for about five minutes in the fresh air and high blower setting. This will ensure adequate system lubrication to minimize the possibility of compressor damage when the system is started again.

BODYWORK

Protection From Atmospheric Agents

Vehicle body care requirements vary according to geographic locations and usage. Chemicals that make roads passable in snow and ice and those that are sprayed on trees and road surfaces during other seasons are highly corrosive to the metal in your vehicle. Outside parking, which exposes your vehicle to airborne contaminants, road surfaces on which the vehicle is operated, extreme hot or cold weather and other extreme conditions will have an adverse effect on paint, metal trim, and underbody protection.

The following maintenance recommendations will enable you to obtain maximum benefit from the corrosion resistance built into your vehicle.

What Causes Corrosion?

Corrosion is the result of deterioration or removal of paint and protective coatings from your vehicle.

The most common causes are:

- Road salt, dirt and moisture accumulation.
- Stone and gravel impact.

- Insects, tree sap and tar.
- Salt in the air near seacoast localities.
- Atmospheric fallout/industrial pollutants.

Body And Underbody Maintenance

Cleaning Headlights

Your vehicle is equipped with plastic headlights and fog lights that are lighter and less susceptible to stone breakage than glass headlights.

Plastic is not as scratch resistant as glass and therefore different lens cleaning procedures must be followed.

To minimize the possibility of scratching the lenses and reducing light output, avoid wiping with a dry cloth. To remove road dirt, wash with a mild soap solution followed by rinsing.

Do not use abrasive cleaning components, solvents, steel wool or other aggressive material to clean the lenses.

Tri-Fold Soft Tonneau Cover Care

For cleaning and protecting the vinyl Tri-Fold Tonneau cover, use Mopar Whitewall & Vinyl Top Cleaner and Mopar Leather and Vinyl Conditioner/Protectant.

Preserving The Bodywork

Washing

- Wash your vehicle regularly. Always wash your vehicle in the shade using Mopar Car Wash, or a mild car wash soap, and rinse the panels completely with clear water.
- If insects, tar, or other similar deposits have accumulated on your vehicle, use Mopar Super Kleen Bug and Tar Remover to remove.
- Use a high quality cleaner wax, such as Mopar Cleaner Wax to remove road film, stains and to protect your paint finish. Take care never to scratch the paint.
- Avoid using abrasive compounds and power buffing that may diminish the gloss or thin out the paint finish.

CAUTION!

- **Do not use abrasive or strong cleaning materials such as steel wool or scouring powder that will scratch metal and painted surfaces.**
- **Use of power washers exceeding 1,200 psi (8,274 kPa) can result in damage or removal of paint and decals.**

Bumper Care

The customer is responsible to clean and maintain the chrome components of the vehicle. Washing away road debris and salt using an automotive soap. Bumpers should be cleaned regularly using mild (neutral Ph) soap and water to maintain their luster and to prevent corrosion.

Your bumpers are susceptible to deterioration caused by salt, sodium chloride, magnesium chloride, calcium chloride, etc., and other road chemicals used to melt ice or control dust on dirt roads. Do not use harsh chemicals or a stiff brush. They can stain or damage the protective coating that helps keep them from corroding and tarnishing.

CAUTION!
Do not use scouring pads, steel wool, a bristle brush, metal polishes, or oven cleaner. These products may damage the bumper's protective finish. Such damage is not covered by the New Vehicle Limited Warranty. Only car wash soap, Mopar Chrome Cleaner, or equivalent is recommended.

(Continued)

CAUTION! *(Continued)*
Avoid products or automatic car washes that use acidic solutions, strong alkaline additives, or harsh brushes. Many aftermarket cleaners and automatic car washes may damage the bumper's protective finish. Such damage is not covered by the New Vehicle Limited Warranty. Only car wash soap, Mopar Chrome Cleaner, or equivalent is recommended.

Special Care

- If you drive on salted or dusty roads or if you drive near the ocean, hose off the undercarriage at least once a month.
- It is important that the drain holes in the lower edges of the doors, rocker panels, and trunk be kept clear and open.
- If you detect any stone chips or scratches in the paint, touch them up immediately. The cost of such repairs is considered the responsibility of the owner.
- If your vehicle is damaged due to a collision or similar cause that destroys the paint and protective coating, have your vehicle repaired as soon as possible. The cost of such repairs is considered the responsibility of the owner.

- If you carry special cargo such as chemicals, fertilizers, de-icer salt, etc., be sure that such materials are well packaged and sealed.
- If a lot of driving is done on gravel roads, consider mud or stone shields behind each wheel.
- Use Mopar Touch Up Paint on scratches as soon as possible. An authorized dealer has touch up paint to match the color of your vehicle.

Spray-On Bedliner – If Equipped

During ownership, the shine and luster of the Spray-On Bedliner can fade from oxidation, road dirt, heavy-duty hauling and hard water stains. Weathering and UV exposure will lead to fading, dulling, and loss of gloss over time.

To help maintain the appearance of your Spray-On Bedliner, the manufacturer recommends you periodically rinse all loose dirt from your truck bed and clean your truck at least twice per year using the Mopar Spray-On Bedliner Conditioner available at your local authorized dealer.

To Help Maintain The Appearance Of Your Spray-On Bedliner, Follow The Steps Below:

1. Rinse your truck bed out with water to remove any loose dirt and debris.
2. Mix a mild soap or detergent with water with a soft cloth or brush.
3. Rinse bedliner with water.
4. Once dry, apply a small amount of Mopar Spray-On Bedliner Conditioner to a moist towel or sponge and wipe over the entire surface of the truck bedliner.

WARNING!
Do not use silicon-based protection products to clean your bedliner. Silicon-based products can become slippery and may result in personal injury.

Spray-On Bedliners are chemically-resistant to many different types of chemicals (including gasoline, oil, hydraulic fluids) for short periods of time. If a spill occurs on your Spray-On Bedliner, rinse the truck out as soon as possible to avoid permanent damage.

Repairing The Spray-On Bedliner

While extremely tough, it is possible to damage a Spray-On Bedliner. One common condition is when loading a heavy pallet and dragging that pallet across the floor of the bed. If a nail or sharp point is exposed under the weight of the pallet a scratch or tear is possible. While not covered by your new vehicle warranty, a cosmetic fix to cover the metal exposed by the scratch is required. To repair a tear or gouge, follow the directions provided in the Mopar Quick Repair Kit.

INTERIORS

Seats And Fabric Parts

Use Mopar Total Clean to clean fabric upholstery and carpeting.

WARNING!
Do not use volatile solvents for cleaning purposes. Many are potentially flammable, and if used in closed areas they may cause respiratory harm.

Stain Repel Fabric Cleaning Procedure — If Equipped

Stain Repel seats may be cleaned in the following manner:

- Remove as much of the stain as possible by blotting with a clean, dry towel.
- Blot any remaining stain with a clean, damp towel.
- For tough stains, apply Mopar Total Clean, or a mild soap solution to a clean, damp cloth and remove stain. Use a fresh, damp towel to remove soap residue.
- For grease stains, apply Mopar Multi-Purpose Cleaner to a clean, damp cloth and remove stain. Use a fresh, damp towel to remove soap residue.
- Do not use any harsh solvents or any other form of protectants on Stain Repel products.

Seat Belt Maintenance

Do not bleach, dye or clean the belts with chemical solvents or abrasive cleaners. This will weaken the fabric. Sun damage can also weaken the fabric.

If the belts need cleaning, use a mild soap solution or lukewarm water. Do not remove the belts from the vehicle to wash them. Dry with a soft cloth.

Replace the belts if they appear frayed or worn or if the buckles do not work properly.

NOTE:
If the belts retract slowly, inspect the upper turning loop for soiling. If soiling is present, clean with a wet soft cloth until all residue is removed.

WARNING!
A frayed or torn belt could rip apart in a collision and leave you with no protection. Inspect the belt system periodically, checking for cuts, frays, or loose parts. Damaged parts must be replaced immediately. Do not disassemble or modify the system. Seat belt assemblies must be replaced after a collision if they have been damaged (i.e., bent retractor, torn webbing, etc.).

Plastic And Coated Parts

Use Mopar Total Clean to clean vinyl upholstery.

CAUTION!
• **Direct contact of air fresheners, insect repellents, suntan lotions, or hand sanitizers to the plastic, painted, or decorated surfaces of the interior may cause permanent damage. Wipe away immediately.** • **Damage caused by these type of products may not be covered by your New Vehicle Limited Warranty.**

Cleaning Plastic Instrument Cluster Lenses

The lenses in front of the instruments in this vehicle are molded in clear plastic. When cleaning the lenses, care must be taken to avoid scratching the plastic.

1. Clean with a wet soft cloth. A mild soap solution may be used, but do not use high alcohol content or abrasive cleaners. If soap is used, wipe clean with a clean damp cloth.
2. Dry with a soft cloth.

Leather Parts

Mopar Total Clean is specifically recommended for leather upholstery.

Your leather upholstery can be best preserved by regular cleaning with a damp soft cloth. Small particles of dirt can act as an abrasive and damage the leather upholstery and should be removed promptly with a damp cloth. Stubborn soils can be removed easily with a soft cloth and Mopar Total Clean. Care should be taken to avoid soaking your leather upholstery with any liquid. Please do not use polishes, oils, cleaning fluids, solvents, detergents, or ammonia-based cleaners to clean your leather upholstery. Application of a leather conditioner is not required to maintain the original condition.

NOTE:
If equipped with light colored leather, it tends to show any foreign material, dirt, and fabric dye transfer more so than darker colors. The leather is designed for easy cleaning, and FCA recommends Mopar total care leather cleaner applied on a cloth to clean the leather seats as needed.

CAUTION!
Do not use Alcohol and Alcohol-based and/or Ketone based cleaning products to clean leather upholstery, as damage to the upholstery may result.

Glass Surfaces

All glass surfaces should be cleaned on a regular basis with Mopar Glass Cleaner, or any commercial household-type glass cleaner. Never use an abrasive type cleaner. Use caution when cleaning the inside rear window equipped with electric defrosters or windows equipped with radio antennas. Do not use scrapers or other sharp instruments that may scratch the elements.

When cleaning the rear view mirror, spray cleaner on the towel or cloth that you are using. Do not spray cleaner directly on the mirror.

TECHNICAL SPECIFICATIONS

IDENTIFICATION DATA

Vehicle Identification Number

The Vehicle Identification Number (VIN) is found on the left front corner of the instrument panel, visible through the windshield. This number also appears on the vehicle frame etched on right hand center rail, as well as the Automobile Information Disclosure Label affixed to a window on your vehicle, the vehicle registration and title.

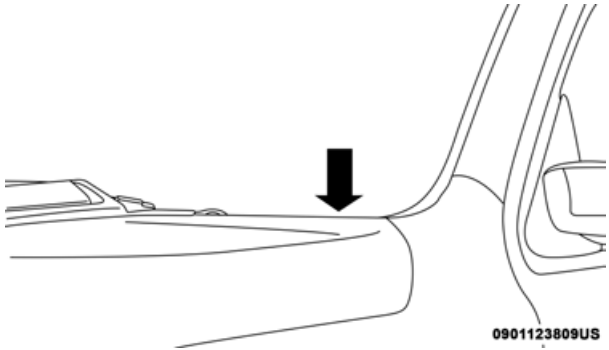

Vehicle Identification Number

NOTE:
It is illegal to remove or alter the VIN.

BRAKE SYSTEM

If power assist is lost for any reason (for example, repeated brake applications with the engine off), the brakes will still function. However, you will experience a substantial increase in braking effort to stop the vehicle.

If either the front or rear hydraulic system loses normal braking capability, the remaining system will still function with some loss of overall braking effectiveness. This will be evident by increased pedal travel during application, greater pedal force required to slow or stop, and activation of the "Brake Warning Light" and the "ABS Warning Light" (if equipped) during brake use.

Hydraulic Brake Assist — 2500/3500 Models Only (Except Power Wagon)

The brake system power assist is provided by a hydro-boost unit which shares fluid with the power steering system. You may experience some clicking or hissing noises from the hydro-boost system during hard braking conditions.

NOTE:
Under cold temperatures, pedal effort will be higher than normal until the power steering fluid reaches operating temperature.

WHEEL AND TIRE TORQUE SPECIFICATIONS

Proper lug nut/bolt torque is very important to ensure that the wheel is properly mounted to the vehicle. Any time a wheel has been removed and reinstalled on the vehicle, the lug nuts/bolts should be torqued using a properly calibrated torque wrench using a high quality six sided (hex) deep wall socket.

Torque Specifications

Lug Nut/Bolt Torque	Lug Nut/Bolt Type	**Lug Nut/ Bolt Size	Lug Nut/Bolt Socket Size
130 Ft-Lbs (176 N·m)	Cone	M14 x 1.50	22 mm
140 Ft-Lbs (190 N·m)	Flanged		

**Use only your authorized dealer recommended lug nuts/ bolts and clean or remove any dirt or oil before tightening.

NOTE:
Dual wheels are flat mounted, center piloted. The lug nuts are a two-piece assembly. When the tires are being rotated or replaced, clean these lug nuts and add two drops of oil at the interface between the lug nut/bolt and the washer. **Do not oil wheel studs.**

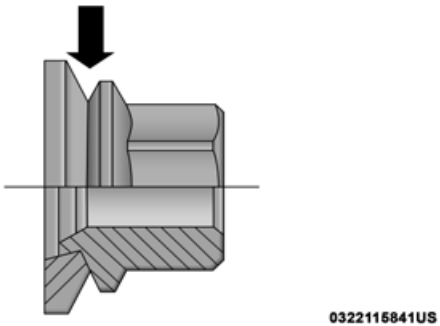

Two-Piece Lug Nut

Inspect the wheel mounting surface prior to mounting the tire and remove any corrosion or loose particles.

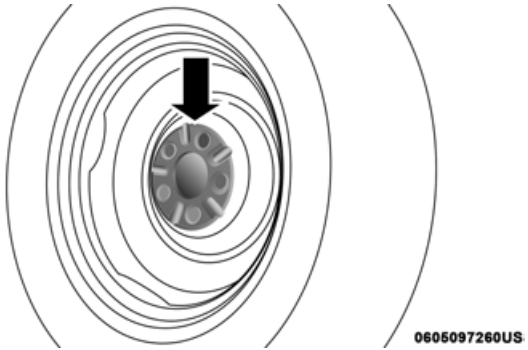

Wheel Mounting Surface

Tighten the lug nuts/bolts in a star pattern until each nut/bolt has been tightened twice. Ensure that the socket is fully engaged on the lug nut/bolt (do not insert it halfway).

After 25 miles (40 km), check the lug nut/bolt torque to be sure that all the lug nuts/bolts are properly seated against the wheel.

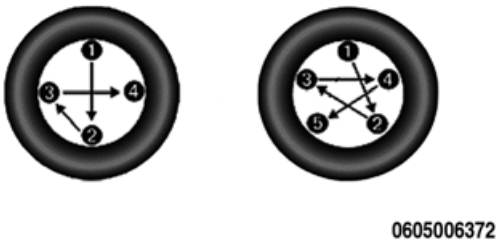

Four And Five Lug Nuts/Bolts Torque Pattern

WARNING!
To avoid the risk of forcing the vehicle off the jack, do not tighten the lug nuts/bolts fully until the vehicle has been lowered. Failure to follow this warning may result in personal injury.

FUEL REQUIREMENTS

6.4L Engine

Do not use E-85 flex fuel or ethanol blends greater than 15% in this engine.

This engines is designed to meet all emissions regulations and provide satisfactory fuel economy and performance when using high quality unleaded gasoline having a posted octane number range of 87 to 89 as specified by the (R+M)/2 method. The use of 89 octane "Plus" gasoline is recommended for optimum performance and fuel economy.

While operating on gasoline with an octane number of 87, hearing a light knocking sound from the engine is not a cause for concern. However, if the engine is heard making a heavy knocking sound, see your dealer immediately. Use of gasoline with an octane number lower than 87 can cause engine failure and may void or not be covered by the New Vehicle Limited Warranty.

Poor quality gasoline can cause problems such as hard starting, stalling, and hesitations. If you experience these symptoms, try another brand of gasoline before considering service for the vehicle.

Reformulated Gasoline

Many areas of the country require the use of cleaner burning gasoline referred to as "Reformulated Gasoline". Reformulated gasoline contains oxygenates and are specifically blended to reduce vehicle emissions and improve air quality.

The use of reformulated gasoline is recommended. Properly blended reformulated gasoline will provide improved performance and durability of engine and fuel system components.

Materials Added To Fuel

Besides using unleaded gasoline with the proper octane rating, gasolines that contain detergents, corrosion and stability additives are recommended. Using gasolines that have these additives will help improve fuel economy, reduce emissions, and maintain vehicle performance.

Designated TOP TIER Detergent Gasoline contains a higher level of detergents to further aide in minimizing engine and fuel system deposits. When available, the usage of TOP TIER Detergent gasoline is recommended. Visit www.toptiergas.com for a list of TOP TIER Detergent Gasoline Retailers.

Indiscriminate use of fuel system cleaning agents should be avoided. Many of these materials intended for gum and varnish removal may contain active solvents or similar ingredients. These can harm fuel system gasket and diaphragm materials.

Gasoline/Oxygenate Blends

Some fuel suppliers blend unleaded gasoline with oxygenates such as ethanol.

CAUTION!
DO NOT use E-85, gasoline containing methanol, or gasoline containing more than 15% ethanol (E-15). Use of these blends may result in starting and drivability problems, damage critical fuel system components, cause emissions to exceed the applicable standard, and/or cause the Malfunction Indicator Light to illuminate. Please observe pump labels as they should clearly communicate if a fuel contains greater than 15% ethanol (E-15).

Problems that result from using gasoline containing more than 15% ethanol (E-15) or gasoline containing methanol are not the responsibility of the manufacturer and may void or not be covered under New Vehicle Limited Warranty.

Do Not Use E-85 In Non-Flex Fuel Vehicles

Non-Flex Fuel Vehicles (FFV) are compatible with gasoline containing up to 15% ethanol (E-15). Use of gasoline with higher ethanol content may void the New Vehicle Limited Warranty.

If a Non-FFV vehicle is inadvertently fueled with E-85 fuel, the engine will have some or all of these symptoms:

- Operate in a lean mode.
- OBD II Malfunction Indicator Light on.
- Poor engine performance.
- Poor cold start and cold drivability.
- Increased risk for fuel system component corrosion.

CNG And LP Fuel System Modifications

Modifications that allow the engine to run on Compressed Natural Gas (CNG) or Liquid Propane (LP) may result in damage to the engine, emissions, and fuel system components. Problems that result from running CNG or LP are not the responsibility of the manufacturer and may void or not be covered under the New Vehicle Limited Warranty.

MMT In Gasoline

Methylcyclopentadienyl Manganese Tricarbonyl (MMT) is a manganese-containing metallic additive that is blended into some gasoline to increase octane. Gasoline blended with MMT provides no performance advantage beyond gasoline of the same octane number without MMT. Gasoline blended with MMT reduces spark plug life and reduces emissions system performance in some vehicles. The manufacturer recommends that gasoline without MMT be used in your vehicle. The MMT content of gasoline may not be indicated on the gasoline pump; therefore, you should ask your gasoline retailer whether the gasoline contains MMT. MMT is prohibited in Federal and California reformulated gasoline.

Fuel System Cautions

CAUTION!

Follow these guidelines to maintain your vehicle's performance:

- **The use of leaded gasoline is prohibited by Federal law. Using leaded gasoline can impair engine performance and damage the emissions control system.**
- **An out-of-tune engine or certain fuel or ignition malfunctions can cause the catalytic converter to overheat. If you notice a pungent burning odor or some light smoke, your engine may be out of tune or malfunctioning and may require immediate service. Contact an authorized dealer for service assistance.**
- **The use of fuel additives, which are now being sold as octane enhancers, is not recommended. Most of these products contain high concentrations of methanol. Fuel system damage or vehicle performance problems resulting from the use of such fuels or additives is not the responsibility of the manufacturer and may void or not be covered under the New Vehicle Limited Warranty.**

NOTE:
Intentional tampering with the emissions control system can result in civil penalties being assessed against you.

Carbon Monoxide Warnings

WARNING!

Carbon monoxide (CO) in exhaust gases is deadly. Follow the precautions below to prevent carbon monoxide poisoning:

- **Do not inhale exhaust gases. They contain carbon monoxide, a colorless and odorless gas, which can kill. Never run the engine in a closed area, such as a garage, and never sit in a parked vehicle with the engine running for an extended period. If the vehicle is stopped in an open area with the engine running for more than a short period, adjust the ventilation system to force fresh, outside air into the vehicle.**
- **Guard against carbon monoxide with proper maintenance. Have the exhaust system inspected every time the vehicle is raised. Have any abnormal conditions repaired promptly. Until repaired, drive with all side windows fully open.**

FLUID CAPACITIES

	U.S.	Metric
Fuel (Approximate)		
2500/3500 Shortbed Models	31 Gallons	117 Liters
2500/3500 Longbed Models	32 Gallons	121 Liters
Engine Oil With Filter		
6.4L Engine (We recommend you use SAE 0W-40 engine oil meeting the requirements of FCA Material Standard MS-12633 for use in all operating temperatures.)	7 Quarts	6.6 Liters
Cooling System		
6.4L Engine – (We recommend you use Mopar Antifreeze/Coolant 10 Year/150,000 Mile Formula that meets the requirements of FCA Material Standard MS.90032.)	16.6 Quarts	15.7 Liters

FLUIDS AND LUBRICANTS

Engine

Component	Fluid, Lubricant, or Genuine Part
Engine Coolant	We recommend you use Mopar Antifreeze/Coolant 10 Year/150,000 Mile Formula OAT (Organic Additive Technology).
Engine Oil – 6.4L	For best performance and maximum protection under all types of operating conditions, the manufacturer only recommends full synthetic engine oils that meet the American Petroleum Institute (API) categories of SN. The manufacturer recommends the use of Pennzoil Ultra 0W-40 or equivalent Mopar engine oil meeting the requirements of FCA Material Standard MS-12633 for use in all operating temperatures.
Engine Oil Filter	We recommend you use Mopar brand Engine Oil Filters.
Spark Plugs	We recommend you use Mopar Spark Plugs.
Fuel Selection – 6.4L Engines	89 Octane Recommended - 87 Octane Acceptable, 0-15% Ethanol.

CAUTION!

- **Mixing of engine coolant (antifreeze) other than specified Organic Additive Technology (OAT) engine coolant (antifreeze), may result in engine damage and may decrease corrosion protection. Organic Additive Technology (OAT) engine coolant is different and should not be mixed with Hybrid Organic Additive Technology (HOAT) engine coolant (antifreeze) or any "globally compatible" coolant (antifreeze). If a non-OAT engine coolant (antifreeze) is introduced into the cooling system in an emergency, the cooling system will need to be drained, flushed, and refilled with fresh OAT coolant (conforming to MS.90032), by an authorized dealer as soon as possible.**
- **Do not use water alone or alcohol-based engine coolant (antifreeze) products. Do not use additional rust inhibitors or antirust products, as they may not be compatible with the radiator engine coolant and may plug the radiator.**
- **This vehicle has not been designed for use with propylene glycol-based engine coolant (antifreeze). Use of propylene glycol-based engine coolant (antifreeze) is not recommended.**

Chassis

Component	Fluid, Lubricant, or Genuine Part
Automatic Transmission – Eight-Speed Automatic (For Diesel Engine see Diesel Supplement)	Use only Mopar ZF 8&9 Speed ATF Automatic Transmission Fluid, or equivalent. Failure to use the correct fluid may affect the function or performance of your transmission.
Transfer Case	We recommend you use Mopar Transfer Case Lubricant for Borg Warner 44-44 and 44-45.
Front and Rear Axle	We recommend you use SAE 75W-85 HD Ram GL-5 Synthetic Axle Lubricant in 9.25 Front & 11.5 Rear Axles. Use Mopar Synthetic Gear Lubricant SAE 75W-140 (MS-8985) in 12.0 Rear axles. Limited slip additive is required for limited slip axles.
Brake Master Cylinder	We recommend you use Mopar DOT 3.
Power Steering Reservoir	We recommend you use Mopar Power Steering Fluid +4 or Mopar ATF+4 Automatic Transmission Fluid.

MULTIMEDIA

UCONNECT SYSTEMS

For detailed information about your Uconnect system, refer to your Uconnect Owner's Manual Supplement.

NOTE:
Uconnect screen images are for illustration purposes only and may not reflect exact software for your vehicle.

DRAG & DROP MENU BAR

The Uconnect features and services in the main menu bar are easily changed for your convenience. Simply follow these steps:

Uconnect 4C/4C NAV With 8.4–inch Display Main Menu

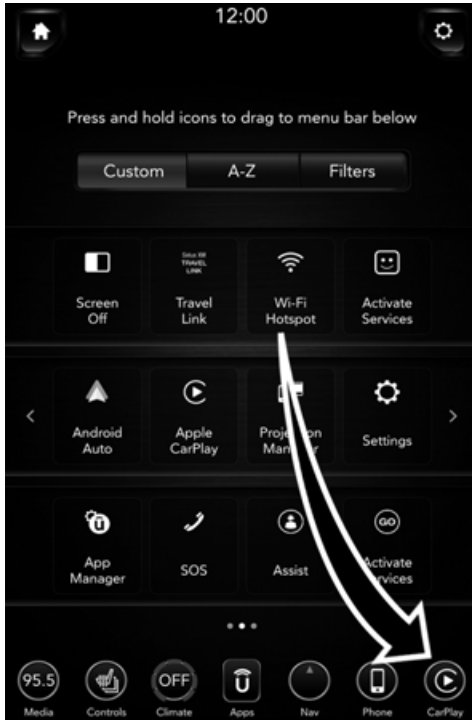

Uconnect 4C NAV With 12–inch Display Main Menu

1. Press the "Apps ⓤ" button to open the App screen.
2. Press and hold, then drag the selected App to replace an existing shortcut in the main menu bar.

   The new shortcut will now be an active App/shortcut on the main menu bar.

CYBERSECURITY

Your vehicle may be a connected vehicle and may be equipped with both wired and wireless networks. These networks allow your vehicle to send and receive information. This information allows systems and features in your vehicle to function properly.

Your vehicle may be equipped with certain security features to reduce the risk of unauthorized and unlawful access to vehicle systems and wireless communications. Vehicle software technology continues to evolve over time and FCA US LLC, working with its suppliers, evaluates and takes appropriate steps as needed. Similar to a computer or other devices, your vehicle may require software updates to improve the usability and performance of your systems or to reduce the potential risk of unauthorized and unlawful access to your vehicle systems.

The risk of unauthorized and unlawful access to your vehicle systems may still exist, even if the most recent version of vehicle software (such as Uconnect software) is installed.

WARNING!

- **It is not possible to know or to predict all of the possible outcomes if your vehicle's systems are breached. It may be possible that vehicle systems, including safety related systems, could be impaired or a loss of vehicle control could occur that may result in an accident involving serious injury or death.**
- **ONLY insert media (e.g., USB, SD card, or CD) into your vehicle if it came from a trusted source. Media of unknown origin could possibly contain malicious software, and if installed in your vehicle, it may increase the possibility for vehicle systems to be breached.**
- **As always, if you experience unusual vehicle behavior, take your vehicle to your nearest authorized dealer immediately.**

NOTE:

- FCA US LLC or your dealer may contact you directly regarding software updates.
- To help further improve vehicle security and minimize the potential risk of a security breach, vehicle owners should:
  - Routinely check www.driveuconnect.com (U.S. Residents) or www.driveuconnect.ca (Canadian Residents) to learn about available Uconnect software updates.
  - Only connect and use trusted media devices (e.g. personal mobile phones, USBs, CDs).

Privacy of any wireless and wired communications cannot be assured. Third parties may unlawfully intercept information and private communications without your consent. For further information, refer to "Data Collection & Privacy" in your Uconnect Owner's Manual Supplement or "Onboard Diagnostic System (OBD II) Cybersecurity" in "Getting To Know Your Instrument Panel".

UCONNECT SETTINGS

The Uconnect system uses a combination of buttons on the touchscreen and buttons on the faceplate located on the center of the instrument panel that allows you to access and change the customer programmable features. Many features can vary by vehicle.

Uconnect 3 Settings

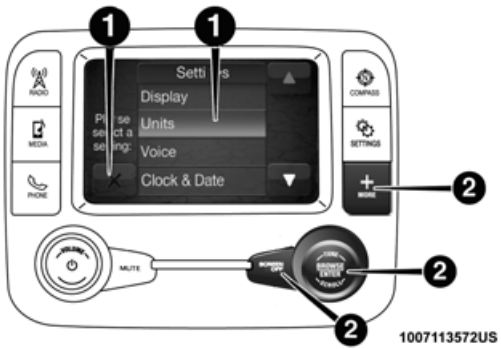

Uconnect 3 With 5–inch Display Buttons On The Touchscreen And Buttons On The Faceplate

1 — Uconnect Buttons On The Touchscreen
2 — Uconnect Buttons On The Faceplate

Push the MORE or SETTINGS button on the faceplate, then press the "Settings" button on the touchscreen (if equipped) to display the settings menu screen. In this mode the Uconnect system allows you to access programmable features that may be equipped such as Display, Units, Voice, Clock, Safety & Driving Assistance, Lights, Doors & Locks, Power Side Steps, Auto-On Comfort (if equipped), Engine Off Options, Suspension, Trailer Brake, Audio, Compass Settings, Phone/Bluetooth, SiriusXM Setup (if equipped), Restore Settings, Clear Personal Data and System Information.

NOTE:
Only one category may be selected at a time.

When making a selection, press the button on the touchscreen to enter the desired mode. Once in the desired mode, press and release the preferred setting until the button is highlighted. Once the setting is complete, either press the back arrow or the "Done" button on the touchscreen or push the Back button on the faceplate to return to the previous menu. Pressing the Up or Down Arrow buttons on the touchscreen on the right side of the screen will allow you to toggle up or down through the list of available settings.

NOTE:
All settings should be changed with the ignition in the RUN position.

Display

After pressing the “Display” button on the touchscreen, the following settings will be available.

Setting Name	Selectable Options	
Display Mode	Auto	Manual
Set Language	English, Français, Español	
Touchscreen Beep	On	Off
Fuel Saver Display	On	Off
NOTE: The “Fuel Saver Display” feature will allow you to enable fuel saver mode and will be displayed in the instrument cluster display.		

Units — If Equipped

After pressing “Units” on the touchscreen, the following will be available:

Setting Name	Selectable Options			
Units	US	Metric	Custom	
Speed	MPH		km/h	
Distance	mi		km	
Fuel Consumption	MPG (UG)	MPG (UK)	L/100 km	km/L
Pressure	psi	kPa	bar	

Setting Name	Selectable Options		
Power — If Equipped	HP (US)	HP (UK)	Kw
Temperature	°C		°F
Torque — If Equipped	lb-ft		Nm

Voice

After pressing the "Voice" button on the touchscreen, the following settings will be available:

Setting Name	Selectable Options		
Voice Response Length	Brief	Detailed	
Show Command List	Always	With Help	Never

Clock

After pressing the "Clock" button on the touchscreen, the following settings will be available:

Setting Name	Selectable Options	
Set Time	12 hour	24 hour

NOTE:
Within the "Set Time" feature, press the corresponding arrow above and below the current time to adjust, then select "AM" or "PM."

Safety/Assistance

After pressing the “Safety/Assistance” button on the touchscreen, the following settings will be available:

Setting Name	Selectable Options		
Forward Collision Warning — If Equipped	Off	Warning Only	Warning & Braking
Forward Collision Warning Sensitivity — If Equipped	Near	Med	Far
Front ParkSense Chime Volume	Low	Med	High
Rear ParkSense Chime Volume — If Equipped	Low	Med	High
Tilt Side Mirrors In Reverse — If Equipped	On	Off	
NOTE: When the “Tilt Side Mirrors In Reverse” feature is selected, the exterior side-view mirrors tilt downward when the ignition is in the RUN position and the transmission gear selector is in the REVERSE position. The mirrors move back to their previous position when the transmission is shifted out of REVERSE.			
Surround View Camera — If Equipped	On	Off	
NOTE: The “Surround View Camera” feature displays a complete 360 degree view of the vehicle's exterior environment while backing up.			

Setting Name	Selectable Options	
Surround View Camera Delay — If Equipped	On	Off
NOTE: The "Surround View Camera Delay" setting determines whether or not the screen will display the 360 degree view image with guidelines for up to ten seconds after the vehicle is shifted out of REVERSE. This delay will be canceled if the vehicle's speed exceeds 8 mph (13 km/h), the transmission is shifted into PARK, or the ignition is switched to the OFF position.		
Surround View Camera Guidelines — If Equipped	On	Off
NOTE: The "Surround View Rear Back Up Camera Active Guidelines" feature allows you to see active guidelines over the Surround View camera display whenever the gear selector is put into REVERSE or the Surround View button on the touchscreen is pressed. The image will be displayed on the radio touchscreen display.		
ParkView Backup Camera Active Guidelines	On	Off
NOTE: Your vehicle may be equipped with the ParkView Rear Back Up Camera Active Guidelines that allows you to see active guidelines over the ParkView Back up camera display whenever the gear selector is put into REVERSE. The image will be displayed on the radio touchscreen display along with a caution note to "check entire surroundings" across the top of the screen. After five seconds, this note disappears.		
ParkView Backup Camera Delay	On	Off

Setting Name	Selectable Options	
NOTE: When the vehicle is shifted out of REVERSE (with camera delay turned OFF), the rear camera mode is exited and the navigation or audio screen appears again. When the vehicle is shifted out of REVERSE (with camera delay turned ON), the rear view image with dynamic grid lines will be displayed for up to ten seconds after shifting out of REVERSE unless the forward vehicle speed exceeds 8 mph (12 km/h), the transmission is shifted into PARK or the ignition is switched to the OFF position.		
Forward Facing Camera Guidelines — If Equipped	On	Off
NOTE: The "Forward Facing Camera Guidelines" feature is an off-road type of feature that shows the path of the tires based on the steering wheel input.		
CHMSL (Center High Mounted Stop Lamp) Camera Dynamic Centerline — If Equipped	On	Off
NOTE: When the "CHMSL Camera Dynamic Centerline" feature is selected, it will assist in backing up for trailer alignment and hook up.		
Rain Sensing Auto Wipers — If Equipped	On	Off
NOTE: When the "Rain Sensing Auto Wipers" feature is selected, the system automatically activates the windshield wipers if it senses moisture on the windshield.		

Setting Name	Selectable Options	
Hill Start Assist — If Equipped	On	Off
NOTE: When the "Hill Start Assist" feature is selected, the Hill Start Assist (HSA) system becomes active.		
Tire Fill Assist	On	Off

Lights

After pressing the "Lights" button on the touchscreen, the following settings will be available:

Setting Name	Selectable Options	
Headlight Off Delay	0 sec	30 sec
	60 sec	90 sec
Headlight Illumination On Approach	0 sec	30 sec
	60 sec	90 sec
NOTE: When the "Headlight Illumination On Approach" feature is selected, it allows the adjustment of the amount of time the headlights remain on when the doors are unlocked with the key fob.		
Headlights With Wipers — If Equipped	On	Off
Auto Dim High Beams — If Equipped	On	Off
Flash Lights With Lock	On	Off

Setting Name	Selectable Options	
NOTE: When the "Flash Lights With Lock" feature is selected, the exterior lights flash when the doors are locked or unlocked with the key fob. This feature may be selected with or without the sound horn on lock feature selected.		
Steering Directed Lights	On	Off
NOTE: When the "Steering Directed Lights" feature is selected, the headlights turn with the direction of the steering wheel.		
Rear Cargo Guidance Lights — If Equipped	On	Off
NOTE: When the "Rear Cargo Guidance Lights" feature is selected, the lights in the cargo and bed of the truck will come on either when the headlight switch is pressed, or the button on the back bed of the truck is pressed.		

Doors & Locks

After pressing the "Doors & Locks" button on the touchscreen, the following settings will be available:

Setting Name	Selectable Options	
Auto Door Locks — If Equipped	On	Off
NOTE: When the "Auto Door Locks" feature is selected, all doors lock automatically when the vehicle reaches a speed of 15 mph (24 km/h).		
Auto Unlock On Exit	On	Off

Setting Name	Selectable Options		
NOTE: When the “Auto Unlock On Exit” feature is selected, all doors unlock when the vehicle is stopped, the transmission is in the PARK or NEUTRAL position and the driver's door is opened.			
Sound Horn With Lock	Off	1st Press	2nd Press
Remote Door Unlock	All	Driver	
NOTE: The “Remote Door Unlock” feature allows you to program your remote door locks to open “All doors” or only the “Driver door” with the first push of the key fob or grabbing the Passive Entry door handle.			
Sound Horn With Remote Start	On	Off	
NOTE: When the “Sound Horn With Remote Start” feature is selected, the horn sounds when the remote start is activated.			
Memory Linked To Fob — If Equipped	On	Off	
NOTE: • The “Memory Linked To Fob” feature provides automatic driver seat positioning to enhance driver mobility when entering and exiting the vehicle. • The seat returns to the memorized seat location if “Memory Linked To Fob” is set to (On) when the key fob is used to unlock the door.			
Passive Entry — If Equipped	On	Off	

Setting Name	Selectable Options	
NOTE: The "Passive Entry" feature allows you to lock and unlock the vehicle's door(s) without having to push the key fob lock or unlock buttons. It automatically unlocks the doors when the outside door handle is grabbed.		
Flash Lights With Lock	On	Off
NOTE: When the "Flash Lights With Lock" feature is selected, the exterior lights flash when the doors are locked or unlocked with the key fob. This feature may be selected with or without the "Sound Horn With Lock" feature selected.		

Power Side Steps — If Equipped

After pressing the "Power Side Steps" button on the touchscreen, the following settings will be available:

Setting Name	Selectable Options	
Power Side Steps	Automatic	Stow

Auto Comfort Systems — If Equipped

After pressing the "Auto-On Comfort" button on the touchscreen, the following settings will be available:

Setting Name	Selectable Options		
Auto-On Driver Heated/ Ventilated Seat & Steering Wheel With Vehicle Start — If Equipped	Off	Remote Start Only	All Starts
NOTE: When the "Auto-On Driver Heated/Ventilated Seat & Steering Wheel With Vehicle Start" feature is selected the driver's heated seat and heated steering wheel will automatically turn on when temperatures are below 40° F (4.4° C). When temperatures are above 80° F (26.7° C) the driver vented seat will turn on.			

Engine Off Options

After pressing the "Engine Off Options" button on the touchscreen, the following settings will be available:

Setting Name	Selectable Options	
Easy Exit Seats — If Equipped	On	Off
Headlight Off Delay	0 sec	30 sec
	60 sec	90 sec
Engine Off Power Delay	0 sec	45 sec
	5 min	10 min

Setting Name	Selectable Options	
Auto Entry/Exit — If Equipped	On	Off

Suspension — If Equipped

After pressing the "Suspension" button on the touchscreen, the following settings will be available:

Setting Name	Selectable Options	
Auto Entry/Exit Suspension	On	Off
NOTE: When the "Auto Entry/Exit Suspension" feature is selected, the vehicle automatically lowers from ride height position when vehicle shifted to park for easy entry/exit.		
Display Suspension Messages	All	Warning Only
Tire Jack Mode	On	Off
NOTE: When this feature is selected the air suspension system is disabled to prevent auto leveling of the suspension, while the vehicle is on a jack changing a tire.		
Transport Mode	On	Off
NOTE: When the "Transport Mode" feature is selected, the air suspension system is disabled to assist with flat bed towing.		
Wheel Alignment Mode	On	Off
NOTE: The "Wheel Alignment Mode" feature prevents auto leveling of the air suspension while performing a wheel alignment service. Before performing a wheel alignment, this mode must be enabled. Refer to an authorized dealer for further information.		

Trailer Brake

After pressing the "Trailer Brake" button on the touchscreen, the following settings will be available:

Setting Name	Selectable Options			
Trailer Select	Trailer 1	Trailer 2	Trailer 3	Trailer 4
Trailer Brake Type	Light Electric	Heavy Electric	Light EOH	Heavy EOH
Trailer Name	List of Trailer Names Available			
NOTE: You can select and personalize your trailer name depending on the type of trailer you are hauling. Select the trailer name from the following list: trailer, boat, car, cargo, dump, equipment, flatbed, gooseneck, horse, livestock, motorcycle, snow mobile, travel, utility, and 5th wheel.				

Audio

After pressing the "Audio" button on the touchscreen, the following settings will be available:

Setting Name	Selectable Options			
Balance/Fade	Front	Back	Left	Right
NOTE: The "Balance/Fade" feature allows you to adjust the Balance and Fade settings. Press and drag the speaker icon or use the arrows to adjust, tap the "C" icon to readjust to the center.				
Equalizer	+		–	
NOTE: When in the "Equalizer" display you may adjust the Bass, Mid and Treble settings.				

Setting Name	Selectable Options			
Speed Adjusted Volume	Off	1	2	3
NOTE: The “Speed Adjusted Volume” feature increases or decreases volume relative to vehicle speed.				
Surround Sound — If Equipped	On		Off	
NOTE: The “Surround Sound” feature provides simulated surround sound mode.				
AUX Volume Offset — If Equipped	On		Off	
NOTE: The “AUX Volume Offset” feature provides the ability to tune the audio level for portable devices connected through the AUX input.				
Loudness — If Equipped	On		Off	
NOTE: The “Loudness” feature improves sound quality at lower volumes.				

Compass Settings — If Equipped

After pressing the “Compass Settings” button on the touchscreen, the following settings will be available:

Setting Name	Selectable Options														
Variance	1	2	3	4	5	6	7	8	9	10	11	12	13	14	15

NOTE:

- Compass Variance is the difference between Magnetic North and Geographic North. To compensate for the differences the variance should be set for the zone where the vehicle is driven, per the zone map. Once properly set, the compass will automatically compensate for the differences, and provide the most accurate compass heading.
- Keep magnetic materials away from the top of the instrument panel, such as iPod's, Mobile Phones, Laptops and Radar Detectors. This is where the compass module is located, and it can cause interference with the compass sensor, and it may give false readings.

Perform Compass Calibration	On	Off

NOTE:
Press the “Calibration” button on the touchscreen to change this setting. This compass is self-calibrating, which eliminates the need to manually reset the compass. When the vehicle is new, the compass may appear erratic until it is calibrated. You may also calibrate the compass by pressing the “ON” button on the touchscreen and completing one or more 360-degree turns (in an area free from large metal or metallic objects). The compass will now function normally.

Compass Variance Zone Map

Phone/Bluetooth

After pressing the “Phone/Bluetooth” button on the touchscreen, the following settings will be available:

Setting Name	Selectable Options
Paired Phones	List of Paired Phones
NOTE: The “Paired Phones” feature shows which phones are paired to the Phone/Bluetooth system. For further information, refer to the Uconnect Owner’s Manual Supplement.	

SiriusXM Setup — If Equipped

After pressing the “SiriusXM Setup” button on the touchscreen, the following settings will be available:

Setting Name	Selectable Options	
Tune Start	On	Off
Channel Skip	List of Channels	
NOTE: SiriusXM can be programmed to exclude undesirable channels while scanning. To make your selection, press the “Channel Skip” button on the touchscreen, select the channels you would like to skip.		
Subscription Info	Sirius ID	

Setting Name	Selectable Options
NOTE: New vehicle purchasers or lessees will receive a free limited time subscription to SiriusXM Satellite Radio with your radio. Following the expiration of the free services, it will be necessary to access the information on the Subscription Information screen to re-subscribe. 1. Press the “Subscription Info” button on the touchscreen to access the Subscription Information screen. 2. Write down the SIRIUS ID numbers for your receiver. To reactivate your service, either call the number listed on the screen or visit the provider online.	

Restore Default Settings

After pressing the “Restore Default Settings” button on the touchscreen, the following settings will be available:

Setting Name	Selectable Options	
Restore Default Settings	Yes	Cancel
NOTE: When the “Restore Default Settings” feature is selected it will reset the Display, Clock, Audio, and Radio Settings to their default settings. If “Yes” is selected a pop-up will appear asking "Are you sure you want to reset your settings to default?” select “Yes” to restore, or “Cancel” to exit.		

Clear Personal Data

After pressing the “Clear Personal Data Settings” button on the touchscreen, the following settings will be available:

Setting Name	Selectable Options	
Clear Personal Data	Yes	Cancel
NOTE: When this feature is selected it will remove all personal data including Bluetooth devices and presets. If “Yes” is selected a pop-up will appear asking "Are you sure you want to clear all personal data?” select “Yes” to Clear, or “Cancel” to exit.		

System Information

After pressing the “System Information” button on the touchscreen, the following settings will be available:

Setting Name	Selectable Options
System Information	System Software Information Screen
NOTE: When the “System Information” feature is selected, a “System Software Information” screen will appear, displaying the system software version. You can also update your maps with a USB device. Please see an authorized dealer for further information.	

Uconnect 4/4C/4C NAV Settings

Uconnect 4/4C/4C NAV With 8.4–inch Display Buttons On The Touchscreen And Buttons On The Faceplate

1 — Uconnect Buttons On The Touchscreen
2 — Uconnect Buttons On The Faceplate

Press the "Apps" button on the touchscreen then press the "Settings" button on the touchscreen to display the settings menu screen. In this mode the Uconnect system allows you to access programmable features that may be equipped such as Language, Display, Units, Voice, Clock, Safety & Driving Assistance, Mirrors & Wipers, Lights, Doors & Locks, Power Side Steps (if equipped), Auto-On Comfort (if equipped), Engine Off Options, Suspension, Trailer, Audio, Phone/Bluetooth, SiriusXM Setup (if equipped), Restore Settings and System Information.

NOTE:
Only one category may be selected at a time.

When making a selection, press the button on the touchscreen to enter the desired mode. Once in the desired mode, press and release the preferred setting until a check-mark appears next to the setting, showing that setting has been selected. Once the setting is complete, press the back arrow button on the touchscreen to return to the previous menu or press the "X" button on the touchscreen to close out of the settings screen. Pressing the Up or Down Arrow buttons on the touchscreen on the right side of the screen will allow you to toggle up or down through the list of available settings.

NOTE:
All settings should be changed with the ignition in the RUN position.

Language

After pressing the “Language” button on the touchscreen, the following settings will be available:

Setting Name	Selectable Options		
Set Language	English	Français	Español
NOTE: When the “Set Language” feature is selected, you may select one of multiple languages (English / Français / Español) for all display nomenclature, including the trip functions and the navigation system (if equipped). Press the “Set Language” button on the touchscreen, then press the desired language button on the touchscreen until a check-mark appears next to the language, showing that setting has been selected.			

Display

After pressing the “Display” button on the touchscreen, the following settings will be available:

Setting Name	Selectable Options	
Display Mode	Auto	Manual
NOTE: When Day or Night is selected for the Display Mode, the usage of the Parade Mode feature will cause the radio to activate the Display Brightness Day control even though the headlights are on.		
Display Brightness With Headlights ON	–	+
NOTE: To make changes to the "Display Brightness with Headlights ON" setting, the headlights must be on and the interior dimmer switch must not be in the "party" or "parade" positions.		

Setting Name	Selectable Options	
Display Brightness With Headlights OFF	–	+
NOTE: To make changes to the "Display Brightness with Headlights OFF" setting, the headlights must be off and the interior dimmer switch must not be in the "party" or "parade" positions.		
Touchscreen Beep	On	Off
Controls Screen Time-Out — If Equipped	On	Off
Fuel Saver Display in Cluster — If Equipped	On	Off
NOTE: When selected, the system displays fuel saver mode in the instrument cluster.		
Navigation Next Turn Pop-ups Displayed In Cluster — If Equipped	On	Off
Phone Pop-ups Displayed in Cluster — If Equipped	On	Off

Units

After pressing the “Units” button on the touchscreen, you may select each unit of measure independently displayed in the instrument cluster display, and navigation system (if equipped). The following selectable units of measure are listed below:

Setting Name	Selectable Options			
Units	US	Metric	Custom	
NOTE: When the “Custom” setting is selected, units will appear according to your personally configured settings. To configure these settings, press the “Custom” bar. The following settings will appear:				
Speed	MPH		km/h	
Distance	mi		km	
Fuel Consumption	MPG (US)	MPG (UK)	L/100 km	km/L
Pressure	psi	kPa	bar	
Power — If Equipped	HP (US)	HP (UK)	Kw	
Temperature	°F		°C	
Torque — If Equipped	lb-ft		Nm	

Voice

After pressing the "Voice" button on the touchscreen, the following settings will be available:

Setting Name	Selectable Options		
Voice Response Length	Brief	Detailed	
Show Command List	Never	w/Help	Always

Clock

After pressing the "Clock & Date" button on the touchscreen, the following settings will be available:

Setting Name	Selectable Options	
Sync Time With GPS — If Equipped	On	Off
Set Time Hours	–	+
Set Time Minutes	–	+
Time Format	12hrs	24hrs
	AM	PM
Show Time In Status Bar — If Equipped	On	Off
NOTE: The "Show Time In Status Bar" feature allows you to turn on or shut off the digital clock in the status bar.		

Camera

After pressing the “Camera” button on the touchscreen, the following settings will be available:

Setting Name	Selectable Options	
Surround View Camera — If Equipped	On	Off
NOTE: The “Surround View Camera” feature displays a complete 360 degree view of the vehicle's exterior environment while backing up.		
Surround View Camera Delay — If Equipped	On	Off
NOTE: The “Surround View Camera Delay” setting determines whether or not the screen will display the 360 degree view image with guidelines for up to ten seconds after the vehicle is shifted out of REVERSE. This delay will be canceled if the vehicle’s speed exceeds 8 mph (13 km/h), the transmission is shifted into PARK, or the ignition is switched to the OFF position.		
Surround View Camera Guidelines — If Equipped	On	Off
NOTE: The “Surround View Rear Back Up Camera Active Guidelines” feature allows you to see active guidelines over the Surround View camera display whenever the gear selector is put into REVERSE or the Surround View button on the touchscreen is pressed. The image will be displayed on the radio touchscreen display.		
ParkView Backup Camera Delay	On	Off

Setting Name	Selectable Options	
NOTE: The "ParkView Backup Camera Delay" setting determines whether or not the screen will display the rear view image with dynamic grid lines for up to ten seconds after the vehicle is shifted out of REVERSE. This delay will be canceled if the vehicle's speed exceeds 8 mph (13 km/h), the transmission is shifted into PARK, or the ignition is switched to the OFF position.		
Active Parkview Backup Camera Guidelines	On	Off
NOTE: The "ParkView Backup Camera Active Guide Lines" feature overlays the Rear Backup Camera image with active, or dynamic, grid lines to help illustrate the width of the vehicle and its project back up path, based on the steering wheel position when the option is checked. A dashed center line overlay indicates the center of the vehicle to assist with parking or aligning to a hitch/receiver.		
Fixed Parkview Backup Camera Guidelines	On	Off
Forward Facing Camera Guidelines — If Equipped	On	Off

Setting Name	Selectable Options	
NOTE: The “Forward Facing Camera Guidelines” feature is an off-road type of feature that shows the path of the tires based on the steering wheel input.		
CHMSL (Center High Mounted Stop Lamp) Camera Dynamic Centerline — If Equipped	On	Off
NOTE: When the “CHMSL Camera Dynamic Centerline” feature is selected, it will assist in backing up for trailer alignment and hook up.		

Safety & Driving Assistance

After pressing the “Safety & Driving Assistance” button on the touchscreen, the following settings will be available:

Setting Name	Selectable Options	
Surround View Camera — If Equipped	On	Off
NOTE: The “Surround View Camera” feature displays a complete 360 degree view of the vehicle's exterior environment while backing up.		
Surround View Camera Delay — If Equipped	On	Off

Setting Name	Selectable Options	
NOTE: The "Surround View Camera Delay" setting determines whether or not the screen will display the 360 degree view image with guidelines for up to ten seconds after the vehicle is shifted out of REVERSE. This delay will be canceled if the vehicle's speed exceeds 8 mph (13 km/h), the transmission is shifted into PARK, or the ignition is switched to the OFF position.		
Surround View Camera Guidelines — If Equipped	On	Off
NOTE: The "Surround View Rear Back Up Camera Active Guidelines" feature allows you to see active guidelines over the Surround View camera display whenever the gear selector is put into REVERSE or the Surround View button on the touchscreen is pressed. The image will be displayed on the radio touchscreen display.		
ParkView Backup Camera Delay	On	Off
NOTE: The "ParkView Backup Camera Delay" setting determines whether or not the screen will display the rear view image with dynamic grid lines for up to ten seconds after the vehicle is shifted out of REVERSE. This delay will be canceled if the vehicle's speed exceeds 8 mph (13 km/h), the transmission is shifted into PARK, or the ignition is switched to the OFF position.		
Active Parkview Backup Camera Guidelines	On	Off

Setting Name	Selectable Options		
NOTE: The "ParkView Backup Camera Active Guide Lines" feature overlays the Rear Backup Camera image with active, or dynamic, grid lines to help illustrate the width of the vehicle and its project back up path, based on the steering wheel position when the option is checked. A dashed center line overlay indicates the center of the vehicle to assist with parking or aligning to a hitch/receiver.			
Fixed Parkview Backup Camera Guidelines	On	Off	
Forward Facing Camera Guidelines — If Equipped	On	Off	
NOTE: The "Forward Facing Camera Guidelines" feature is an off-road type of feature that shows the path of the tires based on the steering wheel input.			
CHMSL (Center High Mounted Stop Lamp) Camera Dynamic Centerline — If Equipped	On	Off	
NOTE: When the "CHMSL Camera Dynamic Centerline" feature is selected, it will assist in backing up for trailer alignment and hook up.			
Forward Collision Warning — If Equipped	Off	Warning Only	Warning & Braking

Setting Name	Selectable Options		
NOTE: Apples brakes to slow the vehicle in case of potential forward collision, or applies brakes and a warning.			
Forward Collision Warning Sensitivity — If Equipped	Near	Med	Far
NOTE: Sets the distance in which a Forward Collision Warning occurs.			
Front ParkSense Volume	Low	Med	High
Rear ParkSense Volume	Low	Med	High
Power Side Steps — If Equipped	Auto	Store	
Blind Spot Alert	Off	Lights	Lights & Chime
NOTE: Brakes the vehicle while in reverse if potential rear collision is detected.			
Hill Start Assist — If Equipped	On	Off	
Tire Fill Assist — If Equipped	On	Off	

Mirrors & Wipers

After pressing the "Mirrors & Wipers" button on the touchscreen, the following settings will be available:

Setting Name	Selectable Options	
Tilt Side Mirrors In Reverse — If Equipped	On	Off
NOTE: When the "Tilt Side Mirrors In Reverse" feature is selected, the outside side-view mirrors will tilt downward when the ignition is in the RUN position and the transmission gear selector is in the REVERSE position. The mirrors will move back to their previous position when the transmission is shifted out of REVERSE.		
Rain Sensing Auto Wipers — If Equipped	On	Off
NOTE: Automatically adjusts the wiper speed based on the amount of precipitation.		
Headlights with Wipers	On	Off

Lights

After pressing the “Lights” button on the touchscreen, the following settings will be available:

Setting Name	Selectable Options	
Headlight Off Delay	–	+
NOTE: When the “Headlight Off Delay” feature is selected, the driver can choose to have the headlights remain on for 0, 30, 60, or 90 seconds when exiting the vehicle.		
Headlight Illumination On Approach	–	+
NOTE: When the “Headlight Illumination On Approach” feature is selected, the headlights will activate and remain on for 0, 30, 60, or 90 seconds when the doors are unlocked with the key fob.		
Headlights With Wipers — If Equipped	On	Off
NOTE: When the “Headlights With Wipers” feature is selected, and the headlight switch is in the AUTO position, the headlights turn on approximately ten seconds after the wipers are turned on. The headlights also turn off when the wipers are turned off if they were turned on by this feature.		
Auto Dim High Beams — If Equipped	On	Off
NOTE: When the “Auto Dim High Beams” feature is selected, the high beam headlights deactivate automatically under certain conditions.		

Setting Name	Selectable Options	
Daytime Running Lights — If Equipped	On	Off
Flash Lights With Lock	On	Off
NOTE: When the "Flash Lights With Lock" feature is selected, the exterior lamps flash when the doors are locked or unlocked with the key fob. This feature may be selected with or without the sound horn on lock feature selected.		
Rear Cargo Guidance Lights — If Equipped	On	Off
NOTE: When the "Rear Cargo Guidance Lights" feature is selected, the lights in the cargo and bed of the truck will come on either when the headlight switch is pressed, or the button on the back bed of the truck is pressed.		

Doors & Locks

After pressing the "Doors & Locks" button on the touchscreen, the following settings will be available:

Setting Name	Selectable Options	
Auto Door Locks — If Equipped	On	Off
NOTE: When the "Auto Door Locks" feature is selected, all doors lock automatically when the vehicle reaches a speed of 15 mph (24 km/h).		
Auto Unlock On Exit	On	Off

Setting Name	Selectable Options		
NOTE: When the “Auto Unlock On Exit” feature is selected, all doors unlock when the vehicle is stopped and the transmission is in the PARK or NEUTRAL position and the driver's door is opened.			
Flash Lights With Lock	On	Off	
NOTE: When the “Flash Lights With Lock” feature is selected, the front and rear turn signals flash when the doors are locked or unlocked with the key fob. This feature may be selected with or without the “Sound Horn With Lock” feature selected.			
Sound Horn With Lock	Off	1st Press	2nd Press
Sound Horn With Remote Start	On	Off	
1st Press Of Key Fob Unlocks	Driver Door	All Doors	

Setting Name	Selectable Options	
NOTE: • When “1st Press Of Key Fob Unlocks: Driver Door” is selected, only the driver's door unlocks on the first press of the key fob unlock button. You must push the key fob unlock button twice to unlock the passenger's doors. • When “All Doors” is selected, all of the doors unlock on the first push of the key fob unlock button. • If the vehicle is programmed “1st Press Of Key Fob Unlocks: All Doors”, all doors will unlock no matter which Passive Entry equipped door handle is grasped. If “1st Press Of Key Fob Unlocks: Driver Door” is programmed, only the driver’s door will unlock when the driver’s door is grasped. • With Passive Entry, if “1st Press Of Key Fob Unlocks: Driver Door” is programmed pushing the handle more than once only results in the driver’s door opening. If “Driver Door” is selected, once the driver’s door is opened, the interior door lock/unlock switch can be used to unlock all doors (or use key fob).		
Passive Entry — If Equipped	On	Off
NOTE: The “Passive Entry” feature allows you to lock and unlock the vehicle’s door(s) without having to push the key fob lock or unlock buttons.		
Personal Settings Linked To Key Fob — If Equipped	On	Off
NOTE: • The “Personal Settings Linked To Key Fob” feature provides automatic driver seat positioning to enhance driver mobility when entering and exiting the vehicle. • The seats return to the memorized seat location (if “Personal Settings Linked To Key Fob” is set to on) when the key fob is used to unlock the door.		

Power Side Steps — If Equipped

After pressing the "Power Side Steps" button on the touchscreen, the following settings will be available:

Setting Name	Selectable Options	
Power Side Steps	Automatic	Stow

Auto Comfort Systems — If Equipped

After pressing the "Auto-On Comfort" button on the touchscreen, the following settings will be available:

Setting Name	Selectable Options		
Auto-On Driver Heated/ Ventilated Seat & Steering Wheel With Vehicle Start — If Equipped	Off	Remote Start	All Starts
NOTE: When the "Auto-On Driver Heated/Ventilated Seat & Steering Wheel With Vehicle Start" feature is selected the driver's heated seat and heated steering wheel will automatically turn on when temperatures are below 40° F (4.4° C). When temperatures are above 80° F (26.7° C), the driver vented seat will turn on.			

Engine Off Options

After pressing the “Engine Off Options” button on the touchscreen, the following settings will be available:

Setting Name	Selectable Options	
Engine Off Power Delay	–	+
NOTE: When the “Engine Off Power Delay” feature is selected, the power window switches, radio, Uconnect phone system (if equipped), power sunroof (if equipped), and power outlets will remain active for up to ten minutes after the ignition is cycled to OFF. Opening either front door will cancel this feature.		
Headlight Off Delay	–	+
NOTE: When the “Headlight Off Delay” feature is selected, the driver can choose to have the headlights remain on for 0, 30, 60, or 90 seconds when exiting the vehicle.		
Auto Entry/Exit — If Equipped	On	Off
Easy Exit Seat — If Equipped	On	Off
NOTE: When the “Easy Exit Seat” feature is selected, the Driver’s seat will automatically move rearward once the engine is shut off.		

Air Suspension — If Equipped

After pressing the "Suspension" button on the touchscreen, the following settings will be available:

Setting Name	Selectable Options		
Display Suspension Messages	All	Warnings Only	
Tire Jack Mode	On	Off	
NOTE: When the "Tire Jack Mode" feature is selected, the air suspension system is disabled to assist with changing a spare tire.			
Transport Mode	On	Off	
NOTE: When the "Transport Mode" feature is selected, the air suspension system lowers and then disables to assist with flat bed towing.			
Wheel Alignment Mode	On	Off	
NOTE: Before performing a wheel alignment, the "Wheel Alignment Mode" must be enabled. Refer to an authorized dealer for further information.			
Four Corner Air Suspension Modes — If Equipped	Tire Jack Mode	Transport Mode	Wheel Alignment Mode
NOTE: There are four air suspension modes designed to protect the system in unique situations. Tire Jack Mode is selected to assist in changing a spare tire. Transport Mode is selected to assist when the vehicle is being flat bed towed. Wheel Alignment Mode is selected before performing a wheel alignment, refer to an authorized dealer for information.			

Trailer Brake

After pressing the "Trailer Brake" button on the touchscreen, the following settings will be available:

Setting Name	Selectable Options			
Trailer Select	Trailer 1	Trailer 2	Trailer 3	Trailer 4
Trailer Brake Type	Light Electric	Heavy Electric	Light EOH	Heavy EOH
Trailer Name	List of Trailer Names Available			
NOTE: You can select and personalize your trailer name depending on the type of trailer you are hauling. Select the trailer name from the following list: trailer, boat, car, cargo, dump, equipment, flatbed, gooseneck, horse, livestock, motorcycle, snow mobile, travel, utility, and 5th wheel.				

Audio

After pressing the "Audio" button on the touchscreen, the following settings will be available:

Setting Name	Selectable Options			
Balance/Fade	Front	Rear	Left	Right
NOTE: The "Balance/Fade" feature allows you to adjust the Balance and Fade settings. Press and drag the speaker icon or use the arrows to adjust, tap the "C" icon to readjust to the center.				
Equalizer	+		–	
NOTE: When in the "Equalizer" display you may adjust the Bass, Mid and Treble settings.				

Setting Name	Selectable Options			
Speed Adjusted Volume	Off	1	2	3
NOTE: The “Speed Adjusted Volume” feature increases or decreases volume relative to vehicle speed.				
Surround Sound — If Equipped	On		Off	
NOTE: The “Surround Sound” feature provides simulated surround sound mode.				
AUX Volume Offset — If Equipped	On		Off	
NOTE: The “AUX Volume Offset” feature provides the ability to tune the audio level for portable devices connected through the AUX input.				
Auto Play	On		Off	

Phone/Bluetooth Settings

After pressing the "Phone/Bluetooth Settings" button on the touchscreen, the following settings will be available:

Setting Name	Selectable Options	
Phone Pop-ups Displayed in Cluster — If Equipped	On	Off
Do Not Disturb	List of Settings	
NOTE: Press "Do Not Disturb" to access the available settings. The following settings are: Auto Reply (both, text, call), Auto Reply Message (custom, default) and Custom Auto Reply Message (create message).		
Paired Phones and Audio Devices	List Of Paired Phones and Audio Sources	
NOTE: The "Paired Phones and Audio Devices" feature shows which phones and audio sources are paired to the Phone and Audio Sources Settings system. For further information, refer to the Uconnect Owner's Manual Supplement.		
Smartphone Projection Manager	On	Off

SiriusXM Setup — If Equipped

After pressing the "SiriusXM Setup" button on the touchscreen, the following settings will be available:

Setting Name	Selectable Options	
Tune Start	On	Off

Setting Name	Selectable Options
NOTE: The “Tune Start” feature begins playing the current song from the beginning when you tune to a music channel using one of the twelve presets, so you can enjoy the complete song. This feature occurs the first time the preset is selected during that current song. Tune Start works in the background, so you will not even realize it's on, except that you will miss the experience of joining your favorite song with only a few seconds left to play.	
Channel Skip	List of Channels
NOTE: SiriusXM can be programmed to designate a group of channels that are the most desirable to listen to or to exclude undesirable channels while scanning. This feature allows you to select the channels you would like to skip.	
Subscription Info	Sirius ID
NOTE: New vehicle purchasers or lessees will receive a free limited time subscription to SiriusXM Satellite Radio with your radio. Following the expiration of the free services, it will be necessary to access the information on the Subscription Information screen to re-subscribe. 1. Press the “Subscription Info” button on the touchscreen to access the Subscription Information screen. 2. Write down the Sirius ID numbers for your receiver. To reactivate your service, either call the number listed on the screen or visit the provider online. SiriusXM Travel Link is a separate subscription.	

Restore Default Settings

After pressing the “Restore Default Settings” button on the touchscreen, the following settings will be available:

Setting Name	Selectable Options	
Restore Default Settings	Yes	Cancel
NOTE: When the “Restore Settings” feature is selected it resets clock, audio and other features to their default settings.		

System Information

After pressing the “System Information” button on the touchscreen, the following settings will be available:

Setting Name	Selectable Options
Software License	System Software Information Screen
NOTE: When the “Software License” feature is selected, a “System Software Information” screen will appear, displaying the system software version.	

Uconnect 4C NAV With 12–inch Display Settings

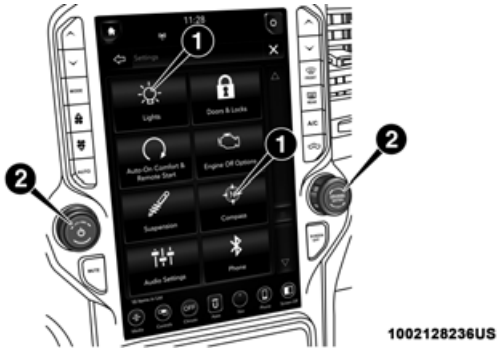

Uconnect 4C NAV With 12–inch Display Buttons On The Touchscreen And Buttons On The Faceplate

1 — Uconnect Buttons On The Touchscreen
2 — Uconnect Buttons On The Faceplate

Press the "Settings" button on the touchscreen to display the settings menu screen. In this mode the Uconnect system allows you to access programmable features that may be equipped such as Language, Display, Units, Voice, Clock & Date, Camera, Safety & Driving Assistance, Mirrors and Wipers, Lights, Doors & Locks, Auto-On Comfort (if equipped), Engine Off Options, Suspension, Trailer, Audio Settings, Bluetooth, SiriusXM Setup (if equipped), Reset and System Information.

NOTE:
Only one category may be selected at a time.

When making a selection, press the button on the touchscreen to enter the desired mode. Once in the desired mode, press and release the preferred setting until a check-mark appears next to the setting, showing that setting has been selected. Once the setting is complete, press the back arrow button on the touchscreen to return to the previous menu or press the "X" button on the touchscreen to close out of the settings screen. Pressing the Up or Down Arrow buttons on the touchscreen on the right side of the screen will allow you to toggle up or down through the list of available settings.

NOTE:
All settings should be changed with the ignition in the RUN position.

Language

After pressing the “Language” button on the touchscreen, the following settings will be available:

Setting Name	Selectable Options		
Language	English	Espanol	Français
NOTE: When the “Set Language” feature is selected, you may select one of multiple languages (English / Français / Español) for all display nomenclature, including the trip functions and the navigation system (if equipped). Press the “Set Language” button on the touchscreen, then press the desired language button on the touchscreen until a check-mark appears next to the language, showing that setting has been selected.			

Display

After pressing the “Display” button on the touchscreen, the following settings will be available:

Setting Name	Selectable Options	
Display Brightness Mode	Auto	Manual
NOTE: Select Auto or Manual display mode and this allows adjustment of overall screen brightness.		
Display Brightness Headlight ON	-	+
NOTE: To make changes to the "Display Brightness with Headlights ON" setting, the headlights must be on and the interior dimmer switch must not be in the "party" or "parade" positions.		
Display Brightness Headlight OFF	-	+

Setting Name	Selectable Options	
NOTE: To make changes to the "Display Brightness with Headlights OFF" setting, the headlights must be off and the interior dimmer switch must not be in the "party" or "parade" positions.		
Set Theme	Pre-configured Themes	
Touchscreen Beep	On	Off
Controls Screen Time-Out — If Equipped	On	Off
Fuel Saver Display — If Equipped	On	Off
NOTE: When selected, the system displays fuel saver mode in the instrument cluster.		
Navigation Turn-By-Turn Displayed in Cluster — If Equipped	On	Off
Phone Pop-Ups Displays In Cluster	On	Off
Ready To Drive Pop-Ups — If Equipped	On	Off

Units — If Equipped

After pressing "Units" on the touchscreen, the following will be available:

Setting Name	Selectable Options			
Units	US	Metric	Custom	
NOTE: When the "Custom" setting is selected, units will appear according to your personally configured settings. To configure these settings, press the "Custom" bar. The following settings will appear:				
Speed	MPH		km/h	
Distance	mi		km	
Fuel Consumption	MPG (US)	MPG (UK)	L/100 km	km/L
Pressure	psi	kPa	bar	
Power — If Equipped	HP (US)	HP (UK)	Kw	
Temperature	°F		°C	
Torque — If Equipped	lb-ft		Nm	

Voice

After pressing the "Voice" button on the touchscreen, the following settings will be available:

Setting Name	Selectable Options		
Voice Response Length	Brief	Detailed	
Show Command List	Always	w/Help	Never

Clock

After pressing the “Clock” button on the touchscreen, the following settings will be available:

Setting Name	Selectable Options	
Sync Time With GPS — If Equipped	On	Off
Set Time Hours	+	–
Set Time Minutes	+	–
Time Format	AM	PM
	12hrs	24hrs
Show Time in Status Bar — If Equipped	On	Off

Camera

After pressing the “Camera” button on the touchscreen, the following settings will be available:

Setting Name	Selectable Options	
Surround View Camera — If Equipped	On	Off
NOTE: The “Surround View Camera” feature displays a complete 360 degree view of the vehicle's exterior environment while backing up.		
Surround View Camera Delay — If Equipped	On	Off

Setting Name	Selectable Options	
NOTE: The "Surround View Camera Delay" setting determines whether or not the screen will display the 360 degree view image with guidelines for up to ten seconds after the vehicle is shifted out of REVERSE. This delay will be canceled if the vehicle's speed exceeds 8 mph (13 km/h), the transmission is shifted into PARK, or the ignition is switched to the OFF position.		
Surround View Camera Guidelines — If Equipped	On	Off
NOTE: The "Surround View Rear Back Up Camera Active Guidelines" feature allows you to see active guidelines over the Surround View camera display whenever the gear selector is put into REVERSE or the Surround View button on the touchscreen is pressed. The image will be displayed on the radio touchscreen display.		
Parkview Backup Camera Delay	On	Off
NOTE: The "ParkView Backup Camera Delay" setting determines whether or not the screen will display the rear view image with dynamic grid lines for up to ten seconds after the vehicle is shifted out of REVERSE. This delay will be canceled if the vehicle's speed exceeds 8 mph (13 km/h), the transmission is shifted into PARK, or the ignition is switched to the OFF position.		
Parkview Camera Delay	On	Off
NOTE: The "Parkview Camera Delay" setting determines whether or not the screen will display the rear view image with dynamic grid lines for up to ten seconds after the vehicle is shifted out of REVERSE. This delay will be canceled if the vehicle's speed exceeds 8 mph (13 km/h), the transmission is shifted into PARK, or the ignition is switched to the OFF position.		
Active Backup Camera Guidelines	On	Off

Setting Name	Selectable Options	
NOTE: The "Active Backup Camera Guidelines" feature overlays the Rear Backup Camera image with active, or dynamic, grid lines to help illustrate the width of the vehicle and its project back up path, based on the steering wheel position when the option is checked. A dashed center line overlay indicates the center of the vehicle to assist with parking or aligning to a hitch/receiver.		
Fixed Backup Camera Guidelines	On	Off
Forward Facing Camera Guidelines — If Equipped	On	Off
NOTE: The "Forward Facing Camera Guidelines" feature is an off-road type of feature that shows the path of the tires based on the steering wheel input.		
CHMSL (Center High Mounted Stop Lamp) Camera Dynamic Centerline — If Equipped	On	Off
NOTE: When the "CHMSL Camera Dynamic Centerline" feature is selected, it will assist in backing up for trailer alignment and hook up.		

Safety & Driving Assistance

After pressing the "Safety & Driving Assistance" button on the touchscreen, the following settings will be available:

Setting Name	Selectable Options		
Forward Collision Warning — If Equipped	Off	Warning Only	Warning & Active Braking
NOTE: Applies brakes to slow the vehicle in case of potential forward collision, or applies brakes and a warning.			
Forward Collision Warning Sensitivity — If Equipped	Near	Med	Far
NOTE: Sets the distance in which a Forward Collision Warning occurs.			
Front ParkSense Volume	Low	Med	High
Rear ParkSense Volume	Low	Med	High
Blind Spot Alert	Off	Lights	Lights & Chime
Power Side Step — If Equipped	Auto	Store	
Hill Start Assist — If Equipped	On	Off	
Tire Fill Assist — If Equipped	On	Off	

Mirrors & Wipers

After pressing the "Mirror and Wipers" button on the touchscreen, the following settings will be available:

Setting Name	Selectable Options	
Tilt Side Mirrors In Reverse — If Equipped	On	Off
NOTE: When the "Tilt Side Mirrors In Reverse" feature is selected, the outside side-view mirrors will tilt downward when the ignition is in the RUN position and the transmission gear selector is in the REVERSE position. The mirrors will move back to their previous position when the transmission is shifted out of REVERSE.		
Rain Sensing Auto Wipers	On	Off
NOTE: Automatically adjusts the wiper speed based on the amount of precipitation.		
Headlights with Wipers	On	Off

Lights

After pressing the “Lights” button on the touchscreen, the following settings will be available:

Setting Name	Selectable Options	
Headlight Illumination On Approach	–	+
NOTE: When the “Headlight Illumination On Approach” feature is selected, the headlights will activate and remain on for 0, 30, 60, or 90 seconds when the doors are unlocked with the key fob.		
Headlight Off Delay	-	+
NOTE: When the “Headlight Off Delay” feature is selected, the driver can choose to have the headlights remain on for 0, 30, 60, or 90 seconds when exiting the vehicle.		
Headlights With Wipers — If Equipped	On	Off
NOTE: When the “Headlights With Wipers” feature is selected, and the headlight switch is in the AUTO position, the headlights turn on approximately ten seconds after the wipers are turned on. The headlights also turn off when the wipers are turned off if they were turned on by this feature.		
Auto Dim High Beams — If Equipped	On	Off
NOTE: When the “Auto Dim High Beams” feature is selected, the high beam headlights deactivate automatically under certain conditions.		
Daytime Running Lights	On	Off

Setting Name	Selectable Options	
Flash Lights with Lock	On	Off
NOTE: When the “Flash Lights With Lock” feature is selected, the exterior lamps flash when the doors are locked or unlocked with the key fob. This feature may be selected with or without the sound horn on lock feature selected.		
Steering Directed Lights	On	Off
NOTE: When the “Steering Directed Lights” feature is selected, the headlights turn with the direction of the steering wheel.		
Rear Cargo Guidance Lights — If Equipped	On	Off
NOTE: When the “Rear Cargo Guidance Lights” feature is selected, the lights in the cargo and bed of the truck will come on either when the headlight switch is pressed, or the button on the back bed of the truck is pressed.		

Doors & Locks

After pressing the “Doors & Locks” button on the touchscreen, the following settings will be available:

Setting Name	Selectable Options	
Auto Door Locks	On	Off
Auto Unlock On Exit	On	Off
NOTE: When the “Auto Unlock On Exit” feature is selected, all doors unlock when the vehicle is stopped and the transmission is in the PARK or NEUTRAL position and the driver's door is opened.		

Setting Name	Selectable Options	
Flash Lights With Lock	On	Off
NOTE: When the “Flash Lights With Lock” feature is selected, the front and rear turn signals flash when the doors are locked or unlocked with the key fob. This feature may be selected with or without the “Sound Horn With Lock” feature selected.		
Sound Horn With Remote Start	On	Off
1st Press Of Key Fob Unlocks	Driver Door	All Doors
NOTE: • When “1st Press Of Key Fob Unlocks: Driver Door” is selected, only the driver's door unlocks on the first press of the key fob unlock button. You must push the key fob unlock button twice to unlock the passenger's doors. • When “All Doors” is selected, all of the doors unlock on the first push of the key fob unlock button. • If the vehicle is programmed “1st Press Of Key Fob Unlocks: All Doors”, all doors unlock no matter which Passive Entry equipped door handle is grasped. If “1st Press Of Key Fob Unlocks: Driver Door” is programmed, only the driver’s door unlocks when the driver’s door is grasped. • With Passive Entry, if “1st Press Of Key Fob Unlocks: Driver Door” is programmed pushing the handle more than once only resultsin the driver’s door opening. If “Driver Door” is selected, once the driver’s door is opened, the interior door lock/unlock switch can be used to unlock all doors (or use key fob).		
Passive Entry — If Equipped	On	Off

Setting Name	Selectable Options	
NOTE: The "Passive Entry" feature allows you to lock and unlock the vehicle's door(s) without having to push the key fob lock or unlock buttons.		
Personal Settings Linked To Key Fob — If Equipped	On	Off
NOTE: • The "Personal Settings Linked To Key Fob" feature provides automatic driver seat positioning to enhance driver mobility when entering and exiting the vehicle. • The seats return to the memorized seat location (if "Personal Settings Linked To Key Fob" is set to on) when the key fob is used to unlock the door.		

Auto Comfort Systems — If Equipped

After pressing the "Auto-On Comfort & Remote Start" button on the touchscreen, the following settings will be available:

Setting Name	Selectable Options		
Auto-On Driver Heated/ Vented Seat & Steering Wheel — If Equipped	Off	Remote Start	All Starts
NOTE: When the "Auto-On Driver Heated/Vented Seat & Steering Wheel" feature is selected, the driver's heated seat and heated steering wheel will automatically turn on when temperatures are below 40° F (4.4° C). When temperatures are above 80° F (26.7° C), the driver vented seat will turn on.			

Engine Off Options

After pressing the "Engine Off Options" button on the touchscreen, the following settings will be available:

Setting Name	Selectable Options	
Engine Off Power Delay	+	–
NOTE: When the "Engine Off Power Delay" feature is selected, the power window switches, radio, Uconnect phone system (if equipped), power sunroof (if equipped), and power outlets will remain active for up to ten minutes after the ignition is cycled to OFF. Opening either front door will cancel this feature.		
Headlight Off Delay	+	–
NOTE: When the "Headlight Off Delay" feature is selected, the driver can choose to have the headlights remain on for 0, 30, 60, or 90 seconds when exiting the vehicle.		
Auto Entry/Exit — If Equipped	On	Off
Easy Exit Seat — If Equipped	On	Off
NOTE: When the "Easy Exit Seat" feature is selected, the Driver's seat will automatically move rearward once the engine is shut off.		

Suspension — If Equipped

After pressing the "Suspension" button on the touchscreen, the following settings will be available:

Setting Name	Selectable Options		
Display Suspension Messages	All	Warning Only	
Tire Jack Mode	On	Off	
NOTE: When the "Tire Jack Mode" feature is selected, the air suspension system is disabled to assist with changing a spare tire.			
Transport Mode	On	Off	
NOTE: When the "Transport Mode" feature is selected, the air suspension system lowers and then disables to assist with flat bed towing.			
Wheel Alignment Mode	On	Off	
NOTE: Before performing a wheel alignment, the "Wheel Alignment Mode" must be enabled. Refer to an authorized dealer for further information.			
Four Corner Air Suspension Modes — If Equipped	Tire Jack Mode	Transport Mode	Wheel Alignment Mode
NOTE: There are four air suspension modes designed to protect the system in unique situations. Tire Jack Mode is selected to assist in changing a spare tire. Transport Mode is selected to assist when the vehicle is being flat bed towed. Wheel Alignment Mode is selected before performing a wheel alignment, refer to an authorized dealer for information.			

Trailer Brake

After pressing the “Trailer Brake” button on the touchscreen, the following settings will be available:

Setting Name	Selectable Options			
Trailer Select	Trailer 1	Trailer 2	Trailer 3	Trailer 4
NOTE: Once a Trailer is selected, press the “Use This Trailer” on the touchscreen to set this trailer as the one in current use. In each Trailer setting, the following settings appear:				
Braking	Light Electric	Heavy Electric	Light Electric over Hydraulic	Heavy Electric over Hydraulic
Trailer Name	List of Trailer Names Available			
NOTE: You can select and personalize your trailer name depending on the type of trailer you are hauling. Select the trailer name from the following list: trailer, boat, car, cargo, dump, equipment, flatbed, gooseneck, horse, livestock, motorcycle, snowmobile, travel, utility, and fifth wheel.				

Audio

After pressing the "Audio" button on the touchscreen, the following settings will be available:

Setting Name	Selectable Options			
Balance/Fade	Front	Right	Back	Left
NOTE: The "Balance/Fade" feature allows you to adjust the Balance and Fade settings. Press and drag the speaker icon or use the arrows to adjust, tap the "C" icon to readjust to the center.				
Equalizer	+		–	
NOTE: When in the "Equalizer" display you may adjust the Bass, Mid and Treble settings.				
Speed Adjusted Volume	Off	1	2	3
NOTE: The "Speed Adjusted Volume" feature increases or decreases volume relative to vehicle speed.				
Surround Sound — If Equipped	On		Off	
NOTE: The "Surround Sound" feature provides simulated surround sound mode.				

Setting Name	Selectable Options	
AUX Volume Offset — If Equipped	On	Off
NOTE: The "AUX Volume Offset" feature provides the ability to tune the audio level for portable devices connected through the AUX input.		
Auto Play	On	Off

Bluetooth

After pressing the "Bluetooth" button on the touchscreen, the following settings will be available:

Setting Name	Selectable Options	
Phone Pop-Ups Displayed in Cluster	On	Off
Do Not Disturb	List of Settings	
NOTE: Press "Do Not Disturb" to access the available settings. The following settings are: Auto Reply (both, text, call), Auto Reply Message (custom, default) and Custom Auto Reply Message (create message).		
Paired Phones and Audio Devices	List Of Paired Phones and Audio Sources	
NOTE: The "Paired Phones and Audio Sources" feature shows which phones and audio sources are paired to the Phone and Audio Sources Settings system. For further information, refer to the Uconnect Owner's Manual Supplement.		

Setting Name	Selectable Options	
Smartphone Device Mirroring	On	Off
Enable CarPlay Projections	On	Off
Automatically Display Pop-Ups in Cluster	On	Off
Set as Default Device	On	Off
Projection Manager	Smartphone Device Mirroring On	Smartphone Device Mirroring Off

SiriusXM Setup — If Equipped

After pressing the "SiriusXM Setup" button on the touchscreen, the following settings will be available:

Setting Name	Selectable Options	
Sirius All Access	Choose a Subscription Package	
Add Listener	Add up to five profiles	
NOTE: The "Add Listener" feature allows you to add up to five different profiles for customizing personal music or satellite radio choices.		
Listener Items	Listening History	List Of Options
Tune Start	On	Off

Setting Name	Selectable Options
NOTE: The “Tune Start” feature begins playing the current song from the beginning when you tune to a music channel using one of the twelve presets, so you can enjoy the complete song. This feature occurs the first time the preset is selected during that current song. Tune Start works in the background, so you will not even realize it's on, except that you will miss the experience of joining your favorite song with only a few seconds left to play.	
Channel Skip	List of Channels
NOTE: SiriusXM can be programmed to designate a group of channels that are the most desirable to listen to or to exclude undesirable channels while scanning. This feature allows you to select the channels you would like to skip.	
Subscription Info	Sirius ID
NOTE: New vehicle purchasers or lessees will receive a free limited time subscription to SiriusXM Satellite Radio with your radio. Following the expiration of the free services, it will be necessary to access the information on the Subscription Information screen to re-subscribe. 1. Press the “Subscription Info” button on the touchscreen to access the Subscription Information screen. 2. Write down the Sirius ID numbers for your receiver. To reactivate your service, either call the number listed on the screen or visit the provider online. SiriusXM Travel Link is a separate subscription.	

Reset

After pressing the “Reset” button on the touchscreen, the following settings will be available:

Setting Name	Selectable Options	
Reset App Drawer	Yes	Cancel
Restore Settings	Yes	Cancel
NOTE: When the “Restore Settings” feature is selected it resets all settings to their default settings.		
Clear Personal Data	Yes	Cancel
NOTE: When the “Clear Personal Data” feature is selected it removes all personal data including Bluetooth devices and presets.		
Clear Sirius XM Data	Yes	Cancel

System Information

After pressing the “System Information” button on the touchscreen, the following settings will be available:

Setting Name	Selectable Options
System Information	System Software Information Screen
NOTE: When the “System Information” feature is selected, a “System Software Information” screen will appear, displaying the system software version.	

STEERING WHEEL AUDIO CONTROLS — IF EQUIPPED

The remote sound system controls are located on the back surface of the steering wheel. Reach behind the wheel to access the switches.

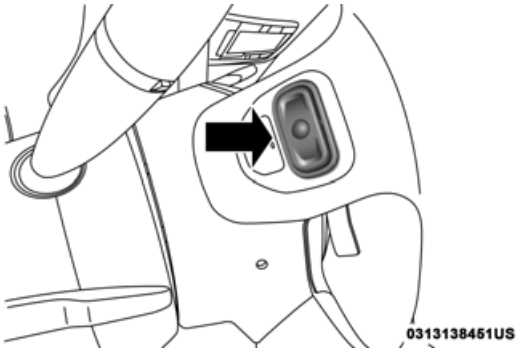

Steering Wheel Audio Controls (Rearview Of Steering Wheel)

The right hand control is a rocker type switch with a push-button in the center. Pushing the top of the switch will increase the volume, and pushing the bottom of the switch will decrease the volume.

Pushing the center button will make the radio switch between the various modes available (AM/FM/SXM or Media etc.).

The left hand control is a rocker type switch with a push-button in the center. The function of the left hand control is different depending on which mode you are in.

The following describes the left hand control operation in each mode.

Radio Operation

Pushing the top of the switch will SEEK up for the next listenable station and pushing the bottom of the switch will SEEK down for the next listenable station.

The button located in the center of the left-hand control will tune to the next preset station that you have programmed in the radio preset button.

Media Mode

Pushing the top of the switch once will go to the next track on the selected media (AUX/USB/Bluetooth/CD). Pushing the bottom of the switch once goes to the beginning of the current track, or to the beginning of the previous track if it is within eight seconds after the current track begins to play.

IPOD/USB/MP3 CONTROL — IF EQUIPPED

Located on the center stack, just below the instrument panel, is the main media hub. There are four total USB Ports : Two Mini-USBs (Type C) and two Standard USBs (Type A). There is also an AUX Port located in the middle of the USB Ports. All four of the USB Ports include a USB Trident and a numerical value one through three, which indicates that the vehicle can support three fully-functioning USB Ports at a time. Each USB Port will support media and charging simultaneously.

NOTE:

- The Type C USB port is the primary media port for the radio. Two devices can be plugged in at the same time and both ports provide charging capabilities, but only one port can transfer data to the head unit at a time.
- Both ports share a single data connection. However, the user cannot switch between Type A or Type C.

For example, if a device is plugged into the Type A USB port and another device is plugged into the Type C port, connection to the Type A port will be lost. Alternatively, if a device is plugged into the Type C port and another device is plugged into the Type A port, the Type C device maintains primary connection.

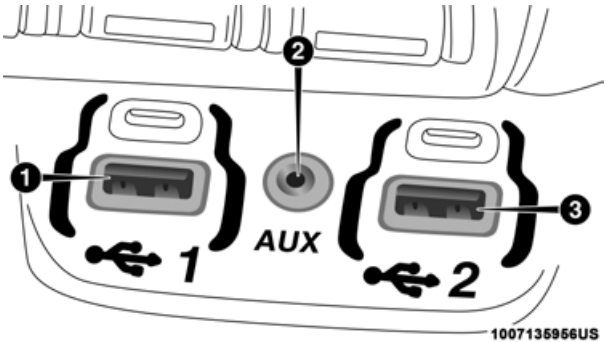

Center Stack USB/AUX Media Hub

1 — Standard USB Type A Port #1
2 — AUX Port
3 — Standard USB Type A Port #2

A third and fourth USB Ports are located behind the center console, above the Power Inverter. One is a charge only port, and can only charge USB devices. The other USB Port allows you to play music from iPod/MP3 players or USB devices through your vehicle's sound system.

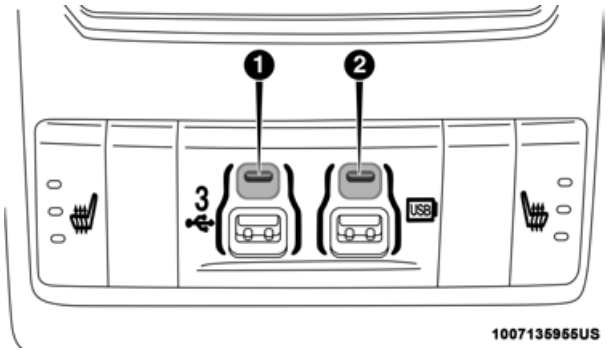

Rear Center Console Mini-USB (Type C) USB Ports

1 — Mini-USB Type C Port #1

2 — Mini-USB Type C Port #2

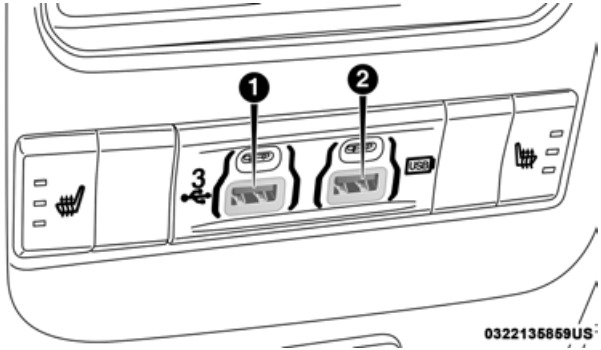

Rear Center Console Standard (Type A) USB Ports

1 — Standard USB Type A Port #1

2 — Standard USB Type A Port #2

Applicable to only Uconnect 4/4 NAV With 8.4–inch Display, and Uconnect 4 NAV With 12–inch Display radios, different scenarios are shown below when a non-phone device is plugged into the smaller and larger USB Ports, and when a phone device is plugged into the smaller and larger USB Ports:

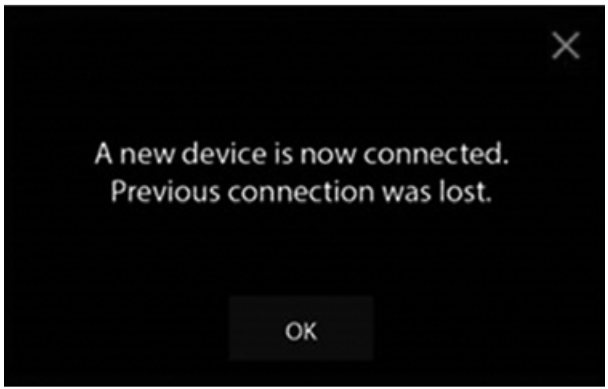

Device Plugged In Message Screen

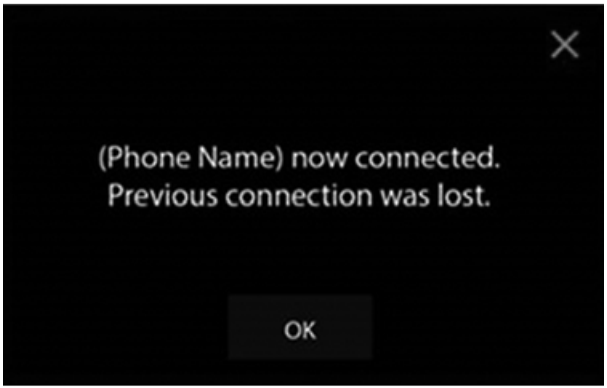

Phone Plugged In Message Screen

Phone Or USB Plugged In Message Screen

Plugging in a phone or another USB device may cause the connection to a previous device to be lost.

If equipped, your vehicle may also contain a USB Port located on the top tray of the vehicles center console.

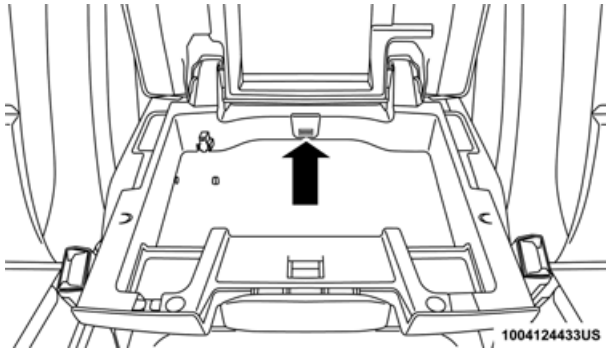

Center Console USB Port

If equipped, two Mini-USB Ports (Type C), two Standard USB Ports (Type A), and one AUX Port may be located to the left of the center stack, just below the climate controls.

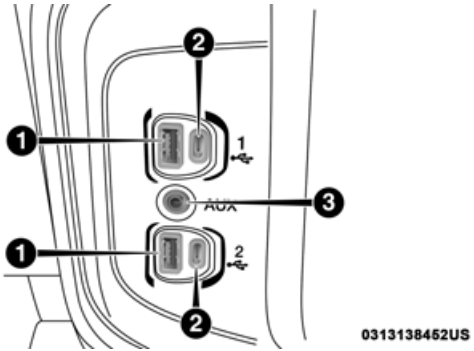

Center Console USB/AUX Media Hub

1 — Standard USB Type A Ports
2 — Mini-USB Type C Ports
3 — AUX Port

Some USB ports support media and charging. You can use features, such as Apple CarPlay, Android Auto, Pandora and others while charging your phone.

NOTE:
Plugging in a phone or another USB device may cause the connection to a previous device to be lost.

For further information, refer to the Uconnect Owner's Manual Supplement or visit UconnectPhone.com.

RADIO OPERATION AND MOBILE PHONES

Under certain conditions, the mobile phone being on in your vehicle can cause erratic or noisy performance from your radio. This condition may be lessened or eliminated by relocating the mobile phone antenna. This condition is not harmful to the radio. If your radio performance does not satisfactorily "clear" by the repositioning of the antenna, it is recommended that the radio volume be turned down or off during mobile phone operation when not using Uconnect (if equipped).

Regulatory And Safety Information

USA/CANADA

Exposure to Radio Frequency Radiation

The radiated output power of the internal wireless radio is far below the FCC and IC radio frequency exposure limits. Nevertheless, the wireless radio will be used in such a manner that the radio is 8 in (20 cm) or further from the human body.

The internal wireless radio operates within guidelines found in radio frequency safety standards and recommendations, which reflect the consensus of the scientific community.

The radio manufacturer believes the internal wireless radio is safe for use by consumers. The level of energy emitted is far less than the electromagnetic energy emitted by wireless devices such as mobile phones. However, the use of wireless radios may be restricted in some situations or environments, such as aboard airplanes. If you are unsure of restrictions, you are encouraged to ask for authorization before turning on the wireless radio.

The following regulatory statement applies to all Radio Frequency (RF) devices equipped in this vehicle:

This device complies with Part 15 of the FCC Rules and with Industry Canada license-exempt RSS standard(s). Operation is subject to the following two conditions:

1. This device may not cause harmful interference, and
2. This device must accept any interference received, including interference that may cause undesired operation.

NOTE:
Changes or modifications not expressly approved by the party responsible for compliance could void the user's authority to operate the equipment.

NOTE:

- This equipment has been tested and found to comply with the limits for a Class B digital device, pursuant to Part 15 of the FCC Rules. These limits are designed to provide reasonable protection against harmful interference in a residential installation. This equipment generates, uses and can radiate radio frequency energy and, if not installed and used in accordance with the instructions, may cause harmful interference to radio communications. However, there is no guarantee that interference will not occur in a particular installation.

- If this equipment does cause harmful interference to radio or television reception, which can be determined by turning the equipment off and on, the user is encouraged to try to correct the interference by one or more of the following measures:
  1. Increase the separation between the equipment and receiver.
  2. Consult an authorized dealer or an experienced radio technician for help.

VOICE COMMANDS

Introducing Uconnect

Start using Uconnect Voice Recognition with these helpful quick tips. It provides the key Voice Commands and tips you need to know to control your Uconnect system.

If you see the NAV icon on the bottom bar, or in the Apps menus, of your touchscreen, you have the Uconnect 4C NAV With 8.4–inch Display or the Uconnect 4C NAV With 12–inch Display system. If not, you have a Uconnect 4C With 8.4–inch Display system.

Get Started

All you need to control your Uconnect system with your voice are the buttons on your steering wheel.

1. Visit UconnectPhone.com to check mobile device and feature compatibility and to find phone pairing instructions.
2. Reduce background noise. Wind noise and passenger conversations are examples of noise that may impact recognition.
3. Speak clearly at a normal pace and volume while facing straight ahead. The microphone is located in the headliner and aimed at the driver.
4. Each time you give a Voice Command, you must first push either the VR or Phone button, wait until **after** the beep, then say your Voice Command.

5. You can interrupt the help message or system prompts by pushing the VR or Phone button and saying a Voice Command from current category.

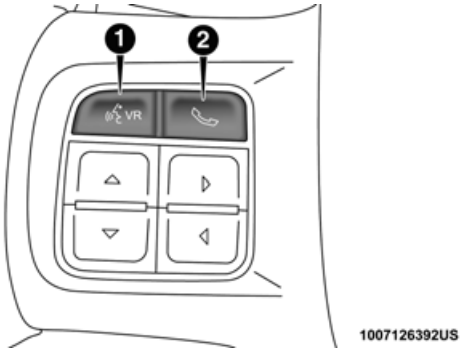

Uconnect Voice Command Buttons

1 — Push To Begin Radio Or Media Functions

2 — Push To Initiate, Answer, End A Phone Call, Or Send/Receive A Text

Basic Voice Commands

The basic Voice Commands below can be given at any point while using your Uconnect system.

Push the VR button. After the beep, say:

- "**Cancel**" to stop a current voice session
- "**Help**" to hear a list of suggested Voice Commands
- "**Repeat**" to listen to the system prompts again

Notice the visual cues that inform you of your voice recognition system's status. Cues appear on the top of the touchscreen.

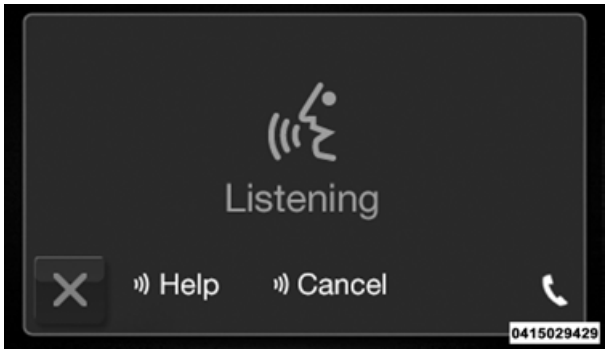

Uconnect 3 With 5–inch Display

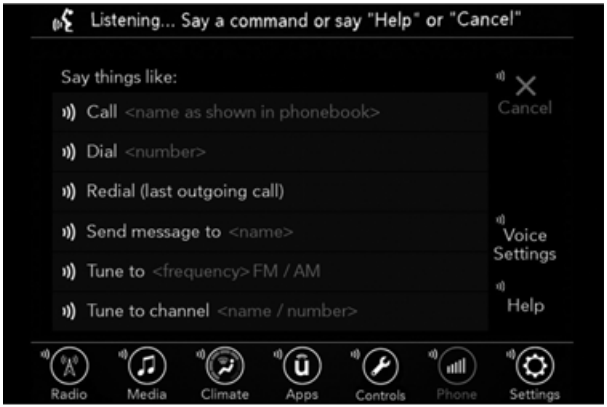

Uconnect 4/4C/4C NAV With 8.4–inch Display

Uconnect 4C NAV With 12–inch Display

Radio

Use your voice to quickly get to the AM, FM or SiriusXM Satellite Radio stations you would like to hear. (Subscription or included SiriusXM Satellite Radio trial required.)

Push the VR button. After the beep, say:

- "**Tune to** ninety-five-point-five FM"
- "**Tune to Satellite Channel** Hits 1"

TIP:
At any time, if you are not sure of what to say or want to learn a Voice Command, push the VR button and say "**Help**." The system provides you with a list of commands.

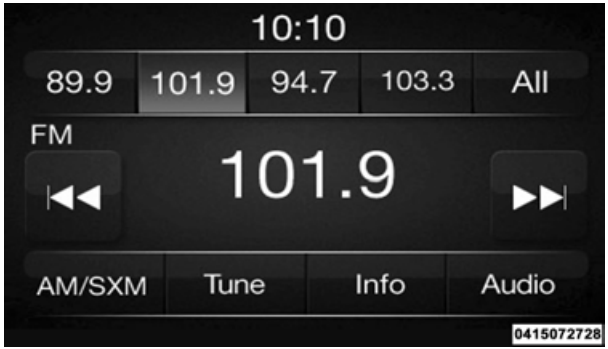

Uconnect 3 Radio

Uconnect 4/4C/4C NAV With 8.4–inch Display

Uconnect 4C NAV With 12–inch Display

Media

Uconnect offers connections via USB, Bluetooth and auxiliary ports (If Equipped). Voice operation is only available for connected USB and AUX devices. (Remote CD player optional and not available on all vehicles.)

Push the VR button . After the beep, say one of the following commands and follow the prompts to switch your media source or choose an artist.

- "**Change source to** Bluetooth"
- "**Change source to** AUX"
- "**Change source to** USB"
- "**Play artist** Beethoven"; "**Play album** Greatest Hits"; "**Play song** Moonlight Sonata"; "**Play genre** Classical"

TIP:
Press the Browse button on the touchscreen to see all of the music on your USB device. Your Voice Command must match **exactly** how the artist, album, song and genre information is displayed.

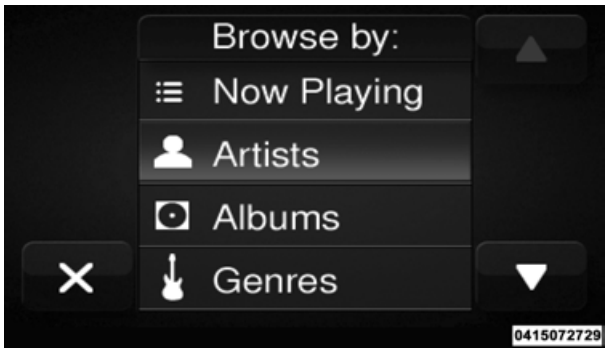

Uconnect 3 Media

Uconnect 4/4C/4C NAV With 8.4–inch Display

Uconnect 4C NAV With 12–inch Display

Phone

Making and answering hands-free phone calls is easy with Uconnect. When the Phonebook button is illuminated on your touchscreen, your system is ready. Check Uconnect-Phone.com for mobile phone compatibility and pairing instructions.

Push the Phone button. After the beep, say one of the following commands:

- "**Call** John Smith"
- "**Dial** 123-456-7890 and follow the system prompts"
- "**Redial** (call previous outgoing phone number)"
- "**Call back** (call previous incoming phone number)"

TIP:
When providing a Voice Command, push the Phone button and say "**Call**," then pronounce the name **exactly** as it appears in your phone book. When a contact has multiple phone numbers, you can say "**Call** John Smith **work**."

Uconnect 3 Phone

Uconnect 4/4C/4C NAV With 8.4–inch Display

Uconnect 4C NAV With 12–inch Display

Voice Text Reply — If Equipped

Uconnect announces **incoming** text messages. Push the VR button or Phone button (if enabled) and say "**Listen**." (Must have compatible mobile phone paired to Uconnect system.)

1. Once an incoming text message is read to you, push the VR button or Phone button (if enabled). After the beep, say: "**Reply**."
2. Listen to the Uconnect prompts. After the beep, repeat one of the pre-defined messages and follow the system prompts.

PRE-DEFINED VOICE TEXT REPLY RESPONSES		
Yes.	Stuck in traffic.	See you later.
No.	Start without me.	I'll be late.
Okay.	Where are you?	I will be 5 <or 10, 15, 20, 25, 30, 45, 60> minutes late.
Call me.	Are you there yet?	
I'll call you later.	I need directions.	See you in 5 <or 10, 15, 20, 25, 30, 45, 60> minutes.
I'm on my way.	Can't talk right now.	
I'm lost.		Thanks.

NOTE:
Only use the numbering listed, otherwise the system does not transpose the message.

TIP:
Your mobile phone must have the full implementation of the **Message Access Profile (MAP)** to take advantage of this feature. For details about MAP, visit UconnectPhone.com.

Apple iPhone iOS 6 or later supports reading **incoming** text messages only. To enable this feature on your Apple iPhone, follow these four simple steps:

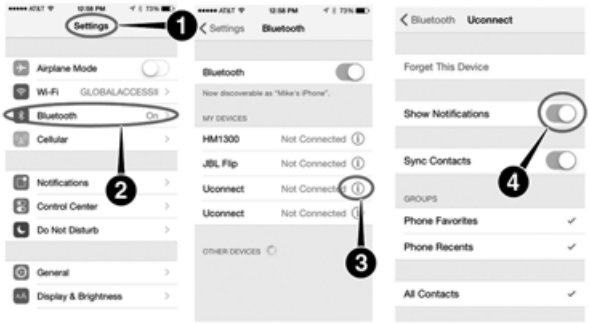

iPhone Notification Settings

1 — Select "Settings"
2 — Select "Bluetooth"
3 — Select The (i) For The Paired Vehicle
4 — Turn On "Show Notifications"

TIP:
Voice Text Reply is not compatible with iPhone, but if your vehicle is equipped with Siri Eyes Free, you can use your voice to send a text message.

Climate (4C/4C NAV)

Too hot? Too cold? Adjust vehicle temperatures hands-free and keep everyone comfortable while you keep moving ahead. (If vehicle is equipped with climate control.)

Push the VR button . After the beep, say one of the following commands:

- "**Set driver temperature to** 70 **degrees**"
- "**Set passenger temperature to** 70 **degrees**"

TIP:
Voice Command for Climate may only be used to adjust the interior temperature of your vehicle. Voice Command will not work to adjust the heated seats or steering wheel if equipped.

Uconnect 4/4C/4C NAV With 8.4–inch Display Climate

Uconnect 4C NAV With 12–inch Display Climate

Navigation (4C NAV)

The Uconnect navigation feature helps you save time and become more productive when you know exactly how to get to where you want to go.

1. To enter a destination, push the VR button . After the beep, say: "**Find address** 800 Chrysler Drive Auburn Hills, Michigan."
2. Then follow the system prompts.

TIP:
To start a POI search, push the VR button . After the beep, say: "**Find nearest** coffee shop."

Uconnect 4C NAV WIth 8.4–inch Display Navigation

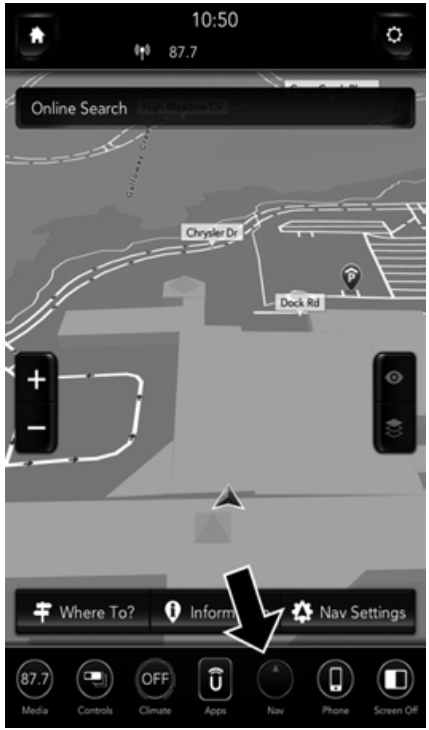

Uconnect 4C NAV WIth 12–inch Display Navigation

SiriusXM Guardian (4C/4C NAV) — If Equipped

CAUTION!
Some SiriusXM Guardian services, including SOS Call and Roadside Assistance Call will NOT work without an operable LTE (voice/data) or 3G or 4G (data) network connection compatible with your device.

NOTE:
Your vehicle may be transmitting data as authorized by the subscriber.

An included trial and/or subscription is required to take advantage of the SiriusXM Guardian services in the next section of this guide. To register with SiriusXM Guardian, press the Apps button on your 8.4-inch or 12–inch touch-screen to get started.

NOTE:
SiriusXM Guardian is available only on equipped vehicles purchased within the continental United States, Alaska, Hawaii, and Canada. Services can only be used where coverage is available; see coverage map for details.

SOS Call

Theft Alarm Notification

Remote Door Lock/Unlock

Send & Go

Vehicle Finder-If Equipped

Stolen Vehicle Assistance

Remote Vehicle Start**

Remote Horn & Lights

Roadside Assistance Call

Vehicle Health Reports-If Equipped**

Vehicle Health Alert**

Performance Pages Plus**

- **If vehicle is equipped.

Register (4C/4C NAV)

To unlock the full potential of SiriusXM Guardian in your vehicle, you must activate your SiriusXM Guardian services.

1. Press the Apps icon on the bottom of your in-vehicle touchscreen.
2. Select the Activate Services icon from your list of apps.
3. Select "Customer Care" to speak with a SiriusXM Guardian Customer Care agent who will activate services in your vehicle, or select "Enter Email" to activate on the web.

For further information:

- U.S. residents visit: siriusxm.com/guardian
- Canadian residents visit: siriusxm.ca/guardian

Mobile App (4C/4C NAV)

You're only a few steps away from using remote commands and playing your favorite music in your car.

Mobile App

To use the Uconnect App:

- Download the Uconnect App to your mobile device.
- Press the Info button on the navigation bar at the bottom of the app for Vehicle Info.
- Press the Remote button on the navigation bar at the bottom of the app to Lock/Unlock, Remote Start, and activate your horn and lights remotely.

- Press the Location button on the navigation bar at the bottom of the app to bring up a map to locate your vehicle or send a location to your vehicle's navigation system.
- Press the Settings button in the upper left corner of the app to bring up app settings and access the Assist Call Centers.

NOTE:
For further information please visit DriveUconnect.com(U.S. Residents) or DriveUconnect.ca (Canadian Residents).

SiriusXM Travel Link (4C NAV)

Need to find a gas station, view local movie listings, check a sports score or the 5 - day weather forecast? SiriusXM Travel Link is a suite of services that brings a wealth of information right to your Uconnect 4C NAV system.

Push the VR button . After the beep, say one of the following commands:

- "**Show fuel prices**"
- "**Show 5 - day weather forecast**"
- "**Show extended weather**"

TIP:
Traffic alerts are not accessible with Voice Command.

Uconnect 4C NAV With 8.4–inch Display SiriusXM Travel Link

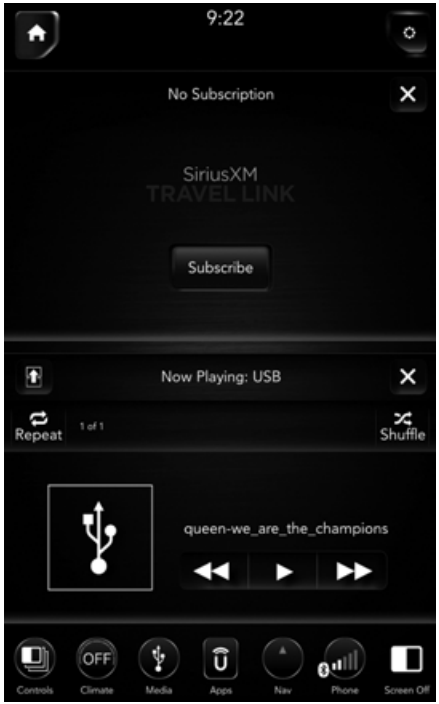

Uconnect 4C NAV With 12–inch Display SiriusXM Travel Link

Siri Eyes Free — If Equipped

Siri lets you use your voice to send text messages, select media, place phone calls and much more. Siri uses your natural language to understand what you mean and responds back to confirm your requests. The system is designed to keep your eyes on the road and your hands on the wheel by letting Siri help you perform useful tasks.

To enable Siri, push and hold, then release the Uconnect Voice Recognition (VR) button on the steering wheel. After you hear a double beep you can ask Siri to play podcasts and music, get directions, read text messages and many other useful requests.

Uconnect 4C/4C NAV With 8.4–inch Siri Eyes Free Available

Uconnect 4C NAV With 12–inch Siri Eyes Free Available

Using Do Not Disturb

With Do Not Disturb, you can disable notifications from incoming calls and texts, allowing you to keep your eyes on the road and hands on the wheel. For your convenience, there is a counter display to keep track of your missed calls and text messages while you were using Do Not Disturb.

Do Not Disturb can automatically reply with a text message, a call, or both, when declining an incoming call and send it to voicemail.

Automatic reply messages can be:

- "I am driving right now, I will get back to you shortly."
- Create a custom auto reply message up to 160 characters.

While in Do Not Disturb, Conference Call can be selected so you can still place a second call without being interrupted by incoming calls.

NOTE:

- Only the beginning of your custom message will be seen on the touchscreen.
- Reply with text message is not compatible with iPhones.
- Auto reply with text message is only available on phones that support Bluetooth MAP.

Android Auto — If Equipped

NOTE:
Feature availability depends on your carrier and mobile phone manufacturer. Some Android Auto features may or may not be available in every region and/or language.

Android Auto allows you to use your voice to interact with Android's best-in-class speech technology through your vehicle's voice recognition system, and use your smartphone's data plan to project your Android powered smartphone and a number of its apps onto your Uconnect touchscreen. Connect your Android 5.0 (Lollipop), or higher, to one of the media USB ports, using the factory-provided USB cable, and press the new Android Auto icon that replaces your "Phone" icon on the main menu bar to begin Android Auto. Push and hold the VR button on the steering wheel, or press and hold the "Microphone" icon within Android Auto, to activate Android's VR, which recognizes natural voice commands, to use a list of your smartphone's features:

- Maps
- Music
- Phone
- Text Messages
- Additional Apps

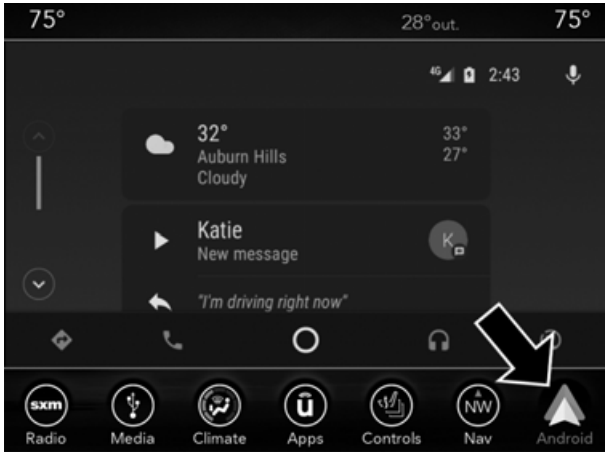

Uconnect 4/4C/4C NAV With 8.4–inch Display Android Auto

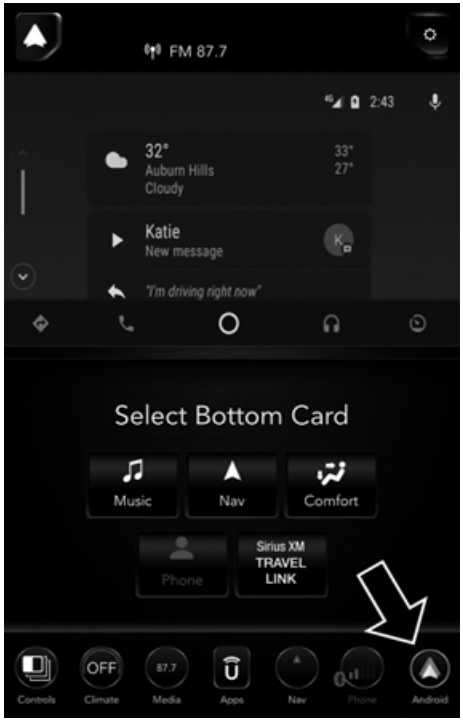

Uconnect 4C NAV With 12–inch Display Android Auto

Refer to your Uconnect Owner's Manual Supplement for further information.

NOTE:
Requires compatible smartphone running Android 5.0 Lollipop or higher and download app on Google Play. Android, Android Auto, and Google Play are trademarks of Google Inc.

Apple CarPlay — If Equipped

NOTE:
Feature availability depends on your carrier and mobile phone manufacturer. Some Apple CarPlay features may or may not be available in every region and/or language.

Apple CarPlay allows you to use your voice to interact with Siri through your vehicle's voice recognition system, and use your smartphone's data plan to project your iPhone and a number of its apps onto your Uconnect touchscreen. Connect your iPhone 5, or higher, to one of the media USB ports, using the factory-provided Lightning cable, and press the new CarPlay icon that replaces your "Phone" icon on the main menu bar to begin Apple CarPlay. Press and hold the VR button on the steering wheel, or press and hold the "Home" button within Apple CarPlay, to activate Siri, which recognizes natural voice commands to use a list of your iPhone's features:

- Phone
- Music
- Messages
- Maps
- Additional Apps

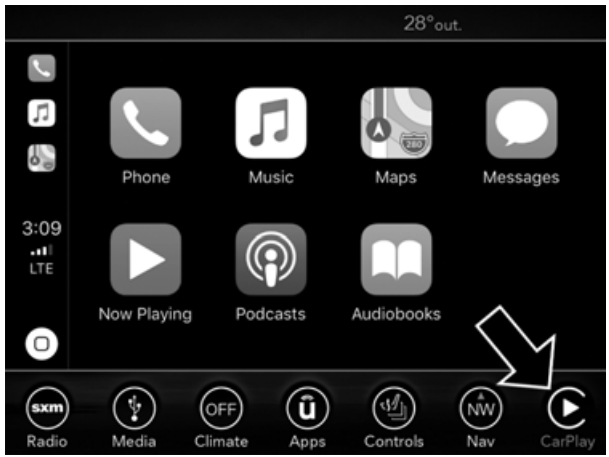

Uconnect 4/4C/4C NAV With 8.4–inch Display Apple CarPlay

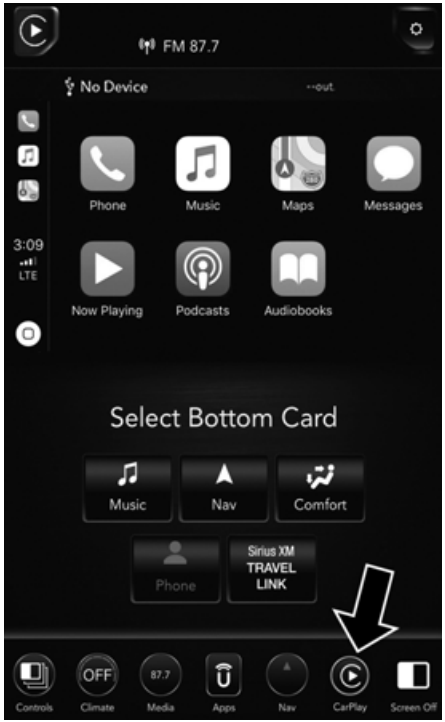

Uconnect 4C NAV With 12–inch Display Apple CarPlay

Refer to your Uconnect Owner's Manual Supplement for further information.

NOTE:
Requires compatible iPhone. See dealer for phone compatibility. Data plan rates apply. Vehicle user interface is a product of Apple. Apple CarPlay is a trademark of Apple Inc. iPhone is a trademark of Apple Inc., registered in the US and other countries. Apple terms of use and privacy statements apply.

General Information

The following regulatory statement applies to all Radio Frequency (RF) devices equipped in this vehicle:

This device complies with Part 15 of the FCC Rules and with Industry Canada license-exempt RSS standard(s). Operation is subject to the following two conditions:

1. This device may not cause harmful interference, and
2. This device must accept any interference received, including interference that may cause undesired operation.

NOTE:
Changes or modifications not expressly approved by the party responsible for compliance could void the user's authority to operate the equipment.

Additional Information

© 2019 FCA US LLC. All rights reserved. Mopar and Uconnect are registered trademarks and Mopar Owner Connect is a trademark of FCA US LLC. Android is a trademark of Google Inc. SiriusXM and all related marks and logos are trademarks of SiriusXM Radio Inc.

Uconnect System Support:

- U.S. residents visit www.DriveUconnect.com or call: 1-877-855-8400(24 hours a day 7 days a week)
- Canadian residents visit www.DriveUconnect.ca or call: 1-800-465-2001(English) or 1-800-387-9983(French)

SiriusXM Guardian services support:

- U.S. residents visit www.siriusxm.com/guardian or call: 1-844-796-4827
- Canadian residents visit www.siriusxm.ca/guardian or call: 1-877-324-9091

CD/DVD DISC MAINTENANCE

To keep a CD/DVD in good condition, take the following precautions:

- Handle the disc by its edge; avoid touching the surface.
- If the disc is stained, clean the surface with a soft cloth, wiping from center to edge.
- Do not apply paper or tape to the disc; avoid scratching the disc.
- Do not use solvents such as benzene, thinner, cleaners, or anti-static sprays.
- Store the disc in its case after playing.
- Do not expose the disc to direct sunlight.
- Do not store the disc where temperatures may become too high.

NOTE:
If you experience difficulty in playing a particular disc, it may be damaged (e.g., scratched, reflective coating removed, a hair, moisture or dew on the disc), oversized, or have protection encoding. Try a known good disc before considering disc player service.

CUSTOMER ASSISTANCE

SUGGESTIONS FOR OBTAINING SERVICE FOR YOUR VEHICLE

Prepare For The Appointment

If you are having warranty work done, be sure to have the right papers with you. Take your warranty folder. All work to be performed may not be covered by the warranty. Discuss additional charges with the service manager. Keep a maintenance log of your vehicle's service history. This can often provide a clue to the current problem.

Prepare A List

Make a written list of your vehicle's problems or the specific work you want done. If you've had an accident or work done that is not on your maintenance log, let the service advisor know.

Be Reasonable With Requests

If you list a number of items and you must have your vehicle by the end of the day, discuss the situation with the service advisor and list the items in order of priority. At many authorized dealers, you may obtain a rental vehicle at a minimal daily charge. If you need a rental, it is advisable to make these arrangements when you call for an appointment.

IF YOU NEED ASSISTANCE

The manufacturer and its authorized dealer are vitally interested in your satisfaction. We want you to be happy with our products and services.

Warranty service must be done by an authorized dealer. We strongly recommend that you take the vehicle to an authorized dealer. They know your vehicle the best, and are most concerned that you get prompt and high quality service. The manufacturer's authorized dealer have the facilities, factory-trained technicians, special tools, and the latest information to ensure the vehicle is fixed correctly and in a timely manner.

This is why you should always talk to an authorized dealer service manager first. Most matters can be resolved with this process.

- If for some reason you are still not satisfied, talk to the general manager or owner of the authorized dealer. They want to know if you need assistance.
- If an authorized dealer is unable to resolve the concern, you may contact the manufacturer's customer center.

Any communication to the manufacturer's customer center should include the following information:

- Owner's name and address
- Owner's telephone number (home and office)
- Authorized dealer name
- Vehicle Identification Number (VIN)
- Vehicle delivery date and mileage

FCA US LLC Customer Center

P.O. Box 21–8004

Auburn Hills, MI 48321–8004

Phone: (866) 726-4636

FCA Canada Inc. Customer Center

P.O. Box 1621

Windsor, Ontario N9A 4H6

Phone: (800) 465-2001 English / (800) 387-9983 French

In Mexico Contact

Av. Prolongacion Paseo de la Reforma, 1240

Sante Fe C.P. 05109

Mexico, D. F.

In Mexico City: 800-505-1300

Outside Mexico City: +(52)55 50817568

Puerto Rico And U.S. Virgin Islands

FCA Caribbean LLC

P.O. Box 191857

San Juan 00919-1857

Phone: (866) 726-4636

Fax: (787) 782-3345

Customer Assistance For The Hearing Or Speech Impaired (TDD/TTY)

To assist customers who have hearing difficulties, the manufacturer has installed special TDD (Telecommunication Devices for the Deaf) equipment at its customer center. Any hearing or speech impaired customer, who has access to a TDD or a conventional teletypewriter (TTY) in the United States, can communicate with the manufacturer by dialing 1-800-380-CHRY.

Canadian residents with hearing difficulties that require assistance can use the special needs relay service offered by Bell Canada. For TTY teletypewriter users, dial 711 and for Voice callers, dial 1-800-855-0511 to connect with a Bell Relay Service operator.

Service Contract

You may have purchased a service contract for a vehicle to help protect you from the high cost of unexpected repairs after the manufacturer's New Vehicle Limited Warranty expires. The manufacturer stands behind only the manufacturer's service contracts. If you purchased a manufacturer's service contract, you will receive Plan Provisions and an Owner Identification Card in the mail within three weeks of the vehicle delivery date. If you have any questions about the service contract, call the manufacturer's Service Contract National Customer Hotline at 1-800-521-9922 (Canadian residents, call (800) 465-2001 English / (800) 387-9983 French).

The manufacturer will not stand behind any service contract that is not the manufacturer's service contract. It is not responsible for any service contract other than the manufacturer's service contract. If you purchased a service contract that is not a manufacturer's service contract, and you require service after the manufacturer's New Vehicle Limited Warranty expires, please refer to the contract documents, and contact the person listed in those documents.

We appreciate that you have made a major investment when you purchased the vehicle. An authorized dealer has also made a major investment in facilities, tools, and training to assure that you are absolutely delighted with the ownership experience. You will be pleased with their sincere efforts to resolve any warranty issues or related concerns.

WARNING!
Engine exhaust (internal combustion engines only), some of its constituents, and certain vehicle components contain, or emit, chemicals known to the State of California to cause cancer and birth defects, or other reproductive harm. In addition, certain fluids contained in vehicles and certain products of component wear contain, or emit, chemicals known to the State of California to cause cancer and birth defects, or other reproductive harm.

WARRANTY INFORMATION

See the Warranty Information Booklet for the terms and provisions of FCA US LLC warranties applicable to this vehicle and market.

MOPAR PARTS

Mopar fluids, lubricants, parts, and accessories are available from an authorized dealer. They are recommended for your vehicle in order to help keep the vehicle operating at its best.

REPORTING SAFETY DEFECTS

In The 50 United States And Washington, D.C.

If you believe that your vehicle has a defect that could cause a crash or cause injury or death, you should immediately inform the National Highway Traffic Safety Administration (NHTSA) in addition to notifying FCA US LLC.

If NHTSA receives similar complaints, it may open an investigation, and if it finds that a safety defect exists in a group of vehicles, it may order a recall and remedy campaign. However, NHTSA cannot become involved in individual problems between you, an authorized dealer or FCA US LLC.

To contact NHTSA, you may call the Vehicle Safety Hotline toll free at 1-888-327-4236 (TTY: 1-800-424-9153); or go to http://www.safercar.gov; or write to: Administrator, NHTSA, 1200 New Jersey Avenue, SE., West Building, Washington, D.C. 20590. You can also obtain other information about motor vehicle safety from http://www.safercar.gov.

In Canada

If you believe that your vehicle has a safety defect, you should contact the Customer Service Department immediately. Canadian customers who wish to report a safety defect to the Canadian government should contact Transport Canada, Motor Vehicle Defect Investigations and Recalls at 1-800-333-0510 or go to http://www.tc.gc.ca/roadsafety/.

PUBLICATION ORDER FORMS

To order the following manuals, you may use either the website or the phone numbers listed below.

Service Manuals

These comprehensive Service Manuals provide the information that students and professional technicians need in diagnosing/troubleshooting, problem solving, maintaining, servicing, and repairing FCA US LLC vehicles. A complete working knowledge of the vehicle, system, and/or components is written in straightforward language with illustrations, diagrams, and charts.

Diagnostic Procedure Manuals

Diagnostic Procedure Manuals are filled with diagrams, charts and detailed illustrations. These practical manuals make it easy for students and technicians to find and fix problems on computer-controlled vehicle systems and features. They show exactly how to find and correct problems the first time, using step-by-step troubleshooting and drivability procedures, proven diagnostic tests and a complete list of all tools and equipment.

Owner's Manuals

These Owner's Manuals have been prepared with the assistance of service and engineering specialists to acquaint you with specific FCA US LLC vehicles. Included are starting, operating, emergency and maintenance procedures as well as specifications, capabilities and safety tips.

Call toll free at:

- 1-800-890-4038 (U.S.)
- **1-800-387-1143 (Canada)**

Or

Visit us on the Worldwide Web at:

- www.techauthority.com (U.S.)

INDEX

A

Adaptive Cruise Control (ACC) (Cruise Control) 357
Adding Engine Coolant (Antifreeze) 524
Adding Fuel 408
Additives, Fuel 568
Adjust
  Down 44
  Forward 44
  Rearward 44
  Up 44
Adjustable Pedals 56
Air Bag
  Air Bag Operation 249
  Air Bag Warning Light 245
  Enhanced Accident Response 255, 498
  Event Data Recorder (EDR) 498
  If Deployment Occurs 254
  Knee Impact Bolsters 249
  Maintaining Your Air Bag System 256
  Maintenance 256
  Transporting Pets 286
Air Bag Light 180, 245, 287
Air Cleaner, Engine (Engine Air Cleaner Filter) 509
Air Conditioner Maintenance 511
Air Conditioner Refrigerant 511, 512
Air Conditioner System 511
Air Conditioning 79, 90
Air Conditioning Filter 93, 512
Air Conditioning System 91
Air Conditioning, Operating Tips 91
Air Filter 509
Air Pressure
  Tires 542
Alarm
  Panic 19
  Security Alarm 32, 181
Alterations/Modifications
  Vehicle 15
Android Auto 668
Antifreeze (Engine Coolant) 523, 571
  Disposal 525
Anti-Lock Brake System (ABS) 195
Anti-Lock Warning Light 187
Apple CarPlay 670
Assist, Hill Start 198
Audio Systems (Radio) 575
Auto Down Power Windows 95
Auto Unlock, Doors 306

Automatic Door Locks 39
Automatic Headlights 69
Automatic Tailgate Release 102
Automatic Temperature Control (ATC) 91
Automatic Transmission 301, 529
  Adding Fluid 529
  Fluid And Filter Change 529
  Fluid Change 529
  Fluid Level Check 528, 529
  Fluid Type 528, 574
  Special Additives 528
Automatic Transmission Limp Home Mode 306
Auxiliary Driving Systems 208
Axle Fluid 529, 574
Axle Lubrication 529

B

Back-Up 397
Back-Up Camera 397
Bar, Stabilizer/Sway System 322
Battery 182, 506
  Charging System Light 182
  Keyless Key Fob Replacement 21
Battery Saver Feature 73
Belts, Seat 287
Blind Spot Monitoring 208
Body Builders Guide 15
Body Mechanism Lubrication 517
B-Pillar Location 537
Brake Assist System 197
Brake Control System 196
Brake Fluid 527, 574
Brake System 527, 565
  Fluid Check 527
  Master Cylinder 527
  Parking 298
  Warning Light 180
Brake/Transmission Interlock 301
Bulb Replacement 446
Bulbs, Light 289, 446

C

Cab Top Clearance Lights 455
Camera 397
Camera, Rear 397, 401
Camper 144
Capacities, Fluid 571
Caps, Filler
  Oil (Engine) 504, 508
  Radiator (Coolant Pressure) 525
Car Washes 558
Carbon Monoxide Warning 286, 570
Cargo Light 72
Cellular Phone 647

Center High Mounted Stop Light....453
Center Seat Storage Compartment....113
Changing A Flat Tire....469
Chart, Tire Sizing....533
Check Engine Light (Malfunction Indicator Light)....193
Checking Your Vehicle For Safety....286
Checks, Safety....286
Child Restraint....258
Child Restraints
  Booster Seats....262
  Child Seat Installation....275, 277
  How To Stow An unused ALR Seat Belt....273
  Infant And Child Restraints....260
  Locating The LATCH Anchorages....269
  Lower Anchors And Tethers For Children....264
  Older Children And Child Restraints....261
  Seating Positions....263
Clean Air Gasoline....568
Cleaning
  Wheels....551
Climate Control....79
  Automatic....83
  Manual....79
Cold Weather Operation....296
Compact Disc (CD) Maintenance....672
Compact Spare Tire....549
Contract, Service....675
Cooling Pressure Cap (Radiator Cap)....525
Cooling System....522
  Adding Coolant (Antifreeze)....524
  Coolant Level....522, 525
  Cooling Capacity....571
  Disposal Of Used Coolant....525
  Drain, Flush, And Refill....523
  Inspection....525
  Points To Remember....526
  Pressure Cap....525
  Radiator Cap....525
  Selection Of Coolant (Antifreeze)....523, 571, 572
Corrosion Protection....557
Cruise Control (Speed Control)....354, 357
Cruise Light....191, 192
Cupholders....122
Customer Assistance....673
Cybersecurity....576

D

Daytime Running Lights....68
Dealer Service....506
Defroster, Rear Window....79
Defroster, Windshield....79, 287
Delay (Intermittent) Wipers....77
Diagnostic System, Onboard....192

Differential, Limited Slip 337
Disabled Vehicle Towing....495
Disposal
Antifreeze (Engine Coolant)....525
Do Not Disturb....668
Door Ajar....183
Door Ajar Light 183
Door Locks
Automatic....39
Doors....33
Drag And Drop Menu 575
Driver's Seat Back Tilt 40
Driving
Off-Pavement....324
Off-Road 324
Through Flowing, Rising, Or Shallow Standing Water 437
Dual Rear Wheels 554, 565

E

Electric Brake Control System....196
Anti-Lock Brake System....195
Electronic Roll Mitigation 200, 204
Electrical Power Outlets....124
Electronic Range Select (ERS)....307
Electronic Stability Control (ESC) 200
Electronic Throttle Control Warning Light....182
Electronically Shifted Transfer Case 309
Emergency Braking....298
Emergency, In Case Of
Freeing Vehicle When Stuck....494
Hazard Warning Flasher....440
Jump Starting 488
Emission Control System Maintenance 193
Engine 504
Air Cleaner 509
Block Heater 297
Break-In Recommendations....297
Compartment Identification 504
Coolant (Antifreeze)....572
Exhaust Gas Caution....286, 570
Fails To Start....295
Flooded, Starting 295
Fuel Requirements 567, 571
Jump Starting 488
Oil 507, 571, 572
Oil Filler Cap....504, 508
Oil Filter 509
Oil Reset....167
Oil Selection 507, 571
Oil Synthetic....508
Overheating....493
Starting....292
Engine Oil Viscosity....508

Enhanced Accident Response Feature 255, 498
Entry System, Illuminated 76
Ethanol 568
Exhaust Gas Cautions 286, 570
Exhaust System 286, 520
Exterior Lighting 67
Exterior Lights 67, 289

F

Filters
  Air Cleaner 509
  Air Conditioning 93, 512
  Engine Oil 509, 572
  Engine Oil Disposal 508
Flashers
  Turn Signals 71, 191, 289
Flash-To-Pass 69
Flat Tire Changing 469, 531, 548
Flat Tire Stowage 483, 531, 548
Fluid Capacities 571
Fluid Leaks 289
Fluid Level Checks
  Brake 527
Fluid, Brake 574
Fluids And Lubricants 572
Fog Lights 71, 451
Fold Flat Load Floor 119
Fold-Flat Seats 40
Forward Collision Warning 216
Four Wheel Drive 309
Four-Way Hazard Flasher 440
Freeing A Stuck Vehicle 494
Front Axle (Differential) 529
Fuel 567
  Adding 408
  Additives 568
  Clean Air 568
  Ethanol 568
  Filler Cap (Gas Cap) 410
  Gasoline 567
  Light 186
  Materials Added 568
  Methanol 568
  Octane Rating 567, 572
  Requirements 567, 571
  Tank Capacity 571
Fuses 457

G

Garage Door Opener (HomeLink) 104
Gas Cap (Fuel Filler Cap) 410
Gasoline, Clean Air 568
Gasoline, Reformulated 568
General Information 230

Glass Cleaning....563
Gross Axle Weight Rating....412
Gross Vehicle Weight Rating....412
Guide
Body Builders....15
GVWR....410

H

Hazard
Driving Through Flowing, Rising, Or Shallow Standing Water....437
Hazard Warning Flashers....440
Head Restraints....51
Head Rests....51
Headlights....447
Automatic High Beam....68
Cleaning....558
High Beam....68
Lights On Reminder....70
Passing....69
Switch....67
Heated Mirrors....63
Heater, Engine Block....297
Hill Descent Control....206
Hill Descent Control Indicator....206
Hill Start Assist....198
Hitches
Trailer Towing....417
Hoisting....531
HomeLink (Garage Door Opener)....104
Hood Prop....101
Hood Release....101
Hub Caps....487

I

Ignition....25
Switch....25
Illuminated Entry....76
In Vehicle Help
Vehicle User Guide....16
Inside Rearview Mirror....57, 58, 59, 441
Instrument Cluster
Descriptions....191
Display....165
Engine Oil Reset....167
Instrument Panel Lens Cleaning....562
Integrated Trailer Brake Control....421
Interior Appearance Care....561
Interior Lights....73
Intermittent Wipers (Delay Wipers)....77
Introduction....13
Inverter Outlet (115V)....126
iPod/USB/MP3 Control....643

J

Jack Location....469
Jump Starting....488

K

Key Fob
  Panic Alarm....19
  Programming Additional Key Fobs....24, 30
Key Fob Battery Service (Remote Keyless Entry)....21
Key Fob Programming (Remote Keyless Entry)....24
Keyless Enter-N-Go....36, 291
  Lock The Vehicle's Doors....585, 610, 631
  Passive Entry....36
  Passive Entry Programming....610, 631
Keys....18
  Replacement....31

L

Lane Change And Turn Signals....71
Lane Change Assist....71
Latches....289
  Hood....101
Lead Free Gasoline....567
Leaks, Fluid....289
Life Of Tires....545
Light Bulbs....289, 446
Lights....289
  Air Bag....180, 245, 287
Automatic High Beam....68
Brake Assist Warning....204
Brake Warning....180
Bulb Replacement....446
Cab Top Clearance....455
Cargo....72
Center Mounted Stop....453
Courtesy/Reading....74
Cruise....191, 192
Daytime Running....68
Electronic Stability Program(ESP) Indicator....181
Engine Temperature Warning....181
Exterior....67, 289
Fog....451
Four Wheel Drive Indicator....317
Hazard Warning Flasher....440
Headlights....67, 69
High Beam....68
Hill Descent Control Indicator....206
Illuminated Entry....76
Interior....73, 74
Lights On Reminder....70
Low Fuel....186
Malfunction Indicator (Check Engine)....184
Park....191
Passing....69

Seat Belt Reminder 179
Security Alarm 181
Service 446
Side Marker 457
Traction Control 204
Transfer Case 317
Turn Signals 71, 191, 289, 447, 452
Warning Instrument Cluster Descriptions 181, 191
Limited-Slip Differential 337, 530
Load Shed Battery Saver Mode 177
Load Shed Battery Saver On 177
Load Shed Electrical Load Reduction 177
Load Shed Intelligent Battery Sensor 177
Loading Vehicle 410
Tires 537
Locks
Automatic Door 39
Child Protection 39
Power Door 35
Low Tire Pressure System 220
Lubrication, Body 517
Lug Nuts/Bolts 565

M

Maintenance 100
Maintenance Free Battery 506
Maintenance Schedule 499
Malfunction Indicator Light (Check Engine) 184
Manual
Park Release 492
Service 677
Media Hub 643
Memory Seat 45
Methanol 568
Mirrors 57
Electric Powered 60
Heated 63
Memory 45
Outside 59
Rearview 57, 58, 59, 441
Trailer Towing 62
Modifications/Alterations
Vehicle 15
Monitor, Tire Pressure System 220
Mopar Parts 676
MP3 Control 643
Multi-Function Control Lever 67

N

Navigation System (Uconnect GPS) 397
New Vehicle Break-In Period 297

O

Occupant Restraints 230
Octane Rating, Gasoline (Fuel) 567

Off-Pavement Driving (Off-Road).....324, 438
Off-Road Driving (Off-Pavement).....324, 438
Oil Filter, Change.....509
Oil Filter, Selection.....509
Oil Pressure Light.....182
Oil Reset.....167
Oil, Engine.....507, 572
  Capacity.....571
  Change Interval.....507
  Dipstick.....505
  Disposal.....508
  Filter.....509, 572
  Filter Disposal.....508
  Identification Logo.....507
  Materials Added To.....508
  Pressure Warning Light.....182
  Recommendation.....507, 571
  Synthetic.....508
  Viscosity.....508, 571
Onboard Diagnostic System.....192
Operating Precautions.....192
Operator Manual
  Owner's Manual.....14, 677
Outside Rearview Mirrors.....59
Overheating, Engine.....493

P

Paint Care.....557
Panic Alarm.....19
Parking Brake.....298
ParkSense System, Rear.....379, 387
Passive Entry.....36
Pedals, Adjustable.....56
Personalized Main Menu.....575
Pets.....286
Pickup Box.....130, 134
Pinch Protection.....99
Placard, Tire And Loading Information.....537
Power
  Distribution Center (Fuses).....458
  Door Locks.....35
  Mirrors.....60
  Outlet (Auxiliary Electrical Outlet).....124, 126
  Seats.....43
  Side Steps.....35
  Sliding Rear Window.....96
  Steering.....60
  Sunroof.....97
  Windows.....94
Power Seats
  Down.....44
  Forward.....44

Rearward 44
Recline 44
Tilt 44
Up 44
Power Steering Fluid 574
Pregnant Women And Seat Belts 242
Pretensioners
Seat Belts 242

R

Radial Ply Tires 543
Radiator Cap (Coolant Pressure Cap) 522, 525
Radio Frequency
General Information 24, 29, 31, 38
Radio Operation 647
Rain Sensitive Wiper System 78
Ramp Travel Index 324
Rear Axle (Differential) 529
Rear Camera 401
Rear Cargo Area Utility Rails 142
Rear Cross Path 213
Rear ParkSense System 379, 387
Rear Window, Sliding 97
Reclining Rear Seats 43
Recreational Towing 430
Shifting Into Transfer Case Neutral (N) 433
Shifting Out Of Transfer Case Neutral (N) 435
Reformulated Gasoline 568
Refrigerant 512
Release, Hood 101
Release, Tailgate 102
Reminder, Seat Belt 232
Remote Keyless Entry 19
Panic Alarm 19
Programming Additional Key Fobs 24, 30
Remote Starting
Exit Remote Start Mode 29
Uconnect Customer Programmable Features ... 588, 613, 633
Uconnect Settings 588, 613, 633
Replacement Bulbs 446
Replacement Keys 31
Replacement Tires 546
Reporting Safety Defects 676
Restraints, Child 258
Restraints, Head 51
Rotation, Tires 553

S

Safety Checks Inside Vehicle 287
Safety Checks Outside Vehicle 289
Safety Defects, Reporting 676
Safety Information, Tire 531
Safety Tips 286
Safety, Exhaust Gas 286

Schedule, Maintenance 499
Seat Belt Reminder....179
Seat Belts 231, 287
Adjustable Shoulder Belt 237
Adjustable Upper Shoulder Anchorage 237
Adjustable Upper Shoulder Belt Anchorage....237
Automatic Locking Retractor (ALR) 243
Child Restraints....258
Energy Management Feature 242
Extender....241
Front Seat....231, 235
Inspection 287
Lap/Shoulder Belt Operation 235
Lap/Shoulder Belt Untwisting 237
Operating Instructions 235
Pregnant Women....242
Pretensioners....242
Reminder 232
Seat Belt Extender 241
Seat Belt Pretensioner 242
Seat Belt Reminder....232
Untwisting Procedure 237
Seat Belts Maintenance....562
Seats 40, 42, 44
Adjustment....40, 44
Easy Entry 48
Folding Floor....119
Head Restraints 51
Memory....45
Power 43
Rear Folding....40
Reclining Rear....43
Tilting....40
Security Alarm....32, 181
Selection Of Coolant (Antifreeze)....572
Sentry Key
Key Programming 30
Sentry Key (Immobilizer)....30
Sentry Key Replacement 31
Service Assistance 673
Service Contract....675
Service Manuals 677
Shifting....299
Automatic Transmission 301
Transfer Case 316
Transfer Case, Shifting Into Transfer Case
Neutral (N)....433
Transfer Case, Shifting Out Of Transfer Case
Neutral (N)....435
Side Steps, Power 35
Signals, Turn 71, 191, 289
Siri....666

Sliding Rear Window, Power....96
Snow Chains (Tire Chains)....552
Snow Plow....427
Snow Tires....548
Spare Tire Changing....469
Spare Tire Stowage....483
Spare Tires....548, 549, 550
Spark Plugs....572
Speed Control
  Accel/Decel....356
  Cancel....357
  Resume....357
Speed Control (Cruise Control)....354, 357
Stabilizer/Sway Bar System....322
Starting....290, 292
  Automatic Transmission....291
  Button....25
  Cold Weather....296
  Engine Fails To Start....295
Starting And Operating....292
Starting Procedures....292
Starting Procedures (Gas Engines)....290
Steering
  Tilt Column....54
  Wheel, Heated....54, 55
  Wheel, Tilt....54
Steering Wheel Audio Controls....642
Steering Wheel Mounted Sound System Controls....642
Steps, Power Side....35
Storage....111
Storage Compartment, Center Seat....113
Storage, Vehicle....92, 557
Storing Your Vehicle....557
Sun Roof....97, 100
Sunglasses Storage....130
Sunshade Operation....99
Sway Control, Trailer....205
Synthetic Engine Oil....508

T

Tailgate....144
Tailgate, Electronic Lowering....102
Telescoping Steering Column....54
Temperature Control, Automatic (ATC)....91
Tilt
  Down....44
  Up....44
Tilt Steering Column....54
Tip Start....291
Tire And Loading Information Placard....537
Tire Changing....469
Tire Markings....531
Tire Safety Information....531

Tire Stowage 483
Tires....289, 541, 548, 555
Aging (Life Of Tires)....545
Air Pressure 541
Chains 552
Compact Spare....549
Dual....554, 565
General Information 541, 548
High Speed....543
Inflation Pressure 542
Life Of Tires 545
Load Capacity....537, 538
Pressure Monitoring System (TPMS)....186, 220
Quality Grading 555
Radial 543
Replacement....546
Rotation 553
Safety....531, 541
Sizes....533
Snow Tires....548
Spare Tires....548, 550
Spinning....544
Trailer Towing 420
Tread Wear Indicators....545
Wheel Nut Torque 565
To Open Hood....101
Tongue Weight/Trailer Weight....418
Tonneau Cover 147, 558
Tonneau Cover Cleaning 558
Towing....411, 495
Disabled Vehicle....495
Guide....418
Recreational....430
Weight....418
Towing Behind A Motorhome 430
Traction....436
Traction Control 200
Traction Control Switch 200
Trailer Sway Control (TSC) 205
Trailer Towing 411
Cooling System Tips 426
Hitches 417
Minimum Requirements 418
Mirrors 62
Tips 426
Trailer And Tongue Weight....418
Wiring 424
Trailer Towing Guide 418
Trailer Weight....418
Transfer Case 530
Electronically Shifted 309
Fluid 574

Transmission....301
Automatic....301, 528
Fluid....574
Maintenance....528
Shifting....299
Transporting Pets....286
Tread Wear Indicators....545
Turn Signals....71, 191, 447, 452

U

Uconnect
Uconnect Settings....578, 585, 588, 610, 613, 631, 633
Uconnect Settings
Customer Programmable
Features....36, 585, 588, 610, 613, 631, 633
Passive Entry Programming....36, 585, 610, 631
Uconnect Voice Command....649
Uniform Tire Quality Grades....555
Universal Garage Door Opener (HomeLink)....104
Universal Transmitter....104
Unleaded Gasoline....567
Untwisting Procedure, Seat Belt....237
USB....643
Utility Rails, Rear Cargo Area....142

V

Vehicle Identification Number (VIN)....564
Vehicle Loading....410, 538
Vehicle Modifications/Alterations....15
Vehicle Storage....92, 557
Vehicle User Guide
In Vehicle Help....16
Navigation....16
Operating Instructions....16
Searching User Guide....16
Viscosity, Engine Oil....508
Voice Recognition System (VR)....649

W

Warning Lights (Instrument Cluster Descriptions) 185
Warnings And Cautions 15
Warranty Information 676
Washers, Windshield 77, 505
Washing Vehicle 558
Water
  Driving Through 437
Wheel And Wheel Tire Care 551
Wheel And Wheel Tire Trim 551
Wheel Covers 487
Winch 337
  Accessories 341
  Operation 341
  Rigging Techniques 352
  Usage 337
Wind Buffeting 97, 99
Window Fogging 92
Windows 94
  Power 94
  Rear Sliding 97
  Reset Auto-Up 95
Windshield Defroster 287
Windshield Washers 76, 77, 505
  Fluid 76, 505
Windshield Wiper Blades 517
Windshield Wipers 76
Wipers Blade Replacement 517
Wipers, Intermittent 77
Wipers, Rain Sensitive 78
Wireless Charging Pad 129

INSTALLATION OF RADIO TRANSMITTING EQUIPMENT

Special design considerations are incorporated into this vehicle's electronic system to provide immunity to radio frequency signals. Mobile two-way radios and telephone equipment must be installed properly by trained personnel. The following must be observed during installation.

The positive power connection should be made directly to the battery and fused as close to the battery as possible. The negative power connection should be made to body sheet metal adjacent to the negative battery connection. This connection should not be fused.

Antennas for two-way radios should be mounted on the roof or the rear area of the vehicle. Care should be used in mounting antennas with magnet bases. Magnets may affect the accuracy or operation of the compass on vehicles so equipped.

The antenna cable should be as short as practical and routed away from the vehicle wiring when possible. Use only fully shielded coaxial cable.

Carefully match the antenna and cable to the radio to ensure a low Standing Wave Ratio (SWR).

Mobile radio equipment with output power greater than normal may require special precautions.

All installations should be checked for possible interference between the communications equipment and the vehicle's electronic systems.

⚠ WARNING:

Operating, servicing and maintaining a passenger vehicle or off-road highway motor vehicle can expose you to chemicals including engine exhaust, carbon monoxide, phthalates, and lead, which are known to the State of California to cause cancer and birth defects or other reproductive harm. To minimize exposure, avoid breathing exhaust, do not idle the engine except as necessary, service your vehicle in a well-ventilated area and wear gloves or wash your hands frequently when servicing your vehicle. For more information go to www.P65Warnings.ca.gov/passenger-vehicle.

RAM

19D2DJ-126-AB
©2019 FCA US LLC. ALL RIGHTS RESERVED.
RAM IS A REGISTERED TRADEMARK OF FCA US LLC.

SECOND EDITION
PRINTED IN THE U.S.A.