SEAT IBIZA SC OWNER'S MANUAL

IBIZA
0307 SJE

Foreword

This Instruction manual and its corresponding supplements should be read carefully to familiarise yourself with your vehicle.

Besides the regular care and maintenance of the vehicle, its correct handling will contribute to preserve its value.

For safety reasons, note the information concerning accessories, modifications and parts change.

If selling the vehicle, give all of the onboard documentation to the new owner as this should be kept with the vehicle.

Contents

Manual structure 5

Content 6

Safety First 7

Safe driving 7
- Brief introduction 7
- Proper sitting position for occupants 9
- Pedal area 14
- Stowing luggage 15

Seat belts 16
- Brief Introduction 16
- Why wear seat belts? 18
- Seat belts 21
- Belt tension devices* 25

Airbag system 26
- Brief introduction 26
- Front airbags 29
- Side airbags 31
- Curtain airbags 35
- Deactivating airbags* 38

Child safety 40
- Brief introduction 40
- Child seats 42
- Securing child seats 45

Operating instructions 49

Cockpit 49
- Overview 49
- Instruments 51
- Digital display in the instrument panel 52
- Warning lamps 57

Steering column controls* 68
- General information 68
- Audio Control 68
- Audio + Telephone Control 70

Unlocking and locking 72
- Central locking 72
- Keys 76
- Radio frequency remote control 77
- Anti-theft alarm system* 78
- Tailgate 81
- Windows 83
- Panoramic tilting roof* 85

Lights and visibility 88
- Lights 88
- Interior lights 94
- Visibility 95
- Windscreen washers 96
- Rearview mirrors 99

Seats and stowage 102
- The importance of correct seat adjustment 102
- Head restraints 103
- Front seats 105
- Rear seat bench 107
- Stowage compartments 108
- Ashtrays, cigarette lighter and power point 111
- First-aid kit, warning triangle, fire extinguisher* 113
- Boot 114

Heating, Ventilation and Air conditioning 117
- Heating 117
- Air conditioning* 120
- Climatronic 123
- General notes 126

Driving 128
- Address 128
- Safety 129
- Ignition lock 130
- Starting and stopping the engine 131
- Manual gearbox 133
- Automatic gearbox* 134
- Handbrake 141
- Acoustic parking aid system* 143
- Cruise control system (CCS)* 144

Practical tips 149

Intelligent technology 149
- Brakes 149
- Anti-lock brake system and traction control ABS 150
- Electronic stabilisation programme (ESP)* 151

Driving and the environment 153
- Running-in 153
- Exhaust gasses purification system 154
- Driving abroad 155
- Trailer towing 160
- Economical and ecological driving 162

Your vehicle maintenance and cleaning 164
General notes 164
Vehicle exterior maintenance 165
Vehicle interior maintenance 171

Accessories, parts replacement and modifications 173
Accessories and spare parts 173
Technical modifications 173
Roof aerial* 174
Mobile telephones and two-way radios 174
Fitting a towing bracket* 176

Checking and refilling levels 178
Refuelling 178
Petrol 179
Diesel 180
Working in the engine compartment 181
Engine oil 184
Coolant 188
Washer fluid and windscreen wiper blades 190
Brake fluid 193
Battery 195
Wheels 197

If and when 203
Vehicle tools, spare wheel 203
Wheel change 204
Tyre repair kit (Tyre-Mobility-System)* 209
Fuses 211
Bulb change 218
Jump-starting 227
Towing and tow-starting 230

Technical Data 233

General notes on the technical data 233
Outstanding information 233
Data on fuel consumption 235
Towing a trailer 236
Wheels 236

Technical Data 238
Checking fluid levels 238
Petrol engine 1.2 51kW (70 CV) 239
Petrol engine 1.4 63 kW (85 bhp) 240
Petrol engine 1.6 77 kW (105 bhp) 241
Diesel engine 1.9l TDI 77 kW (105 bhp) 243
Dimensions and capacities 245

Index 247

Manual structure

What you should know before reading the on-board manual

This manual contains a description of the **equipment** supplied with the vehicle at the time of press. Some of the equipment hereunder described will not be available until a later date, or is only available in certain markets.

Due to the fact that this is a general manual for the IBIZA SC, some of the equipment and functions that are described in this manual are not included in all types or variants of the model; they may be different or be modified depending on the technical requirements and on the market; this should in no way be interpreted as misleading advertising.

The **illustrations** are intended as a general guide, and may vary from the equipment fitted in your vehicle in some details.

The **direction indications** (left, right, front, rear) appearing in this manual refer to the normal forward working direction of the vehicle except when otherwise indicated.

The **equipment marked with an asterisk*** is supplied as standard on certain versions of the model only, it can be supplied as an option on some models, or else it is only on sale in certain countries.

® All registered marks are indicated with ®. Although the copyright symbol does not appear, it is a copyrighted mark.

▶ The section is continued on the following page.

■ This shows the **end of the section**.

WARNING

Texts preceded by this symbol contain safety information. They warn you of serious dangers, possibly involving accident or injury.

Caution

Texts preceded by this symbol draw your attention to a possible risk of damage to your vehicle.

For the sake of the environment

Texts preceded by this symbol refer to relevant points concerning environmental protection.

Note

Texts preceded by this symbol contain additional information. ■

Content

This manual is structured to provide the information you need in an organised way. The content of this Manual is divided into **sections** which belong to **chapters** (e.g. “Air conditioning”). The entire manual is divided into five large parts which are:

1. Safety First

Information on the vehicle equipment relating to passive safety such as seat belts, airbags, seats, etc.

2. Controls and equipment

Information about the distribution of controls in the driver position of your vehicle, about the seat adjustment possibilities, about how to create a suitable climate in the passenger compartment, etc.

3. Practical tips

Advice relating to the driving, caring and maintenance of your vehicle and certain problems you can solve yourself.

4. Technical Data

Figures, values and the dimensions of your vehicle.

5. Alphabetic index

At the end of this manual there is a detailed alphabetical index, this will help you to rapidly find the information you require. ■

Safety First

Safe driving

Brief introduction

Dear SEAT Driver

Safety first!

This chapter contains important information, tips, suggestions and warnings that you should read and consider for both your own safety and for your passengers safety.

WARNING

- **This manual contains important information concerning the driver's and passengers' handling of the vehicle. The other booklets in the on board manual also contain further information that you should be aware of for your own safety and for the safety of your passengers.**
- **Ensure that the onboard documentation is kept in the vehicle at all times. This is especially important when lending or selling the vehicle to another person.** ■

Safety equipment

The safety equipment is a part of the occupant protection system and can reduce the risk of injury in the event of accident.

Never “put” your safety and the safety of your passengers in danger. In the event of an accident, the safety equipment may reduce the risk of injury. The following list includes most of the safety equipment in your SEAT:

- three-point seat belts,
- belt tension limiter for the front and rear side seats,
- belt tension devices for the front seats,
- front airbags,
- side airbags in the front seat backrests,
- curtain airbags,
- “ISOFIX” anchor points for “ISOFIX” rear child system,
- height-adjustable head restraints,
- rear-centre head restraints with in-use position and non-use position,
- adjustable steering column.

The safety equipment mentioned above works together to provide you and your passengers with the best possible protection in the event of accidents. But this safety equipment cannot neither help you nor your passengers if you or they are sitting in an incorrect position or do not properly adjust or use this equipment. ▶

Therefore, information is provided about why this equipment is so important, how it protects you, what you have to consider when using it and how you and your passengers can achieve the greatest possible benefit from the safety equipment fitted. This manual includes important warnings that you and your passengers should note in order to reduce the risk of injury.

Safety is everyone's business! ■

Before every trip

The driver bears the responsibility for his passengers and the operational worthiness of the vehicle.

For your own safety and the safety of your passengers, always note the following points before every trip:

- Ensure that the vehicle's lights and turn signals operate flawlessly.
- Check tyre pressure.
- Ensure that all windows provide a clear and good view of the surroundings.
- Secure all baggage ⇒ page 15.
- Make sure that no objects can interfere with the pedals.
- Adjust front seat, head restraint and mirrors properly acoording to your size.
- Ensure that the passenger in the central rear seat always has the head restraint in the correct position for use.
- Instruct passengers to adjust the head restraints according to their height.
- Protect children with appropriate child seats and properly applied seat belts ⇒ page 40.
- Assume the correct sitting position. Instruct your passengers also to assume a proper sitting position ⇒ page 9.
- Fasten your safety belt securely. Instruct your passengers also to fasten their seat belts properly ⇒ page 16. ■

What affects driving safety?

Driving safety is largely determined by your driving style and the personal behaviour of all occupants.

As a driver, you are responsible for yourself and your passengers. When your concentration or driving safety is affected by any circumstance, you endanger yourself as well as others on the road ⇒ ⚠, for this reason:

- Do not allow yourself to be distracted from the traffic around you, e.g. by passengers or telephone conversations.
- Never drive when your driving ability is impaired (e.g. by medication, alcohol, drugs).
- Observe traffic laws and speed limits.
- Always reduce your speed as appropriate for road, traffic and weather conditions. ▶

– When travelling long distances, take breaks regularly - at least every two hours.

– If possible, avoid driving when you are tired or are in tension.

WARNING

When driving safety is impaired during a trip, the risk of injury and accidents increases. ■

Proper sitting position for occupants

Proper sitting position for driver

The proper sitting position for the driver is important for a safe and relaxed driving.

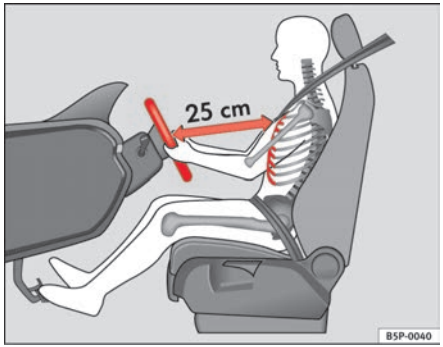

Fig. 1 The proper distance between driver and steering wheel

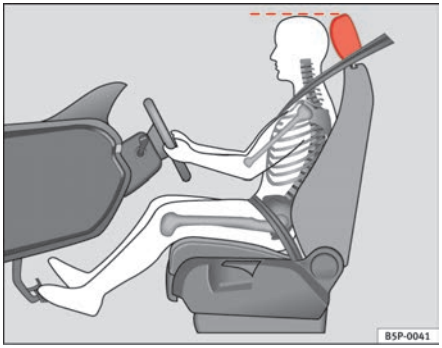

Fig. 2 Proper head restraint position for driver

For your own safety and to reduce the risk of injury in the event of an accident, we recommend the following adjustments for the driver:

– Adjust the steering wheel so that there is a distance of at least 25 cm between the steering wheel and the centre of your chest ⇒ fig. 1.

– Move the driver's seat forwards or backwards so that you are able to press the accelerator, brake and clutch pedals to the floor with your knees still slightly angled ⇒ ⚠.

– Ensure that you can reach the highest point of the steering wheel.

– Adjust the head restraint so that its upper edge is at the same level as the top of your head, or as close as possible to the same level as the top of your head ⇒ fig. 2.

– Move the backrest to an upright position so that your back rests completely against it.

– Fasten your safety belt securely ⇒ page 16.

– Keep both feet in the foot well so that you have the vehicle under control at all times.

Adjustment of the driver's seat ⇒ page 102.

WARNING

- **An incorrect sitting position of the driver can lead to severe injuries.**
- **Adjust the driver's seat so that there is at least 25 cm distance between the centre of the chest and the centre of the steering wheel ⇒ page 9, fig. 1. If distance is below 25 cm, the airbag system may not protect you properly.**
- **If your physical constitution prevents you from maintaining the minimum distance of 25 cm, contact a qualified workshop. The workshop will help you decide if special specific modifications are necessary.**
- **When driving, always hold the steering wheel with both hands on the outside of the ring at the 9 o'clock and 3 o'clock positions. This reduces the risk of injury when the driver airbag is triggered.**
- **Never hold the steering wheel at the 12 o'clock position, or in any other manner (e.g. in the centre of the steering wheel). In such cases, if the airbag is triggered, you may sustain injuries to the arms, hands and head.**
- **To reduce the risk of injury to the driver during sudden braking manoeuvres or an accident, never drive with the backrest tilted far back! The airbag system and seat belts can only provide optimal protection when the backrest is in an upright position and the driver is wearing his or her seat belt properly. The further the backrests are tilted to the rear, the greater the risk of injury due to incorrect positioning of the belt web or to the incorrect sitting position!**
- **Adjust the head restraint properly to achieve optimal protection.** ■

Proper sitting position for front passenger

The front passenger must sit at least 25 cm away from the dash panel so that the airbag can provide the greatest possible protection in the event that it is triggered.

For your own safety and to reduce the risk of injury in the event of an accident, we recommend the following adjustments for the front passenger:

– Move the front passenger seat back as far as possible ⇒ ⚠.

– Move the backrest to an upright position so that your back rests completely against it.

– Adjust the head restraint so that its upper edge is at the same level as the top of your head, or as close as possible to the same level as the top of your head ⇒ page 12.

– Keep both feet in the footwell in front of the front passenger seat.

– Fasten your safety belt securely ⇒ page 16.

The passenger airbag can be deactivated in **exceptional circumstances** ⇒ page 38.

For detailed information on how to adjust the front passenger's seat, see ⇒ page 105.

WARNING

- **An incorrect sitting position of the front passenger can lead to severe injuries.**

WARNING (continued)

- **Adjust the front passenger seat so that there is at least 25 cm between your breastbone and the dash panel. If you are sitting nearer than 25 cm, the airbag system cannot protect you properly.**
- **If your physical constitution prevents you from maintaining the minimum distance of 25 cm, contact a qualified workshop. The workshop will help you decide if special specific modifications are necessary.**
- **Always keep your feet in the footwell when the vehicle is moving; never rest them on the instrument panel, out the window or on the seat. An incorrect sitting position exposes you to an increased risk of injury in case of a sudden braking or an accident. If the airbag is triggered, you could sustain severe injuries due to an incorrect sitting position.**
- **To reduce the risk of injury to the front passenger in events such sudden braking manoeuvres or an accident, never travel with the backrest tilted far back! The airbag system and seat belts can only provide optimal protection when the backrest is in an upright position and the front passenger is wearing his or her seat belt properly. The further the backrests are tilted to the rear, the greater the risk of injury due to incorrect positioning of the belt web or to the incorrect sitting position!**
- **Adjust the head restraint properly in order to achieve maximum protection.** ■

Correct sitting position for passengers in the rear seats

Passengers in the rear seats must sit up straight, keep their feet on the footwells, have the rear central head restraint positioned for use and wear their seat belts properly.

To reduce the risk of injury in the event of a sudden braking manoeuvre or an accident, passengers on the rear bench seat must consider the following:

- Adjust the headrest to the correct position ⇒ page 12
- Keep both feet in the foot well in front of the rear seat.
- Fasten your safety belt securely ⇒ page 16.
- Use an appropriate child restraint system when you take children in the vehicle ⇒ page 40.

WARNING

- **If the passengers on the rear seat are not sitting properly, they could sustain severe injuries.**
- **Adjust the head restraint properly in order to achieve maximum protection.**
- **Seat belts can only provide optimal protection when backrests are in an upright position and the passengers are wearing their seat belts properly. If passengers on the rear seat are not sitting in an upright position, the risk of injury due to incorrect positioning of the belt web increases.** ■

Correct adjustment of head restraints

Properly adjusted head restraints are an important part of passengers protection and can reduce the risk of injuries in most accident situations.

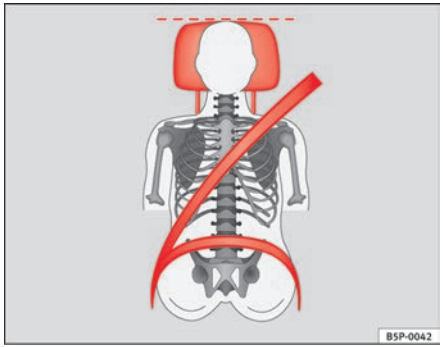

Fig. 3 Properly adjusted head restraint viewed from the front

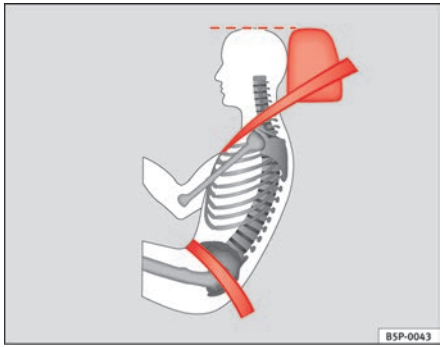

Fig. 4 Properly adjusted head restraint viewed from the side

Adjust the head restraint properly in order to achieve maximum protection.

– Adjust the head restraint so that its upper edge is at the same level as the top of your head, or as close as possible to the same level as the top of your head and, at the very least, at eye level ⇒ fig. 3 and ⇒ fig. 4.

Adjusting the head restraints ⇒ page 103

WARNING

- **Travelling with the head restraints removed or improperly adjusted increases the risk of severe injuries.**
- **Incorrectly adjusted head restraints could result in death in the event of a collision or accident.**
- **Incorrectly adjusted head restraints also increase the risk of injury during sudden or unexpected driving or braking manoeuvres.**
- **The head restraints must always be adjusted according to the passenger's height.** ■

Rear head restraints

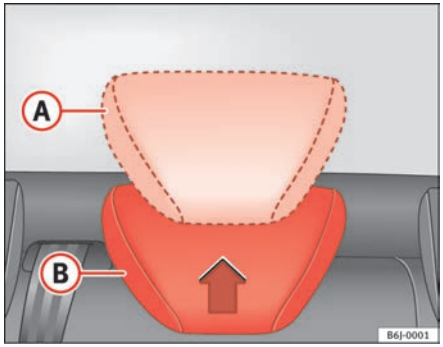

Fig. 5 Adjusting the rear head restraints

The rear head restraints have 2 positions:

- Raised position or position for use (A) ⇒ fig. 5. In this position, the head restraint is used normally, protecting the occupant of the rear seats, along with the rear seat belts.
- Rest position (B) ⇒ fig. 5. This position improves the driver's rear visibility.

To fit the head restraint in position for use (A), pull on the edges with both hands in the direction of the arrow. To place it in rest position (B), lower the head restraint.

WARNING

Whenever a passenger is seated on the rear central seat, the head restraint should be placed in the position for use (A).

Note

Note the instructions on the head restraints adjustment. ■

Examples of incorrect sitting positions

An incorrect sitting position can lead to severe injuries to occupants.

Seat belts can provide optimal protection only when the belt webs are properly positioned. Incorrect sitting positions substantially reduce the protective function of seat belts and increase the risk of injury due to incorrect belt web position. As the driver, you are responsible for all vehicle occupants, especially children.

– Never permit anyone to assume an incorrect sitting position in the vehicle while travelling ⇒ ⚠.

The following list contains examples of sitting positions that could be dangerous for all occupants. The list is not complete, but we would like to make you aware of this issue.

Therefore, whenever the vehicle is in motion:

- Never stand in the vehicle,
- never stand on the seats,
- never kneel on the seats,
- never tilt your backrest far to the rear,
- never lean against the dash panel,
- never lie on the rear bench,
- never sit on the front edge of a seat,
- never sit sideways,

- never lean out of a window,
- never put your feet out of a window,
- never put your feet on the dash panel,
- never put your feet on the surface of a seat,
- never travel in a foot well ,
- never travel on a seat without wearing the seat belt,
- never carry any person in the luggage compartment.

WARNING

- **Every incorrect sitting position increases the risk of severe injuries.**
- **Sitting in an incorrect position exposes the occupants to severe injuries if airbags trigger, by striking a passenger who has assumed an incorrect sitting position.**
- **Before the vehicle moves, assume the proper sitting position and maintain it throughout the trip. Before every trip, instruct your passengers to assume the proper sitting position and to maintain it during the trip** **⇒ page 9, “Proper sitting position for occupants”.** ■

Pedal area

Pedals

The operation of all pedals must never be impaired by objects or floor mats.

– Ensure that you can always press the accelerator, brake and clutch pedals unimpaired to the floor.

– Ensure that the pedals can return unimpaired to their initial positions.

Use only floor mats which leave the pedal area free and can be securely fastened on the foot well.

If a brake circuit fails, the brake pedal must be pressed down thoroughly in order to stop the vehicle.

Wear suitable shoes

Always wear shoes which support your feet properly and give you a good feeling for the pedals.

WARNING

- **Restricting pedal operation can lead to critical situations while driving.**
- **Never place objects on the driver footwell. An object could move into the pedal area and impair pedal operation. In the event of a sudden driving or braking manoeuvre, you will not be able to operate the brake, clutch or accelerator pedal. Risk of accident!** ■

Floor mats on the driver side

Only floor mats may be used which can be securely fastened in the foot well and do not impair operation of the pedals.

– Ensure that the floor mats are securely fastened during the trip and do not obstruct the pedals ⇒ ⚠.

Only use floor mats which leave the pedals clear and which are secured to prevent them from slipping. You can obtain suitable floor mats from a qualified dealership. ▶

WARNING

- **If the pedals are obstructed, an accident may occur. Risk of serious injuries.**
- **Ensure that the floor mats are always securely attached.**
- **Never lay or fit floor mats or other floor coverings over the original floor mats. This would reduce the pedal area and could obstruct the pedals. Risk of accident.** ■

Stowing luggage

Loading the boot

All luggage and other loose objects must be safely secured in the luggage compartment.

Unsecured objects which shift back and forth could affect safety or driving characteristics of the vehicle by shifting the centre of gravity.

– Distribute the load evenly in the luggage compartment.

– Lay and stow heavy luggage as far forward as possible in the luggage compartment.

– Stow heavy luggage as low as possible in the luggage compartment.

WARNING

- **Loose luggage and other objects in the boot could cause serious injuries.**

WARNING (continued)

- **Always put objects in the luggage compartment.**
- **During sudden manoeuvres or accidents, loose objects can be thrown forward, injuring vehicle occupants or even third parties. This increased risk of injury will be further increased if a loose object is struck by an inflating airbag. If this happens, objects can be transformed into "missiles". Risk of fatal injury.**
- **Please note that the centre of gravity may shift when transporting heavy objects; this may affect the vehicle's handling and lead to an accident. Therefore, it is essential to adjust your speed and driving style accordingly, to avoid accidents.**
- **Never exceed the allowed axle loads or allowed maximum weight. If the allowed axle load or the allowed total weight is exceeded, the driving characteristics of the vehicle may change, leading to accidents, injuries and damage to the vehicle.**
- **Never leave your vehicle unattended, especially when the tailgate is open. Children could climb into the luggage compartment closing the door behind them; they will remain trapped without help and there is a mortal risk.**
- **Never allow children to play in or around the vehicle. Close and lock both the tailgate and all the doors when you leave the vehicle. Before you lock the vehicle, make sure that there are no adults or children in the vehicle.**
- **Never transport passengers in the luggage compartment. Every passenger must be properly belted in** **⇒ page 16.**

Note

- Air circulation in the vehicle helps reduce fogging of the windows. Used air escapes through ventilation slits in the side trim of the luggage compartment. Ensure that the ventilation slits are never covered. ■

Seat belts

Brief Introduction

Before driving: remember your seat belt!

Wearing a seat belt properly can save your life!

In this chapter you will learn the importance of wearing seat belts, how they work and how to properly fasten, adjust and wear them.

– Read and consider all the information as well as the warnings in this chapter.

WARNING

- **Before inserting the central rear seat belt into its catch, make sure that the backrest is properly engaged in position by pulling on the belt.**
- **If seat belts are worn incorrectly or not at all, the risk of severe injuries increases.**
- **Properly worn seat belts can reduce severe injuries in case of sudden braking manoeuvres or accidents. For security reasons, you and your passengers must always wear the seat belts properly as long as the vehicle is in motion.**
- **Pregnant women or people with physical disabilities must also use seat belts. Like all other passengers, these people can also sustain severe injuries if they are not wearing their seat belts properly.** ■

Number of seats

Your vehicle has **five** seats, two on the front part and three on the rear part. Each seat is equipped with a three-point seat belt.

WARNING

- **More people than available seats must never be transported in your vehicle.**
- **Every passenger in the vehicle must properly fasten and wear the seat belt belonging to his or her seat. Children must be protected with an appropriate child restraint system.** ■

Seat belt warning lamp*

The warning lamp acts as a reminder to the driver to fasten the seat belt.

Before starting the vehicle:

– Fasten your safety belt securely.

– Instruct your passengers to fasten their seat belts properly before driving off.

– Protect children by using a child seat according to the child's height and weight. ▶

The warning lamp in the instrument panel lights up[1] if the driver or passenger seat belt is not fastened [1] when the ignition is switched on. In addition, an acoustic signal can also be heard for a couple of seconds[1].

The warning lamp* is switched off if the driver seat belt is fastened while the ignition is switched on. ■

[1] Depending on the model version

Why wear seat belts?

Physical principles of frontal collisions

In the event of a frontal collision, a large amount of kinetic energy must be absorbed.

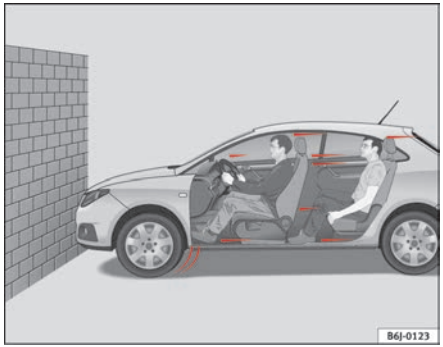

Fig. 6 Vehicle about to hit a wall: the occupants are not wearing seat belts

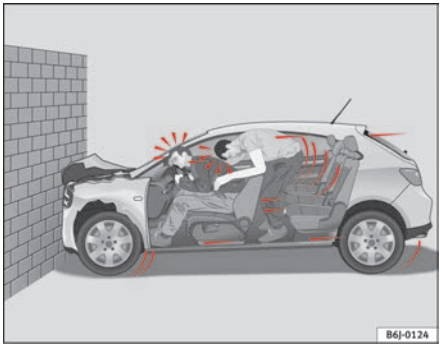

Fig. 7 The vehicle hits the wall: the occupants are not wearing seat belts

It is easy to explain how the laws of physics work in the case of a head-on collision: When a vehicle starts moving ⇒ fig. 6 there is a certain amount of energy known as “kinetic energy”, both in the vehicle and in the occupants.

The amount of “kinetic energy” depends on the speed of the vehicle and the weight of the vehicle and its passengers. The higher the speed and the greater the weight, the more energy there is to be “released” in an accident.

The most significant factor, however, is the speed of the vehicle. If the speed doubles from 25 km/h to 50 km/h, for example, the kinetic energy is multiplied by four.

Given that the passengers in our example are not restrained by seat belts, the entire amount of kinetic energy has to be absorbed at the point of impact ⇒ fig. 7.

Even at speeds of 30 km/h to 50 km/h, the forces acting on bodies in a collision can easily exceed one tonne (1000 kg). At greater speed these forces are even higher.

Passengers not wearing seat belts are not “attached” to the vehicle. In a frontal collision, they will move forward at the same speed their vehicle was ▶

travelling just before the impact. This example applies not only to frontal accidents, but to all accidents and collisions. ■

The danger of not using the seat belt

The general belief that the passengers can protect themselves with their hands in a minor collision is false.

Fig. 8 A driver not wearing a seat belt is thrown forward violently.

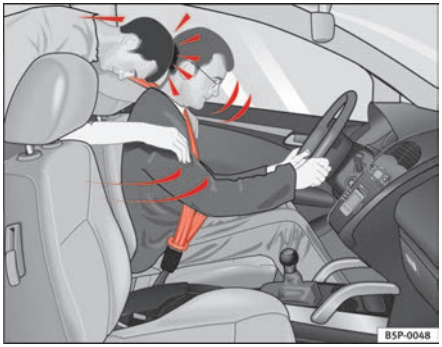

Fig. 9 The unbelted rear passenger is thrown forward violently, hitting the driver wearing a seat belt.

Even at low speeds the forces acting on the body in a collision are so great that it is not possible to brace oneself with one's hands. In a frontal collision, unbelted passengers are thrown forward and will make violent contact with the steering wheel, dashboard, windscreen or whatever else is in the way ⇒ fig. 8.

The airbag system is not a substitute for the seat belts. When triggered, airbags provide only additional protection. All passengers (including the driver) must wear seat belts properly during the trip. This will reduce the risk of severe injuries in the event of an accident – regardless of whether an airbag is fitted for the seat.

Note that airbags can be triggered only once. To achieve the best possible protection, the seat belt must always be worn properly so that you will be protected in accidents in which no airbag is deployed.

It is also important for the rear passengers to wear seat belts properly, as they could otherwise be thrown forward violently in an accident. Rear passengers who do not use seat belts endanger not only themselves but also the front occupants ⇒ fig. 9. ■

Seat belts protection

Passengers not wearing seat belts risk severe injuries in the event of an accident.

Fig. 10 Driver wearing the seat belt properly: is secured by the belt in sharp braking

Properly worn seat belts hold the vehicle occupants in the correct sitting positions and substantially reduce the kinetic energy in the event of an accident. Seat belts also help to prevent uncontrolled movements that could lead to severe injuries. In addition, properly worn seat belts reduce the danger of being thrown from the car.

Passengers wearing their seat belts correctly benefit greatly from the ability of the belts to absorb kinetic energy. The front part of your vehicle and other passive safety features (such as the airbag system) are also designed to absorb the kinetic energy released in a collision. Taken together, all these features reduce the releasing kinetic energy and consequently, the risk of injury.

Our examples describe frontal collisions. Of course, properly worn seat belts reduce substantially the risk of injury in all other types of accidents. This is why it is so important to fasten seat belts before every trip, even when "just driving around the corner".

Ensure that your passengers wear their seat belts as well. Accident statistics have shown properly that wearing seat belts is an effective mean of substantially reducing the risk of injury and improving the chances of survival in a serious accident. Furthermore, properly worn seat belts improve the protection provided by airbags in the event of an accident. For this reason, wearing a seat belt is required by law in most countries.

Although your vehicle is equipped with airbags, the seat belts must be fastened and worn. The front airbags, for example, are only triggered in some frontal accidents. The front airbags will not be triggered during minor frontal collisions, minor side collisions, rear collisions, rolls or accidents in which the airbag trigger threshold value in the control unit is not exceeded.

Therefore, you should always wear your seat belt and ensure that your passengers have fastened their seat belts properly before you drive off! ■

Safety instructions on using seat belts

If seat belts are used correctly, they can reduce the risk of injury in an accident.

– Always wear the seat belt as described in this booklet.

– Ensure that the seat belts can be fastened at all times and are not damaged.

WARNING

- **If the seat belts are worn incorrectly or not at all, the risk of severe injuries increases. The optimal protection from seat belts can be achieved only if you use them properly.**

⚠ WARNING (continued)

- Fasten your seat belt before every trip - even when driving in town. That applies also to your front and rear passengers – danger of injury!
- The seat belt cannot offer its full protection if the belt web is not positioned correctly.
- Never allow two passengers (even children) to share the same seat belt.
- Keep both feet in the foot-well in front of your seat as long as the vehicle is in motion.
- Never unbuckle a seat belt while the vehicle is in motion. Risk of fatal injury.
- The belt webbing must never be twisted while it is being worn.
- The belt webbing should never lie on hard or fragile objects (such as glasses or pens, etc.) because this can cause injuries.
- Do not allow the seat belt to be damaged or jammed, or to rub on any sharp edges.
- Never wear the seat belt under the arm or in any other incorrect position.
- Loose, bulky clothing (such as an overcoat over a jacket) impairs the proper fit and function of the belts, reducing their capacity to protect.
- The slot in the seat belt buckle must not be blocked with paper or other objects, as this can prevent the latch plate from engaging securely.
- Never use seat belt clips, retaining rings or similar instruments to alter the position of the belt webbing.
- Frayed or torn seat belts or damage to the connections, belt retractors or parts of the buckle could cause severe injuries in the event of an accident. Therefore, you must check the condition of all seat belts at regular intervals.
- Seat belts which have been worn in an accident and stretched must be replaced by a qualified workshop. Renewal may be necessary even if there is no apparent damage. The belt anchorage should also be checked.

⚠ WARNING (continued)

- Do not attempt to repair a damaged seat belt yourself. The seat belts must not be removed or modified in any way.
- The belts must be kept clean, otherwise the retractors may not work properly. ■

Seat belts

Seat belt adjustment

The seat belts for the front and rear occupants are locked into position by a latch.

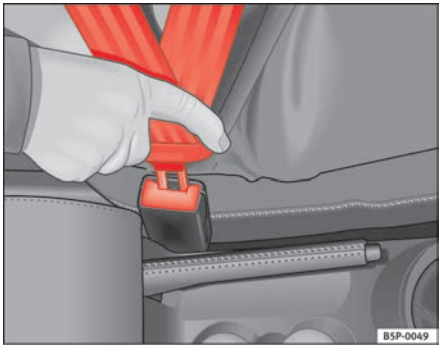

Fig. 11 Belt buckle and latch plate of seat belt

The seat belt cannot offer its full protection if the belt web is not positioned correctly.

– Adjust the seat and head restraint correctly.

– To fasten the belt, take hold of the latch plate and pull it slowly across your chest and lap.

– Insert the latch plate into the buckle for the appropriate seat and push it down until it is securely locked with an audible click ⇒ page 21, fig. 11.

– Pull the belt to ensure that the latch plate is securely engaged in the buckle.

The seat belts are equipped with an automatic retractor on the shoulder strap. Full freedom of movement is permitted when the shoulder belt is pulled slowly. However, during sudden braking, during travel in mountains or bends and during acceleration, the automatic retractor on the shoulder belt is locked.

The automatic belt retractors on the front seats are fitted with belt tension devices ⇒ page 25.

WARNING

- **An incorrectly worn seat belt web can cause severe injuries in the event of an accident.**
- **The seat belts offer best protection only when the backrests are in an upright position and the seat belts have been fastened properly.**
- **Never put the latch plate in the buckle of another seat. If you do this, the seat belt will not protect you properly and the risk of injury is increased.**
- **If an occupant is incorrectly belted in, the belt cannot protect him or her properly. An incorrectly positioned belt web can cause extremely severe injuries.** ■

Seat belt position

Seat belts offer their maximum protection only when they are properly positioned.

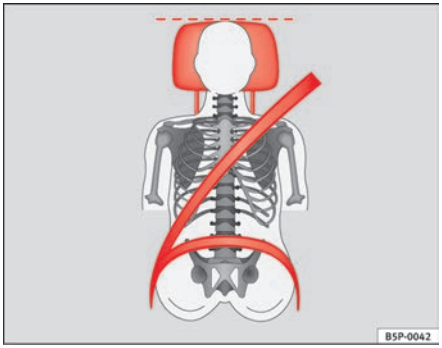

Fig. 12 Correct belt web and head restraint positions, viewed from front

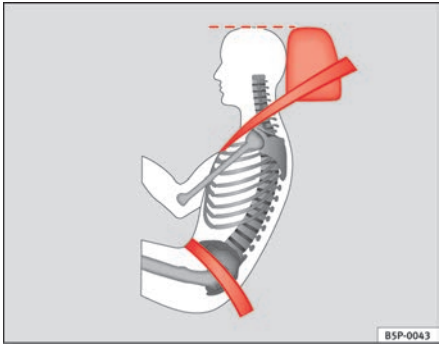

Fig. 13 Correct belt web and head restraint positions, viewed from side

WARNING

- **An incorrectly worn seat belt web can cause severe injuries in the event of an accident.**
- **The shoulder belt must be positioned around the middle of the shoulder. The seat belt must lie flat and snugly on the torso ⇒ page 22, fig. 12.**
- **The lap part of the seat belt must lie across the pelvis, never across the stomach. The seat belt must lie flat and snugly on the pelvis ⇒ page 22, fig. 13. Pull the belt tight if necessary to take up any slack.**
- **Read and observe the warnings ⇒ page 20.** ■

Pregnant women must also fasten their seat belts properly

The best protection for the unborn child is for the mother to wear the seat belt properly at all times during the pregnancy.

Fig. 14 Positioning seat belts during pregnancy

The seat belt provides maximum protection only when the belt web is properly positioned ⇒ page 22.

– Adjust the front seat and head restraint correctly.

– Holding the latch plate, pull the belt evenly across your chest and as low as possible over the pelvis ⇒ fig. 14.

– Insert the latch plate into the buckle for the corresponding seat and push it down until it is securely locked with an audible click ⇒ ⚠.

– Pull the belt to ensure that the latch plate is securely engaged in the buckle.

WARNING

- **An incorrectly worn seat belt web can cause severe injuries in the event of an accident.**
- **For pregnant women, the lap part of the seat belt must lie as low as possible over the pelvis, never across the stomach, and always lie flat so that no pressure is exerted on the abdomen.**
- **Read and observe the warnings ⇒ page 20.** ■

Seat belt release

The seat belt must not be unfastened until the vehicle has come to a standstill.

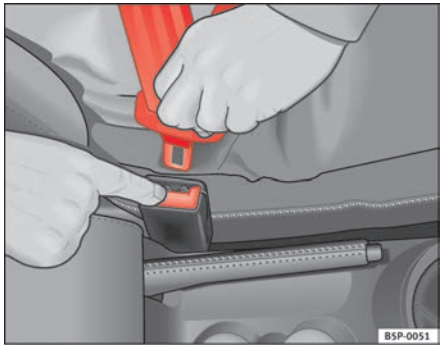

Fig. 15 Removing latch plate from buckle

– Press the red button on the belt buckle ⇒ fig. 15. The latch plate is released and springs out ⇒ ⚠.

– Guide the belt back by hand so that it rolls up easily and the trim is not damaged

⚠ WARNING

Never unbuckle a seat belt while the vehicle is in motion. If you do, you increase the risk of sustaining severe or fatal injuries. ■

Incorrectly fastened seat belts

Incorrectly worn seat belts can cause severe injuries.

Seat belts can provide optimal protection only if the belt web is properly worn. The seat belts must be fastened exactly in the order described in this chapter. An incorrect sitting position impairs substantially the protection a seat belt offers and can lead to severe or fatal injuries. The risk of severe or fatal injuries is especially increased when a deploying airbag strikes an occupant who has assumed an incorrect sitting position. As driver, you are responsible for all vehicle occupants, especially children. Therefore:

– Never permit anyone to assume an incorrect sitting position in the vehicle while travelling ⇒ ⚠.

⚠ WARNING

- **An incorrectly worn seat belt increases the risk of severe injuries.**
- **Before every trip, instruct your passengers to adjust their seat belts properly and to wear them during the trip.**
- **Read and always observe information and warnings concerning the use of seat belts ⇒ page 20.** ■

Belt tension devices*

Function of the belt tension device

During a frontal collision, the seat belts on the front seats are retracted automatically.

The seat belts for the front occupants are equipped with belt tension devices. Sensors will trigger the belt tension devices during severe head-on, lateral and rear collisions only if the seat belt is being worn. This retracts and tightens the seat belts, reducing the forward motion of the occupants.

The belt tension device can be triggered only once.

The belt tension devices will not be triggered in the event of light frontal and side collisions, if the vehicle overturns, or in situations where no large forces act on the front, side or rear of the vehicle.

Note

- If the belt tension devices are triggered, a fine dust is produced. This is normal and it is not an indication of fire in the vehicle.
- The relevant safety requirements must be observed when the vehicle or components of the system are scrapped. A qualified workshop is familiar with these regulations and will be pleased to pass on the information to you. ■

Service and disposal of belt tension devices

The belt tension devices are components of the seat belts that are installed in the seats of your vehicle. If you work on the belt tension devices or remove and install parts of the system when performing other repair work, the seat belt may be damaged. The consequence may be that, in the event of an accident, the belt tension devices function incorrectly or not at all.

So that the effectiveness of the belt tension device is not reduced and that removed parts do not cause any injuries or environmental pollution, regulations, which are known to the qualified workshops, must be observed.

WARNING

- **If repairs are not carried out by a professional, or if the belt tension devices are used incorrectly, the risk of severe or fatal injuries increases. The belt tension devices may fail to trigger or may trigger in the wrong circumstances.**
- **Never attempt to repair, adjust, remove or install parts of the belt tension devices or seat belts.**
- **The belt tension device and seat belt including its automatic retractor cannot be repaired.**
- **Any work on the belt tension devices and seat belts, including the removal and refitting of system parts in conjunction with other repair work, must be performed by a qualified workshop only.**
- **The belt tension devices will only provide protection for one accident and must be changed it they have been activated.** ■

Airbag system

Brief introduction

Why wear a seat belt and assume the correct sitting position?

For the inflating airbags to achieve the best protection, the seat belt must always be worn properly and the correct sitting position must be assumed.

For your own safety and the safety of the passengers, please ensure the following before driving:

- Always wear the seat belt properly
- Adjust the driver seat and the steering wheel correctly.
- Adjust the front passenger seat correctly.
- Adjust the head restraint correctly ⇒ page 12.
- Use an appropiate child restraint system to protect children in your vehicle.

The airbag is deployed at high speed in fractions of a second. If you have an incorrect seating position at the time the airbag is deployed, it could cause you critical injuries. Therefore, it is essential that all passengers in the vehicle assume a correct sitting position while travelling.

A sharp braking before an accident may cause a passenger not wearing a seat belt to be thrown forward into the area of the deploying airbag. In this case, the inflating airbag may inflict critical or fatal injuries on the occupant. This also applies to children.

Always maintain the greatest possible distance between yourself and the front airbag. This way, the front airbags can completely deploy when triggered, providing their maximum protection.

The most important factors that will trigger an airbag are: the type of accident, the angle of collision and the speed of the vehicle.

Whether the airbags are triggered depends primarily on the vehicle deceleration rate resulting from the collision and detected by the control unit. If the vehicle deceleration occurring during the collision and measured by the control unit remains below the specified reference values, the front, side and/or curtain airbag will not be triggered. Take into account that the visible damage in a vehicle involved in an accident, for whatever reason, are not an indication as to why the airbags had to be triggered.

WARNING

- **Wearing the seat belt incorrectly or assuming an incorrect sitting position can lead to critical or fatal injuries.**
- **All occupants, including children, who are not properly belted can sustain critical or fatal injuries if the airbag is triggered. You should always transport all children up to 12 years of age on the rear seat. Never transport children in the vehicle if they are not restrained or the restraint system is not appropriate for their age, size or weight.**
- **If you are not wearing a seat belt, if you lean forward or to the side while travelling or assume an incorrect sitting position, there is a substantially increased risk of injury. This increased risk of injury will be further increased if you are struck by an inflating airbag.**
- **To reduce the risk of injury from an inflating airbag, always wear the seat belt properly.**

WARNING (continued)

- **Always properly adjust the front seats.** ■

The danger of fitting a child seat on the front passenger seat

Rear-facing child seats must never be used on the front passenger seat when the front passenger airbag is enabled.

An enabled front airbag on the front passenger side is potentially a major danger to a child. The front passenger seat is life threatening to a child if he/she is transported in a rear-facing child seat. You should always transport all children up to 12 years of age on the rear seat.

If a rear-facing child seat is secured to the front passenger seat, an inflating airbag can strike it with such great force that critical or fatal injuries may result.

Therefore we strongly recommend you to transport children on the rear seats. That is the safest place for children in the vehicle. Alternatively, the front passenger airbag can be disabled with a key-operated switch ⇒ page 38. When transporting children, use a child seat appropriate to the age and size of each child.

For those vehicles that do not include a key lock switch to turn the airbag off, an Authorised Service Centre must be consulted.

WARNING

- **If a child seat is secured to the front passenger seat, the risk to the child of sustaining critical or fatal injuries in the event of an accident increases.**
- **Never secure a rear-facing child seat to the front passenger seat if the front passenger airbag is enabled. The child can suffer critical or fatal injuries when the front passenger airbag is triggered.**

WARNING (continued)

- **An inflating front passenger airbag can strike the rear-facing child seat and hurl it with great force against the door, the roof or the backrest.**
- **If, under special circumstances, it is necessary to transport a child in a rear-facing child seat on the front passenger seat, it is absolutely essential that you observe the following safety measures:**
  - **Disable the front passenger airbag ⇒ page 38, “Deactivating airbags*”.**
  - **The child seat must be approved by the child seat manufacturer for use on a front passenger seat with front or side airbag.**
  - **Follow the installation instructions of the child seat manufacturer and absolutely observe all warnings**
  - **Before properly installing the child seat, push the front passenger seat completely backwards so that the greatest possible distance to the front passenger airbag is ensured.**
  - **Ensure that no objects prevent the front passenger seat from being pushed completely back.**
  - **The backrest of the front passenger seat must be in an upright position.** ■

Warning lamp for airbag and belt tension device system

This warning lamp monitors the airbag and belt tension device system.

The warning lamp monitors all airbags and belt tension devices in the vehicle, including control units and wiring connections. ▶

Monitoring of airbag and belt tension device system

Both the airbag and belt tension device systems operation is constantly monitored electronically. The warning lamp will light up for a few seconds every time the ignition is switched on (self-diagnosis).

The system must be checked when the warning lamp :

- does not light up when the ignition is switched on,
- after the ignition is switched on, it turns off after 4 seconds,
- it turns off and then lights up again after the ignition is switched on,
- lights up or flashes while the car is moving.

In the event of a malfunction, the warning lamp remains on continuously. Have the airbag system inspected immediately by a qualified workshop.

If any of the airbags are de-activated by the Authorised Service Centre, the indicator lights for several seconds more after the verification and will turn off if there is no fault.

WARNING

- **If there is a malfunction, the airbag and belt tension device system cannot properly perform its protective function.**
- **If a malfunction occured, have the system checked immediately by a qualified workshop. Otherwise, in the event of an accident, the airbag system and belt tension devices may not be triggered, or may not be triggered correctly.** ■

Repairs, maintenance and disposal of the airbags

The parts of the airbag system are installed in various places in your vehicle. If you work on the airbag system or remove and install parts of the system when performing other repair work, parts of the airbag system may be damaged. The consequence may be that, in the event of an accident, the airbag inflates incorrectly or does not inflate at all.

The relevant safety requirements must be observed when the vehicle or components of the airbag are **scrapped**. The specialist workshops and the Vehicle disposal centres are familiar with these requirements.

WARNING

- **If repairs are not carried out by a professional, or if the airbags are used incorrectly, the risk of severe or fatal injuries is increased. The airbags may fail to inflate, or could inflate in the wrong circumstances.**
- **Do not cover or stick anything on the steering wheel hub or the soft plastic surface of the airbag unit on the passenger side of the dashboard, and do not obstruct or modify them in any way.**
- **It is important not to attach any objects such as cup holders or telephone mountings to the surfaces covering the airbag units.**
- **To clean the steering wheel or dash panel, you may use only a dry or a water-moistened cloth. Never clean the dash panel and the airbag module surface with cleansers containing solvents. Solvents cause the surface to become porous. If the airbag triggered, disintegrating plastic parts could cause substantial injuries.**
- **Never attempt to repair, adjust, remove or install parts of the airbag system.**
- **Any work on the airbag system or removal and installation of the airbag components for other repairs (such as repairs to the steering wheel) should be performed only by a qualified workshop. Qualified workshops have the necessary tools, repair information and qualified personnel.**
- **We strongly recommend you to go to a qualified workshop for all work on the airbag system.**
- **Never attempt to alter the front bumper or the body.**
- **The airbags provide protection for just one accident; replace them once they have deployed.** ■

Front airbags

Description of front airbags

The airbag system is not a substitute for the seat belts.

Fig. 16 Driver airbag located in steering wheel

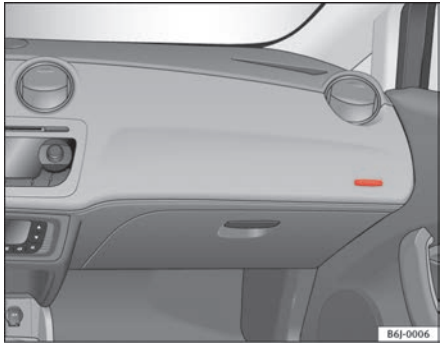

Fig. 17 Front passenger airbag located in dash panel

The front airbag for the driver is located in the steering wheel ⇒ fig. 16 and the airbag for the front passenger is located in the dash panel ⇒ fig. 17. Airbags are identified by the word “AIRBAG”.

In conjunction with the seat belts, the front airbag system gives the front occupants additional protection for the head and chest in the event of a severe frontal collision ⇒ page 31, “Safety notes on the frontal airbag system”.

In addition to their normal function of restraining the occupants, the seat belts also hold the driver and front passenger in a position where the airbags can provide maximum protection in a frontal collision.

The airbag system is not a substitute for seat belts, but it is an integral part of the vehicle's overall passive safety system. Please bear in mind that the airbag system can only work effectively when the occupants are wearing their seat belts correctly and have adjusted the head restraints properly. For this reason, it is very important to wear the seat belts at all times, not only because this is required by law in most countries, but also for your safety.

The main parts of the front airbag system are:

- an electronic control and monitoring system (control unit),
- the two front airbags (airbag with gas generator) for the driver and front passenger,
- a warning lamp in the dash panel insert ⇒ page 27.

The airbag system operation is monitored electronically. The airbag warning lamp will light up for a few seconds every time the ignition is switched on (self-diagnosis).

There is a fault in the system if the warning lamp :

- does not light up when the ignition is switched on ⇒ page 27
- after the ignition is switched on, it turns off after 4 seconds,
- it turns off and then lights up again after the ignition is switched on,
- lights up or flashes while the car is moving.

The front airbag system will not be triggered if:

- the ignition is switched off,
- there is a minor frontal collision,
- there is a side collision,
- there is a rear-end collision,
- the vehicle turns over.

WARNING

- **The seat belts and airbags can only provide maximum protection if the occupants are seated correctly ⇒ page 9, "Proper sitting position for occupants".**
- **If a fault has occured in the airbag system, have the system checked immediately by a qualified workshop. Otherwise, during a frontal collision the system may fail to trigger, or not trigger correctly.** ■

Operation of frontal airbags

Inflated airbags reduce the risk of head or chest injury.

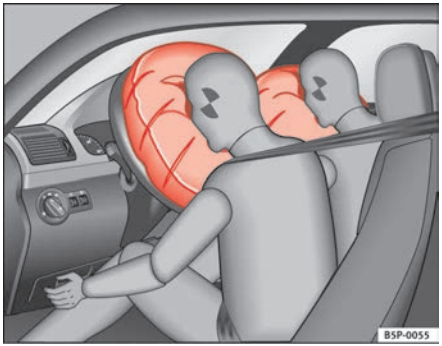

Fig. 18 Inflated front airbags

The airbag system is designed so that the airbags for the driver and front passenger are triggered in a severe frontal collision.

In certain types of accident the front, curtain and side airbags may be triggered together.

When the system is triggered, the airbags fill with a propellant gas and deploy in front of the driver and front passenger ⇒ fig. 18. The fully deployed airbags cushion the forward movement of the front occupants and help to reduce the risk of injury to the head and the upper part of the body.

The special design of the airbag allows the controlled escape of the propellant gas when an occupant puts pressure on the bag. Thus, the head and chest are surrounded and protected by the airbag. After the collision, the airbag deflates sufficiently for the front occupants to see forward.

In order to provide the desired extra protection in an accident, the airbags have to deploy extremely rapidly (within thousandth of a second). A fine dust ▶

may develop when the airbag deploys. This is normal and it is not an indication of fire in the vehicle. ■

Safety notes on the frontal airbag system

If you use airbags correctly, they can considerably reduce the risk of injury in many kinds of accident.

WARNING

- **It is important for the driver and front passenger to keep a distance of at least 25 cm from the steering wheel or dash panel. If the minimum distance is not observed, the airbags do not correctly protect the vehicle occupants; risk of fatal injuries! In addition, the front seats and head restraints must always be positioned correctly for the height of the occupant.**
- **If you are not wearing a seat belt, if you lean forward or to the side while travelling or assume an incorrect sitting position, there is a substantially increased risk of injury. This increased risk of injury will be further increased if you are struck by an inflating airbag.**
- **Never let a child travel on the front seat without an appropriate restraint system. If the airbag is triggered in an accident, children can sustain serious or fatal injuries ⇒ page 40, "Child safety".**
- **The deployment space between the front passengers and the airbags must not in any case be occupied by other passenger, pets and objects.**
- **The airbags provide protection for just one accident; replace them once they have deployed.**
- **It is also important not to attach any objects such as cup holders or telephone mountings to the surfaces covering the airbag units.**
- **Do not attempt to modify components of the airbag system in any way.** ■

Side airbags

Description of side airbags

The airbag system is not a substitute for the seat belts.

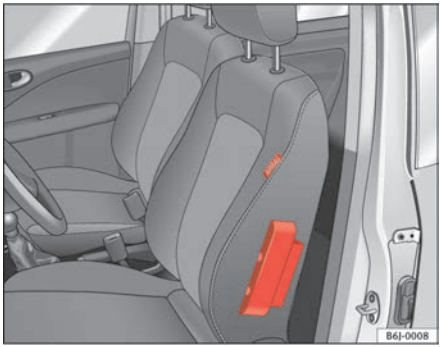

Fig. 19 Side airbag in driver seat

The side airbags are located in the driver seat and front passenger seat backrests ⇒ fig. 19. The locations are identified by the text "AIRBAG" in the upper region of the backrests.

Together with the seat belts, the side airbag system gives the front seat occupants additional protection for the upper body in the event of a severe side collision ⇒ page 34, "Safety notes on the operation of the side airbag system".

In a side collision, the side airbags reduce the risk of injury to passengers on the front seats to the areas of the body facing the impact. In addition to their normal function of protecting the occupants in a collision, the seat belts also hold the passengers on the front seats in a position where the side airbags can provide maximum protection. ▶

The airbag system is not a substitute for seat belts, but it is an integral part of the vehicle's overall passive safety system. Please bear in mind that the airbag system can only work effectively when the occupants are wearing their seat belts. For this reason, it is very important to wear the seat belts at all times, not only because this is required by law in most countries, but also for your safety.

The side airbag system will not be triggered if:

- the ignition is switched off,
- there is a minor side collision,
- there is a frontal collision,
- there is a rear-end collision,
- the vehicle turns over.

The main parts of the airbag system are:

- an electronic control and monitoring system (control unit),
- the side airbags in the sides of the backrests of the front seats,
- a warning lamp in the dash panel insert ⇒ page 27.

The airbag system operation is monitored electronically. The airbag warning lamp will light up for approx. 4 seconds every time the ignition is switched on (self-diagnosis).

WARNING

- **Never drive the vehicle if the interior panels have been removed.**
- **Never drive if the interior door panels have been removed or if the panels have not been correctly fitted.**
- **Never drive the vehicle if the loudspeakers in the door panels have been removed, unless the holes left by the loudspeakers have been correctly closed.**
- **Always check that the openings are closed or covered if loudspeakers or other equipment are fitted in the interior door panels.**

WARNING (continued)

- **Any work carried out to the doors should be made in a qualified authorised workshop.**
- **The seat belts and airbags can only provide maximum protection if the occupants are seated correctly ⇒ page 9, "Proper sitting position for occupants".**
- **If a fault has occured in the airbag system, have the system checked immediately by a qualified workshop. Otherwise, during a side collision, the system may fail to trigger, or not trigger correctly.** ■

Function of side airbags

Inflated airbags can reduce the risk of head or chest injury in many side impact collisions.

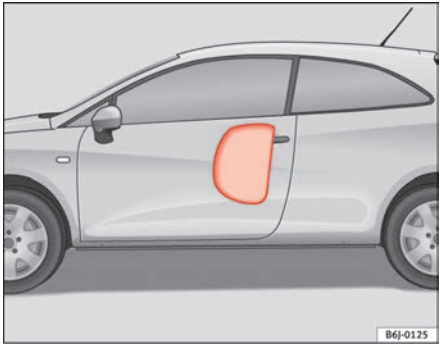

Fig. 20 Inflated side airbag on left side of vehicle

In some **side collisions** the side airbag is triggered on the impact side of the vehicle ⇒ fig. 20.

In certain types of accident the front, curtain and side airbags may be triggered together.

When the system is triggered, the airbag is filled with propellant gas.

In order to provide the desired extra protection in an accident, the airbags have to deploy extremely rapidly (within thousandth of a second). A fine dust may develop when the airbag deploys. This is normal and it is not an indication of fire in the vehicle.

The fully deployed airbags cushion the movement of the occupants of the front seats and help to reduce the risk of injury to the upper body.

The special design of the airbag allows the controlled escape of the propellant gas when an occupant puts pressure on the bag. Thus, the head and chest are surrounded and protected by the airbag. ■

Safety notes on the operation of the side airbag system

If airbags are used correctly, they can considerably reduce the risk of injury in side impact collisions.

WARNING

- If you do not wear a seat belt, if you lean forward, or are not seated correctly while the vehicle is in motion, you are at a greater risk of injury if the side airbag system is triggered in an accident.
- In order for the side airbags to provide their maximum protection, the prescribed sitting position must always be maintained with seat belts fastened while travelling.
- Occupants of the outer seats must never carry any objects or pets in the deployment space between them and the airbags, or allow children or other passengers to travel in this position. It is also important not to attach any accessories (such as cup holders) to the doors. This would impair the protection offered by the side airbags.
- The built-in coat hooks should be used only for lightweight clothing. Do not leave any heavy or sharp-edged objects in the pockets.
- Great forces, such as hard blows or kicks, must not be exerted upon the backrest bolster because the system may be damaged. In this case, the side airbags would not be triggered.
- Under no circumstances should protective covers be fitted over the driver seat or front passenger seat unless the covers have been expressly approved for use in your vehicle. Because the airbag deploys from the side of the backrest, the use of conventional seat covers would obstruct the side airbag, seriously reducing the airbag's effectiveness.
- Any damage to the original seat upholstery or around the seams of the side airbag units must be repaired immediately by a qualified workshop.
- The airbags provide protection for just one accident; replace them once they have deployed.

WARNING (continued)

- When children assume an incorrect sitting position, they expose themselves to an increased risk of injury in the event of an accident. This is particularly the case if the child is travelling on the front passenger seat and the airbag system is triggered in an accident; this could have critical consequences including serious injury or death ⇒ page 40, “Child safety”.
- Any work on the side airbag system or removal and installation of the airbag components for other repairs (such as removal of the front seat) should only be performed by a qualified workshop. Otherwise, faults may occur during the airbag system operation.
- Do not attempt to modify components of the airbag system in any way.
- To ensure the correct functioning of the side and head airbags neither the doors nor the door panels should be modified in any way (e.g. fitting loudspeakers). If the front door is damaged, the airbag system may not work correctly. All work carried out on the front door must be made in a qualified workshop. ■

Curtain airbags

Description of curtain airbags

The airbag system is not a substitute for the seat belts.

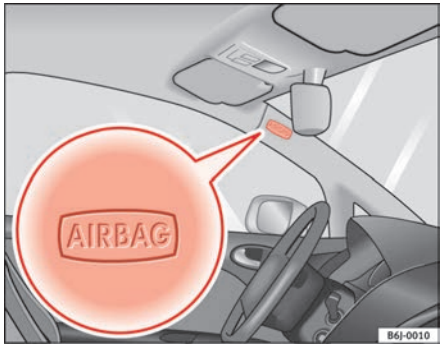

Fig. 21 Location of head airbag on the left side of the vehicle.

The head airbags are located on both sides in the compartment, ⇒ fig. 21 and are identified with the text “AIRBAG”.

In conjunction with the seat belts, the curtain airbag system gives the occupants additional protection for the head and upper body in the event of a severe side collision ⇒ page 36, “Safety notes on the operation of the curtain airbag system”.

The airbag system is not a substitute for seat belts, but it is an integral part of the vehicle's overall passive safety system. Please bear in mind that the airbag system can only work effectively when the occupants are wearing their seat belts correctly and have adjusted the head restraints properly. For this reason, it is very important to wear the seat belts at all times, not only because this is required by law in most countries, but also for your safety.

The main parts of the curtain airbag system are:

- an electronic control and monitoring system (control unit),
- the curtain airbags (airbags with gas generator) for the driver, front passenger and passengers on the rear seats,
- a warning lamp in the dash panel insert ⇒ page 27.

The airbag system operation is monitored electronically.

The curtain airbag system will not be triggered

- the ignition is switched off,
- there is a frontal collision,
- there is a rear-end collision,
- if the vehicle rolls,
- during a minor side collision,

WARNING

If a fault has occured in the airbag system, have the system checked immediately by a qualified workshop. Otherwise there is a danger that during a collision, the system may fail to trigger, or not trigger correctly. ■

Function of curtain airbags

Fully inflated airbags reduce the risk of head or chest injury in a side collision.

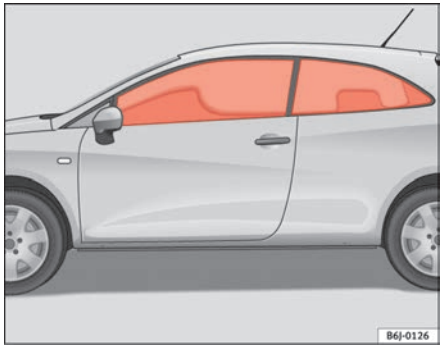

Fig. 22 Deployed curtain airbags

During some **side collisions** the curtain airbag is triggered on the impact side of the vehicle ⇒ fig. 22.

In certain types of accident the front, side and curtain airbags may be triggered together.

When the system is triggered, the airbag is filled with propellant gas. In the process, the curtain bag covers the side windows and door pillars.

In order to provide the desired extra protection in an accident, the airbags have to deploy extremely rapidly (within thousandth of a second). A fine dust may develop when the airbag deploys. This is normal and it is not an indication of fire in the vehicle.

The fully deployed airbags cushion the movement of the front occupants and help to reduce the risk of injury to the upper body.

The special design of the airbag allows the controlled escape of the propellant gas when an occupant puts pressure on the bag. Thus, the head and chest are surrounded and protected by the airbag. ■

Safety notes on the operation of the curtain airbag system

If you use airbags correctly, they can considerably reduce the risk of injury in many kinds of accident.

WARNING

- **In order for the side airbags to provide their maximum protection, the prescribed sitting position must always be maintained with seat belts fastened while travelling.**
- **For safety reasons, the head air bag must be disconnected in those vehicles fitted with a passenger compartment separation screen. See an Authorised Service Centre to make this adjustment.**
- **There must be no other persons, animals or objects between the occupants of the outer seats and the deployment space of the curtain airbags so that the curtain airbag can deploy without restriction and provide the greatest possible protection. Therefore, sun blinds which have not been expressly approved for use in your vehicle should not be attached to the side windows.**
- **The built-in coat hooks should be used only for lightweight clothing. Do not leave any heavy or sharp-edged objects in the pockets. Please, do not hang the clothes on coat hangers.**
- **The airbags provide protection for just one accident; replace them once they have deployed.**
- **Any work on the curtain airbag system or removal and installation of the airbag components for other repairs (such as removal of the roof lining) should only be performed by a qualified workshop. Otherwise, faults may occur during the airbag system operation.**

WARNING (continued)

- **Do not attempt to modify components of the airbag system in any way.**
- **To ensure the correct functioning of the side and head airbags neither the doors nor the door panels should be modified in any way (e.g. fitting loudspeakers). If the front door is damaged, the airbag system may not work correctly. All work carried out on the front door must be made in a qualified workshop.** ■

Deactivating airbags*

Disabling front passenger airbag

If you fit a rear-facing child seat to the front passenger seat, the front passenger airbag must be de-activated.

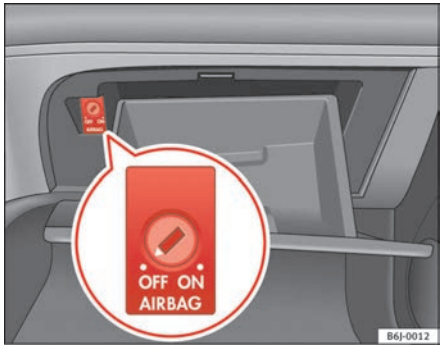

Fig. 23 In the glovebox: key for enabling and disabling front passenger airbag

Fig. 24 Warning lamp for deactivated passenger airbag in centre console

When the passenger airbag is **deactivated**, this means that only the frontal and side airbags are deactivated. All the other airbags in the vehicle remain functional.

Disabling front passenger airbag

– Switch the ignition on.

– Turn the ignition switch in the key operated switch in the glove box to the position **OFF** ⇒ fig. 23.

– Check that the warning lamp “AIRBAG OFF” in the dash panel ⇒ fig. 24 remains lit ⇒ ⚠ when the ignition is switched on.

Enabling front passenger airbag

– Switch the ignition on.

– Turn the ignition switch in the key-operated switch in the glove box to the position **ON** ⇒ fig. 23.

– Check that the warning lamp “AIRBAG OFF” in the console does ⇒ page 38, fig. 24 *not* light up when the ignition is switched on ⇒ ⚠.

⚠ WARNING

- **The driver is responsible for the proper position of the key-operated switch.**
- **You should deactivate the front passenger airbag only if you have to use a rear-facing child seat in exceptional cases. ⇒ page 40, “Child safety”.**
- **Never install a child seat facing backwards (or rear-facing) on the front passenger seat unless the front passenger airbag has been disabled. This represents a risk of fatal injuries to the child! However, if it is necessary in exceptional circumstances to transport a child in a rear-facing child seat on the front passenger seat, you must always disable the front passenger airbag.**
- **As soon as the child seat is no longer needed on the front passenger seat, enable the front passenger airbag again.**
- **Only deactivate the passenger airbag when the ignition is off, otherwise a fault may occur in the airbag system, this will create a danger that in case of an accident, the airbag does not deploy properly or does not deploy at all.**
- **When the passenger airbag is deactivated, if the warning lamp AIRBAG OFF is not continuously lit up when the front passenger airbag is disabled, there may be a fault in the airbag system:**
  - **Have the airbag system inspected immediately by a qualified workshop.**
  - **Do not use a child seat on the front passenger seat! The front passenger airbag could be triggered despite the fact that there is a fault in the system and, as a result, a child could sustain serious or fatal injuries.**

⚠ WARNING (continued)

  - **It is predictable whether the front passenger airbag will deploy during an accident! Warn all your passengers of this.**
- **When using the ignition key to activate / deactivate the passenger frontal airbag, only the passenger frontal and side airbag will be activated / deactivated. The curtain airbag on the passenger side will remain active.** ■

Child safety

Brief introduction

Introduction

Statistics show that children are generally safer on the rear seat than on the front passenger seat.

We recommend that children under 12 years of age are transported on the rear seats. Children travelling on the rear seat must use a child restraint system or the seat belts provided, depending on their age, height and weight. For safety reasons, the child restraint system should be installed in the centre of the rear seat or behind the front passenger's seat.

The physical laws involved and the forces acting in a collision apply also to children. ⇒ page 18, “Why wear seat belts?”. But unlike adults, children do not have muscle and bone structures fully developed. This means that children are subject to a greater risk of injury.

To reduce this risk, children must always use special child restraint systems when travelling in the vehicle.

We recommend the use of child safety products from the SEAT Genuine Accessories Program, which includes systems for all ages made by “Peke”[2].

These systems have been especially designed and approved, complying with the ECE-R44. regulation.

Follow the manufacturer's instructions and observe any statutory requirements when installing and using child seats. Always read and note ⇒ page 41, “Safety notes on using child seats”.

We recommend you to include together with the on-board documentation, the manufacturer's Child Seat instructions manual. ■

[2] Not for all countries

Safety notes on using child seats

Proper use of child seats substantially reduces the risk of injury in an accident!

As the driver, you are responsible for any children you transport in your vehicle.

– Protect your children by properly using appropriate child seats ⇒ page 42.

– Always ensure that the belt webbing is properly positioned according to the instructions provided by the manufacturer of the child seat.

– When travelling, do not allow children to distract you from traffic.

– Take breaks regularly during long trips. Take a break at least every two hours.

WARNING

- **Never install a child seat facing backwards (or rear-facing) on the front passenger seat unless the front passenger airbag has been disabled. This could lead to a risk of potentially fatal injuries to the child! However, if it is necessary, in exceptional cases, to transport a child in the front passenger seat, the front passenger airbag must always be disabled ⇒ page 38, "Deactivating airbags*". If the passenger seat has a height adjustment option, move it to the highest position.**
- **For those vehicles that do not include a key lock switch to turn the airbag off, an Authorised Service Centre must be consulted.**
- **All passengers, especially children, must assume the proper sitting position and be properly belted in while travelling.**

WARNING (continued)

- **Never hold children or babies on your lap, this can result in potentially fatal injuries to the child!**
- **Never allow a child to be transported in a vehicle without being properly secured, or to stand up or kneel on a seat while travelling. In an accident, the child could be flung through the vehicle, causing possibly fatal injuries to themselves and to the other passengers.**
- **If children assume an improper sitting position when the car is moving, they expose themselves to greater risk of injury in the event of sudden braking manoeuvre or in an accident. This is particularly important if the child is travelling on the front passenger seat and the airbag system is triggered in an accident; this could cause serious injury or even death.**
- **A suitable child seat can protect your child!**
- **Never leave an unsupervised child alone on a child seat or in the vehicle.**
- **Depending on weather conditions, it may become extremely hot or cold inside the vehicle. This can be fatal.**
- **Children who are less than 1.5 metres tall must not wear a normal seat belt without a child restraint system, as this could cause injuries to the abdominal and neck areas during a sudden braking manoeuvre or in an accident.**
- **Do not allow the belt webbing to become twisted or jammed, or to rub on any sharp edges.**
- **Incorrectly worn seat belts can cause injuries even in a minor collision or in sudden braking manoeuvres.**
- **The seat belt provides maximum protection only when the belt web is properly positioned ⇒ page 21, "Seat belts".**
- **Only one child may occupy a child seat ⇒ page 42, "Child seats".** ■

Child seats

Categorisation of child seats into groups

Use only child seats that are officially approved and suitable for the child.

Child seats are subject to the regulation ECE-R 44. ECE-R. It means that: Economic Commission for Europe Regulation

The child seats are grouped into 5 categories:

Group 0: Children up to 10 kg

Group 0+: Children up to 13 kg

Group 1: from 9 to 18 kg

Group 2: from 15 to 25 kg

Group 3: from 22 to 36 kg

Child seats that have been tested and approved under the ECE R 44 standard bear the test mark on the seat (the letter E in a circle with the test number below it). ■

Group 0 and 0+ child seats

A suitable child seat and a correctly adjusted seat belt can help you to protect your child.

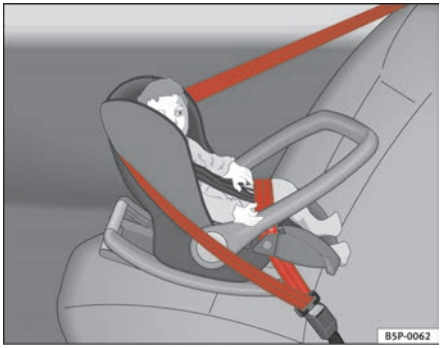

Fig. 25 A group 0 rear-facing child seat fitted on the rear seat.

Group 0: For babies from about 9 months old and 10 kg in weight the most suitable seats are those appearing in the illustration ⇒ fig. 25.

Group 0+: For babies from about 18 months old and 13 kg in weight the most suitable seats are those appearing in the illustration ⇒ fig. 25.

Follow the manufacturer's instructions and observe any statutory requirements when installing and using child seats.

We recommend you to include together with the on-board documentation, the manufacturer's Child Seat instructions manual.

WARNING

Read and always observe information and warnings concerning the use of child seats ⇒ ⚠ in "Safety notes on using child seats" on page 41. ■

Group 1 child seats

A suitable child seat and a correctly adjusted seat belt can help you to protect your child.

Fig. 26 A category 1 forward-facing child seat fitted on the rear seat.

Child seats using the “ISOFIX” system or seats in which the child faces the rear of the car are most appropriate for babies and small children weighing between 9 and 18 kg.

Follow the manufacturer's instructions and observe any statutory requirements when installing and using child seats.

We recommend you to include together with the on-board documentation, the manufacturer's Child Seat instructions manual.

⚠ WARNING

Read and always observe information and warnings concerning the use of child seats ⇒ ⚠ in “Safety notes on using child seats” on page 41. ■

Group 2 and 3 child seats

A suitable child seat and a correctly adjusted seat belt can help you to protect your child.

Fig. 27 Forward-facing child seat installed on rear seat.

Follow the manufacturer's instructions and observe any statutory requirements when installing and using child seats.

We recommend you to include together with the on-board documentation, the manufacturer's Child Seat instructions manual.

Group 2 child seats

Children *under* 7 years of age weighing between 15 and 25 kg are best protected by group 2 child seats together with properly adjusted seat belts.

Group 3 child seats

Children *over* 7 years of age weighing between 22 and 36 kg but less than 1.5 metres tall are best protected by seat cushions with head restraints together with properly worn seat belts ⇒ fig. 27.

WARNING

- **The shoulder part of the seat belt must lie approximately on the centre of the shoulder, never across the neck or the arm. The seat belt must lie close to the upper part of the body. The lap belt part must lie across the pelvis, not across the stomach, and always fit closely. Pull the belt tight if necessary to take up any slack ⇒ page 21, “Seat belts”.**
- **Read and always observe information and warnings concerning the use of child seats ⇒ ⚠ in “Safety notes on using child seats” on page 41.** ■

Securing child seats

Ways to secure a child seat

A child seat can be secured differently on the rear seat and on the front passenger seat.

You can secure a child seat to the rear seat or front passenger seat in the following ways:

- Child seats in groups **0 to 3** can be secured with a seat belt.
- Child seats for groups **0, 0+ and 1** with the "ISOFIX" system can be secured, without fastening seat belts, with the "ISOFIX" securing rings ⇒ page 46.

Category	Weight	Seat locations		
		Front passenger	Rear outer	Rear centre
Group 0	‹10 kg	U*	U	U
Group 0+	‹13 kg	U*	U	U
Group 1	9-18 kg	U*	U/L	U
Group 2 / 3	15-36 kg	X	UF	UF

U: Suitable for universal approved restraining systems for use in this age category (universal retention systems are those fitted using the adult seat belt).

UF Suitable for universal forward-facing retention systems approved for use with this age group.

*: Move the passenger seat as far to rear as possible, as high as possible and always deactivate the airbag.

L: Suitable for retention systems using the "ISOFIX" anchors

X Seat position not suitable for children in this age group.

⚠ WARNING

- **When travelling, children must be secured in the vehicle with a restraint system suitable for age, weight and size.**

⚠ WARNING (continued)

- **Never install a child seat facing backwards (or rear-facing) on the front passenger seat unless the front passenger airbag has been disabled. This could cause fatal injuries to the child! However, if it is necessary, in exceptional cases, to transport a child in the front passenger seat, the front passenger airbag must always be disabled ⇒ page 38, "Deactivating airbags*" and move the seat to its highest position, in case it has this adjustment.**
- **Read and always observe information and warnings concerning the use of child seats ⇒ ⚠ in "Safety notes on using child seats" on page 41.** ■

Securing child seat with the “ISOFIX” system

The child seat with “ISOFIX” system can be secured quickly, easily and safely on the rear outer seats using the system

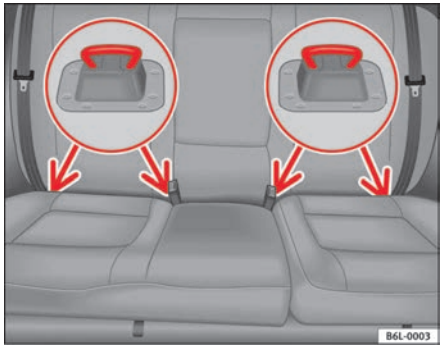

Fig. 28 ISOFIX securing rings

When removing or fitting the child seat, please be sure to follow the manufacturer's instructions.

– Move the seat as far to rear as it will go.

– Press the child seat onto the “ISOFIX” retaining rings until the child seat can be heard to engage securely. If the child seat is fitted with any other antirotation system, follow the manufacturer instructions carefully.

– Pull on both sides of the child seat to ensure that it is secure.

Two “ISOFIX” retaining rings are fitted on each rear seat. In some vehicles, the rings are secured to the seat frame and, in others, they are secured to the rear floor. The access to “ISOFIX” rings is between the rear back rest and the seat.

Child seats with “ISOFIX” mountings are available in your Authorised Service Centres.

WARNING

- **The retaining rings are designed only to use them with “ISOFIX” child seats.**
- **Never secure child seats without the “ISOFIX” system, retaining belts or objects to the fastening rings – this can result in potentially fatal injuries to the child.**
- **Ensure that the child seat is secured correctly by using the “ISOFIX” anchors.** ■

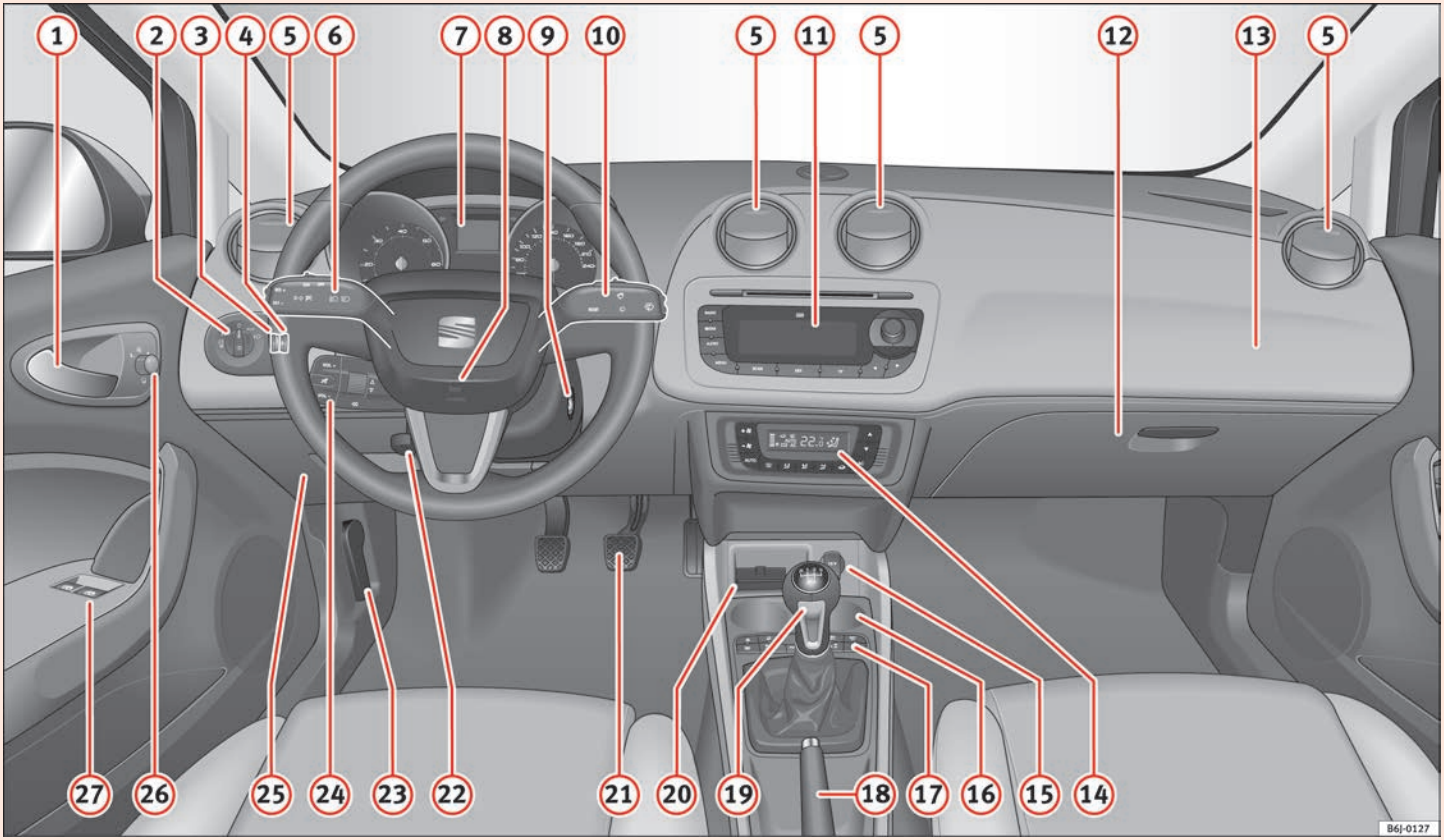

Fig. 29 Instrument panel

Operating instructions

Cockpit

Overview

Overview of the instrument panel

This overview will help you to familiarise yourself with the controls and displays.

1 Door release lever
2 Light switch 88
3 Light dimmer for instrument panel lighting* 89
4 Headlight range control* 89
5 Air vent
6 Turn signal and dipped beam lever and cruise control system* 93, 144
7 Instrument panel and warning lights:
– Instruments 51
– Indication lamps 57
8 Horn (works only when the ignition is on)/ and driver front airbag* 26
9 Steering and starter lock 130
10 Windscreen wiper /windscreen wash* lever and handling of the multi-function display* 96, 53
11 Radio
12 Glove box/Stowage compartment 108
13 Passenger airbag* 29
14 Switches for:
– Heating and ventilation 117
– Air conditioning* 120
– Climatronic* 123
15 Cigarette lighter /Power point 111
16 Drink-holder/Ashtray 110
17 Controls on the centre console:
– Hazard warning lights 92
– Airbag disconnection warning light* 27
– ESP 151
– Tyre pressure control 63
– Rear window heater 91
– Heated seats* 106
– Central locking* 75
– AUX connection 113
18 Handbrake lever 141
19 Automatic / manual gearbox lever * 134, 133
20 Housing* for iPod/USB*
21 Pedals 14
22 Steering column control lever* 128
23 Bonnet release lever 183
24 Steering column controls for audio and telephone* 68
25 Fuse housing 211

26 Control for adjusting electric wing mirrors* 100
27 Electric window controls* 83

Note

Some of the items of equipment listed here are fitted only on certain models/model years or are optional extras. ■

Instruments

Instrument overview

The instruments display the vehicle operating status.

Fig. 30 Detailed view of instrument panel: instrument panel

The layout of the instruments depends upon the model and the engine.

1. Rev counter* ⇒ page 52
2. Digital screen.
3. Speedometer ⇒ page 52
4. Menu selection button on the digital screen on the instrument panel
5. Adjustment button depending on the selected menu ■

Rev counter

The rev. counter displays the engine speed in revolutions per minute.

The start of the red zone ⇒ page 51, fig. 30 (1) indicates the maximum engine speed operating at service temperature. However, it is advisable to change up a into a higher gear, move the selector lever to D or lift your foot off the accelerator before the needle reaches the red zone.

Caution

The rev counter needle must never enter the red zone on the scale. Risk of engine damage.

For the sake of the environment

Changing up into higher gears early will help you to save fuel and minimise engine noise. ■

Speedometer

The speedometer is equipped with a digital odometer and a trip counter, in addition to a service intervals display.

During the running-in period, the instructions shown on ⇒ page 153 should be followed. ■

Digital display in the instrument panel

Fuel gauge and reserve indicator

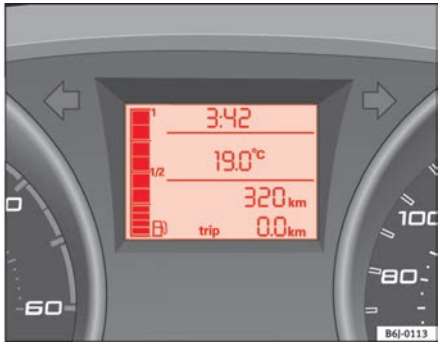

Fig. 31 Fuel gauge

Instrument panel: fuel gauge

The fuel tank has a capacity of approx. 45 litres.

When the needle reaches the reserve zone ⇒ fig. 31 , the warning lamp will light and an acoustic signal will sound **reminding the driver to refuel**. At this point there are still about 7 litres of fuel in the tank. ■

Digital clock*

– To alter the time, press button (4) ⇒ page 51, fig. 30. The option “hour” flashes on the digital display. Set the hour from button (5) “set” ⇒ page 51, fig. 30. ▶

– To set the minutes, press button (4) again and select the minute option. Set from button (5) “set”.

Once the operation has been carried out, the system memorises the time. ■

Speed indicator in mph (miles per hour)*

To see journey speed in mph, press button (4) until the indicator of total distance flashes, with button (5) “SET”, select mph function. Once this option has been chosen, the total distance in Km will be shown when the vehicle is stationary and the mph (miles per hour) indicator while driving.

To deactivate this function, press button (4) until the indicator of total distance in Km flashes, and with button (5) select “SET”. ■

Ambient temperature display

The outside temperature is displayed when the ignition is switched on.

At descending temperatures between +4°C down to -7°C and at ascending temperatures from -5°C up to +6°C in addition to the outside temperature display, an ice crystal is displayed and if vehicle speed is over 10 km/h an acoustic buzzer is heard.

The illumination of the crystal symbol aims to warn the driver of the risk of ice, so that he/she proceeds with due care.

When the vehicle is stationary or travelling at very low speeds, the temperature displayed may be slightly higher than the actual outside temperature as a result of heat coming from the engine. ■

Display with multi-function display (MFD)*

The multi-function display (MFD) shows you information on the journey and fuel consumption.

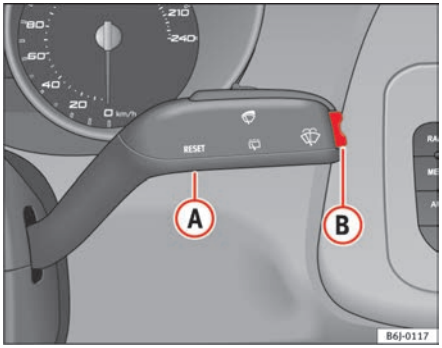

Fig. 32 Windscreen wiper lever: button A and rocker switch B

The multi-function system uses two automatic memories: **1 - Actual memory** and **2 - Total memory**. The selected memory will be shown in the upper right-hand corner of the display.

Selecting a memory

– With the ignition switched on, briefly press the button ⇒ fig. 32 (A) in the windscreen wiper lever to change the memory.

Resetting a memory

– Select the memory that you would like to reset.

– Press and hold button (A) on the windscreen wiper lever for at least 2 seconds.

The **trip memory 1** collects the travel and consumption rates from the moment the ignition is switched on until it is switched off. If the journey is continued within two hours of switching off the ignition, the new values will be added to the existing trip recorder memory. The memory will automatically be deleted if the journey is interrupted for more than two hours.

The **journey memory 2** collects the journey data for any number of individual journeys (even if the ignition is switched off for longer than two hours) up to a total of 99 hours and 59 minutes travel time, 9,999 km distance travelled and 999 litres of fuel consumed. The memory will automatically be deleted if one of the named values is reached. ■

Displays in the multi-function display (MFD)*

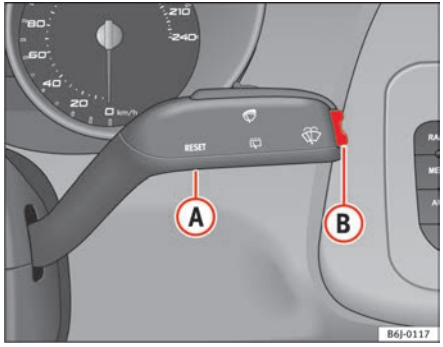

Fig. 33 Windscreen wiper and windscreen wash lever: button A and rocker switch B

You can switch the following displays in the multi-function display (MFD) by operating the rocker switch ⇒ fig. 33 (B) on the windscreen wiper lever.

Memory displays

- Driving speed
- Journey duration
- Average speed
- Distance
- Distance to empty (the distance you can travel with the remaining fuel)
- Average fuel consumption
- Current fuel consumption
- Ambient temperature display
- Speed warning

Km/h - Average speed

Driving speed is digitally shown in the display.

min - Journey duration

The display shows the amount of time which has elapsed since the ignition was switched on.

The maximum display value in both memories is 99 hours and 59 minutes. The memory will automatically be deleted once this value has been reached.

Økm/h - Average speed

The average speed will be shown after running a distance of approximately 100 metres. Dashes will appear in the display until that time. The display will be updated every 5 seconds while the vehicle is in motion.

km - Distance travelled

The display shows the distance travelled since the ignition was switched on.

The maximum display value in both memories is 9999 km. The memory will automatically be deleted once this value has been reached.

Km - Fuel range

The fuel range is calculated using the figures for tank content and current fuel consumption. It shows how far the vehicle can travel using the same conditions as a reference. ▶

Ø litre/100 km - Average fuel consumption

The average fuel consumption will be shown after having travelled approximately 100 metres. Dashes will appear in the display until that time. The display will be updated every 5 seconds while the vehicle is in motion. The amount of fuel used will not be shown.

ltr/100 km or ltr/hr - Current fuel consumption

The display will show the current fuel consumption in litre/km whilst the vehicle is in motion or in litre/hour when the vehicle is in a stationary position with the engine running.

Using this display you can see how your driving style affects fuel consumption ⇒ page 162.

Ambient temperature display

The measurement margin extends from -45°C to +58°C. At temperatures lower than +4°C, an "ice crystal symbol" is displayed and a "warning" sounds if the vehicle is moving at more than 10 km/h (ice warning). This symbol will flash for about 10 seconds and remains lit until the exterior temperature rises above +4°C or 6°C if it was already lit.

Set speed indicator

When the required speed has been reached, enter the mode menu "Speed set" and press button (A) -RESET-. The set speed is memorised. If the indicated speed is exceeded at any time, a warning text is displayed on the screen and a warning signal sounds.[3)]

This may be deactivated by pressing the button RESET. The speed may be altered using the rocker switch (B) in steps of 5 km/h within 5 seconds of the initial memory value.

[3)] Depending on the model version, the message on the screen may vary and may be represented by flashing of the speed indication or by a speed message.

WARNING

There could be black ice on the road surface even if the "snowflake symbol" is not shown. You should, for this reason, not rely exclusively on this display - Risk of accident!

Note

When the vehicle is stationary or travelling at very low speeds, the temperature displayed may be slightly higher than the actual ambient temperature as a result of the heat radiated from the engine. ■

Display field for selector lever position*

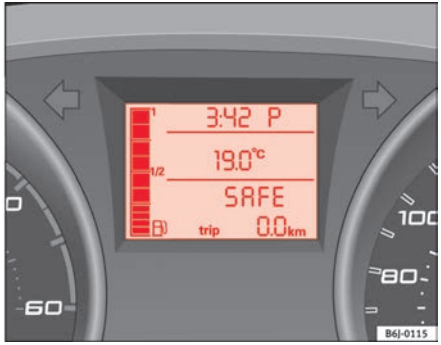

Fig. 34 Digital display: Selector lever position for the automatic gearbox.

The position of the automatic gearbox selector lever is shown on the display ⇒ page 134. ■

Mileage display or Service Interval Display

Fig. 35 Service interval display

Distance display

The upper counter in the display registers the total mileage covered by the vehicle.

The lower counter registers the short journeys. The last digit indicates steps of 100 metres. The trip recorder counter may be reset by the reset button ⇒ page 51, fig. 30 (6).

Service interval display

A **Service pre-warning** will appear in the mileage display if a service is due soon. A spanner symbol appears and the display "km" with the distance that can be driven until the next service appointment is due. The display will change after approximately 10 seconds. A clock symbol appears and the number of days until the next service appointment is due.

The following message appears on the instrument panel if a service is due:

INSP- Maintenance service

The service message will disappear approximately 20 seconds after the ignition is switched on or the engine is running. This may also be turned off pressing the short journey counter reset button for more than 0.5 seconds.[4)]

The Service Centre which carries out the maintenance service will reset the maintenance interval display once the service is finished.

We recommend you to carry out the repair and maintenance work only in the Authorised Service Centres.

If you wish to find out how long before the inspection, press button (4) ⇒ page 51, fig. 30, and select the relevant option from the menu. ■

4) With "Ignition OFF" the maintenance display remains visible.

Warning lamps

Overview of the warning lamps

The warning lamps indicate a number of different functions and possible faults.

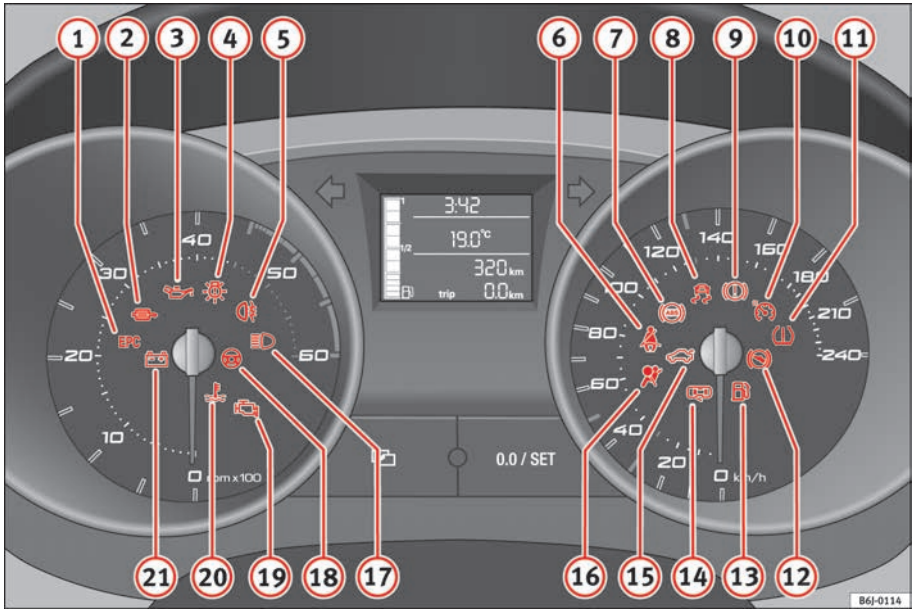

Fig. 36 Instrument panel with warning lamps. Some of the items of equipment listed here are fitted only on certain models/model years or are optional extras.

Item	Symbol	Meaning of warning and control lamps	Further information
1	EPC	Engine fault (petrol engine)	⇒ page 60
1		Glow plug system for diesel engine **If lit:** preheating active **If flashing:** engine fault	⇒ page 60
2		Pollen accumulation in the diesel engine particulate filter	⇒ page 60
3		Engine oil pressure	⇒ page 61
4		Bulb defective	⇒ page 61
5		Rear fog light switched on	⇒ page 61
6		Seat belt warning lamp*	⇒ page 16
7	ABS	Anti-lock brake system (ABS) *	⇒ page 61
8		**If flashing**: electronic stabilisation programme (ESP) is working **If it remains lit:** fault on ESP	⇒ page 62
9		Handbrake applied, lack of brake fluid level or serious fault in the brake system	⇒ page 63
10		Cruise control system switched on	⇒ page 63
11		Tyre pressure	⇒ page 63

Item	Symbol	Meaning of warning and control lamps	Further information
12		Automatic selector lever lock (automatic gearbox)	⇒ page 64
13		Fuel level / reserve	⇒ page 64
14		Doors open	⇒ page 64
15		Tailgate open	⇒ page 65
16		Airbag or belt tension device system fault or airbag disabled	⇒ page 27
17		Main beam switched on	⇒ page 65
18		Electro-hydraulic steering	⇒ page 65
19		Fault in the emission control system	⇒ page 65
20		Coolant level / coolant temperature	⇒ page 65
21		Alternator fault	⇒ page 66
		Turn signals in operation	⇒ page 66
	SAFE	Electronic immobiliser	⇒ page 66

WARNING

- **Failure to observe warning lamps and warning messages can result in serious personal injuries or damage to your vehicle.**
- **The risk of an accident increases if your vehicle breaks down. Use a warning triangle to draw the attention of other road users in order to prevent danger to thirds.**

WARNING (continued)

- **The engine compartment is a dangerous area! Before you open the bonnet to work on the engine or in the engine compartment, you must switch the engine off and allow it to cool to reduce the risk of scalding or other kind of injuries. Read and observe the relevant warnings ⇒ page 181.**

Note

- The appropriate warning lamp for a fault will light up in vehicles without warning or information texts in the display.
- In vehicles with warning or information texts on the screen, the appropriate warning lamp for a fault will light up and a warning or information text will also appear on the screen. ■

Engine management EPC

This warning lamp monitors the engine management system for petrol engines.

The warning lamp EPC (Electronic Power Control) lights up when the ignition is switched on to show that the lamp is working properly. It should go out once the engine is started.

If there is a fault in the electronic engine management system while you are driving, this warning lamp will light up. Stop the vehicle and seek technical assistance. ■

Glow plug system / Engine fault* ℳ

The warning lamp lights up to show that the glow plugs are preheating. It flashes if there is an engine fault.

Warning lamp ℳ is lit

The warning lamp ℳ lights up while the glow plugs are preheating. When the warning lamp goes off, the engine should be started straight away.

Warning lamp ℳ flashes

If a fault develops in the engine management system while you are driving, the glow plug lamp will flash ℳ. Take the vehicle to an Authorised Service Centre as soon as possible and have the engine checked. ■

Soot accumulation in the diesel engine particulate filter *

If the indicator lights you may help the filter clear itself by driving in the appropriate manner.

To do this, drive about 15 minutes in 4th or 5th gear (automatic gearbox: S gear range) at a speed of 60 km/h, with the engine running at approximately 2000 rpm. In this way, the pollen build up in the filter is burned. When cleaning is successful, the indicator turns off.

If the indicator is not deactivated, bring the vehicle to a specialised workshop to repair the fault.

WARNING

- **Always drive according to the road weather conditions, the terrain and traffic. Driving recommendations should never lead to illegal manoeuvres in surrounding traffic.**
- **The diesel engine particulate filter may reach extremely high temperatures; it should not enter into contact with flammable materials underneath the vehicle. Failure to comply could result in fire.** ■

Engine oil pressure

This warning lamp indicates that the engine oil pressure is too low.

If this warning symbol starts to flash, and is accompanied by three **audible warnings**, switch off the engine and check the oil level. If the oil level is too low, add more oil.

If the symbol flashes although the oil level is correct, *do not* drive on. The engine must not even run at idle speed. Obtain technical assistance. ■

Bulb defect*

The indicator lights up when a bulb is not functioning.

The indicator lights up when there is a fault on the flasher lights, headlights, position light and fog lights. ■

Rear fog light*

This warning lamp lights up when the rear fog light is switched on. Further information ⇒ page 88. ■

Anti-lock brake system (ABS)

A warning lamp system monitors the ABS.

The warning lamp should light up for a few seconds when the ignition is switched on. It goes out again after the system has run through an automatic test sequence.

There is a fault in the ABS if:

- The warning lamp does not light up when the ignition is switched on.
- The warning lamp does not go out again after a few seconds.
- The warning lamp lights up when the vehicle is moving.

The vehicle can still be braked in the normal way (except that the ABS control function will not function). Please take the vehicle to a qualified workshop as soon as possible. For further information on the ABS see the ⇒ page 150

If there is a fault in the ABS, the ESP* and the tyre pressure warning lamp will also light up.

Brake system fault

If the ABS warning lamp lights up together with the brake warning lamp , this indicates not only a fault in the ABS function, but also a possible fault in the brake system. ⇒ ⚠

⚠ WARNING

- **Before opening the bonnet, read and observe the warnings on ⇒ page 181, “Working in the engine compartment”.**
- **If the brake warning lamp should light up together with the ABS warning lamp , stop the vehicle immediately and check the brake fluid level in the reservoir ⇒ page 193, “Brake fluid”. If the fluid level has dropped below the “MIN” mark you must not drive on. Risk of accident. Obtain technical assistance.**

WARNING (continued)

- **If the brake fluid level is correct, the fault in the brake system may have been caused by a failure of the ABS system. This could cause the rear wheels to lock quickly when you brake. This could cause the rear to break away. Risk of skidding. Stop the vehicle and seek technical assistance.** ■

Differential lock fault (EDL)*

*EDL operates along with the ABS in vehicles equipped with an Electronic Stabilisation Program (ESP)**

A malfunction in the EDL is indicated by the ABS warning lamp (ABS). Please take the vehicle to a qualified workshop as soon as possible. For further information on the EDL ⇒ page 152, “Electronic differential lock (EDL)*” ■

Traction control system (TCS)*

The traction control system prevents the driven wheels from spinning when the vehicle is accelerating

The warning lamp lights up when the ignition is switched on and should turn out after about 2 seconds.

When the TCS is operating while driving, its warning lamp flashes rapidly. If there is a fault in the system, the diode is lit permanently.

It will also come on if a fault should occur in the ABS because the TCS operates in conjunction with the ABS. For further information see ⇒ page 149, “Brakes”

If ESP* button is activated, TCS function deactivates and the warning lamp flashes slowly. By pressing again, TCS function is reactivated and the warning lamp switched off. ■

Electronic stabilisation programme (ESP)*

This warning lamp monitors the electronic stabilisation programme.

This programme includes the ABS, EDL and TCS.

The warning lamp has the following functions:

- It will light for about 2 seconds when the ignition is switched on while a test of the function is carried out.
- It flashes rapidly when the ESP is activated while driving.
- It will light up continuously if there is a malfunction in the ESP.
- It will also come on if a fault should occur in the ABS because the ESP operates in conjunction with the ABS.

If the ESP warning lamp lights up and stays on after the engine is started, this may mean that the control system has temporarily switched off the ESP. In this case the ESP can be reactivated by switching the ignition off and then on again. If the warning lamp goes out, this means the system is fully functional. ■

Brake system* / handbrake

The warning lamp lights up if the handbrake is applied, if the brake fluid level falls too low or if there is a fault in the brake system.

This warning lamp lights up if

- If the handbrake is applied
- If the brake fluid level is too low ⇒ page 193
- If there is a fault in the brake system

This warning lamp can light up together with the anti-lock brake system warning lamp.

WARNING

- **If the brake warning lamp does not go out, or if it lights up when driving, the brake fluid level ⇒ page 193, "Brake fluid" in the reservoir is too low. Risk of accident. Stop the vehicle and do not drive on. Obtain technical assistance.**
- **If the brake warning lamp lights up together with the ABS warning lamp, the control function of the ABS could be out of action. This could cause the rear wheels to lock quickly when you brake. This could cause the rear to break away. Risk of skidding. Stop the vehicle and seek technical assistance.** ■

Cruise control system*

The warning lamp comes on when the cruise control system is switched on.

The warning lamp lights up when the cruise control system is switched on. Further notes on the cruise control system ⇒ page 144. ■

Tyre pressure*

Fig. 37 Centre console: tyre monitor system button

The tyre monitor [5] compares wheel revolutions and with this information, the diameter of each wheel using the ESP sensors. If the diameter of a wheel changes, the tyre monitor indicator lights . The wheel diameter changes when:

- Tyre pressure is insufficient.

[5] Depending on the model version

- The tyre structure is damaged.
- The vehicle is unbalanced because of a load.
- The wheels of one axle are under more pressure (for example, driving with a trailer or on extreme slopes).
- The vehicle is fitted with snow chains.
- The emergency wheel is fitted.
- The wheel on one axle is changed.

Tyre pressure adjustment

Following the modification to tyre pressure or changing one or more wheels, the button ⇒ page 63, fig. 37 must be kept pressed while the ignition is on until an acoustic signal is heard.

If the wheels are under excessive load (for example, driving with a trailer or heavy load), the tire pressure must be increased to the recommended value for a full load (see the sticker on the inside of the fuel flap). If the tyre monitor system button is pressed down, the new tyre pressures are confirmed.

The tyre pressure monitor indicator (!) lights up

If the tyre pressure of one wheel is much lower than the value set by the driver, then the indicator lights up. ⇒ ⚠

⚠ WARNING

- **When the tyre pressure indicator lights, reduce speed immediately and avoid any sudden manoeuvre or braking. Stop when possible, and check the tyre pressure and status.**
- **The driver is responsible for correct tyre pressure. For this reason, tyre pressure must be regularly checked.**
- **Under certain circumstances (for example, in a sports situation, in winter conditions or on a dirt track) the tyre monitor indicator may light or function incorrectly.**

Note

If the battery is disconnected, the yellow indicator (!) lights up after turning the ignition on. This should turn off after a brief journey. ■

Speed selector lever lock* (⊘)

The footbrake must be depressed when this warning lamp lights up. This is necessary when the automatic gearbox* selector lever is moved out of the positions **P** or **N**. ■

Fuel level / reserve ⛽

This symbol lights up to indicate that the fuel tank under the reserve level.

It lights up when only 7 litres of fuel remain in the tank. Moreover, an **audible warning*** is heard. It reminds you to fuel up the fuel tank as soon as possible ⇒ page 178. ■

Indicates that the doors are open* 🚪

This indicator lights if one of the doors or the tailgate is open.

The warning light should go off when all the doors are closed correctly. ■

Tailgate open*

The warning lamp should switch off when the tailgate is fully closed. ■

Main beam headlights

This warning lamp lights up when the main beams are on.

The warning lamp is switched on once main beams are on or once the headlight flasher is operating.

Further information ⇒ page 93 ■

Electro-hydraulic steering*

The level of steering assistance depends on the vehicle speed and on the steering wheel turning speed.

The warning lamp should light up for a few seconds when the ignition is switched on. It should go out once the engine is started.

There is a fault in the electro-hydraulic steering system if the lamp does not go out or lights up whilst the vehicle is in motion. Take the vehicle to the Authorised Service Centre as soon as possible.

Note

When towing the vehicle with the engine stopped or due to a fault in the power steering, this will not operate. The vehicle can still be steered, but it will require greater force to turn the steering wheel. ■

Emission control system*

This warning lamp monitors the exhaust system.

Warning lamp flashes:

When there is misfiring that can damage the catalytic converter. Reduce speed and drive carefully to the nearest qualified workshop to have the engine checked.

Warning lamp is lit:

If a fault has developed during driving which has reduced the quality of the exhaust gas (e.g. lambda probe fault). Reduce speed and drive carefully to the nearest qualified workshop to have the engine checked. ■

Coolant Level* / temperature

The warning lamp lights up if the coolant temperature is too high or if the coolant level is too low.

There is a fault if:

- The warning symbol does not go out again after a few seconds.
- The warning lamp lights up or flashes while the vehicle is moving, while **three acoustic warning signals** ⇒ ⚠ are emitted.

This means that either the coolant level is too low or the coolant temperature is too high.

Coolant temperature too high

If the warning light lights up, **stop the vehicle, switch the engine off and wait for it to cool down.** Check the coolant level.

If the coolant level is correct, the overheating may be caused by a malfunction of the radiator fan. Check the radiator fan fuse and have it replaced if necessary ⇒ page 211.

If the warning lamp lights up again after driving on for a short distance, **stop the vehicle and switch the engine off**. Contact an Authorised Service Centre or a qualified workshop.

Coolant level too low

If the warning light lights up, **stop the vehicle, switch the engine off and wait for it to cool down.** First check the coolant level. If the level is underneath the "MIN" mark, top up with coolant ⇒ ⚠.

WARNING

- **If your vehicle is immobilised for any technical reasons, move it to a safe distance from traffic. Turn the engine off, turn the hazard lights on and place the warning triangle.**
- **Never open the bonnet if you can see or hear steam or coolant escaping from the engine compartment. Risk of scalding. Wait until you can no longer see or hear escaping steam or coolant.**
- **The engine compartment is a dangerous area! Before carrying out any work in the engine compartment, switch off the engine and allow it to cool down. Always note the corresponding warnings. ⇒ page 181** ■

Alternator

This warning lamp signals a fault in the alternator.

The warning lamp lights up when the ignition is switched on. It should go out when the engine has started running.

If the warning lamp lights up while driving, the alternator is no longer charging the battery. You should immediately drive to the nearest qualified workshop.

You should avoid using electrical equipment that is not absolutely necessary because this will drain the battery.

If the indicator flashes the voltage is insufficient for normal vehicle operation. ■

Turn signals

The warning lamp flashes when the indicators are in operation.

Depending on which indicator is operating, either the left or right indicator lamp flashes. Both warning lamps will flash at the same time when the hazard warning lights are switched on.

If any of both indicators fails, the warning lamp will start flashing twice faster than normal.

Further information on the indicators ⇒ page 93. ■

Electronic immobiliser* "Safe"

This warning lamp flashes if an unauthorised key is used.

Inside the key there is a chip that deactivates the electronic immobiliser automatically when the key is inserted into the ignition. The immobiliser will be activated again automatically as soon as you pull the key out of the ignition lock.

The instrument panel displays shows the following message[6]: **SAFE**. The vehicle cannot be started in this case

The engine can, however, be started if the appropriate coded SEAT genuine key is used. ▶

[6] Depending on the version of the model.

Note

The vehicle cannot operate properly if you do not have a genuine SEAT key. ■

Steering column controls*

General information

The column incorporates multifunctional modules from which to control audio and telephone functions on the vehicle.

There are two versions of the multifunction module:

- Audio version, to control the available audio functions from the steering wheel.
- Audio version+ Telephone version, to control the available audio functions and the telephone system from the steering wheel.

Both versions can be used to control the Audio system (Radio, CD Audio, CD MP3). ■

Audio Control

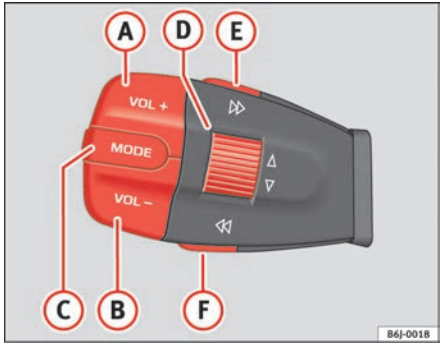

Fig. 38 Audio controls ▶

Button	Short press			
	Radio	CD Audio	CD mp3 / MDI[a)]	AUX-IN
A	Volume up			
B	Volume down			
C	Cyclic source control FM - AM - CD - FM...			
D	Station search. Higher frequency △	Following track		No function
D	Station search. Lower frequency ▽	Previous track		No function
E	Next preset	No function	Change folder (forward)	No function
F	Previous preset	No function	Change folder (back)	No function

a) Only for mp3 compatible radio.*

Audio + Telephone Control

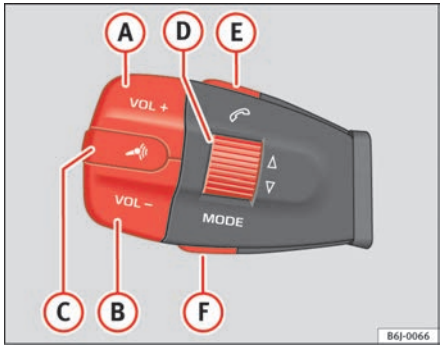

Fig. 39 Audio + Telephone Control

Button	Short press				Long press			
	Radio	CD	CD mp3 / MDI[a)]	AUX-IN	Radio	CD	CD mp3 / MDI[a)]	AUX-IN
A	Volume up				Continue volume up			
B	Volume down				Continue volume down			
C	Voice recognition activation Press to speak				No specified function			
D	Station search. Higher frequency △	Following track		No function	Station search. Higher frequency △	Following track		No function

D	Station search. Lower frequency ▽	Previous track	No function	Station search. Lower frequency ▽	Previous track	No function
E	Accept call / hang up			Reject call		
F	Cyclic source control FM - AM - CD - FM...			Cyclic source control FM - AM - CD - FM.		

a) Only for mp3 compatible radio.

Unlocking and locking

Central locking

Description

The central locking system enables you to lock and unlock all doors with just pushing on the keybutton.

Central locking can be activated by using any of the following options:

- **the key**, by inserting it into the driver's door cylinder and rotating it manually,
- **the interior central locking button** ⇒ page 75.
- **the radio frequency remote control**, using the buttons on the key ⇒ page 77.

Various functions are available to improve the vehicle safety:

- Locking system “Safe”
- Selective unlocking system*
- Self-locking system to prevent involuntary unlocking
- Automatic speed-dependent locking and unlocking system*
- Emergency unlocking system

WARNING

- **Locking from the outside without seeing may cause bruising to other people, particularly tochildren.**
- **When locking a vehicle, never leave children unaccompanied inside, as from the outside it will be difficult to provide assistance if required.**
- **Having the doors locked prevents an intrusion from getting in, for example when stopped at a traffic light.**

Note

For anti-theft security, only the driver's door is fitted with a lock cylinder. ■

Safety system “Safe*”

This is an anti-theft device which consists of a double lock for the door locks and a deactivation function for the boot in order to prevent a forced entry.

Activation

The “safe” system is activated when the vehicle is locked using the key or the remote control.

To activate it with the key, rotate once it is inserted in the door lock cylinder in the locking direction.

To activate the system using the remote control, press the lock button once 🔒 on the remote.

Once this system is activated, opening doors from the outside and the inside is not possible. The tailgate can not be opened. The central locking button does not work.

Deactivation

Rotate the key inserted in the lock cylinder twice towards the locking direction.

To activate the system using the remote control, press the lock button on the remote twice 🔒 in less than five seconds. ▶

On deactivating the “Safe” system, the alarm volumetric sensor is also deactivated.

With the “Safe” switched off, doors can be opened from the interior but not from the exterior.

See “Selective unlocking system*”

“Safe” status

On the driver's door, there is a visible light indicator which shows the “Safe” system status.

We will know that “Safe” system is activated by the flashing light indicator. The indicator will flash on all vehicles, fitted and nor fitted with an alarm, until they unlock.

Remember:

Safe activated with or without an alarm: Continuous Indicator flashes.

Safe deactivated without an alarm: The indicator remains off.

Safe deactivated with an alarm: The indicator remains off.

WARNING

No one should remain inside the vehicle if the “Safe” mechanism is activated because opening the doors will not be possible in case of emergency neither from the inside nor the outside. Danger of death. Passengers could become trapped inside in case of emergency. ■

Selective unlocking system*

This system allows to unlock either just the driver's door or all the vehicle.

Driver's door unlock button

Unlock once. Use either the key or the remote control.

Once the key is inserted in the lock cylinder, rotate once in the unlock direction. The driver's door will remain without “Safe” and unlocked. In vehicles fitted with alarm, see Anti-theft Alarm System chapter. ⇒ page 78

Using the remote control, press the unlock button on the remote once. The “Safe” system for all the vehicle is deactivated, only the driver's door is unlocked and both the alarm and the light indicator are also turned off.

Unlocking all doors and the boot

The unlock button on the remote must be pressed twice so that all doors and the boot can be opened.

Press twice within 5 seconds to deactivate the “Safe” system for all vehicle, to unlock all doors and to use the boot. The indicator and the alarm (only vehicles fitted with one) are turned off.

Unlocking the boot

See ⇒ page 81

Activating the selective unlocking system*

With the door open, insert a key into the start cylinder and start the ignition. Insert the other key into the driver's door lock and turn in the opening direction for at least 3 seconds. The indicators will flash twice.

Deactivating the selective unlocking system*

With the door open, insert a key into the start cylinder and start the ignition. Insert the other key into the driver's door lock and turn in the locking direction for at least 3 seconds. The indicators will flash once. ■

Involuntary unlocking

It is an anti-theft system and prevents the unintentional unlocking of the vehicle.

If the vehicle is unlocked and any of the doors (including the tailgate) are opened within 30 seconds, it gets re-locked automatically. ■

Automatic speed dependent locking and unlocking system*

This is a safety system which prevent the access to the vehicle from the outside when it is running (for example, when stopped at a traffic light).

Locking

The doors lock automatically after exceeding 15km/h. The tailgate locks automatically after exceeding 6 km/h.

If the vehicle is stopped and any of its doors open, when starting again and exceeding the mentioned speed, all doors will lock again.

Unlocking

On withdrawing the ignition key, the vehicle will returns to its status prior to self-locking.

Each door can be unlocked and opened independently from the inside (for example, when a passenger gets out of it). To do it, simply operate the lever inside the door.

Activating the system*

With the ignition on, press the locking key on the central locking system within 3 to 10 seconds.

Deactivating the system*

With the ignition on, press the unlocking key on the central locking system within 3 to 10 seconds.

In both cases, if the operation has been carried out correctly, the locking lamp will flash ⇒ page 75, fig. 40.

WARNING

The door handles must not be operated when the vehicle is running: the door would open.

Note

If the airbags are triggered during an accident, the vehicle gets unlocked, except for the boot. It is possible to lock the vehicle from inside with the central locking, after turning the ignition off and back on again. ■

Central locking button

The central locking button allows you to lock and unlock the vehicle from the inside.

Fig. 40 Central locking button

Locking the vehicle

– Press the button ⇒ fig. 40 ⇒ ⚠.

Unlocking the doors

– Press the button ⇒ fig. 40.

The central locking button is still operative when the ignition is switched off. Except when the "safe" security system is activated.

Please note the following if you lock your vehicle with the central locking button:

- Safety reasons make not be possible to open the doors or the tailgate from the *outside* (for instance, when stopped at a traffic light).
- The driver door cannot be locked. This avoids the user from forgetting his key inside the vehicle.
- All doors can be locked separately from inside the car. Do this by pulling the door release lever *once*.

⚠ WARNING

- **If the vehicle is locked, children and disabled people may be trapped inside it.**
- **Repeated operation of central locking will prevent the central locking button from working for a few seconds. Then, it can only be unlocked in case it has been previously locked. After few seconds, the central locking becomes operative again.**
- **The central locking button is not operative when the vehicle is locked from the outside (with the remote control or the key).**

Note

- Locked vehicle, button
- Unlocked vehicle, button . ■

Keys

Set of keys

The set of keys includes a remote control, a key without a remote control and a plastic key tab with the number of the key.

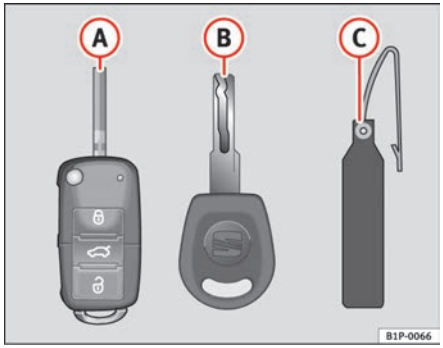

Fig. 41 Set of keys

The set of keys belonging to your vehicle consists of the following items:

- a remote control key ⇒ fig. 41 (A)
- a key without remote control (B),
- one plastic key tab (C) with the key number.

Plastic key tab

Duplicates can only be issued with the key number on the key tab ⇒ fig. 41 (B). Therefore:

- Always keep the key tab in a safe place.
- Never leave the key tab in the vehicle.

If you sell the vehicle, please give the plastic key tab to the new owner.

Duplicate keys

If you need a replacement key, take your key tab to an Authorised Service Centre.

WARNING

- **An incorrect use of the keys can cause serious injuries.**
- **Never leave children or disabled persons in the vehicle. In case of emergency, they may not be able to leave the vehicle and not manage on their own.**
- **An uncontrolled use of the key could start the engine or activate any electric equipment(e.g. electric windows), causing risk of accident. The doors can be locked using the remote control key. This could make the aid difficult in an emergency situation.**
- **Never forget the keys inside the vehicle. An unauthorised use of your vehicle could result in injury, damage or theft. Always take the key with you when you leave the vehicle.**
- **Never remove the key from the ignition if the vehicle is in motion. Otherwise, the steering could suddenly block and it would be impossible to steer the vehicle.**

Caution

There are electronic components in the remote control key. Avoid wetting and hitting the keys ■

Radio frequency remote control

Locking and unlocking the vehicle

The remote control key is used to lock and unlock the vehicle from a distance.

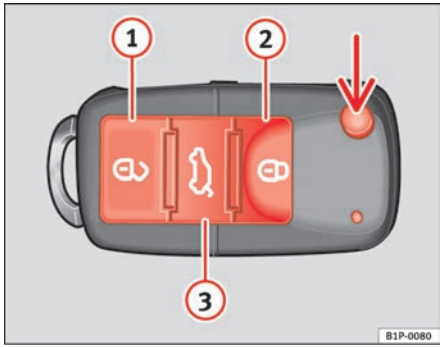

Fig. 42 Assignment of buttons on the remote control key

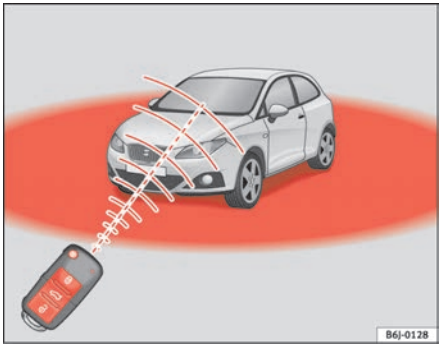

Fig. 43 Range of the remote control:

Using the button ⇒ fig. 42 (arrow) on the control, the key shaft is released.

Unlocking the vehicle ⇒ fig. 42 (1).

Locking the vehicle ⇒ fig. 42 (2).

Unlocking the tailgate. Press the button ⇒ fig. 42 (3) until all vehicle indicators briefly flash. When the unlocking button (3) is pressed, you have 2 minutes to open the door. Once this time has passed, it will lock once more.

Also, the battery indicator on the key ⇒ fig. 43, will flash.

The remote control transmitter and the batteries are integrated in the key. The receiver is inside the vehicle. The maximum scope of the remote control depends on various conditions. This scope is reduced when the batteries start to lose power.

WARNING

- **An improper use of the key can cause serious injuries.**

WARNING (continued)

- **Never leave children or disabled persons in the vehicle. In case of emergency, they may not be able to leave the vehicle and not manage on their own.**
- **Never forget the keys inside the vehicle. Otherwise, this could result in serious injuries, accidents or even the theft of your vehicle. Always take the key with you when you leave the vehicle.**
- **An uncontrolled use of the key could start the engine or activate any electric equipment(e.g. electric windows), causing risk of accident. The vehicle can be locked when using the remote control key. This could complicate the aid in cas of emergency.**

Note

- The remote control key functions only when you are in its range ⇒ page 77, fig. 43.
- If the vehicle cannot be unlocked or locked by using the radio-frequency remote control, the remote control key will have to be re-synchronised. For this, go to your Technical Service. ■

Changing the battery

If the battery indicator does not flash when the buttons are pushed, the battery must be replaced.

Caution

The use of inappropriate batteries may damage the radio frequency remote control. For this reason, always replace the dead battery with another of the same size and power.

For the sake of the environment

The flat batteries must be thrown away in accordance with regulations governing the protection of the environment. ■

Anti-theft alarm system*

Description of anti-theft alarm system*

The anti-theft alarm triggers if unauthorised movements are detected around the vehicle.

The anti-theft alarm makes it more difficult to break into the vehicle or steal it. The system will initiate acoustic and optical warning signals when your vehicle is tried to be forced.

The anti-theft alarm system is automatically connected on locking the vehicle. For this, either rotate the key in the locking position or press button 🔒 (2) on the radio-frequency remote control*. The system is immediately activated and the indicator light located on the driver's door will flash along with the indicators, indicating that the alarm and the locking security system (double lock) have been turned on.

If any of the doors or the bonnet are open, they will not be included in the protection zones of the vehicle when the alarm is connected. If the door or the bonnet are subsequently closed, they will be automatically included in the protection areas of the vehicle and the indicators will flash accordingly when the doors close.

- The indicator light will flash twice on opening and deactivating the alarm..
- The indicator light will flash once on closing and activating the alarm. ▶

When does the system trigger an alarm?

The system triggers an alarm if the following unauthorised actions are carried out when the car is locked:

- Opening of vehicle with mechanical key without switching ignition on within the next 15 seconds
- Opening a door
- Opening the bonnet
- Opening the tailgate
- Ignition switched on with a non-validated key.
- Movements in the driving compartment (vehicles with a volume sensor)
- Towing of the vehicle[7)]
- Tilt angle (tow-away protection)[7)]
- Undue manipulation of the alarm
- Battery handling

The acoustic signals sound and the indicators flash for approx. 30 seconds. This may be repeated up to 10 times depending on the country.

How to switch the alarm off

To deactivate the anti-theft alarm, turn the key to the opening direction, open the door and switch the ignition on, or press the unlocking button on the remote control.

In vehicles equipped with an anti-theft alarm system, you have 15 seconds to insert the key in the ignition lock and activate the ignition if the vehicle is opened using the driver's door key.

Otherwise, the alarm will trigger for 30 sec. and the ignition will be blocked.

7) With vehicles fitted with a tow-away protection

Note

- After 28 days, the indicator light will be switched off to prevent the battery from exhausting if the vehicle has been left parked for a long period of time. The alarm system remains activated.
- The alarm will trigger again if attempts are made to open another protection zone.
- The alarm system can be activated or deactivated using the remote control. ⇒ page 77. ■

Interior monitor and anti-towing alarm*

Monitoring or control function incorporated in the anti-theft alarm which detects unauthorized vehicle entry by means of ultrasound.*

Activation

– It is connected automatically when the anti-theft alarm is activated.

Deactivation

– Open the vehicle with the key, either mechanically[8)] or by pressing the button on the remote control.

– Press the button on the remote control twice. The volumetric sensor and tilt sensors will be deactivated. The alarm system remains activated.

8) The time period from when the door is opened until the key is inserted in the contact should not exceed 15 sec., otherwise the alarm will be triggered.

The interior monitor and the anti-towing alarm are automatically switched on again next time the vehicle is locked.

The interior monitor and anti-towing alarm (tilt sensor) are automatically switched on when the anti-theft alarm is switched on. In order to activate it, all the doors and the tailgate must be closed.

If you wish to disconnect the interior monitor and the anti-towing system, it must be done each time that the vehicle is locked; if not, they will connect automatically.

The interior monitor and the anti-towing system should be disconnected if animals are left inside the locked vehicle (otherwise, their movements will trigger the alarm) or when, for example, the vehicle is transported or has to be towed with only one axle on the ground.

False alarms

The interior monitor only operates correctly if the vehicle is completely closed. Please observe legal requirements when doing so.

The following cases may cause a false alarm:

- opened windows (partially or fully)
- panoramic glass roof/sunblind open (partially or completely).
- movement of objects inside the vehicle, such as loose papers, items hanging from the rear view mirror (air fresheners), etc.

Note

- If the vehicle is relocked and the alarm is activated without the volumetric sensor function, relocking will activate the alarm with all its functions, except the volumetric sensor. This function is reactivated when the alarm is switched on again, unless it is deliberately switched off.
- If the alarm has been triggered by the volumetric sensor, this will be indicated by a flashing of the indicator on the driver's door. The flash is different to the flash indicating the alarm is activated.
- The vibration of a mobile phone left inside the vehicle may cause the interior monitor alarm to trigger, as both sensors react to movements and shakes inside the vehicle.
- If on activating the alarm, any door or the tailgate is open, only the alarm will be activated. The interior monitor and the anti-towing system will only be activated once all the doors are closed (including the tailgate). ■

Tailgate

Unlocking and locking

The operation of the tailgate opening system is electric. It is activated by using the handle on the tailgate

Fig. 44 Tailgate: opening from the outside

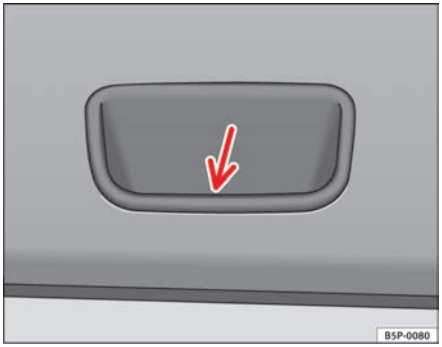

Fig. 45 Detail of the inside of the tailgate: hand grip

Opening the tailgate

– Pull on the release lever and lift the tailgate ⇒ fig. 44. The tailgate will be automatically open.

Closing the tailgate

– Grip the tailgate by one of the two handles on the interior lining and close it, using a light movement.

The system may or may not operate depending on the situation of the vehicle.

If the tailgate is locked then it cannot be opened, however if it is unlocked then the opening system is operative and the boot may be opened.

To change the locking / unlocking status, press the button or the button (1) ⇒ page 77, fig. 42on the remote control key.

A warning appears in the instrument panel if the tailgate is open or not properly closed.* An audible warning is also given if the tailgate is opened while the vehicle is moving faster than 6 km/h.*

WARNING

- **Always close the tailgate properly. Risk of accident or injury.**
- **The tailgate must not be opened when the reverse or rear fog lights are lit. This may damage the pilot lights**
- **Do not close the tailgate by pushing it down with your hand on the rear window. The glass could smash. Risk of injury!**
- **Ensure the tailgate is locked after closing it. If not, it may open unexpectedly while driving.**
- **Never allow children to play in or around the vehicle. A locked vehicle can be subjected to extremely high and low temperatures, depending on the time of year, thus causing serious injuries/illness. It could even have fatal consequences. Close and lock both the tailgate and all the other doors when you are not using the vehicle.**
- **Closing the tailgate without observing and ensuring it is clear could cause serious injury to you and to third parties. Make sure that no one is in the path of the tailgate.**
- **Never drive with the tailgate open or half-closed, exhaust gases may penetrate into the interior of the vehicle. Danger of poisoning!**
- **If you only open the tailgate, do not leave the key inside. The vehicle will not be opened if the key is left inside.** ■

Emergency opening

This allows the vehicle to be opened if the central locking does not operate (for example, if the battery is flat)

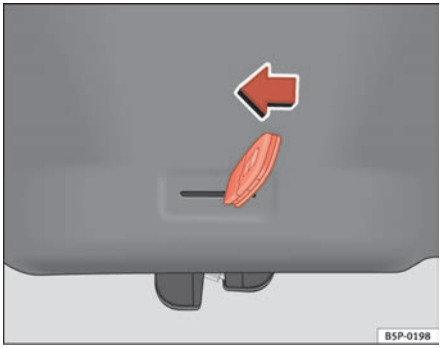

Fig. 46 Tailgate: emergency open

There is a groove in the boot allowing access to the emergency opening mechanism.

Opening the tailgate from inside the luggage compartment

– Insert the key bit in the groove and unlock the locking system, turning the key from right to left, as shown by the arrow ⇒ fig. 46. ■

Windows

Opening or closing the windows electrically*

All electric windows can be operated using the controls on the driver door.

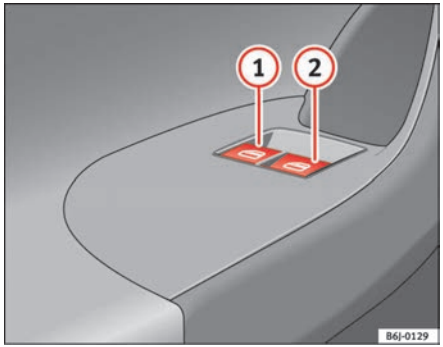

Fig. 47 Detail of driver door: controls for the front windows.

Opening and closing the windows

– Press the button to open a window.

– Pull button to close a window ⇒ ⚠.

Always close the windows fully if you park the vehicle or leave it unattended ⇒ ⚠.

You can use the electric windows for approx. 10 minutes after switching off the ignition if neither the driver door nor the front passenger door has been opened and the key has not been removed from the ignition.

Buttons on the driver's door

(1) Button for window in front left door

(2) Button for window in front right door

⚠ WARNING

- **Incorrect use of the electric windows can result in injury.**
- **Never close the tailgate without observing and ensuring it is clear, to do otherwise could cause serious injury to you and third parties. Make sure that no one is in the path of a window.**
- **Always take the vehicle key with you when you leave the vehicle.**
- **Never leave children or disabled persons in the vehicle, particularly if they have access to the keys. The misuse of the keys, for example, by children, may result in serious injury and accident.**
- **The engine may accidentally be started and be out of control.**
- **If the ignition is switched on, the electric equipment could be activated with risk of injury, for example, in the electric windows.**
- **The doors can be locked using the remote control key. This could make the aid difficult in an emergency situation.**
- **Always take the key with you when you leave the vehicle.**
- **The electric windows are only deactivated on switching the ignition off and opening any of the doors.**

Note

If the window is not able to close because it is stiff or because of an obstruction, the window will automatically open again ⇒ page 84. If this happens, check why the window could not be closed before attempting to close it again. ■

One-touch opening and closing*

One-touch opening and closing means you do not have to hold down the button.

The buttons ⇒ page 83, fig. 47 (1) and (2) have two posiitons for opening the windows and two for closing them. This makes it easier to open and close windows to the desired position.

One-touch closing

– Pull up the window button briefly up to the second position. The window closes fully.

One-touch opening

– Push down the window button briefly up to the second position. The window opens fully.

Restoring one-touch opening and closing

– The automatic open and close function will not work if the battery has been temporarily disconnected. The function can be restored as follows:

– Close the window as far as it will go by lifting and holding the window switch.

– Release the switch and then lift it again for one second. This will reactivate the automatic function.

If you push (or pull) a button to the first stage, the window will open (or close) until you release the button. If you push or lift the button briefly to the second stage, the window will open (one-touch opening) or close (one-touch closing) automatically. If you operate the button while the window is opening or closing, it stops at this position.

The one-touch opening and closing function will not function once the ignition has been switched off.

The one-touch function and roll-back function will not work if there is a malfunction in the electric windows. Contact an Authorised Service Centre. ■

Roll-back function

The roll-back function reduces the risk of injury when the electric windows close.

- If a window is obstructed when closing automatically, the window stops at this point and lowers immediately ⇒ ⚠.
- Next, check why the window does not close before attempting it again.
- If you try within the following 10 seconds and the window closes again with difficulty or there is an obstruction, the automatic closing will stop working for 10 seconds.
- If the window is still obstructed, the window will stop at this point.
- If there is no obvious reason why the window cannot be closed, try to close it again by pulling the tab within ten seconds. The window closes with great force **The roll-back function is deactivated.**

If more than 10 seconds pass, the window will open fully when you operate one of the buttons. One-touch closing is reactivated.

The one-touch function and roll-back function will not work if there is a malfunction in the electric windows. Contact an Authorised Service Centre.

⚠ WARNING

- **Incorrect use of the electric windows can result in injury.**

WARNING (continued)

- **Always take the key with you when leaving the vehicle, even if you only intend to be gone for a short time. Please ensure that children are never left alone inside the vehicle.**
- **The electric windows will work until the ignition has been switched off and one of the front doors has been opened.**
- **Closing the windows without observing and ensuring it is clear could cause serious injury to you and third parties. Make sure that no one is in the path of a window.**
- **Never allow people to remain in the vehicle when you close the vehicle from the outside. The windows cannot be opened even in an emergency.**
- **The roll-back function does not prevent fingers or other parts of the body getting pinched against the window frame and cause injury.** ■

Convenience opening and closing*

Using the door lock

– Hold the key in the door lock of the driver door in either the locking or the unlocking position until all windows are either opened or closed.

– Release the key to interrupt this function.

Using the remote control

– Keep the locking/unlocking button pressed for the electrical window risers to open/close; if you stop pressing the button, the window raising/lowering function is stopped.

– If the automatic raising is stopped and immediately after, the opering button is kept pressed, the window risers will lower.

– Once the windows are completely closed, the indicators will flash. ■

Panoramic tilting roof*

Opening and closing the sliding/tilting roof

The sliding/tilting roof is opened and closed using the switch when the ignition is switched on.

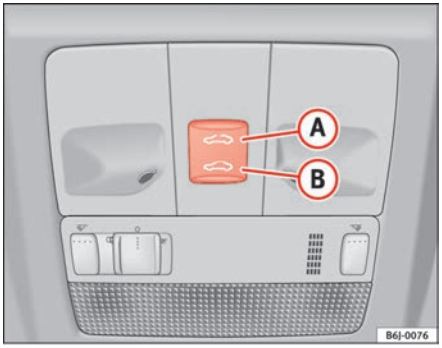

Fig. 48 Panoramic/tilting sunroof

Closing the panoramic/tilting sunroof

– Press and keep pressed down the button (B) ⇒ fig. 48 ⇒ ⚠, the roof starts to close until the button is released. ▶

Opening the panoramic/tilting sunroof

– Press and keep pressed down button (A). The roof starts opening until the button is released.

Automatic closing of the panoramic/tilting sunroof

– Press button (B) once only; the roof starts closing automatically until it is completely closed.

Automatic opening of the panoramic/ tilting sunroof

– Press button (A) once only. The roof starts opening automatically until it is completely open.

Restoring one-touch opening and closing

– Close the roof manually until it is completely closed. Release the button

– Press the closing button again, keeping it pressed down, until a complete opening and closing cycle has taken place.

Always close the panoramic/ tilting roof fully if you park the vehicle or leave it unattended ⇒ ⚠.

The tilting roof can be operated for up to about ten minutes after the ignition has been switched off, provided the driver door and the front passenger door are not opened.

Sunroof blind

The sunroof blind is opened and closed manually (independently of the sliding/ tilting roof).

⚠ WARNING

- **Incorrect use of the tilting roof can result in injury.**

⚠ WARNING (continued)

- **Never close the tilting sunroof without observing and ensuring it is clear to do, otherwise it may cause serious injury to you and others. Make sure that no one is in the path of the tilting roof.**
- **Always take the vehicle key with you when you leave the vehicle.**
- **Never leave children or disabled persons in the vehicle, particularly if they have access to the keys. Unsupervised use of a key could mean that the engine is started or that electrical equipment is used (e.g. electric tilting sunroof) with a risk of accident. The doors can be locked using the remote control key. This could make the aid difficult in an emergency situation.**
- **The tilting sunroof continues to function until one of the front doors is opened and the key removed from the ignition.**
- **Ensure that no object and/or end is between the glass and the roof when the one-touch opening/closing function is reset.** ■

Convenience closing*

Using the door lock

– Hold the key in the door lock of the driver's door in the locking position until the tilting sunroof is closed.

– Release the key to interrupt this function.

Using the remote control

– Push the lock button on the remote control for about 3 seconds. The tilting roof closes.

– Press the unlock button to interrupt the function. ■

Roll-back function of the panoramic/ tilting roof*

The panoramic/ tilting roof has a *roll-back function* which prevents larger objects getting trapped when the roof is closed. The roll-back function does not prevent fingers getting pinched against the roof opening. The tilting sunroof stops and opens again immediately if it is obstructed when closing. ■

Operation in case of breakdown

In case of a breakdown, the sunroof may be closed manually.

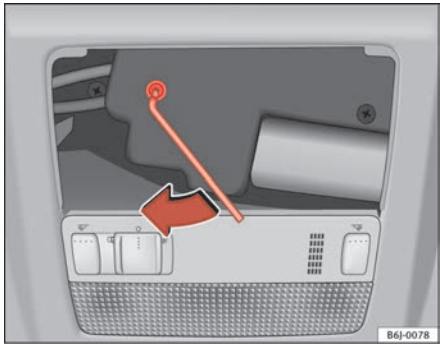

Fig. 49 Emergency operation of the panoramic/ tilting roof

– Remove the plastic cover by inserting a screwdriver into the rear section.

– Insert an Allen key (4 mm) into the opening to the end and close the sliding roof. ■

Lights and visibility

Lights

Switching lights on and off

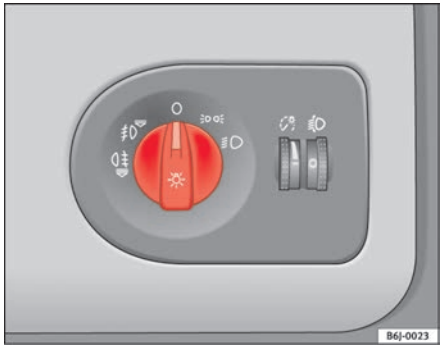

Fig. 50 Detailed view of dash panel: lights, fog light and rear fog light control

Switching on the side lights

– Turn the light switch ⇒ fig. 50 to position ≣D.

Switching on dipped headlights

– Turn the light switch to position ≣D.

Switching off the lights

– Turn the light switch to position 0.

Switching on the front fog lights*

– Turn the switch from position ≣D or ≣D to the first stop and pull it. The symbol ≣D in the light switch lights up.

Switching on the rear fog light (vehicles with front fog lights)

– Turn the switch from position ≣D or ≣D to the first stop and pull it ⇒ ⚠. A warning lamp placed in the warning and control lamp panel lights up.

Switching on the rear fog light (vehicles with no front fog lights)

– Turn the light control to the end from position ≣D or ≣D and pull it. A warning lamp placed in the warning and control lamp panel lights up.

⚠ WARNING

Never drive with just the side lights on. Risk of accident. The side lights are not bright enough to illuminate the road ahead and to ensure that other road users are able to see you. Always use your dipped headlights if it is dark or if visibility is poor.

Note

- The dipped beam headlights will only work with the ignition on. The side lights come on automatically when the ignition is turned off.

- If the lights are left on after the key has been taken out of the ignition lock, a buzzer will sound while the driver door remains open. This is a reminder to switch the lights off.
- The rear fog light is so bright that it can dazzle drivers behind you. You should use the rear fog light only when visibility is very poor.
- The use of the lighting described here is subject to the relevant statutory requirements. ■

Instrument and switch lighting / Headlight range control

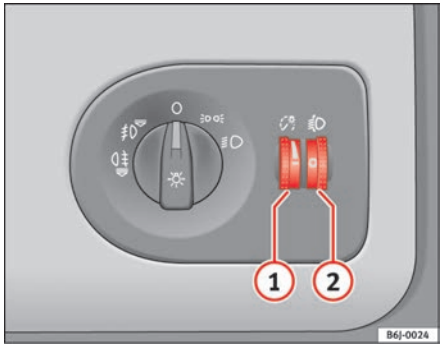

Fig. 51 Instrument panel: regulation for instrument and switch illumination and headlight range control

Instrument and switch lighting (1)

When the headlights are switched on, the brightness of the instruments and switch lighting can be regulated to suit your requirements by turning the thumb wheel ⇒ fig. 51 (1).

Those vehicles fitted with xenon gas discharge headlights are fitted with an automatic headlight range system.

Headlight range control (2)

By using the electrical headlight range control, (2) you can adjust the headlight range to the load level that is being carried in the vehicle. This way, it is possible to avoid dazzling oncoming traffic more than necessary. At the same time, by using the correct headlight settings, the driver has the best possible lighting for the road ahead.

The headlights can only be adjusted when the dipped beam is switched on. To lower the beam, turn the thumb wheel down (2) from the basic setting **0**.

Dynamic headlight range control

Vehicles with **gas discharge lamps** (xenon lamps) **are equipped with dynamic headlight range control**. When you switch on the lights, their range regulates itself according to the vehicle load.

Vehicles with gas discharge lamps do not have headlight range control. ■

Daylight driving lights*

Daylight driving lights light up automatically when the ignition is switched on (only with AFS headlamps)

Daylight driving lights switch off automatically when the street lighting comes on.

Note

See legal requirements for each country. ■

Self directional headlights*

When driving around bends, the headlights will light the most important areas of the road.

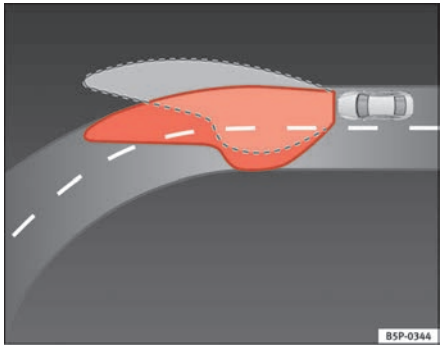

Fig. 52 Cornering lighting using self-directional headlights

This cornering light gives better illumination of the side of the road and the corner area. The dynamic lighting is controlled automatically according to speed and the steering wheel angle.

The two main headlights move at different angles to avoid that the front of the vehicle is left completely in the dark.

Note

The system operates from a speed of about 10 km/h. ■

Cornering light*

This is an additional light source to dipped headlights to light up the road as a bend is taken.

The cornering light operates with the lights switched on and when driving at less than 40 Km/h. They light up when the steering wheel is turned or the flashers are operated.

Forward gear

- If the steering wheel is turned to the right, or the right-hand indicator operated, the right-hand headlamp lights up.
- If the steering wheel is turned to the left, or the left-hand flasher operated, the left-hand headlamp lights up.

In reverse gear both headlamps light up.

Note

When the fog lamps are on, the cornering function is activated and both headlamps are continuously on. ■

Coming home function*

When it is dark, the area around the car is lit up with the aid of the coming home / leaving home function.

To activate the function

– Remove key from ignition switch.

– Switch the light off.

– Open the driver door. ▶

– Push the light lever to the main beam position ≡D.

– Dipped headlights come on when the door is opened.

You have 2 mins. from when the key is taken out of the ignition switch to when the lights flash; after this, the Coming home function will not activate. To activate it again, repeat the operation.

When the system is activated, dipped headlights remain on for 30 secs. after closing the door. If the door is open for more than 3 mins., the system will not remain active after the 3 mins., which means that the dipped lights will not light up.

Note

- If the vehicle is often used during the night for short trips and the Coming home function is used, the battery will considerably discharge. To avoid this, make longer journeys whenever possible.
- Observe all relevant statutory requirements when using the lighting systems described here. ■

Rear window heating

Fig. 53 Centre console: heated rear window switch

The rear window heating only works when the engine is running. When it is switched on, a lamp lights up on the switch.

After approx. 8 minutes, the heating device of the rear window switches off automatically.

For the sake of the environment

The rear window heater should be disconnected as soon as the glass is demisted. By saving electrical power you can also save fuel.

Note

To avoid possible damage to the battery, an automatic temporary disconnection of this function is possible, coming back on when normal operating conditions are reestablished. ■

Hazard warning lights ⚠

The hazard warning lights are used to draw the attention of other road users to your vehicle in emergencies.

Fig. 54 Centre console: switch for hazard warning lights

If your vehicle breaks down:

1. Park your vehicle at a safe distance from moving traffic.
2. Press the button to switch on the hazard warning lights ⇒ ⚠.
3. Switch the engine off.
4. Apply the handbrake.
5. On a manual gearbox engage 1st gear, and for an automatic move the selector lever to **P**.
6. Use the warning triangle to draw the attention of other road users to your vehicle.
7. Always take the vehicle key with you when you leave the vehicle.

You should switch on the hazard warning lights to warn other road users, for instance when:

- reaching the tail end of a traffic jam,
- there is an emergency
- your vehicle breaks down due to a technical fault,
- you are towing another vehicle or your vehicle is being towed.

All turn signals flash simultaneously when the hazard warning lights are switched on. That is that the two turn signal indicator lamps ⇦ ⇨ and the indicator lamp in the switch ⚠ will flash at the same time. The hazard warning lights also work when the ignition is switched off.

WARNING

- **The risk of an accident increases if your vehicle breaks down. Always use the hazard warning lights and a warning triangle to draw the attention of other road users to your stationary vehicle.**
- **Never park where the catalytic converter could come into contact with inflammable materials under the vehicle, for example dry grass or spilt petrol. This could start a fire!**

Note

- The battery will run down if the hazard warning lights are left on for a long time, even if the ignition is switched off.
- The use of the hazard warning lights described here is subject to the relevant statutory requirements. ■

Turn signal and main beam headlight lever

The turn signal and main beam lever also operates the parking lights and the headlight flasher.

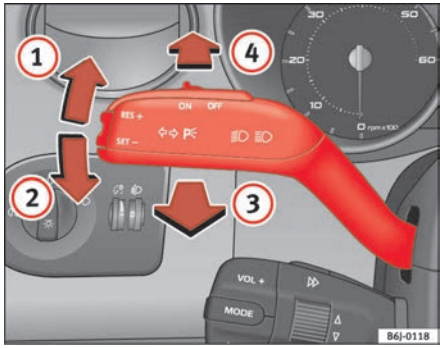

Fig. 55 Indicator and main beam headlight lever

The turn signal and main beam headlight lever has the following functions:

Switching on the turn signals

– Move the lever all the way up ⇒ fig. 55 (1) to indicate **right**, and all the way down (2) to indicate **left**.

Signalling a lane change

– Push the lever up (1) or down (2) to the point where you incur resistance and then release it. The turn signal will flash several times. The corresponding warning lamp will also flash.

Switching main beam on and off

– Turn the light switch to position ≡D.

– Press the lever forward ⇒ fig. 55 (4) to switch on the main beams.

– Pull the lever back towards you to switch the main beam headlights off again.

Headlight flashers

– Pull the lever towards the steering wheel (3) to operate the flasher.

Switching on parking lights

– Switch the ignition off and remove the key from the lock.

– Move the lever up or down to turn the right or left-hand parking lights on, respectively.

WARNING

The main beam can dazzle other drivers. Risk of accident! Never use the main beam headlights or the headlight flasher if they could dazzle other drivers.

Note

- The *turn signals* only work when the ignition is switched on. The corresponding warning lamp ⇦ or ⇨ flashes in the combi-instrument. The warning lamp ⇦⇨ flashes when the indicators are operated, provided a trailer is correctly attached and connected to the vehicle. If a turn signal bulb is defective, the warning lamp flashes at double speed. If the trailer turn signal bulbs are damaged, warning lamp ⇦⇨ does not light up. Change the bulb. ▶

- The *main beam headlights* can only be switched on if the dipped beam headlights are already on. The warning lamp ≡D then comes on in the combi-instrument.
- The *headlight flasher* comes on for as long as you pull the lever – even if no other lights are switched on. The warning lamp ≡D then comes on in the combi-instrument.
- When the *parking lights* are switched on, the headlight and the rear light on the corresponding side of the vehicle light up. The parking lights will only work if the key is removed from the ignition. If the lights are switched on, a **buzzer** gives an audible warning while the driver door is open.
- If the turn signal lever is left on after the key has been taken out of the ignition lock, an acoustic signal sounds when the driver door is opened. This is a reminder to switch off the turn signal, unless of course you wish to leave the parking light on. ■

Interior lights

Front interior light

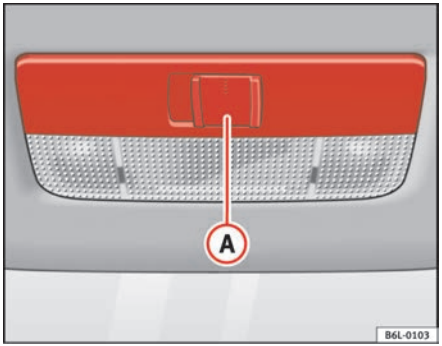

Fig. 56 Interior roof trim: front interior lights

The switch (A) ⇒ fig. 56 is used to select the following positions:

Courtesy light position

Sliding switch in central position The interior lights are automatically switched on when the vehicle is unlocked or the key removed from the ignition lock And turn off approx. 20 seconds after closing the doors. The interior lights are switched off when the vehicle is locked or when the ignition is switched on.

Interior light switched on

Move the knob to the position .

Interior light switched off O

Move the knob to the position O ⇒ fig. 56.

Note

If not all the vehicle doors are closed, the interior lights will be switched off after approx. 10 minutes, providing the key has been removed and the courtesy light position selected. This prevents the battery from discharging. ■

Front reading light*

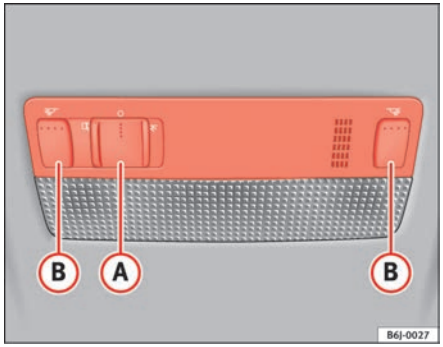

Fig. 57 Front reading light

Switching on the reading light

Press the corresponding button (B) ⇒ fig. 57 to switch on the reading light.

Switching the reading lights off

Press the corresponding button to switch the reading light off. ■

Boot light*

The light is activated when the tailgate is open, even when the ignition and lights are turned off. For this reason, ensure that the tailgate is always closed. ■

Visibility

Sun visors

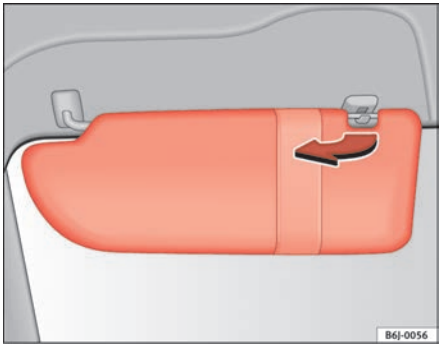

Fig. 58 Sun visor on the driver side

The sun visors for the driver and the front passenger can be pulled out of their mountings in the centre of the vehicle and turned towards the doors ⇒ fig. 58.

The driver's sun visor has compartments for cards, and the passenger sun visor has a vanity mirror with a cover*. ■

Windscreen washers

Front windscreen wipers

The windscreen wiper lever controls the windscreen wipers and the automatic wash and wipe.

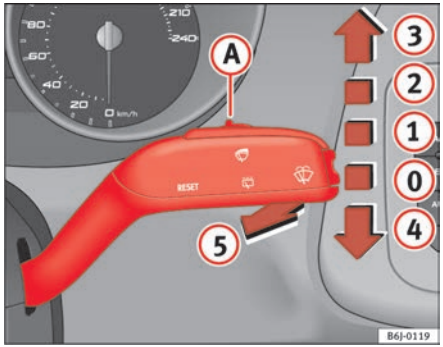

Fig. 59 Windscreen wiper and windscreen wash lever

The windscreen wiper lever ⇒ fig. 59 has the following positions:

Switching off the wipers

– Move the lever to position (0).

Intermittent wipe

– Move the lever up to position (1).

– Move the control (A) to the left or right to set the length of the intervals. Control to the left: long intervals; control to the right: short intervals. Four wiper interval stages can be set using switch (A).

Slow wipe

– Move the lever up to position (2).

Continuous wipe

– Move the lever up to position (3).

Brief wipe

– Move the lever down to position (4) to give the windscreen a *brief* wipe.

Wash and wipe automatic system

– Pull the lever towards the steering wheel - Position (5), the windscreen washer is activated.

– Release the lever. The wipers-washers will keep running for approximately four seconds.

The windscreen will be wiped again after approximately five seconds once the wipe/wash system has been operated.

WARNING

- **Worn and dirty wiper blades obstruct visibility and reduce safety levels.**
- **In cold conditions, you should not use the wash / wipe system unless you have warmed the windscreen with the heating and ventilation system. The washer fluid could otherwise freeze on the windscreen and obscure your view of the road.**

WARNING (continued)

- **Always note the corresponding warnings on ⇒ page 191.**

Caution

In icy conditions, always check that the wiper blades are not frozen to the glass before using the wipers for the first time. If you switch on the wipers when the wiper blades are frozen to the windscreen, you could damage both the wiper blades and the wiper motor.

Note

- The windscreen wipers will only work when the ignition is switched on.
- The heat output of the heated jets* is controlled automatically when the ignition is switched on, depending upon the outside temperature.
- In certain versions of vehicles with alarms, the windscreen wiper will only work when the ignition is on and the bonnet closed.
- When the intermittent wipe function is on, the intervals are directly proportional to the speed. This way, the higher the vehicle speed the shorter the intervals. ■

Rain sensor*

The rain sensor controls the frequency of the windscreen wiper intervals, depending on the amount of rain.

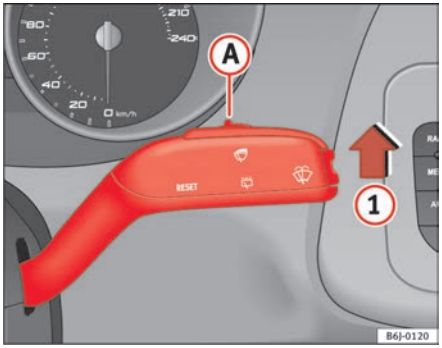

Fig. 60 Windscreen wiper lever

Switching on the rain sensor

– Move the windscreen wiper lever into position (1) ⇒ fig. 60.

– Move the control (A) to the left or right to set the sensitivity of the rain sensor. Control to the right: highly sensitive. Control to the left: less sensitive.

The rain sensor is part of the interval wipe function. You will have to switch the rain sensor back on if you switch off the ignition. This is done by switching the wiper intermittent function off and back on. ▶

Note

- Do not put stickers on the windscreen in front of the sensor. This may cause sensor disruption or faults. ■

Rear window wiper

The windscreen wiper lever operates the windscreen wiper and the wash and wipe system for the rear window.

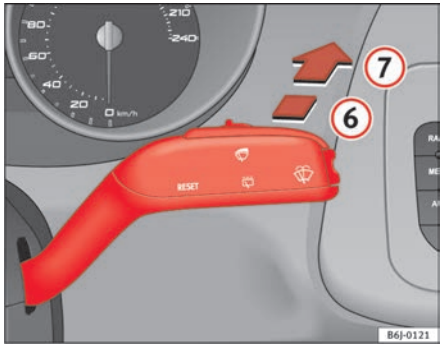

Fig. 61 Windscreen wiper and windscreen wash lever: rear window wiper

Switching on the interval wipe

– Press the lever forwards to position (6) ⇒ fig. 61. The wiper will wipe the window approximately every 6 seconds.

Switching off the interval wipe function

– Pull the lever back from position (6) towards the steering wheel. The wiper will continue to function for a short period if you switch off whilst the wipers are in motion.

Switching on the windscreen wiper and washer system

– Press the lever fully forwards to position (7) ⇒ fig. 61. The rear wiper and washer operate at the same time. The windscreen wash system will function as long as you hold the lever in this position.

– Release the lever. The washer system stops and the wipers continue until the end of the cycle.

– Move the lever towards the steering wheel to switch off.

WARNING

- **A worn or dirty wiper blade will obstruct visibility and reduce safety.**
- **Always note the corresponding warnings on ⇒ page 191.**

Caution

In icy conditions, always check that the wiper blade is not frozen to the glass before using the wiper for the first time. If you switch on the wiper when the wiper blade is frozen to the glass, this could damage both the wiper blade and the wiper motor.

Note

- The rear window wiper will only work when the ignition is switched on.
- Depending on the version of the model, when you engage reverse gear and with the headlight wiper activated, the lamps are wiped. ■

Headlight washer system

The headlight washers clean the headlight lenses.

The headlight washers are activated automatically when the windscreen washer is used and the windscreen wiper lever is pulled towards the steering wheel for at least 1.5 seconds – provided the dipped headlights or main beams are switched on. Clean off stubborn dirt (insects, etc.) from the headlights at regular intervals, for instance when filling the fuel tank.

Note

- To ensure that the headlight washers work properly in winter, keep the nozzle holders in the bumper free of snow and remove any ice with a de-icer spray.
- To remove water, the windscreen wipers will be activated from time to time, the headlight wipers will be activated every three cycles. ■

Rearview mirrors

Adjusting the head restraints

Before beginning any journey, adjust the rear-view mirrors for correct visibility. ■

Interior mirror

It is dangerous to drive if you cannot see clearly through the rear window.

Manual anti-dazzle function for interior mirror

In the basic mirror position, the lever at the bottom edge of the mirror should be at the front. Pull the lever to the back to select the anti-dazzle function. ■

Automatic anti-dazzle interior mirror*

The automatic anti-dazzle function can be switched on and off as desired.

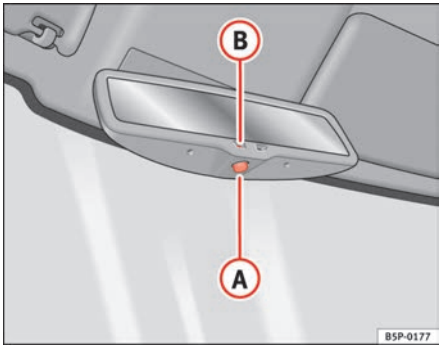

Fig. 62 Automatic anti-dazzle interior mirror.

Switching off anti-dazzle function

– Press button (A) ⇒ fig. 62. Warning lamp (B) goes out: ▶

Switching on anti-dazzle function

– Press button (A) ⇒ page 99, fig. 62. Warning lamp is lit.

Anti-dazzle function

The anti-dazzle function is activated every time the ignition is switched on. The green indicator lamp lights up in the mirror housing.

When the anti-dazzle function is activated the interior mirror will darken **automatically** according to the amount of light it receives (for example from the headlights of a vehicle behind). The anti-dazzle function is cancelled if reverse gear is engaged.

Note

- The automatic anti-dazzle function will only work properly if the sun blind* for the rear window is retracted and there are no other objects preventing light from reaching the interior mirror.
- If you have to stick any type of sticker on the windscreen, do not do so in front of the sensors. Doing so could prevent the anti-dazzle function from working well or even from working at all. ■

Folding in the wing mirrors

The wing mirrors of the vehicle may be folded in. For this, press the mirror housing towards the vehicle.

Note

Before washing the vehicle with an automatic car wash, fold in the mirrors to avoid damage. ■

Electric wing mirrors*

The exterior mirrors can be adjusted using the rotary knob in the driver's door.

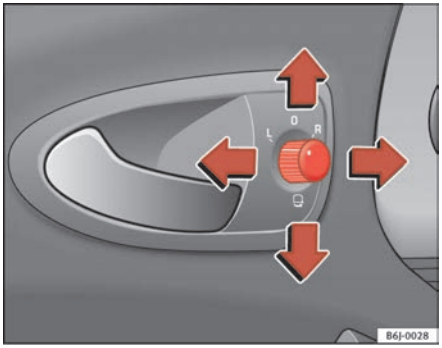

Fig. 63 Controls of exterior mirrors

Basic setting of exterior mirrors

1. Turn knob ⇒ fig. 63 to position **L** (**left exterior mirror**).
2. Turn the rotary knob to position the mirror so that you have a good view to the rear of the vehicle.
3. Turn knob to position **R** (**right exterior mirror**).
4. Swivel the rotary knob to position the mirror so that you have a good view to the rear of the car ⇒ ⚠.

Heated exterior mirrors*

– Press the demisting button ⇒ page 91, fig. 53 ▶

– The mirrors demist for some minutes to prevent draining the battery.

– If necessary, press the button again to repeat the function.

Folding in exterior mirrors*

– Turn the control ⇒ page 100, fig. 63 to position to fold in the exterior mirrors. You should always fold in the exterior mirrors if you are driving through an automatic car wash. This will help prevent damage.

Folding exterior mirrors back out to the extended position*

– Turn the knob to position L or R to fold the exterior mirrors back out ⇒ ⚠.

WARNING

- **The rear view convex or aspheric mirror increase the field of vision however the objects appear smaller and further away in the mirrors. If you use these mirrors to estimate the distance to vehicles behind you when changing lane, you could make a mistake. Risk of accident.**
- **If possible, use the interior mirror to estimate distances to vehicles behind you.**
- **Make sure that you do not get your finger trapped between the mirror and the mirror base when folding back the mirrors. Risk of injury!**

For the sake of the environment

The exterior mirror heating should be switched off when it is no longer needed. Otherwise, it is an unnecessary fuel waste.

Note

- If the electrical adjustment ever fails to operate, the mirrors can be adjusted by hand by lightly pressing the edge of the mirror glass.
- In vehicles with electric wing mirrors, the following points should be observed: if, due to an external force (e.g. a knock while manoeuvring), the adjustment of the mirror housing is altered, the mirror will have to be completely folded **electrically**. Do not readjust the mirror housing by hand, as this will interfere with the mirror adjuster function.
- The rear view mirrors can be adjusted separately or simultaneously, as described before. ■

Seats and stowage

The importance of correct seat adjustment

Proper seat adjustment optimises the level of protection offered by seat belts and airbags.

Your vehicle has **five** seats, two on the front part and three on the rear part. Each seat is equipped with a three-point seat belt.

The driver seat and the front passenger seat can be adjusted in many ways to suit the physical requirements of the vehicle occupants. The correct seat position is very important for:

- a fast and easy operation of all controls on the instrument panel,
- a relaxed posture which does not cause drowsiness,
- a safe driving ⇒ page 7,
- ensuring that the seat belts and airbag system provide maximum protection ⇒ page 16.

WARNING

- **If the driver and passengers assume improper sitting positions, they may sustain critical injuries.**
- **More people than available seats must never be transported in your vehicle.**
- **Every passenger in the vehicle must properly fasten and wear the seat belt belonging to his or her seat. Children must be protected with an appropriate child restraint system ⇒ page 40, “Child safety”.**
- **The front seats and all head restraints must always be adjusted to body size and the seat belt must always be properly adjusted to provide you and your passengers with optimum protection.**

WARNING (continued)

- **Always keep your feet on the foot well when the vehicle is moving; never rest them on the dash panel, out of the window or on the seat. This is also applied to passengers. An incorrect sitting position exposes you to an increased risk of injury in case of a sudden braking or an accident. If the airbag is triggered, you could sustain severe injuries due to an incorrect sitting position.**
- **It is important for the driver and front passenger to keep a distance of at least 25 cm from the steering wheel or dash panel. Failure to respect the minimum distance means that the airbag will not protect you. Risk of fatal injury. The distance between the driver and the steering wheel or between the front passenger and the dash panel should always be as great as possible.**
- **Adjust the driver or front passenger seat only when the vehicle is stationary. Otherwise, your seat could move unexpectedly while the vehicle is moving. This could increase the risk of an accident and therefore, injury. In addition, while adjusting your seat, you will assume an incorrect sitting position. Risk of fatal accidents.**
- **Special guidelines apply to installing a child seat on the front passenger seat. When installing a child seat, observe the warning note in the ⇒ page 40, “Child safety”.** ■

Head restraints

Correct adjustment of head restraints

Properly adjusted head restraints are an important part of passengers protection and can reduce the risk of injuries in most accident situations.

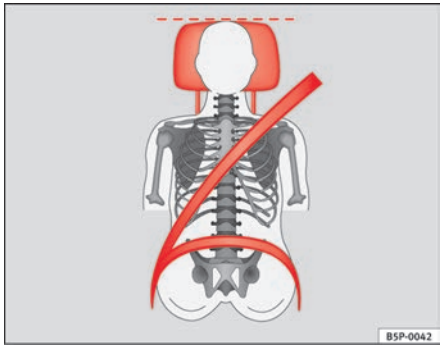

Fig. 64 Front view: head restraints and seat belts correctly adjusted

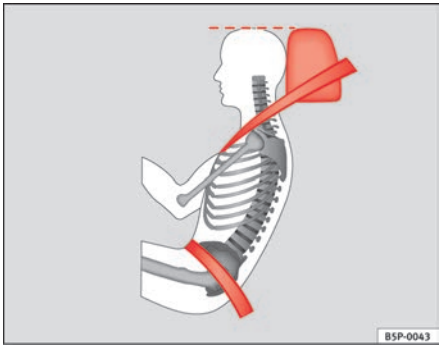

Fig. 65 Side view: head restraints and seat belts correctly adjusted

– Adjust the head restraint so that its upper edge is at the same level as the top of your head, or as close as possible to the same level as the top of your head and, as a very minimum at eye level ⇒ fig. 64 and ⇒ fig. 65.

Adjusting the head restraints ⇒ page 104

WARNING

- **Travelling with the head restraints removed or improperly adjusted increases the risk of severe injuries.**
- **Improperly adjusted head restraints could lead to death in the event of a collision or accident.**
- **Incorrectly adjusted head restraints also increase the risk of injury during sudden or unexpected driving or braking manoeuvres.**
- **The head restraints must always be adjusted according to the passenger's height.** ■

Removing or adjusting head restraints

The head restraints can be adjusted by moving them up and down.

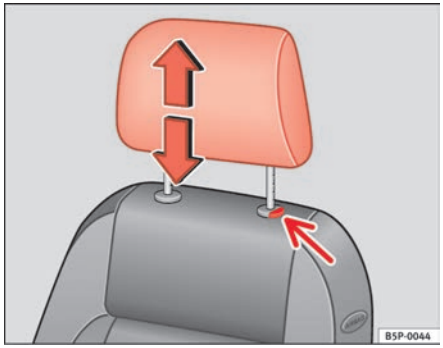

Fig. 66 Adjusting and removing the head restraints

Adjusting height (front seats)

– Press the button on the side and pull upwards to the desired position.

– To lower the head restraint, press the button and push head restraint downwards.

– Make sure that it engages securely into position.

Adjusting height (rear seats)

– Press the button on the side and pull upwards to the desired position.

– To lower the head restraint, press the button and push head restraint downwards.

– Make sure that the head restraint engages securely in one of its positions. ⇒ page 13

Removing the head restraint

– Push the head restraint up as far as it will go.

– Press the button ⇒ fig. 66 (arrow).

– Pull head restraint out of fitting without releasing the button.

Fitting the head restraint

– Insert the head restraint into the guides on the rear backrest.

– Push head restraint down.

– Adjust the head rest to suit passenger's height ⇒ page 12

WARNING

- **Never drive if the head restraints have been removed. Risk of injury.**
- **Never drive if the head restraints are in an unsuitable position, there is a risk of serious injury.**
- **After refitting the head restraint, you must always adjust it properly for height to achieve optimal protection.**
- **Please observe the safety warnings ⇒ page 103, “Correct adjustment of head restraints”.**

Note

- To fit and remove the rear head restraints, gently tilt the seat backrest forwards.

- When fitting the head restraints again, insert the tubes as far as possible into the guides without pressing the button. ■

Front seats

Adjustment of the front seats

Fig. 67 Front left seat controls

(1) Adjusting the seat forwards and backwards

– Pull up the grip and move the seat forwards or backwards.

– Then release the grip (1) and move the seat further until the catch engages.

(2) Adjusting the seat height

– Pull the lever up or push down (several times if necessary) from its home position. This adjusts the seat height in stages.

(3) Adjusting the backrest angle

– Take your weight off the backrest and turn the hand wheel.

(4) To fold and unfold the seat back* (for two-door vehicles without the Easy - Entry* function)

– To **fold** the seat back down, pull the lever (1) upwards, in the direction of the arrow and push the seat back forwards.

– To **unfold** the seatback, push it back.

(4) Folding and unfolding the seat back* (for two-door vehicles without the Easy - Entry* function)

– To **fold** the seat back down, pull the lever (1) upwards, in the direction of the arrow and push the seat back forwards. You can push the seat forwards at the same time to make entry to the rear seats easier.

– To **unfold** the seat back, first move the seat **completely** back.

The Easy-Entry function facilitates the access to the vehicle rear seats. Before lifting the seat back, return the seat to the original position. The seat inserts when the seat back is lifted.

WARNING

- **Never adjust the driver or front passenger seat while the vehicle is in motion. While adjusting your seat, you will assume an incorrect sitting position. Risk of fatal accidents. Adjust the driver or front passenger seat only when the vehicle is stationary.**
- **To reduce the risk of injury to the driver and front passenger in case of a sudden braking or an accident, never drive with the backrest tilted towards the rear. The maximum protection of the seat belt can be achieved only when the backrests are in an upright position and the driver and front**

WARNING (continued)

passenger have properly adjusted their seat belts. The further the backrests are tilted to the rear, the greater the risk of injury due to improper positioning of the belt web!

- **Exercise caution when securing the seat height into forwards/backwards position. Injuries can be caused if the backrest is tilted without due care and attention.** ■

Heated seats*

The front seat cushions and backrests can be heated electrically.

Fig. 68 Front seats heating switch

– Press the corresponding switch ⇒ fig. 68 to switch on the seat heating.

– Press once to connect the heating at a maximum force. The two leds illuminate. ⇒ fig. 68. After 15 min. of high intensity, the upper led turns off, the system is deactivated for 2 min. and after 2 min., it works again at low intensity (lower led is always turned on).

– Press the switch again to set the heating to minimum force. (The lower led illuminates)

– To disconnect the heating, press the switch again.

Caution

To avoid damaging the heating elements, please do not kneel on the seat or apply sharp pressure at a single point to the seat cushion and backrest. ■

Rear seat bench

Folding down rear seats

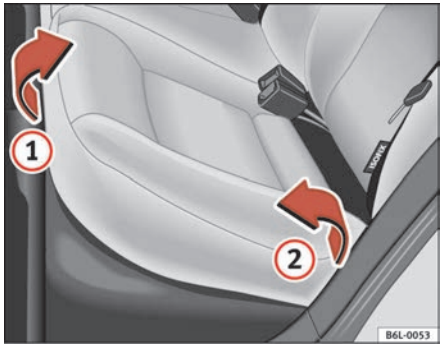

Fig. 69 Folding up the rear seat cushion

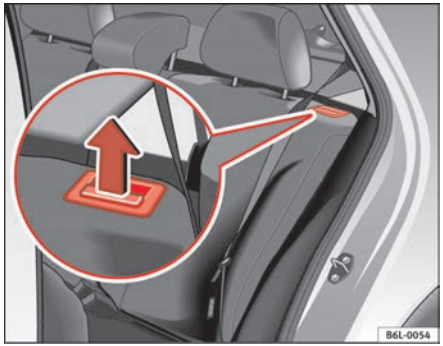

Fig. 70 Button for unlocking the rear back-rest

Folding seat down

– Remove the head restraint ⇒ page 104.

– Pull the front edge of the seat cushion ⇒ fig. 69 (1) upwards in the direction of the arrow.

– Lift the cushion (2) forwards in the direction of the arrow.

– Pull the release button ⇒ fig. 70 in the direction of the arrow and fold the backrest forwards

– Insert the head restraints in their corresponding fastenings.

Folding seat forward

– Remove the head restraints from their fastening on the seat cushion.

– Lift the backrest until it correctly engages in the catches.

– Once the backrest is locked, pull on the central seat belt to check that the backrest has engaged properly in position.

– Check that the position lever is in neutral position.

– Replace the rear head restraints ⇒ page 104.

– Lower the cushion and push it backwards below the seat belt buckles.

– Press the front part of the cushion downwards.

On split rear seats [9] the backrest and cushion can be lowered and raised respectively in two sections.

[9] Optional equipment

WARNING

- Please be careful when folding back the backrest! Injuries can be caused if the backrest is tilted without due care and attention.
- Do no trap or damage seat belts when raising the backrest.
- After raising the backrest, check it has engaged properly in position. Do this by pulling on the central seat belt and checking that the position lever is in the neutral position.
- The three point automatic seat belt only works correctly when the backrest of the central seat is correctly engaged. ■

Stowage compartments

Stowage compartment on the front passenger side

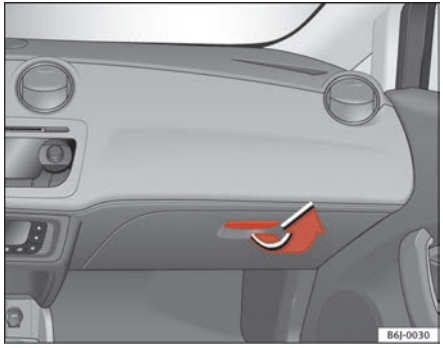

Fig. 71 Passenger side: stowage compartment

The compartment can be opened by pulling the lever ⇒ fig. 71.

WARNING

Always keep the stowage compartment cover closed while the vehicle is in motion in order to reduce the risk of injury caused by a sudden braking or by an accident. ■

Object compartment, driver's side

There is an object compartment on the driver's side

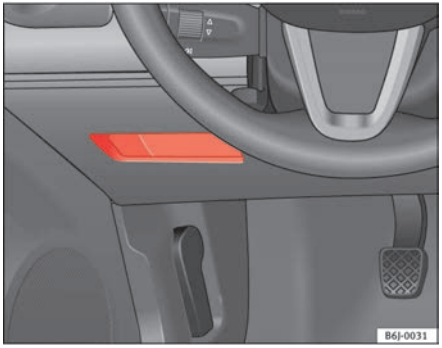

Fig. 72 Driver's side compartment

Mounting bracket for navigator in instrument panel*

Your vehicle can be equipped with a portable navigator mounting bracket.

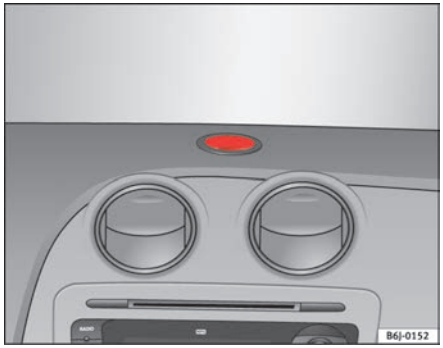

Fig. 73 Mounting bracket for navigator in instrument panel.

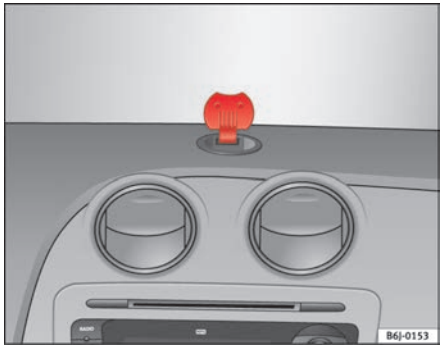

Fig. 74 Bracket with open cover for placing the navigator.

It is necessary to use a specific adapter for each navigator, so consult your Technical Service. This bracket provides supply to your portable navigator. ■

Object compartment under front seats *

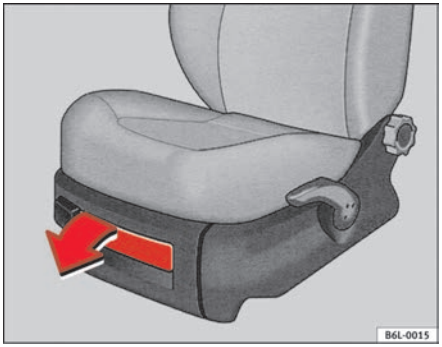

Fig. 75 Stowage compartment under the front passenger seat

To open

– Press button and pull outwards, holding it with a hand.

To close

– Press inwards until it engages.

Note

The stowage drawer will hold a maximum weight of 1.5 kg. ■

Seat storage pocket*

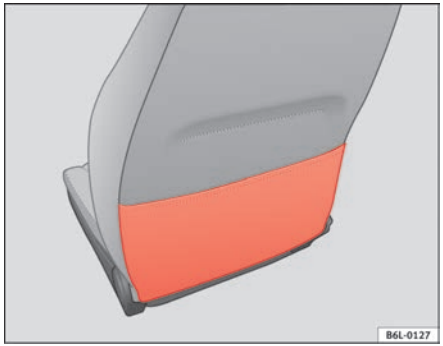

Fig. 76 Seat storage pocket

There is a storage pocket on the rear of the front seats. ■

Front cup holder*

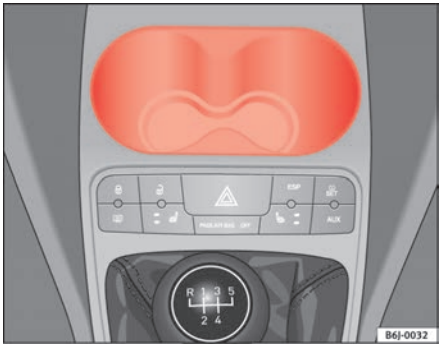

Fig. 77 Front cup holder in the centre console

In the centre console, in front of the gear lever, there are two drink holders ⇒ fig. 77.

WARNING

- **Never place hot drinks in the drink holders. During normal or sudden driving manoeuvres, sudden braking or an accident, the hot drink could be spilled. Danger of scalding.**
- **Never use rigid materials (for example, glass or ceramic), these could cause injury in the case of an accident.**
- **When travelling the drinks holder should always be closed to prevent risk in the event of sudden breaking or accident.** ■

Rear cup holder*

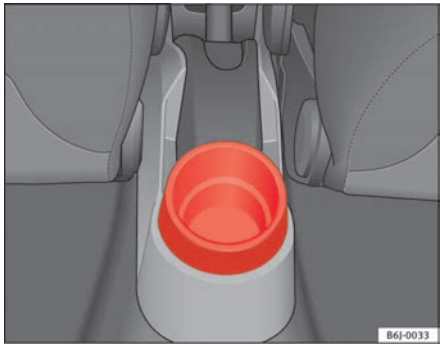

Fig. 78 Cupholder in the centre console

On the rear part of the centre console, behind the hand brake, there is a cup holder installed* ⇒ fig. 78. ■

Ashtrays, cigarette lighter and power point

Front ashtray

Fig. 79 Front ashtray

Opening and closing the ashtray

– To open the ashtray, lift the cover ⇒ fig. 79

– To close it, lower the cover

Emptying the ashtray

– Extract the ashtray and empty it.

WARNING

Never put paper in the ashtray. Hot ash could ignite the paper in the ashtray and cause a fire. ■

Cigarette lighter

Fig. 80 Lighter

– Press on the cigarette lighter ⇒ fig. 80 to activate it ⇒ ⚠.

– Wait for the lighter to pop out slightly.

– Pull out the cigarette lighter and light the cigarette on the glowing coil.

⚠ WARNING

- **Improper use of the cigarette lighter can lead to serious injuries or start a fire.**
- **Using the lighter carefully. Carelessness or negligence when using the cigarette lighter can cause burns, risk of injury.**
- **The lighter only works when the ignition is turned on or the engine is running. To avoid the risk of fire, never leave children alone inside the vehicle.** ■

Electrical power points

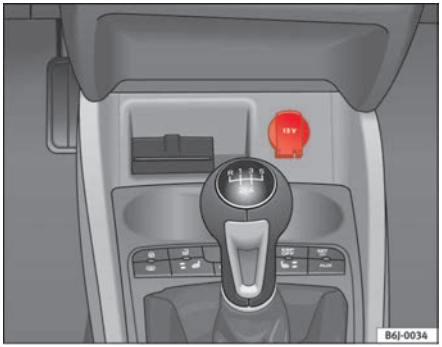

Fig. 81 Front power point

The 12 Volt cigarette lighter power point can also be used for other electrical components with a power rating of up to 120 Watt. When the engine is switched off, however, the vehicle battery will discharge. Further information ⇒ page 173.

⚠ WARNING

The current power points and the connected accessories will only operate when the ignition is on or when the engine is running. Improper use of the sockets or electrical accessories can lead to serious injuries or cause a fire. To avoid the risk of injury, never leave children alone inside the vehicle.

Note

- The use of electrical appliances with the engine switched off will cause a battery discharge. ▶

- Before using any electrical accessories, see the instructions on ⇒ page 173. ■

Auxiliary audio input connection (AUX)*

Fig. 82 AUX connection on the central console (depending on the equipment)

– Lift the AUX. cover. ⇒ fig. 82

– Insert the pin fully. (See the radio manual) ■

AUX-USB* Input connection

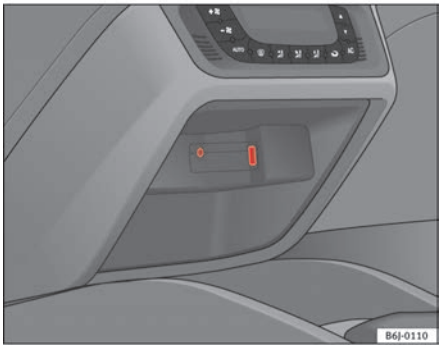

Fig. 83 AUX /USB* input connection (depending on the equipment)

For information concerning the use of this equipment, please see the Radio handbook. ■

First-aid kit, warning triangle, fire extinguisher*

First-aid kit, warning triangle and fire extinguisher

The use of reflective warning triangles is obligatory in emergencies in some countries. As are the first aid kit and a set of spare light bulbs.

The first-aid kit and the fire extinguisher are located in the luggage compartment, held in place by Velcro. ▶

The warning triangle may be located in the rear of the boot secured by rubber bands.

Note

- The first aid kit, the warning triangles and the fire extinguisher are not supplied with the vehicle as standard.
- The first aid kit, the warning triangles and the fire extinguisher should meet legal requirements.
- The expiry date of the content of the first aid kit should be checked.
- Ensure that the fire extinguisher is fully functional. The fire extinguisher should, therefore, be checked regularly. The sticker on the fire extinguisher will inform you of the next date for checking.
- Before acquiring accessories and emergency equipment see the instructions on ⇒ page 173, “Accessories, parts replacement and modifications”. ■

Boot

Stowing luggage

All luggage must be securely stowed.

Please observe the following points to ensure the vehicle handles well at all times:

– Distribute the load as evenly as possible.

– Place heavy objects as far forward in the luggage compartment as possible.

WARNING

- **Loose luggage and other loose items in the vehicle may cause serious injuries.**
- **Loose objects in the luggage compartment can suddenly move and change the way the vehicle handles.**
- **In case of sudden manoeuvres or accidents, loose objects in the passenger compartment can be flung forward, injuring passengers.**
- **Always put objects in the boot.**
- **When you transport heavy objects, always take in account that a change in the centre of gravity can also cause changes in vehicle handling.**
- **Please observe information on safe driving ⇒ page 7, “Safe driving”.**

Caution

Hard objects on the shelf could chafe against the wires of the heating element in the rear window and cause damage.

Note

The ventilation slots in front of the rear side windows must not be covered as this would prevent stale air being extracted from the vehicle. ■

Open stowage compartment

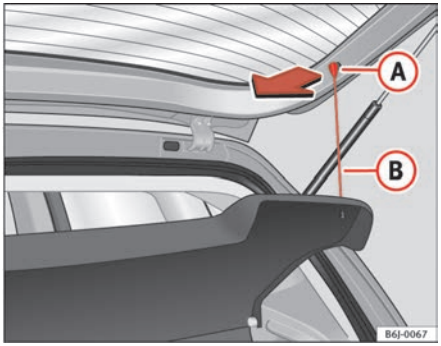

Fig. 84 Stowage tray

Removing the cover

– Disengage the loops ⇒ fig. 84 (B) from the retaining pins (A)

– Extract the cover from its slot, in its rest position and pull outwards.

WARNING

Do not place heavy or hard objects on the open stowage compartment, because they will endanger the vehicle occupants in case of sudden braking.

Caution

- Before closing the tailgate, ensure that the stowage compartment tray is correctly fitted.
- An overloaded boot could mean that the rear stowage tray is not correctly seated and it may be bent or damaged.
- If the boot is overloaded, remove the tray.

Note

- Ensure that, when placing items of clothing on the luggage compartment cover, rear visibility is not reduced. ■

Roof carrier*

Please observe the following points if you intend to carry loads on the roof:

- For safety reasons, only luggage racks and accessories approved by SEAT should be used.
- It is essential that you follow the assembly instructions included with the bars exactly, being especially careful to position front and rear luggage compartment cover bars on the special housings on the longitudinal bars. You must also respect their position according to the direction of travel indicated in the assembly manual. Not following these instructions may damage the bodywork.
- Pay special attention to the tightening torque of the attachment bolts and check them following a short journey. If necessary, retighten the bolts and check them at regular intervals.
- Distribute the load evenly. A maximum load of 40 kg only is permitted for each roof carrier system support bar, the load must be distributed evenly along the entire length. However, the maximum load permitted for the entire roof (including the support system) of 75 kg must not be exceeded nor should the total weight of the vehicle be exceeded. See the chapter on “Technical Data”.
- When transporting heavy or large objects on the roof, any change in the normal vehicle behaviour due to a change in the centre of gravity or an ▶

increased wind resistance must be taken into account. For this reason, a suitable speed and driving style must be used.

- For those vehicles fitted with a sunroof*, ensure that it does not interfere with the load on the roof carrier system when opened. ■

Heating, Ventilation and Air conditioning

Heating

Controls

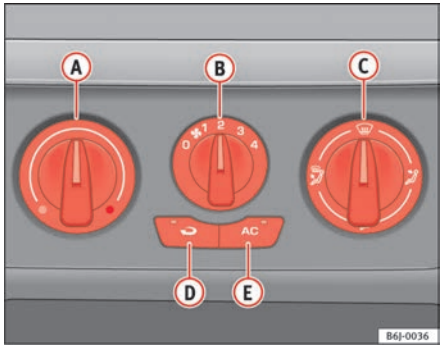

Fig. 85 Vehicle heating controls on the dash panel

– Using the controls ⇒ fig. 85 (A) and (C) and with the switch (B) you can adjust the temperature, the air distribution and the blower speed.

– Press the button (D) to switch air recirculation mode on or off. When the function is activated, a warning light on the button is turned on.

Temperature

Switch (A) adjusts temperature. The required temperature inside the vehicle cannot be lower than the ambient temperature. Maximum heat output, which is needed to defrost the windows quickly, is only available when the engine has reached its operating temperature.

Blower

The air flow can be set at four speeds with switch (B). The blower should always be set at the lowest speed when driving slowly.

Air distribution

Control (C) for setting the flow of air in the required direction.

– Air distribution towards the windscreen in order to demist. For safety reasons, **it is not recommended** to switch air recirculation on.

– Air distribution to the upper body.

– Air distribution to footwell

– Air distribution to the windscreen and the footwell.

Air recirculation mode

Air recirculation mode (D) on (a lamp lights up in red) prevents strong odours from the outside air from entering in the vehicle, for example when passing through a tunnel or in a traffic jam ⇒ ⚠.

When the outside temperature is low, air recirculation mode improves heating performance by heating air from the interior instead of cold air from the outside.

WARNING

- **For your safety, the windows should never be fogged up or covered with snow or ice. This is essential to ensure good visibility. Please familiarise yourself with the correct operation of the heating and ventilation system, including the demist/defrost functions for the windows.**

WARNING (continued)

- **In air recirculation mode, no cold air from the outside enters the vehicle interior. The windows can quickly fog over if the heating is switched off. Therefore, never leave the air recirculation mode switched on for a long time (risk of accident).**

Note

- Please consider the general notes ⇒ page 126. ■

Vehicle ventilation or heating

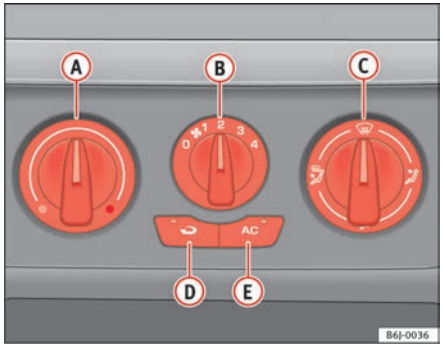

Fig. 86 Heating controls on the dash panel

Ventilating the passenger compartment

– Turn the temperature selector ⇒ fig. 86 (A) anti-clockwise.

– Turn blower switch (B) to any of the head settings 1 -4.

– Set the airflow to the desired direction using air distribution control (C).

– Open the relevant air outlets.

Interior heating

– Turn the temperature selector ⇒ fig. 86 (A) clockwise to select the desired temperature.

– Turn blower switch (B) to any of the head settings 1 -4.

– Set the airflow to the desired direction using air distribution control (C).

– Open the relevant air outlets.

Defrosting the windscreen

– Turn the temperature selector ⇒ fig. 86 (A) clockwise to reach the maximum temperature.

– Turn the blower switch (B) to setting 4.

– Turn air distribution control to ⊞.

– Close outlet (3).

– Open and turn outlet (4) towards side windows

Keeping the windscreen and the side windows demisted

– Turn the temperature selector ⇒ fig. 86 (A) to the heating zone.

– Turn blower switch (B) to any of the head settings 2 -3.

– Turn air distribution control to ⊞.

– Close outlets (3)

– Open and turn outlets (4) towards side windows

Once the windows are demisted and as a preventive measure, the control (C) can be set in position, thus obtaining greater comfort while preventing the windows from misting again.

Heating

Maximum heat output, which is needed to defrost the windows quickly, is only available when the engine has reached its operating temperature.

Note

Remember that the temperature of the engine coolant should be optimum to ensure that the heating system functions correctly (except in vehicles fitted with additional heating*) ■

Air outlets

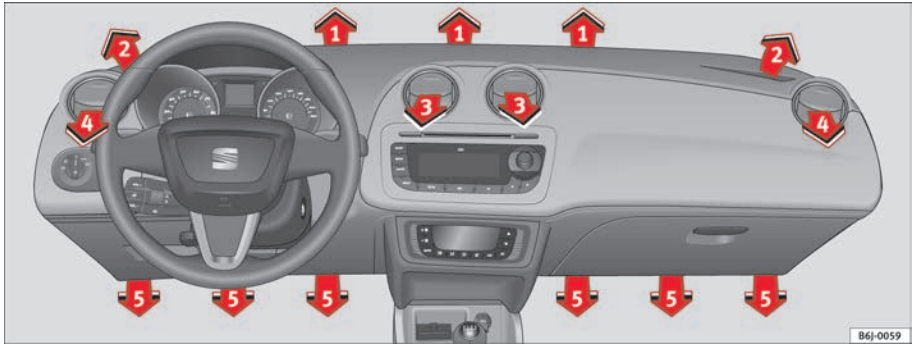

Fig. 87 Air vent

Air distribution (C)

Switch on symbol	Main air output through outlets:
	1,2
	5
	1, 2, 5
	3, 4

The outlets (3) and (4) can be closed or opened separately and the air flow directed according to our need. ■

Air conditioning*

Controls

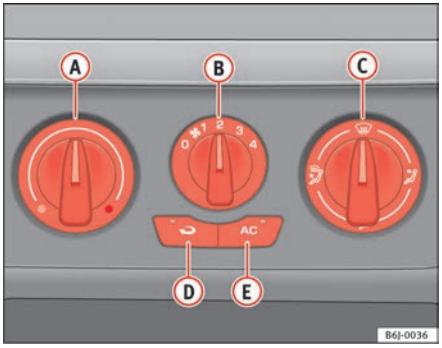

Fig. 88 Air conditioning controls on the instrument panel

The air conditioning system only works when the engine is running and the fan is switched on.

– Using the controls ⇒ fig. 88 (A) and (C) and with the switch (B) you can adjust the temperature, the air distribution and the blower speed.

– To switch a function on or off, press the appropriate button (D) or (E). When the function is activated, a red warning light on the button is turned on.

– **To demist the wind screens:**

– Turn air distribution to ▶

– Turn the fan control to one of the two levels depending on the speed required.

– Rotate the temperature control to the desired level of comfort.

– Close outlets (3)

– Open and turn outlets (4) towards side windows

(A) Temperature selector ⇒ page 121
(B) Blower control. There are four speed settings for the blower. At low speed, it is recommended to set the blower to a minimum of 1 to improve the intake of fresh air.
(C) Air distribution control ⇒ page 121
(D) Air recirculation button ⇒ page 122
(E) Button AC – Coolant on button ⇒ page 121

WARNING

For your safety, the windows should never be fogged up or covered with snow or ice. This is essential to ensure good visibility. Please familiarise yourself with the correct operation of the heating and ventilation system, including the demist/defrost functions for the windows.

Note

Please consider the general notes. ■

Vehicle interior heating or cooling system

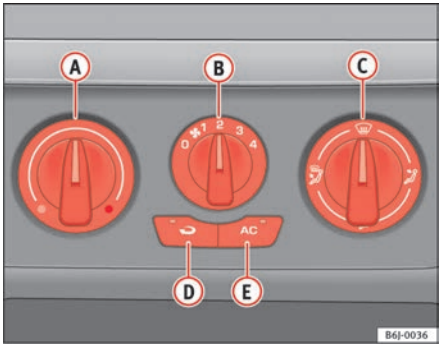

Fig. 89 Air conditioning controls on the instrument panel

Interior heating

– Disconnect the cooling system using button ⇒ fig. 89 AC (the button light turns off).

– Turn the temperature selector (A) to set the desired temperature inside the vehicle.

– Turn the blower switch to any of of the settings 1-4.

– Set the air distribution control (C) to the air flow configuration desired: (towards the windscreen), (towards the chest), (towards the footwell) and (towards the windscreen and footwell areas).

Interior cooling

– Connect the cooling system with button AC (the button light *should* light up).

– Turn the temperature control switch until the desired interior temperature is reached.

– Turn the blower switch to any of of the settings 1-4.

– Set the air distribution control to the air flow configuration desired: (towards the windscreen), (towards the chest), (towards the footwell) and (towards the windscreen and footwell areas).

Heating

Maximum heat output, which is needed to defrost the windows quickly, is only available when the engine has reached its operating temperature.

Coolant system

When the air conditioning is switched on, the temperature and the air humidity go down. This way, if the outside humidity is extreme, the air conditioning prevents the misting of the windows and therefore, comfort is improved.

If the air conditioning does not work, this may be due to the following reasons:

- The engine is stationary.
- The fan blower is switched off.
- The outside temperature is below +3 ?.
- The cooling system compressor has been temporarily switched off because of an increased engine coolant temperature.
- The air conditioning fuse is faulty.
- Another fault in the vehicle. Have the air conditioning checked by a qualified workshop. ■

Air recirculation

Air recirculation mode prevents fumes or unpleasant smells from coming from the outside.

When air recirculation mode is switched on (button ⇒ page 121, fig. 89 with warning lamp) strong odours in the outside air do not enter the vehicle interior, for example when passing through a tunnel or in a traffic jam.

When the outside temperature is low, air recirculation mode improves heating performance by heating air from the interior instead of cold air from the outside.

When the outside temperature is high, air recirculation mode improves cooling performance by cooling air from the interior instead of warm air from outside.

For safety reasons, it is **not recommended** to switch air recirculation on when the air distribution control is being adjusted to the windscreen setting .

WARNING

In air recirculation mode, no cold air from the outside enters the vehicle interior. If the air conditioning system is switched off, the windows can quickly mist over. Therefore, never leave the air recirculation mode switched on for a long time (risk of accident).

Note

- When engaging reverse gear, the air recirculation is connected automatically to prevent the entrance of exhaust fumes in the vehicle on travelling backwards. The control light on the button does not light up.
- If the temperature control is turned to the coldest setting (blue point) and the switch AC is activated, the “Air recirculation” function is automatically activated in order to cool the vehicle rapidly using less energy; its function indicator will light. ▶

- If the function is not deactivated by pressing the button, this will deactivate after approx. 20 min. ■

Economic use of the air conditioning

When the air conditioning is switched on, the compressor consumes engine power and has influence on fuel consumption. Consider the following points in order to have the system operating in the minimum possible time.

- If the vehicle interior has overheated due to an excessive solar radiation, it is best to open the windows or doors to allow the hot air to escape.
- While in motion, the air conditioning should not be switched on if the windows or the sunroof are open.* ■

Climatronic

Control switches

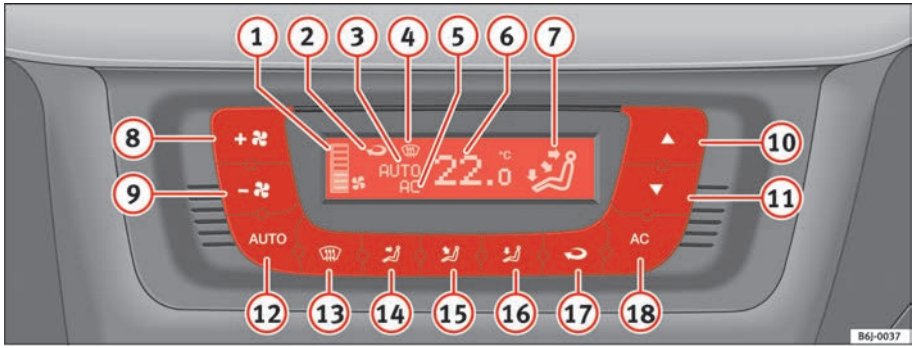

Fig. 90 Climatronic controls on the instrument panel

The air conditioning system only works when the engine is running and the blower is switched on. ▶

– Turn the temperature selector ⇒ page 123, fig. 90 (10) to adjust the desired temperature.

– The functions will be switched on when its buttons are pressed. When the function is activated, a symbol is displayed on the screen. Press the button again to switch off the function.

(1) Blower level indicator.
(2) Air recirculation display:
(3) Display **AUTO** (Automatic operation)
(4) Demisting indicator
(5) AC indicator (Cooling connected)
(6) Interior temperature indicator selected
(7) Air flow direction indicator
(8) Fan speed increase
(9) Fan speed decrease
(10) Interior temperature increase
(11) Interior temperature decrease
(12) Button AUTO – Automatic adjustment of temperature, ventilation and air distribution control
(13) Button – Windscreen demisting function. The air drawn in is directed at the windscreen. The air recirculation mode will be switched off as soon as the demisting function is switched on. At temperatures over 3°C, the cooling system is switched on automatically in order to dry the air.
(14) Button – Air distribution to head area
(15) Button – Air distribution to the upper body.
(16) Button – Air distribution to footwell
(17) – Manual air recirculation
(18) AC button - To switch on the air conditioning.

WARNING

For your safety, the windows should never be fogged up or covered with snow or ice. This is essential to ensure good visibility. Please familiarise yourself with the correct operation of the heating and ventilation system, including the demist/defrost functions for the windows.

Note

Please consider the general notes. ■

Automatic mode

In automatic mode air temperature, air flow and distribution are automatically regulated so that a specified temperature is attained as quickly as possible, and then maintained.

Switching on automatic mode

– Press the button AUTO. The indication ⇒ page 123, fig. 90 (7) is visible.

– Turn the temperature selector to adjust the desired temperature inside the vehicle. We recommend 22°C (72°F).

A comfortable interior climate is quickly reached when a temperature of +22°C (72°F) is set in automatic mode. Therefore, we recommend you not to change this adjustment, except as necessary to suit individual preferences or particular circumstances. It is possible to select interior temperatures from +18°C (64°F) up to +29°C (86°F). If a lower or higher temperature is selected, **LO** or **HI** are respectively displayed on the screen. These are approximate temperatures which may slightly vary depending on the outside conditions. ▶

Climatronic maintains a constant temperature. To do it, it automatically regulates the supplied air temperature, the blower speed and the air distribution. The system also considers the sunlight radiation, so there is no need for manual readjustment. Therefore, **automatic mode** almost always provides the best comfort for the vehicle occupants throughout the year.

Automatic mode is switched off whenever an adjustment is made using the buttons for the air distribution, blower or AC. The temperature continues to self-regulate. ■

Manual mode

In manual mode the air temperature, flow, and the desired air distribution can be adjusted.

Switching on manual mode

– Press one of the buttons ⇒ page 123, fig. 90 (14) to (16) or press the blower control (8) and (9) down. The indicator is switched off (3).

Temperature

It is possible to select interior temperatures from +18°C (64°F) up to +29°C (86°F). These are approximate temperatures which may slightly vary depending on the outside conditions.

If a temperature below 18°C (64°F) is selected, the screen will show **LO**. In this setting the system runs at maximum cooling output and the temperature is not regulated.

If a temperature above 29°C (86°F) is selected, the screen will show **HI**. In this setting the system runs at maximum heating output and the temperature is not controlled.

Blower

The blower can be adjusted with (8) and (9) ⇒ page 123, fig. 90 buttons. If the blower is off (level (1) is not shown on the screen) and button (9) is kept pressed down, the Climatronic switches off. Then **OFF** is displayed on the screen.

Air distribution

The air distribution is adjusted using the buttons , , and . It is also possible to open and close some of the air outlets separately.

Switching the air conditioning system on and off

Pressing the button AC the air cooling system can be switched off in order to save fuel. The temperature continues to self-regulate. The set temperature can then only be reached if it is higher than the outside temperature. ■

Air recirculation mode

Air recirculation mode prevents fumes or unpleasant smells from coming from the outside.

– Press the button to switch air recirculation mode on or off. This is ON if the symbol ⇒ page 123, fig. 90 is displayed on the screen.

Air recirculation mode prevents strong odours in the ambient air from entering the vehicle interior, for example when passing through a tunnel or in a traffic jam.

When the outside temperature is low, air recirculation mode improves heating performance by heating air from the interior instead of cold air from the outside. ▶

When the outside temperature is high, air recirculation mode improves cooling performance by cooling air from the interior instead of warm air from outside.

For safety reasons, it is **not recommended** to switch air recirculation on when the air distribution control is being adjusted to the windscreen setting.

WARNING

In air recirculation mode, no cold air from the outside enters the vehicle interior. If the air conditioning system is switched off, the windows can quickly mist over. Therefore, never leave the air recirculation mode switched on for a long time (risk of accident).

Note

When engaging reverse gear, the air recirculation is connected automatically to prevent the entrance of exhaust fumes in the vehicle on travelling backwards. In this case the symbol for air recirculation is not displayed. ■

General notes

The impurity filter

The impurity filter (a combined particle filter and active carbon filter) serves as a barrier against impurities in the ambient air, including dust and pollen.

For the air conditioning system to work with maximum efficiency, the pollen filter must be replaced at the specified intervals in the Maintenance Program.

If the filter loses efficiency prematurely due to use in areas reaching very high pollution levels, the pollen filter must be changed more frequently than stated in the Service Schedule.

Caution

- If you suspect that the air conditioning is damaged, switch it off with button AC to prevent further damage and have it checked by a qualified workshop.
- Repairs to the air conditioning system require specialist knowledge and special tools. Therefore, we recommend you to take the vehicle to a qualified workshop.

Note

- If the humidity and temperature outside the vehicle are high, **condensation** can drip off the evaporator in the cooling system and so forming a puddle underneath the vehicle. This is completely normal and there is no need to suspect a leak.
- Keep the air intake slots in front of the windscreen free of snow, ice and leaves to ensure heating and cooling are not impaired, and to prevent the windows from misting over.
- The air from the vents flows through the vehicle interior and is extracted by slots designed for this purpose. Therefore, do not cover these slots with items of clothing or other objects.
- The air conditioning system operates most effectively with the windows and the sliding/tilting roof* closed. However, if the vehicle has been overheated by sun, the air inside can be cooled quicklier by opening the windows for a short time.
- Do not smoke while air recirculation mode is on, as smoke drawn into the air conditioning system leaves a residue on the evaporator, producing a permanent unpleasant odour.
- At low outside temperatures the compressor switches off automatically. The AUTO button cannot be switched on either.
- It is advisable to connect the air conditioning at least once a month, to lubricate the system gaskets and prevent leaks. If a decrease in the cooling capacity is detected, an Authorised Service Centre should be consulted to check the system. ▶

- For the system to function properly, the grilles on both sides of the screen must not be obstructed
- When the engine is under extreme strain, switch off the compressor for a moment. ■

Driving

Address

Adjusting the steering wheel position

The height and reach of the steering wheel can be freely adjusted to suit the driver.

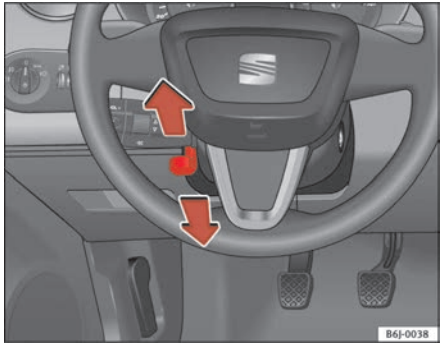

Fig. 91 Steering column height adjustment

– Adjust the driver seat to the correct position.

– Push the lever under the steering column ⇒ fig. 91 down ⇒ ⚠.

– Adjust the steering wheel until the correct position is set ⇒ fig. 91.

– Then push the lever up again firmly ⇒ ⚠.

⚠ WARNING

- **Incorrect use of the steering column adjustment function and an incorrect seating position can result in serious injury.**
- **To avoid accidents, the steering column should be adjusted only when the vehicle is stationary.**
- **Adjust the driver seat or steering wheel so that there is a distance of at least 25 cm between the steering wheel and your chest ⇒ fig. 91. If you fail to observe the minimum distance, the airbag will not protect you. Risk of fatal injury.**
- **If your physical constitution does not allow you to mantain the minimum distance of 25 cm, contact an Authorised Service Centre. The Authorised Service Centre will help you to decide if special specific modifications are necessary.**
- **If you adjust the steering wheel so that it points towards your face, the driver airbag will not protect you properly in the event of an accident. Make sure that the steering wheel points towards your chest.**
- **When driving, always hold the steering wheel with both hands on the outside of the ring at the 9 o'clock and 3 o'clock positions. Never hold the steering wheel at the 12 o'clock position, or in any other manner (e.g. in the centre of the steering wheel, or on the inside of the rim). In such cases, you could receive severe injuries to the arms, hands and head.** ■

Safety

Electronic stabilisation programme (ESP)*

ESP helps make driving safer in certain situations.

Fig. 92 Detail of the centre console: ESP button

The Electronic Stabilisation Program (ESP) contains the electronic differential lock (EDL) and the traction control system (TCS). The ESP function works together with the ABS. Both warning lamps will light up if the ESP or ABS systems are faulty.

The ESP is started automatically when the engine is started.

The ESP is always active, and cannot be switched off. With the ESP switch it is only possible to switch TCS off.

When does the warning lamp light up or flash ESP?

- On switching the ignition on, it lights up for about two seconds to carry out a function control.
- The warning lamp will start flashing when the vehicle is moving if the ESP or the TCS is activated. The warning lamp will light up slowly if the TCS is switched off.
- It will light up continuously if there is a malfunction in the ESP.

WARNING

- **The electronic stabilisation programme (ESP) cannot defy the laws of physics. This should be kept in mind, particularly on slippery and wet roads and when towing a trailer.**
- **Always adapt your driving style to suit the condition of the roads and the traffic situation. Do not let the extra safety afforded by ESP tempt you into taking any risks when driving, this can cause accidents.**
- **Please refer to the corresponding warning notes on ESP in ⇒ page 149, “Intelligent technology”.** ■

Ignition lock

Position of the ignition key

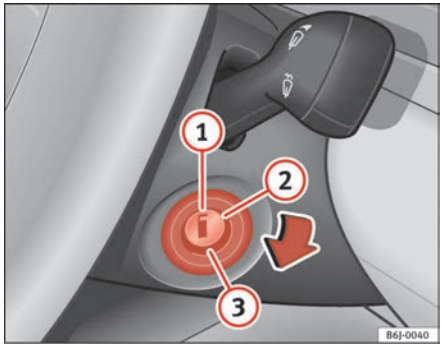

Fig. 93 Ignition key positions

Ignition switched off, steering lock (0)

In this position ⇒ fig. 93 the ignition and the engine are OFF and the steering may get locked.

For the **Steering lock** to operate without the ignition key, turn the steering wheel until it locks with an audible sound. You should always lock the steering wheel when you leave your vehicle. This will help prevent vehicle theft ⇒ ⚠.

Switching the ignition or the glow plug system on (1)

Turn the ignition key to this position and release it. If the key cannot be turned or it is difficult to turn from position (0) to position (1), move the steering wheel back and forth until it loosens up.

Starting (2)

The engine is started when the key is in this position. Electrical components with a high power consumption are switched off temporarily.

Every time the vehicle is started again, the ignition key must be turned to position (0). The **repetitive start prevention lock** of the ignition prevents possible damage to the starter motor if the engine is already running.

WARNING

- **The ignition key must NOT be removed from the lock until the vehicle comes to a standstill. Otherwise, the steering could be immediately blocked- Risk of accident!**
- **Always remove the key from the ignition lock when leaving the vehicle, even for a short period. This is especially important if children or disabled people are left alone in the vehicle. They could accidentally start the engine or work electrical equipment such as the electric windows, consequently resulting in an accident.**
- **Unsupervised use of the keys could start the engine or any electrical system, such as the electric window. This could result in serious injury.**

Caution

The starter motor will only work when the engine is stopped (ignition key position (2)). ■

Electronic immobiliser

The immobiliser prevents unauthorised persons from driving the vehicle.

Inside the key there is a chip that deactivates the electronic immobiliser automatically when the key is inserted into the ignition. ▶

The immobiliser will be activated again automatically as soon as you pull the key out of the ignition lock.

The engine can only be started using a genuine SEAT key with its correct code.

Note

A perfect operation of the vehicle is ensured if genuine SEAT keys are used. ■

Starting and stopping the engine

Starting petrol engines

The engine can only be started using a genuine SEAT key with its correct code.

– Move the gear lever to the neutral position and depress the clutch pedal thoroughly and hold it in this position for the starter to turn the engine on.

– Turn the ignition key to the starting ⇒ page 130 position.

– Let go of the ignition key as soon as the engine starts; the starter motor must not run on with the engine.

After starting a very hot engine, you may need to slightly press down the accelerator.

When starting a very cold engine, it may be a little noisy for the first few seconds until oil pressure has built up in the hydraulic valve compensators. This is quite normal, and no cause for concern.

If the engine does not start immediately, switch the starter off after 10 seconds and try again after half a minute. If the engine still does not start, the fuel pump fuse should be checked ⇒ page 211, “Fuses”.

WARNING

- **Never start or run the engine in unventilated or closed rooms. The exhaust fumes contain carbon monoxide, an odourless and colourless poisonous gas. Risk of fatal accidents. Carbon monoxide can cause loss of consciousness. It can also cause death.**
- **Never leave the vehicle unattended if the engine is running.**
- **Never use “cold start sprays”, they could explode or cause the engine to run at high revs. Risk of injury.**

Caution

- When the engine is cold, you should avoid high engine speeds, driving at full throttle and over-loading the engine. Risk of engine damage.
- The vehicle should not be pushed or towed more than 50 metres to start the engine. Unburnt fuel could enter the catalytic converter and damage it.
- Before attempting to push-start or tow a vehicle in order to start it, you should first try to start it using the battery of another vehicle. Note and follow the instructions ⇒ page 227, “Jump-starting”.

For the sake of the environment

Do not warm-up the engine by running the engine with the vehicle stationary. You should drive off as soon as you start the engine. This helps the engine reach operating temperature faster and reduces emissions. ■

Starting diesel engines

The engine can only be started using a genuine SEAT key with its correct code.

– Move the gear lever to the neutral position and depress the clutch pedal thoroughly and hold it in this position for the starter to turn the engine on.

– Turn the ignition key to the starting position.

– Turn the ignition key to position ⇒ page 130, fig. 93 (1). The indication lamp ⌇⌇ will light for engine pre-heating.

– When the warning lamp turns off, turn the key to position (2) to start the engine. Do not press the accelerator.

– Let go of the ignition key as soon as the engine starts, the starter motor must not be allowed to run on with the engine.

When starting a very cold engine, it may be a little noisy for the first few seconds until oil pressure has built up in the hydraulic valve compensators. This is quite normal, and no cause for concern.

If there are problems starting the engine, see the ⇒ page 227.

Glow plug system for the diesel engine

To avoid unnecessary discharging of the battery, do not use any other major electrical equipment while the glow plugs are pre-heating.

Start the engine as soon as the glow plug warning lamp turns off.

Starting the engine after the fuel tank has been completely run dry

If the fuel tank has been completely run dry, it may take longer than normal (up to one minute) to start the engine after refuelling with diesel fuel. This is because the system must eliminate air first.

WARNING

- **Never start or run the engine in unventilated or closed rooms. The exhaust fumes contain carbon monoxide, an odourless and colourless poisonous gas. Risk of fatal accidents. Carbon monoxide can cause loss of consciousness. It can also cause death.**
- **Never leave the vehicle unattended if the engine is running.**
- **Never use “cold start sprays”, they could explode or cause the engine to run at high revs. Risk of injury.**

Caution

- When the engine is cold, you should avoid high engine speeds, driving at full throttle and over-loading the engine. Risk of engine damage.
- The vehicle should not be pushed or towed more than 50 metres to start the engine. Unburnt fuel could enter the catalytic converter and damage it.
- Before attempting to push-start or tow a vehicle in order to start it, you should first try to start it using the battery of another vehicle. Note and follow the instructions ⇒ page 227, “Jump-starting”.

For the sake of the environment

Do not warm-up the engine by running the engine with the vehicle stationary. You should drive off as soon as you start the engine. This helps the engine reach operating temperature faster and reduces emissions. ■

Switching the engine off

– Stop the engine.

– Turn the ignition key to position ⇒ page 130, fig. 93 (0). ▶

After switching the engine off, the radiator fan may run on for up to 10 minutes. It is also possible that the fan turns itself on once more if the coolant temperature increases due to the heat accumulated in the engine compartment or due to its prolonged exposure to solar radiation.

WARNING

- **Never switch the engine off until the vehicle is completely stationary.**
- **The brake servo works only when the engine is running. With the engine switched off, more strength is needed to brake. As normal brake operation cannot be performed, risk of accidents and serious injury may exist.**
- **The steering lock can be immediately blocked once the key is removed from the ignition lock. The vehicle cannot be steered. Risk of accident.**

Caution

If the engine has been driven hard for a long period, the engine could overheat when it is switched off. Risk of engine damage. For this reason, you should idle the engine for approx. 2 minutes before you switch it off. ■

Manual gearbox

Driving a car with a manual gearbox

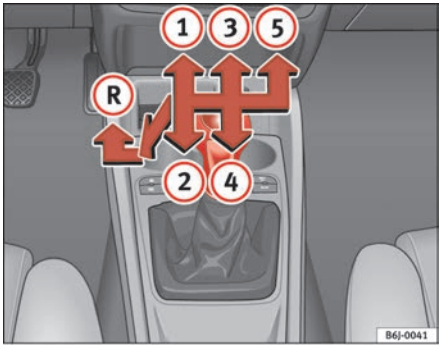

Fig. 94 Centre Console: gear shift pattern of a 5-speed manual gearbox

Engaging the reverse gear

– The vehicle should be stationary with the engine idling. Press the clutch down thoroughly.

– Place the gear lever into neutral and push the lever downwards.

– Slide the gear lever to the left, and then into the reverse position shown on the gear stick.

The reverse gear can only be engaged when the vehicle is stationary. When the engine is running and before engaging this gear, wait about 6 seconds with the clutch pressed down thoroughly in order to protect the gearbox.

The reverse lights light up when the reverse gear is selected and the ignition is on. ▶

WARNING

- **When the engine is running, the vehicle will start to move as soon as a gear is engaged and the clutch released.**
- **Never select the reverse gear when the vehicle is in motion. Risk of accident.**

Note

- Do not rest your hand on the gear rest when driving. The pressure of your hand could cause premature wear on the selector forks in the gearbox.
- When changing gear, you should always depress the clutch down fully to avoid unnecessary wear and damage.
- Do not hold the car "on the clutch" uphills. This causes premature wear and damage to the clutch. ■

Automatic gearbox*

Gearbox programmes

The automatic gearbox has got two gearbox programmes.

Fig. 95 Automatic gearbox

Selecting the normal programme

– Put the selector lever into position D.

Selecting the sport programme

– Put the selector lever into position S.

If you select the normal programme, **D**, you will drive in the economy mode, i.e. the programme is designed to reduce fuel consumption. The gearbox changes up into a higher gear as soon as possible and down into a lower gear as late as possible. ▶

If you select the sport programme, **S**, you will drive in a sporty mode, i.e. a programme in which shifts into high gears are postponed in order to use the full power of the engine. ■

Selector lever lock functions

The selector lever lock in position P or N prevents gears from being engaged inadvertently, which would cause the vehicle to move.

Fig. 96 Automatic gearbox

Fig. 97 Automatic gearbox: Instrument panel display

The selector lever lock is released as follows:

– Switch the ignition on.

– Hold the brake pedal pressed down and at the same time, hold the selector lever lock on the left of the selector lever also pressed down.

The position selected appears on the screen with the message **LOCKED** The warning lamp ⊘ at the side of the lever lights up when the brake pedal must be pressed. This is essential when the selector lever is taken from the P or N positions.

The selector lever lock only works if the vehicle is stationary or driving at speeds up to 5 km/h. At higher speeds the selector lever lock is automatically unlocked in the **N** position.

The selector lever lock is not engaged if it is moved quickly through position **N** (e.g. when shifting from **R** to **D**). This makes it possible, for instance, to "rock" the vehicle backwards and forwards if it is stuck in snow or mud. The ▶

selector lever lock engages automatically if the brake pedal is not depressed and the lever is in position **N** for more than about 1 second. ■

Driving a car with an automatic gearbox

The gearbox changes gear ratios automatically as the vehicle moves.

Fig. 98 Automatic gearbox

Starting

– Start the engine with the selector lever in position **P** or **N**.

Driving

– Hold the brake pedal pressed down.

– By holding the lock button (button on the left in the selector lever), select **R**, or **D**.

– Release the lever and wait a little for the gearbox to engage the gear (a slight movement can be felt).

– Release the brake and press the accelerator ⇒ ⚠.

Stopping briefly

– If stopping for a short time, keep the vehicle stationary by pressing the foot brake hard to prevent the car moving backwards on a slope or "creeping" forwards, e.g. at traffic lights. The selector lever does not need to be put into the positions **P** or **N**.

– Do not press the accelerator.

Parking the vehicle

– Press and hold the brake pedal until the vehicle comes to a standstill ⇒ ⚠.

– Apply the handbrake.

– By pressing the lock button down, move the selector lever to **P** and release the lock button.

Driving up and down hills

– Press the selector lever from position "D" to the right into the Tiptronic selector gate.

– Lightly press the selector lever back to change down.

Holding the car on a hill

– The footbrake must be always pressed down to prevent the vehicle from "rolling backwards" ⇒ ⚠. Do not try to prevent the vehicle from "rolling backwards" by increasing the engine speed while a range of gears is selected. ▶

Starting the vehicle up hills

– Apply the handbrake.

– With a selected gear, accelerate slowly and at the same time, release the handbrake.

The steeper the slope, the lower the needed gear. This increases the braking effect of the engine. For example, when driving down a very steep slope in 3rd gear. If the engine brake effect is not enough, the vehicle will speed up. The automatic gearbox automatically changes up to prevent the engine over-revving. Use the foot brake to reduce speed and change into 3rd gear again using Tiptronic* ⇒ ⚠.

Your vehicle has an automatic interlock which prevents the selector lever from being put into a position for driving forwards or in reverse from positions **P** or **N** if the brake pedal is not depressed.

The ignition key cannot be removed unless the selector lever is in position **P**.

Warning lamp "Pressing brake pedal"

When the warning lamp next to the selector lever lights up, press the brake pedal. This is necessary when the automatic gearbox selector lever is moved out of positions **P** or **N**. At the same time, a text message or the instructions to perform necessary operations may appear on the instrument panel.

WARNING

- **As a driver, you should never leave your vehicle if the engine is running and a gear is engaged. If you have to leave your vehicle while the engine is running, you must apply the parking brake and engage parking lock P.**
- **If the engine is running and D or R are engaged, you will need to hold vehicle stopped by depressing the brake pedal. The car would keep on creeping forward as the power transmission is not fully interrupted even when the engine is idling.**
- **Never accelerate when changing gear or you may cause an accident.**

WARNING (continued)

- **Never move the selector lever to R or P when driving. Risk of accident!**
- **Before driving down a long, steep slope, it is advisable to reduce speed and change into a lower gear.**
- **If you stop the vehicle up hill, always hold the foot brake strongly depressed down to stop it from rolling back.**
- **Never allow the brake to rub and do not use the brake pedal too often or for long periods. Constant braking will cause the brakes to overheat and will considerably reduce the brake effect. This increases the braking distance and could cause the brake system to fail.**
- **Never allow the car to roll down a mountain or a slope with the lever in the N or D position, regardless of the engine is running or not.**

Caution

- If you stop the vehicle up hills, do not attempt to stop it from rolling back by depressing the accelerator when a gear has been selected. Otherwise, the automatic gearbox may overheat causing damage. Pull the handbrake up or fully depress the brake pedal to prevent the vehicle from rolling away.
- If you allow the car to roll when the engine is not running, or with the selector lever in position N, a lack of lubrication in the automatic gearbox will damage it. ■

Changing gear with the Tiptronic*

The Tiptronic system allows the driver to change gears manually.

Fig. 99 Automatic gearbox

Changing gear with Tiptronic

- Press the selector lever from position **D** to the right into the Tiptronic selector gate.
- Lightly press the selector forward + to change up into high gears.
- Lightly press the selector lever backwards - to change down into low gears.

When accelerating, the automatic gearbox automatically shifts up to the next gear shortly before the maximum permitted engine speed is reached.

When changing from a higher to a lower gear, the automatic gearbox will change down when the point is where the engine cannot no longer over-rev.

If driving in 3rd gear in position **D** on the automatic gearbox and you change to Tiptronic, 3rd gear is also engaged on the Tiptronic. ■

Selector lever positions

The selector lever positions and gears are shown on the instrument panel screen.

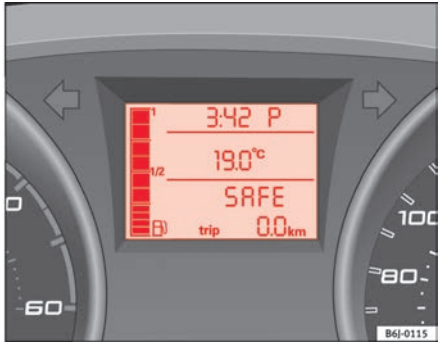

Fig. 100 Automatic gearbox: Display in the dash panel

Selector lever positions

The selected gear is displayed on the side of the selector lever and on the instrument panel screen. The currently selected gear for the automatic gearbox will also be shown on the screen.

Tiptronic gear indicator

If the automatic gearbox is shifted manually, the selected gears are shown on the screen. ▶

P - parking lock

When the selector lever is in this position, the drive wheels are locked mechanically.

Position P on the lever must only be selected if the vehicle is stationary.

To move selector lever from position **P**, the locking button in the selector lever handle must be pressed and the brake pedal depressed at the same time when the ignition is switched on.

To put the selector lever in position **P**, simply press the lock button down and, if necessary, depress the brake pedal down.

R -Reverse gear

The reverse gear is engaged in this position.

Reverse gear must be engaged only when the vehicle is stationary and the engine is idling.

To move the selector lever to position **R**, press the lock button down and, at the same time, press the brake pedal down, with the ignition switched on.

With the selector lever in position **R** and the ignition switched on the following occurs:

- Reverse lights light up.
- The air conditioning changes automatically the air recirculation mode.
- The wiper starts if the windscreen washer is on.
- The parking distance warning system switches on.*

N - Neutral (idling)

If this position is selected, the gearbox is in neutral. Power is not transmitted to the wheels and the engine does not have a braking function.

Never use the **N** position to drive down a hill. The engine does not function as a brake and the brakes are subjected to excessive stain.

You could damage the automatic gearbox if you drive down hills with the selector lever in position **N** and the engine switched off.

D - Drive (forwards)

In this position the gearbox automatically changes to a lower or higher gear, according to the engine's demand, driving style and speed. The braking effect of the engine when driving downhill is very limited when the selector is in this position. On the instrument panel screen it is shown the selected gear and also selector lever to position **D**.

If position **N** has been selected and you wish to select **D**, you must press the foot brake if the vehicle is stationary, or travelling at under 5 km/h.

S - Standard driving position (Sport programme)

When the selector lever is in position **S**, it will automatically change up into a higher gear later, and change down into a low gear, if compared with position **D**. This way, it is possible to take full advantage of the engine reserve power, depending on the engine demand, driving style and speed. The braking effect of the engine when driving downhill is very limited. On the instrument panel screenthe selected gear is shown as well as the selector lever to position **S**.

To select gear range **S**, press the lock button on the selector lever.

WARNING

If the vehicle moves with no control, an accident and serious injury may occur.

- **As a driver, you should never leave your vehicle if the engine is running and a gear is engaged. If you have to leave your vehicle while the engine is running, you must always apply the parking brake and engage parking lock P.**
- **If the engine is running and if D or R are engaged, you will need to hold the the vehicle stopped by depressing footbrake down. The car would creep forward as the power transmission is not fully interrupted even when the engine is idling.**
- **Never accelerate when changing gear or you may cause an accident.**

WARNING (continued)

- **Never move the selector lever to “R” or “P” when driving. Risk of accident.**
- **Before driving down a very steep slope, reduce your speed and shift to position 1st.**
- **Always hold the vehicle on the foot brake if you stop uphills. Otherwise, the vehicle could roll back.**
- **Never allow the brake to rub and do not use the brake pedal too often or for long periods. Constant braking will cause the brakes to overheat and will considerably reduce the brake effect. This increases the braking distance and could cause the brake system to fail.**

WARNING

Never switch the engine off until the vehicle is stationary. You could lose control of your vehicle. This could cause an accident and serious injury.

- **The airbags and belt tensioners do not work when the ignition is switched off.**
- **The brake servo does not work when the engine is not running. You need more force to stop the vehicle.**
- **Power assisted steering does not work when the engine is not running. That is why it is much more difficult to turn the steering wheel.**
- **Never remove the key from the ignition if the vehicle is in motion. The steering lock could suddenly engage, and you would not be able to steer the vehicle.**
- **Never allow the car to roll downhill with the gear in “N”, regardless of the engine is running or not.**

Caution

If you allow the vehicle to move when the engine is switched off or with the selector lever in position “N”, take your foot off the accelerator and wait until the engine starts idling before returning to position “D”. ■

Kickdown feature

The kickdown feature is designed to give maximum acceleration.

If you press the accelerator down thoroughly, the gearbox automatically changes down, depending on speed and engine speed, into a lower gear to take full advantage of give the vehicle maximum acceleration.

The gearbox does not change gear until the engine reaches the maximum determined engine speed for the gear.

WARNING

You could lose control of the vehicle if you accelerate on slippery road surfaces. Risk of serious injury.

- **Be particularly careful when using the kickdown features on slippery road surfaces. With a fast acceleration, the vehicle could lose traction and skid.**
- **You should use the kickdown feature only when traffic and weather conditions allow it to be used safely.** ■

Handbrake

Using the handbrake

The handbrake should be applied firmly to prevent the vehicle from accidentally rolling away.

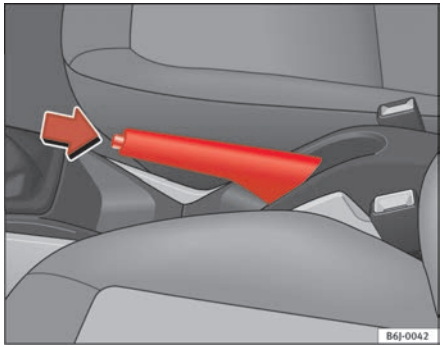

Fig. 101 Handbrake between the front seats

Always apply the handbrake when you leave your vehicle and when you park.

Applying the handbrake

– Pull the handbrake lever up firmly ⇒ fig. 101.

Releasing the handbrake

– Pull the lever up slightly and press the release knob in the direction of the arrow ⇒ fig. 101 and guide the handbrake lever down fully ⇒ ⚠.

Always apply the handbrake *as far as it will go* in order to prevent you from driving with the handbrake applied by mistake ⇒ ⚠.

The handbrake warning lamp (!) lights up when the handbrake is applied and the ignition switched on. The warning turns off when the handbrake is released.

⚠ WARNING

- **Never use the handbrake to stop the vehicle when it is in motion. The braking distance is considerably longer, because braking is only applied to the rear wheels. Risk of accident!**
- **If it is only partially released, this will cause rear brakes overheating, which can impair the function of the brake system and could lead to an accident. This also causes premature wear on the rear brake pads.**

(!) Caution

Always apply the handbrake before you leave the vehicle. The first gear should also be selected. ■

Parking

The handbrake should always be firmly applied when the vehicle is parked.

Always note the following points when parking the vehicle:

– Use the foot brake to stop the vehicle.

– Apply the handbrake.

– The first gear should also be selected. ▶

– Switch the engine off and remove the key from the ignition lock. Turn the steering wheel slightly to engage the steering lock.

– Always take you car keys with you when you leave the vehicle ⇒ ⚠.

Additional notes on parking the vehicle on gradients:

Turn the steering wheel so that the vehicle rolls against the kerb if it started to roll.

- If the vehicle is parked facing **downhill**, turn the front wheels so that they point *towards the kerb*.
- If the vehicle is parked facing **uphill**, turn the front wheels so that they point *away from the kerb*.
- Secure the vehicle as normal by applying the handbrake firmly and engaging first gear.

WARNING

- **Take measures to reduce the risk of injury when you leave your vehicle unattended.**
- **Never park where the hot exhaust system could ignite inflammable materials, such as dry grass, low bushes, spilt fuel etc.**
- **Never allow vehicle occupants to remain in the vehicle when it is locked. They would be unable to open the vehicle from the inside, and could become trapped in the vehicle in an emergency. In the event of an emergency, locked doors will delay assistance to occupants.**
- **Never leave children alone in the vehicle. They could set the vehicle in motion, for example, by releasing the handbrake or the gear lever / selector lever.**
- **Depending on weather conditions, it may become extremely hot or cold inside the vehicle. This can be fatal.** ■

Starting on an uphill*

This function is only included in vehicles with ESP.

This device helps when starting uphill.

These are the basic operation conditions: doors closed, brake pedal pressed down and vehicle in neutral. The system gets activated on engaging gear.

After removing your foot from the brake pedal, the braking force is maintained for a few seconds to prevent the vehicle from moving backward when putting into gear. This short space of time is enough to start the vehicle with ease.

This system also works when reversing uphill.

WARNING

- **If you do not start the vehicle immediately after taking your foot off the brake pedal, the vehicle may start to roll back under certain conditions. Depress the brake pedal or use the hand brake immediately.**
- **If the engine stalls, depress the brake pedal or use the hand brake immediately.**
- **When following a line of traffic uphill, if you want to prevent the vehicle from rolling back accidentally when starting off, hold the brake pedal down for a few seconds before starting off.**

Note

The Official Service or a specialist workshop can tell you if your vehicle is equipped with this system. ■

Acoustic parking aid system*

Rear parking aid

The parking aid system will use an acoustic signal to warn of the approach of any object towards the rear of the vehicle.

Description

The acoustic parking aid system will measure the distance between the rear of the vehicle and any possible obstacle using four ultrasonic sensors located on the rear bumper. The measuring range of the sensors starts at **approximately and depending on the nature of the obstacle** at a distance of:

- side of the rear bumper: 0.6 m
- middle of the rear bumper: 1.6 m

Activation

The system is activated by engagement of the reverse gear. A brief acoustic signal confirms the activation and correct function of the system.

Reverse gear

The distance warning will begin as soon as an obstacle is detected by the system. The frequency of the bleeps emitted by the system will increase rapidly as the vehicle approaches the obstacle.

Within a short distance of about 30cm, a continuous signal sounds (stop signal). The driver should not reverse any further.

Models with a factory-fitted towing bracket: When the vehicle is less than 0.35 m away from the obstacle the warning tone will sound continuously. The driver should then not reverse any further.

The warning tone decreases by 30% after 3 seconds from the start of the system.

Provided that it is not in continuous mode, the tone on the parking aid system stops when it detects a wall parallel to the vehicle.

Trailer towing

For factory-fitted vehicles eith a towing bar, the parking aid system will not be activated by the engagement of the reverse gear when pulling a trailer, as the trailer's electric connector will be plugged into the vehicle.

Possible faults

If a continuous bleep sounds for some seconds when the reverse gear is engaged, this indicates that there is a fault in the parking aid system.

If the fault continues until the ignition is turned off, the acoustic signal warning of the fault will not be emitted every time the system is reactivated (by engaging the reverse gear). Thus, the system ready indication will not sound either. Have the fault repaired by an Authorised Service Centre as soon as possible.

If there is no ready signal or no acoustic warning signal, then the parking aid loudspeaker is faulty and may not warn of obstacles.

To ensure that the system works properly, the sensors must be kept clean and free of ice and snow.

WARNING

- **The sensors have blind spots in which obstacles may not be detected.**
- **Always look out for small children and animals because the system will not always detect them. Always pay attention when reversing to avoid accidents.**
- **The parking aid is not a replacement for driver awareness. The driver must take full responsibility for parking and other manoeuvres.**

Caution

- Please note that low obstacles detected by the system may no longer be registered by the sensors as the car moves closer, so the system will not give any further warning. Certain kinds of obstacles (such as wire fences, chains, thin posts or trailer draw bars, high kerbs or painted railings etc) may not always be detected by the system, so there is a risk of damaging the vehicle in such cases.
- In some cases, obstacles with uniform edges and bumps may not be detected immediately by the system due to their geometry. Take special care of this type of obstacle such as corners, rectangular objects, etc.., these can cause damage to the vehicle.
- Be especially careful when manoeuvring into a corner between two perpendicular walls. Survey the approach of the wall to the side of the vehicle (using the mirrors)
- The parking aid system does not replace use of the mirrors for manoeuvres.
- Distant ultra-sonic sources (hammers, tyres, construction machinery, other vehicles with PDC) may interfere with the operation of the system.
- Periodic cleaning of the sensors, take care not to damage or scratch them. When cleaning with high pressure washers or steam cleaners, the sensors should be sprayed for only a very short period and from a distance of more than 10 cm. ■

Cruise control system (CCS)*

Description

The cruise control system is able to maintain the set speed in the range from approx. 30 km/h to 180 km/h.

Once the speed setting has been saved, you may take your foot off the accelerator.

WARNING

It could be dangerous to use the cruise control system if it is not possible to drive at constant speed.

- **For safety reasons the cruise control system should not be used in dense traffic, in sections with bends or where roads are in bad conditions (e.g. aquaplanning, loose chippings, slippery surfaces, snow). Risk of accident.**
- **Always switch the CCS off when finish to use it in order to avoid an involuntary use.**
- **It is dangerous to use a set speed which is too high for the current road, traffic or weather conditions. Risk of accident.**

Note

The cruise control cannot maintain a constant speed when descending downhills. The vehicle will accelerate due to its own weight. Use the foot brake to slow the vehicle. ■

Switching the cruise control system on and off

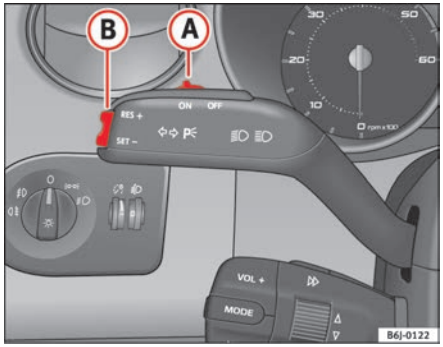

Fig. 102 Turn signal and main beam headlight lever switch and rocker switch for the cruise control

Switching on the system

– Move the control ⇒ fig. 102 (A) to the left to **ON**.

Switching off system

– Move the control (A) to the right to **OFF** or turn the ignition off when the vehicle is stationary.

When the cruise control is on and a speed is programmed, the indicator on the instrument panel is lit.[10)]

If the cruise control system is *switched off*, the symbol is switched off. The system will also be fully switched off when the **1st** gear is selected.* ■

Setting speed*

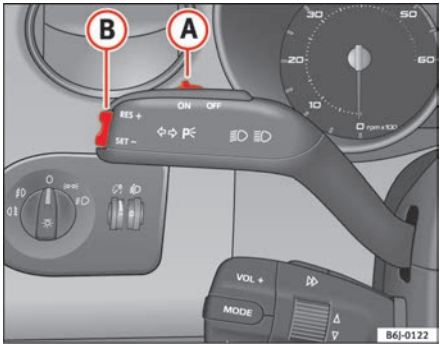

Fig. 103 Indicator and main beam headlight lever: switch and rocker switch for the cruise control

– Press the lower part **SET** of the rocker switch ⇒ fig. 103 (B) once briefly when you have reached the speed you wish to set.

When you release the rocker switch, the current speed is set and held constant. ■

10) Depending on the model version

Adjusting set speed*

The speed can be altered without touching the accelerator or the brake.

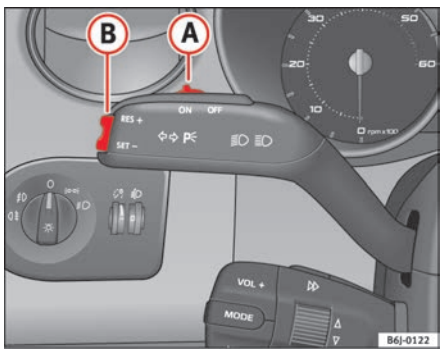

Fig. 104 Indicator and main beam headlight lever: switch and rocker switch for the cruise control

Setting a higher speed

– Press the upper part **RES** of the rocker switch ⇒ fig. 104 (B) to increase the speed. The vehicle will continue to accelerate as long as you keep the rocker switch pressed. When you release the switch, the new speed is stored.

Setting a lower speed

– Press the lower part **SET–** of the rocker switch (B) to reduce the speed. The vehicle will automatically reduce its speed for as long as you keep the switch pressed. When you release the switch, the new speed is stored.

When you increase speed with the accelerator and then release the pedal, the system will automatically restore the set speed. This will not be the case, however, if the vehicle speed is more than 10 km/h higher than the stored speed for longer than 5 minutes. The speed will have to be stored again.

Control of the set speed is switched off if you reduce speed by depressing the brake pedal. Reactivate the control by pressing once on the upper part of the rocker switch **RES+** ⇒ fig. 104 (B).

WARNING

It is dangerous to use a set speed which is too high for the current road, traffic or weather conditions. Risk of accident. ■

Switching off system temporarily*

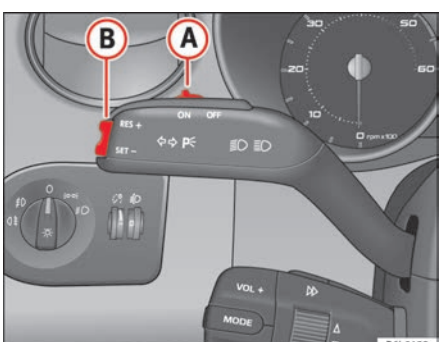

Fig. 105 Turn signal and main beam headlight lever switch and rocker switch for the cruise control

The cruise control system will be switched off in the following situations:

- if the brake pedal is depressed,

- if the clutch pedal is depressed,
- if the vehicle is accelerated to over 180 km/h,
- when the lever (A) is moved in the direction of **OFF** without fully being engaged.

To resume cruise control, release the brake or clutch pedal or reduce the vehicle speed to less than 180 km/h and press once on the upper part of the rocker switch **RES** ⇒ page 146, fig. 105 (B).

WARNING

It is dangerous to use a set speed which is too high for the current road, traffic or weather conditions. Risk of accident. ■

Completely switching off the system

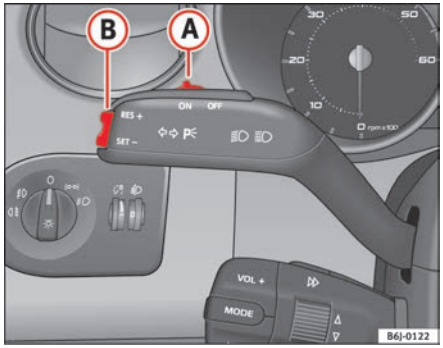

Fig. 106 Indicator and main beam headlight lever: switch and rocker switch for the cruise control

Vehicles with a manual gearbox

The system **is completely turned off** by moving the control (A) all the way to the right hand side (OFF engaged), or when the vehicle is stationary, ignition off.

Vehicles with an automatic gearbox

To completely disengage the system, the selector lever must be placed in one of the following positions: **P**, **N**, **R** or **1** or with the vehicle stopped and the ignition turned off. ■

Practical tips

Intelligent technology

Brakes

Brake servo

The brake servo amplifies the pressure you apply to the brake pedal. It works **only when the engine is running**.

If the brake servo is not functioning due to a malfunction, or if the vehicle has to be towed, you will have to press the brake pedal considerably harder to make up for the lack of servo assistance.

WARNING

The braking distance can also be affected by external factors.

- **Never let the vehicle coast with the engine switched off. Failure to do so could result in an accident. The braking distance is increased considerably as the brake servo does not function.**
- **If the brake servo is not working, for example when the vehicle is being towed, you will have to press the brake pedal considerably harder than normal.** ■

Brake Assist System (BAS)*

The Brake Assist System function is only included in vehicles with ESP.

In an emergency, most drivers brake in time, but not with maximum force. This results in unnecessarily long braking distances.

This is when the brake assist system comes into action. When pressing the brake pedal rapidly, the assistant interprets it as an emergency. It then very quickly builds up the full brake pressure so that the ABS can be activated more quickly and efficiently, thus reducing the braking distance.

Do not reduce the pressure on the brake pedal. The brake assist system switches off automatically as soon as you release the brake.

Warning lights automatic lighting

In the event of sharp or emergency braking, the warning hazard lights will switch on automatically.

WARNING

- **The risk of accident is higher if you drive too fast, if you do not keep your distance to the vehicle in front, and when the road surface is slippery or wet. The increased accident risk cannot be reduced by the brake assist system.**
- **The brake assist system cannot defy the laws of physics. Slippery and wet roads are dangerous even with the brake assist system! Therefore, it is essential that you adjust your speed to suit the road and traffic conditions.** ▶

WARNING (continued)

Do not let the extra safety features tempt you into taking any risks when driving. ■

Anti-lock brake system and traction control ABS

Anti-lock brake system (ABS)

The anti-lock brake system prevents the wheels locking during braking.

The anti-lock brake system (ABS) is an important part of the vehicle?s active safety system.

How the ABS works

If one of the wheels is turns too slowly in relation to the road speed, and is close to locking, the system will reduce the braking pressure for this wheel. The driver is made aware of this control process by a **pulsating of the brake pedal** and audible noise. This is a deliberate warning to the driver that one or more of the wheels is tending to lock and the ABS control function has intervened. In this situation it is important to keep the brake pedal fully depressed so the ABS can regulate the brake application. Do not “pump”.

If you brake hard on a slippery road surface, the best possible control is retained as the wheels do not lock.

However, ABS will not necessarily guarantee shorter braking distances in *all* conditions. The braking distance could even be longer if you brake on gravel or on fresh snow covering a slippery surface.

WARNING

- **The anti-lock brake system cannot defy the laws of physics. Slippery and wet roads are dangerous even with ABS! If you notice that the ABS is working (to counteract locked wheels under braking), you should reduce speed immediately to suit the road and traffic conditions. Do not let the extra safety features tempt you into taking any risks when driving.**
- **The effectiveness of ABS is also determined by the tyres fitted** ⇒ **page 197.**
- **If the running gear or brakes are modified, the effectiveness of the ABS could be severely limited.** ■

Traction control system (TCS)*

The traction control system prevents the drive wheels from spinning when the car is accelerating. The system always includes ABS

Description and operation of the traction control system during acceleration (TCS)

TCS reduces engine power to help prevent the drive wheels of front-wheel drive vehicles losing traction during acceleration. The system works in the entire speed range in conjunction with ABS. If a malfunction should occur in the ABS, the TCS will also be out of action.

TCS helps the vehicle to start moving, accelerate and climb a gradient in slippery conditions where this may otherwise be difficult or even impossible.

The TCS is switched on automatically when the engine is started. If necessary, it may be turned on or off by briefly pushing the ESP button on the centre console.

When the TCS is switched off, the warning lamp flashes slowly. The TCS should normally be left switched on at all times. Only in exceptional circum- ▶

stances, when the slipping of the wheels is required, they can be disconnected with the ESP button, for example.

- With compact temporary spare wheel.
- When using the snow chains.
- When driving in deep snow or on loose surfaces
- When the vehicle is bogged-down, to free it by “rocking.”

The TCS should be switched on again afterwards as soon as possible.

WARNING

- **It must be remembered that TCS cannot defy the laws of physics. This should be kept in mind, particularly on slippery and wet roads and when towing a trailer.**
- **Always adapt your driving style to suit the condition of the roads and the traffic situation. Do not let the extra safety afforded by TCS tempt you into taking any risks when driving, this can cause accidents.**

Caution

- In order to ensure that TCS function correctly, all four wheels must be fitted with the same tyres. Any differences in the rolling radius of the tyres can cause the system to reduce engine power when this is not desired.
- Modifications to the vehicle (e.g. to the engine, the brake system, running gear or any components affecting the wheels and tyres) could affect the efficiency of the ABS and TCS. ■

Electronic stabilisation programme (ESP)*

General notes

The electronic stabilisation programme increases the vehicle?s stability on the road.

The electronic stabilisation programme helps to reduce the danger of skidding.

The electronic stabilisation programme (ESP) consists of **ABS, EDL and TCS.**

Electronic Stabilising Program (ESP)*

ESP reduces the danger of skidding by braking the wheels individually.

The system uses the steering wheel angle and road speed to calculate the changes of direction desired by the driver, and constantly compares them with the actual behaviour of the vehicle. If the desired course is not being maintained (for instance, if the car is starting to skid), then the ESP compensates automatically by braking the appropriate wheel.

The forces acting on the braked wheel bring the vehicle back to a stable condition. If the vehicle tends to oversteer, the system will act on the front wheel on the outside of the turn.

WARNING

- **It must be remembered that ESP cannot defy the laws of physics. This should be kept in mind, particularly on slippery and wet roads and when towing a trailer.**
- **Always adapt your driving style to suit the condition of the roads and the traffic situation. Do not let the extra safety afforded by ESP tempt you into taking any risks when driving, this can cause accidents.**

Caution

- In order to ensure that ESP functions correctly, all four wheels must be fitted with the same tyres. Any differences in the rolling radius of the tyres can cause the system to reduce engine power when this is not desired.
- Modifications to the vehicle (e.g. to the engine, the brake system, running gear or any components affecting the wheels and tyres) could affect the efficiency of the ABS, EDL, ESP and TCS. ■

Anti-lock brake system (ABS)

The anti-lock brake system prevents the wheels locking during braking ⇒ page 150 ■

Electronic differential lock (EDL)*

The electronic differential lock helps prevent the loss of traction caused if one of the driven wheels starts spinning.

EDL helps the vehicle to start moving, accelerate and climb a gradient in slippery conditions where this may otherwise be difficult or even impossible.

The system will control the revolutions of the drive wheels using the ABS sensors (in case of an EDL fault the warning lamp for ABS lights up) ⇒ page 61.

At speeds of up to approximately 80 km/h, it is able to balance out differences in the speed of the driven wheels of approximately 100 rpm caused by a slippery road surface on *one side* of the vehicle. It does this by braking the wheel which has lost traction and distributing more driving force to the other driven wheel via the differential.

To prevent the disc brake of the braking wheel from overheating, the EDL cuts out automatically if subjected to excessive loads. The vehicle will continue to function normally without EDL. For this reason, the driver is not informed that the EDL has been switched off.

The EDL will switch on again automatically when the brake has cooled down.

WARNING

- **When accelerating on a slippery surface, for example on ice and snow, press the accelerator carefully. Despite EDL, the driven wheels may start to spin. This could impair the vehicle?s stability.**
- **Always adapt your driving style to suit road conditions and the traffic situation. Do not let the extra safety afforded by EDL tempt you into taking any risks when driving, this can cause accidents.**

Caution

Modifications to the vehicle (e.g. to the engine, the brake system, running gear or any components affecting the wheels and tyres) could affect the efficiency of the EDL. ⇒ page 173 ■

The traction control system (TCS)

The traction control system prevents the drive wheels from spinning when the car is accelerating. ⇒ page 150 ■

Driving and the environment

Running-in

Running in a new engine

The engine needs to be run-in over the first 1,500 km.

Up to 1,000 kilometres

– Do not drive faster than three quarters of top speed.

– Do not accelerate hard.

– Avoid high engine revolutions.

– Do not tow a trailer.

From 1000 to 1500 km

– Speeds can be *gradually* increased to the maximum road speed or maximum permissible engine speed (rpm).

During its first few hours of running, the internal friction in the engine is greater than later on, when all the moving parts have bedded in.

For the sake of the environment

If the engine is run in gently, its life will be increased and its oil consumption, reduced. ■

Running in tyres and brake pads

New tyres should be run-in carefully for the first 500 km. New brake pads should be run-in carefully for the first 200 km.

During the first 200 km, you can compensate for the reduced braking effect by applying more pressure to the brake pedal. In case of a sharp braking, the braking distance will be longer with new brake pads than with brake pads which have been run-in.

WARNING

- **At first, new tyres do not give maximum grip, and require running-in. This may cause an accident. Drive particularly carefully in the first 500 km.**
- **New brake pads must be "run in" and do not have the correct friction properties during the first 200 km. However, the reduced braking capacity may be compensated by pressing on the brake pedal a little harder.** ■

Braking effect and braking distance

The braking effect and braking distance are influenced by driving situations and road conditions.

The efficiency of the brakes depends directly on the **brake pad** wear. The rate of wear of the brake pads depends to a great extent on the conditions under which the vehicle is operated and the way the vehicle is driven. If you often drive in town traffic, drive short distances or have a sporty driving style, we recommend that you have the thickness of your brake pads checked by an Authorised Service Centre more frequently than recommended in the Service Schedule. ▶

If you drive with **wet brakes**, for example, after crossing water areas, in heavy rainfall or even after washing the car, the effect of the brakes is lessened as the brake discs are wet or even frozen (in winter): The brakes should be "dried" by pressing the pedal to restore full braking effect.

WARNING

Longer braking distances and faults in the brake system increase the risk of accidents.

- **New brake pads must be run in and do not have the correct friction during the first 200 km. However, the reduced braking capacity may be compensated by pressing on the brake pedal a little harder. This also applies when new brake pads are fitted.**
- **If brakes are wet or frozen, or if you are driving on roads which have been gritted with salt, braking power may set in later than normal.**
- **On steep stopes, if brakes are excessively used, they will overheat. Before driving down a long steep stopes, it is advisable to reduce speed and change down into a lower gear (or move the selector lever to a lower gear if your vehicle has automatic transmission). This makes use of engine braking and relieves the brakes.**
- **Never let the brakes "rub" by applying light pressure. Continuous braking will cause the brakes to overheat and the braking distance will increase. Apply and then release the brakes alternately.**
- **Never let the vehicle run with the engine switched off. The braking distance is increased considerably as the brake servo does not function.**
- **Very heavy use of the brakes may cause a vapour lock if the brake fluid is left in the system for too long. This impairs the braking effect.**
- **Non-standard or damaged front spoilers could restrict the airflow to the brakes and cause them to overheat. Observe the relevant instructions before purchasing accessories ⇒ page 173, "Technical modifications".**
- **If a brake circuit fails, the braking distance will be increased considerably. Contact a qualified workshop immediately and avoid unnecessary journeys.** ■

Exhaust gasses purification system

Catalytic converter*

To conserve the useful life of the catalytic converter

– Always use unleaded petrol.

– Do not let the fuel get too low in the tank.

– For engine oil changes, do not top the reservoir up ⇒ page 187, "Topping up engine oil".

– Never tow the vehicle to start it, use jump leads if necessary ⇒ page 227.

If you notice misfiring, uneven running or loss of power when the vehicle is moving, reduce speed immediately and have the vehicle inspected at the nearest qualified workshop. In general, the exhaust warning lamp will light up when any of the described symptoms occur ⇒ page 57. If this happens, unburnt fuel can enter the exhaust system and escape into the environment. The catalytic converter can also be damaged by overheating.

WARNING

The catalytic converter reaches very high temperatures! Fire hazard!

- **Never park where the catalytic converter could come into contact with dry grass or inflammable materials under the vehicle.**
- **Do not apply additional underseal or anti-corrosion coatings to the exhaust pipes, catalytic converter or the heat shields on the exhaust system. These materials could catch fire when the vehicle is being driven.** ▶

Caution

Never fully drain the fuel tank because the irregularity of the fuel supply may cause ignition problems. This allows unburnt fuel to enter the exhaust system, which could cause overheating and damage the catalytic converter.

For the sake of the environment

Even when the emission control system is working perfectly, there may be a smell of sulphur from the exhaust under some conditions. This depends on the sulphur content of the fuel used. Quite often the problem can be solved by changing to another fuel brand. ■

Diesel engine particulate filter*

The diesel engine particulate filter eliminates soot produced by burning diesel.

The diesel engine dust filter eliminates most of the soot from the exhaust gas system. Under normal driving conditions, the filter cleans itself. If the driving conditions do not allow the filter to clean itself (for example, multiple short trips) the filter will be obstructed by dust and pollen and the indicator for the diesel engine particulate filter indicator will light. See under Warning Lights.

WARNING

- **The diesel engine particulate filter may reach extremely high temperatures; it should not enter into contact with flammable materials underneath the vehicle. Failure to comply could result in fire.**

Caution

- The vehicle has not been made to refuel with mixtures of FAME fuel (biodiesel) over 7%. The diesel particle filter is damaged when the mixture percentage is exceeded. ■

Driving abroad

Observations

To drive abroad, the following must be taken into consideration:

- For vehicles fitted with a catalytic converter ensure that unleaded petrol is available for the journey. See the chapter “Refuelling”. Automobile organisations will have information about service station networks selling unleaded fuel.
- In some countries, it is possible that a vehicle model is sold under conditions where some spare parts are not available or that the Authorised Service Centre may only carry out limited repairs.

SEAT importers and distributors will gladly provide information about the technical preparation of your vehicle and also about necessary maintenance and repair possibilities. ■

Adhesive strips for headlights

If you have to drive a right-hand drive vehicle in a left-hand drive country, or vice versa, the asymmetric dipped beam headlights will dazzle oncoming traffic.

To prevent dazzling, you must apply stickers to certain parts of the headlight lenses. Further information is available in your Authorised Service Centre.

In vehicles with self-directing headlights, the rotation system must previously be disconnected. To do this, please go to a specialist workshop. ■

Covering single headlights for driving on the left*

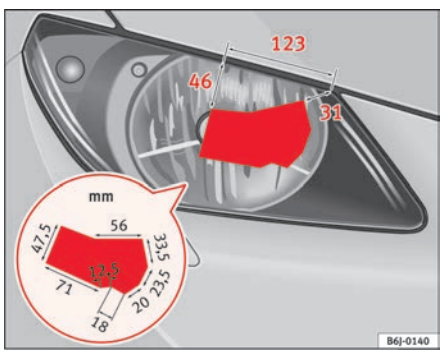

Fig. 107 Right headlight

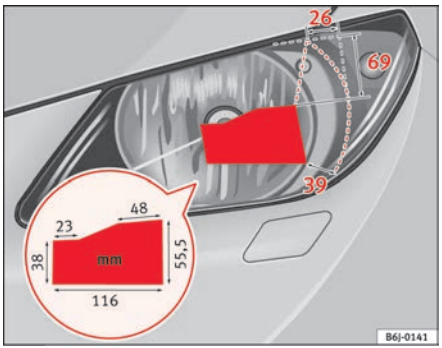

Fig. 108 Left headlight

On the right-hand side headlight, if you are changing from driving on the right-hand side to the left-hand side.

On the left-hand side headlight, if you are changing from driving on the left-hand side to the right-hand side. ■

Covering single headlights for driving on the right*

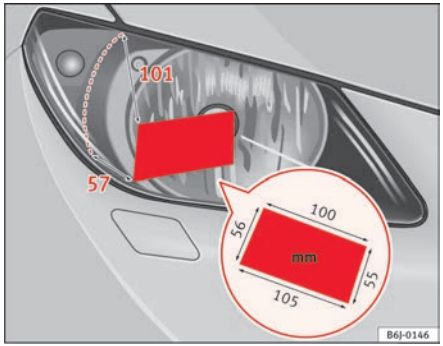

Fig. 109 Right headlight

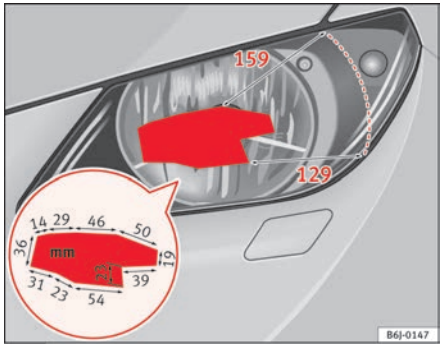

Fig. 110 Left headlight

On the right headlight, if you are changing from driving on the left-hand side to the right-hand side.

On the left headlight, if you are changing from driving on the left-hand side to the right-hand side. ■

Covering double headlamps for driving on the left*

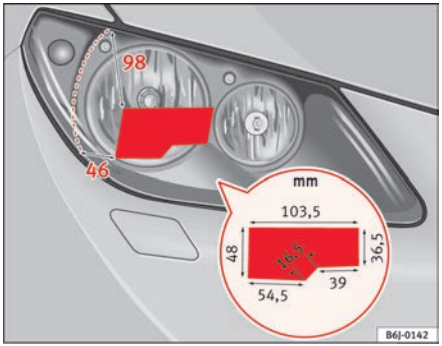

Fig. 111 Right headlight

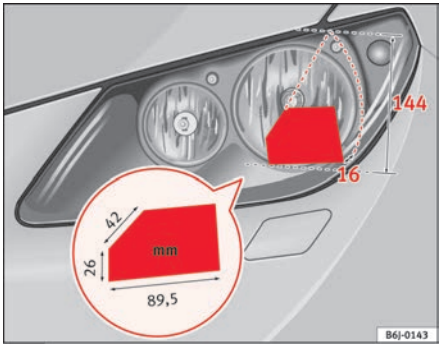

Fig. 112 Left headlight ▶

On the right-hand side headlight, if you are changing from driving on the right-hand side to the left-hand side.

On the left hand side headlight, if you are changing from driving on the right-hand side to the left-hand side. ■

Covering double headlamps for driving on the right*

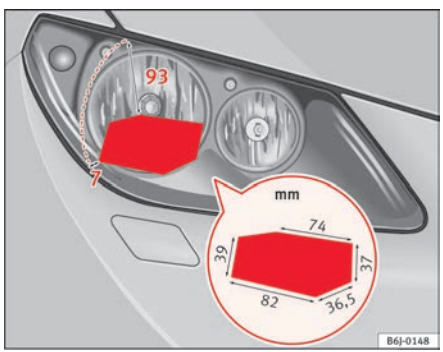

Fig. 113 Right headlight

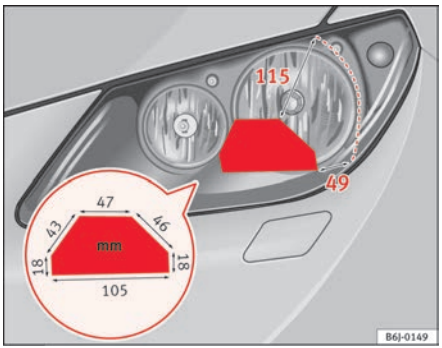

Fig. 114 Left headlight

On the right headlight, if you are changing from driving on the left-hand side to the right-hand side.

On the left headlight, if you are changing from driving on the left-hand side to the right-hand side. ■

Covering xenon headlamps for driving on the left*

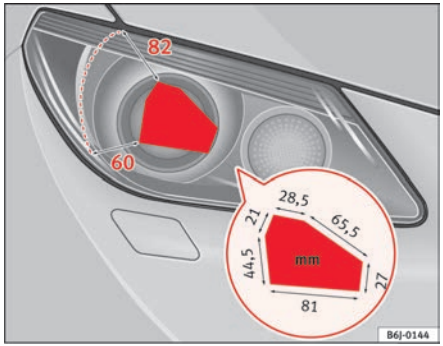

Fig. 115 Right headlight

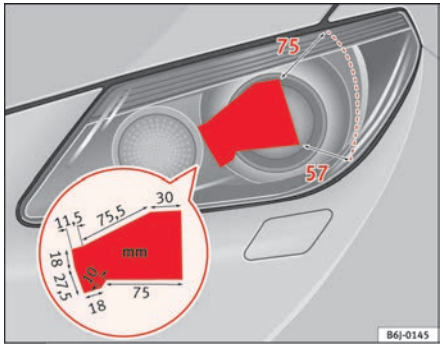

Fig. 116 Left headlight

On the right-hand side headlight, if you are changing from driving on the right-hand side to the left-hand side.

On the left hand side headlight, if you are changing from driving on the right-hand side to the left-hand side. ■

Covering xenon headlamps for driving on the right*

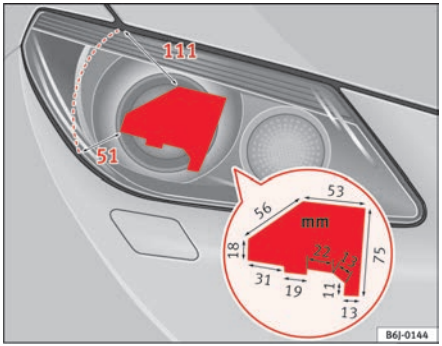

Fig. 117 Right headlight

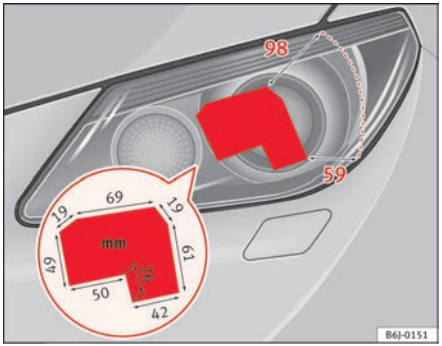

Fig. 118 Left headlight ▶

On the right headlight, if you are changing from driving on the left-hand side to the right-hand side.

On the left headlight, if you are changing from driving on the left-hand side to the right-hand side. ■

Trailer towing

What do you need to bear in mind when towing a trailer?

Your vehicle may be used to tow a trailer when fitted with the correct equipment.

If the car is supplied with a **factory-fitted** towing bracket it will already have the necessary technical modifications and meet the statutory requirements for towing a trailer. For the **after-market fitting** of a trailer towing bracket see ⇒ page 176.

Connectors

Your vehicle is fitted with a 12-pin connector for the electrical connection between the trailer and the vehicle.

If the trailer has a **7-pin plug** you will need to use an adapter cable. This is available in any SEAT dealer.

Trailer weight / draw bar loading

Never exceed the authorised towing limit. If you do not load the trailer up to the maximum permitted trailer weight, you can then climb correspondingly steeper slopes.

The maximum trailer weights listed are only applicable for **altitudes** up to 1,000 m above sea level. With increasing altitude the engine power and therefore the vehicle's climbing ability are impaired because of the reduced air density. The maximum trailer weight has to be reduced accordingly. The weight of the vehicle and trailer combination must be reduced by 10% for every further 1,000 m (or part thereof). The gross combination weight is the actual weight of the laden vehicle plus the actual weight of the laden trailer. When possible, operate the trailer with the maximum permitted **draw bar weight** on the ball joint of the towing bracket, but do not exceed the specified limit.

The figures for **trailer weights** and **draw bar weights** that are given on the data plate of the towing bracket are for certification purposes only. The correct figures for your specific model, which may be *lower* than these figures for the towing bracket, are given in the registration documents ⇒ Section “Technical data”.

Distributing the load

Distribute loads in the trailer so that heavy objects are as near to the axle as possible. Loads carried in the trailer must be secured to prevent them moving.

Tyre pressure

Set tyre pressure to the maximum permissible pressure shown on the sticker on the inside of the fuel tank flap. Set the tyre pressure of the trailer tyres in accordance with the trailer manufacturer's recommendations.

Exterior mirrors

Check whether you can see enough of the road behind the trailer with the standard mirrors. If this is not the case, you should have additional mirrors fitted. Both exterior mirrors should be mounted on hinged extension brackets. Adjust the mirrors to give sufficient vision to the rear.

WARNING

Never transport people in a trailer. This could result in fatal accidents. ▶

Note

- Towing a trailer places additional demands on the vehicle. We recommend additional services between the normal inspection intervals if the vehicle is used frequently for towing a trailer.
- Find out whether special regulations apply to towing a trailer in your country. ■

Ball coupling of towing bracket*

The ball coupling is provided with instructions on fitting and removing the ball coupling of the towing bracket.

WARNING

The towing bracket ball coupling must be stored securely in the luggage compartment to prevent them being flung through the vehicle and causing injury.

Note

- By law, the ball coupling must be removed if a trailer is not being towed and it obscures the number plate. ■

Driving tips

Driving with a trailer always requires extra care.

Weight distribution

The weight distribution of a loaded trailer with an unladen vehicle is very unfavourable. However, if this cannot be avoided, drive extra slowly to allow for the unbalanced weight distribution.

Speed

The stability of the vehicle and trailer is reduced with increasing speed. For this reason, it is advisable not to drive at the maximum permissible speed in an unfavourable road, weather or wind conditions. This applies especially when driving downhill.

You should always reduce speed immediately if the trailer shows the slightest sign of **snaking**. Never try to stop the “snaking” by increasing speed.

Always brake in due course. If the trailer has an **overrun brake**, apply the brakes *gently at first* and then, firmly. This will prevent the jerking that can be caused by the trailer wheels locking. Select a low gear in due course before going down a steep downhill. This enables you to use the engine braking to slow down the vehicle.

Reheating

At very high temperatures and during prolonged slopes, driving in a low gear and high engine speed, always monitor the temperature indicator for the coolant ⇒ page 49.

Electronic Stabilisation Program*

The ESP* system helps to stabilise the trailer in case of skiding or rocking. ■

Economical and ecological driving

General notes

Fuel consumption depends to a large extent on your personal driving style.

Fuel consumption, environmental impact and engine, brakes and tyres wear depend largely on three factors:

- Personal driving style
- Conditions of use (weather, road surface)
- Technical requirements

By adopting an economical driving style and anticipating the traffic situation ahead, you can easily reduce fuel consumption by 10-15%. This section suggests methods of lessening the impact on the environment and reducing your operating costs at the same time. ■

Foresight when driving

A vehicle uses most fuel when accelerating. If you think ahead when driving, you will need to brake less and thus accelerate less. Wherever possible, take advantage of your vehicle inertia, for instance when you see that the next traffic light is red. ■

Regular services

By taking your car to an Authorised Service Centre for regular servicing you can establish a basis for good fuel economy *before* you start driving. A well-serviced engine gives you the benefit of **improved fuel efficiency** as well as maximum reliability and an enhanced resale value.

A badly serviced engine can consume up to 10% more fuel than necessary.

Check the **oil level** every time you fill the tank ⇒ page 186. Oil consumption depends to a great extent on the engine load and engine speed. Depending on your personal driving style, oil consumption can be up to 1 litre per 1,000 km. ■

Avoid short journeys

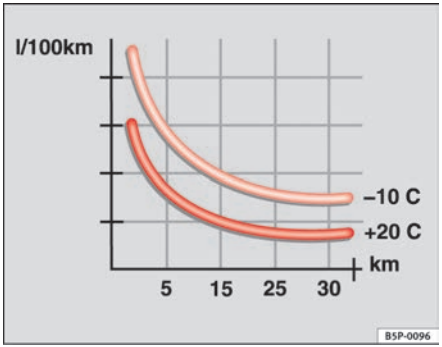

Fig. 119 Fuel consumption in litres per 100 km at two different ambient temperatures

The engine and catalytic converter need to reach their proper **working temperature** in order to minimise fuel consumption and emissions.

Directly after a cold start, the engine uses about 50-70 litres of fuel per 100 km. This figure then drops to 20-30 litres per 100 km after about one kilometre. The engine only reaches its working temperature after about *four* kilo- ▶

metres, when fuel consumption will return to a normal level. You should therefore avoid short journeys.

The **ambient temperature** has a decisive influence.

The illustration shows the different rates of fuel consumption for the same distance at both +20°C and -10°C. Your vehicle will use more fuel in winter than in summer. ■

Your vehicle maintenance and cleaning

General notes

Regular washing and care help maintain the value of your vehicle.

Your vehicle maintenance

Regular care and washing help to **maintain the value** of the vehicle. This may also be one of the requirements for acknowledging warranty claims in the event of bodywork corrosion or paint defects.

The best way to protect the car against environmental contaminants is to wash and mantain it *frequently*. The longer substances such as insects remains, bird droppings, resinous tree sap, road dirt, industrial deposits, tar, soot or road salt and other aggressive materials remain on the vehicle, the more damage they do to the paintwork. High temperatures (for instance in strong sunlight) further intensify the corrosive effect.

After winter, a period when salt is put on the roads, it is important to have the **underside** of the vehicle washed thoroughly.

Products for vehicle maintenance

Car care products are available in your Authorised Service Centre. Keep the product instructions until you have used them up.

WARNING

- **Car care products can be toxic. For this, they must always be kept closed in their original container. Keep them out of the reach of children. Failure to comply could result in poisoning.**
- **Always read and observe the instructions and warnings on the package before using car care products. Improper use could damage your health or**

WARNING (continued)

your vehicle. The use of certain products may produce noxious vapours; they should be used in well ventilated areas.

- **Never use fuel, turpentine, engine oil, nail varnish remover or other volatile fluids. These are toxic and highly flammable. Risk of fire and explosion.**
- **Before washing your vehicle, or carrying out any maintenance, switch the engine off, apply your handbrake firmly and remove the key from the ignition.**

Caution

Never attempt to remove dirt, mud or dust if the surface of the vehicle is dry. Never use a dry cloth or sponge for cleaning purposes. This could damage the paintwork or the windows of your vehicle. Soak dirt, mud or dust with plenty of water.

For the sake of the environment

- When purchasing products for your vehicle maintenance, select the ones which are not harmful to the environment.
- The leftovers of the car care products should not be disposed of with ordinary household waste. Observe the disposal information on the package. ■

Vehicle exterior maintenance

Automatic car washing tunnel

The vehicle paintwork is so durable that the car can normally be washed without problems in an automatic car washing tunnel. However, the paintwork wear depends to a large extent, on the kind of the car washing tunnel, the brushes used, its water filtering and the type of cleaning and preservative products.

Before going through a car wash, be sure to take the usual precautions such as closing the windows and sunroof. There is nothing to note apart from that.

If the vehicle has special accessories such as spoilers or a roof carrier or two-way radio aerial, etc., it is advisable to consult the car washing tunnel operator.

After washing, the **brakes** could hesitate to respond as the brake discs and pads could be wet, or even frozen in winter. “Dry” the brakes by braking several times.

WARNING

Water, ice and salt on the brakes can reduce braking efficiency. Risk of accident.

Caution

Before putting the vehicle through the car washing tunnel, do not tighten the aerial if it is folded because it can be damaged. ■

Washing by hand

Vehicle washing

– First soften the dirt with plenty of water and rinse it off.

– Clean your vehicle from top to bottom with a soft sponge, a glove or a brush. Use very light pressure.

– Rinse the sponge or glove often with clean water.

– Special car shampoo should only be used for very stubborn dirt.

– Clean the wheels, sill panels etc. until last with a different sponge or glove.

– Rinse the vehicle thoroughly with water.

– Dry your vehicle surface gently with a chamois leather.

– When **temperature is cold**, dry the rubber seals and its surfaces to prevent them from freezing. Apply silicone spray to the rubber seals.

After washing

– Directly after washing, avoid sudden and sharp braking. “Dry” ⇒ page 153, “Braking effect and braking distance”the brakes by braking several times.

WARNING

- **Wash your car with the ignition switched off.**
- **Protect your hands and arms from cuts on sharp metal edges when cleaning the underbody, the inside of the wheel housings etc. Risk of injury.**

WARNING (continued)

- **Water, ice and salt on the brakes can reduce braking efficiency. Risk of accident.**

Caution

- Never remove dirt, mud or dust if the vehicle surface is dry. Never use a dry cloth or sponge for cleaning purposes. This could scratch the paintwork or glass on your vehicle.
- Washing the vehicle in low temperatures: when washing the vehicle with a hose, do not direct water into the lock cylinders or the gaps around the doors, tailgate, or sunroof. Risk of freezing.

For the sake of the environment

To protect environment, the car should be washed only in specially provided wash bays. This prevents toxic, oil-laden waste water entering the sewerage system. In some districts, washing vehicles outside wash bays is prohibited.

Note

Do not wash the vehicle in direct sunlight. ■

Washing the car with a high pressure cleaner

Be particularly careful when using a high pressure cleaner!

– Always observe the instructions for the high-pressure cleaner, particularly those concerning the **pressure** and the **spraying distance**.

– Increase the spraying distance for soft materials and painted bumpers.

– Do not use a high pressure cleaner to remove ice or snow from windows ⇒ page 167.

– Never use concentrated jet nozzles (“rotating jets”) ⇒ ⚠.

– Directly after washing, avoid sudden and sharp braking. “Dry” ⇒ page 153 the brakes by braking several times.

WARNING

- **Never wash tyres with a concentrated jet (“rotating nozzle”). Even at large spraying distances and short cleaning times, visible and invisible damage can occur to the tyres. This may cause an accident.**
- **Water, ice and salt on the brakes can reduce braking efficiency. Risk of accident.**

Caution

- Do not use water hotter than 60°C. This could damage the car.
- To avoid damage to the vehicle, keep a sufficient distance from sensitive materials such as flexible hoses, plastic, soundproofing material, etc. This is also important for bumpers painted as the paintwork. The closer the nozzle is to the surface, the greater the wear on the material. ■

Vehicle paint maintenance requirements

Regular waxing protects the paintwork.

You need to apply wax to your car if water does not form small drops and run off the paintwork when it is *clean*.

A good quality *hard wax* product is available from your Authorised Service Centre.

Regular wax applications help to protects the paintwork from environmental contaminants. ⇒ page 164. It even protects against minor scratches.

Even if a **wax solution** is used regularly in the car washing tunnel, it is advisable to protect the paint with a hard wax coating at least twice a year. ■

Polishing the paintwork

Polishing brings back gloss to the paintwork.

Polishing is only necessary if the paint has lost its shine, and the gloss cannot be brought back by applying wax. Polishing products can be purchased in your Authorised Service Centre.

The car must be waxed after polishing if the polish used does not contain wax compounds to seal the paint ⇒ page 167, “Vehicle paint maintenance requirements”.

Caution

To prevent damage to the paintwork:

- Do not use polishes and hard wax on painted parts with a matte finish or on plastic parts.
- Do not polish your vehicle in a sandy or dusty environment. ■

Caring for plastic parts

Solvents damage plastic parts.

If normal washing fails to clean plastic parts, clean them with approved **solvent-free** plastic cleaning and care products.

Caution

- The use of liquid air freshener directly over the air vents of the vehicle may damage the plastic parts if the liquid is accidentally spilled.
- Cleaning products which contain solvents will damage the material. ■

Cleaning windows and exterior mirrors

Cleaning windows

– Moisten the windows with commercially available, alcohol based glass cleaner.

– Dry the windows with a clean chamois leather or a lint-free cloth.

Removing snow

– Use a small brush to remove snow from the windows and mirrors.

Removing ice

– Use a de-icer spray.

Use a clean cloth or chamois leather to dry the windows. The chamois leathers used on painted surfaces are not suitable to clean windows because they are soiled with wax deposits which could smear the windows. ▶

If possible, use a de-icing spray to remove ice. If you use an ice scraper, push it in one direction only without swinging it.

Use window cleaner or a silicone remover to clean rubber, oil, grease and silicone deposits off.

Wax deposits can be removed with a special cleaner available in your Authorised Service Centre. Wax deposits on the windscreen could cause the wiper blades to judder. If a window cleanser, specifically for removing wax, is added to the windscreen washer fluid prevents wiper blades from juddering. Wax deposits are not removed.

Caution

- Never use warm or hot water to remove snow and ice from windows and mirrors. This could cause the glass to crack!
- The heating element for the rear window is located on the inner side of the window. To prevent damage, do not put stickers on the heating elements inside the window. ■

Cleaning windscreen wiper blades

Clean wiper blades are essential to provide clear vision.

1. Use a soft cloth to remove dust and dirt from the windscreen wiper blades.
2. Use window cleanser to clean the windscreen wiper blades. Use a sponge or a cloth to remove stubborn stains. ■

Rubber seals maintenance

If rubber seals are well looked after, they will not freeze so quickly.

1. Use a soft cloth to remove dust and dirt from the rubber seals.
2. Apply a specialist care product to the rubber seals.

The strips on the doors, windows, bonnet and rear lid will remain pliable and last longer if they are treated with a suitable care product (for example silicone spray).

Caring for rubber seals will also prevent premature ageing and leaks. The doors will be easier to open. If rubber seals are well looked after, they will not freeze so quickly in winter. ■

Door lock cylinders

The door lock cylinders can freeze up in winter.

To de-ice the lock cylinders you should only use spray with lubricating and anti-corrosive properties. ■

Cleaning chrome parts

1. Clean chrome parts with a damp cloth.
2. Polish chrome parts with a soft, dry cloth. ▶

If this does not provide satisfying results, use a specialist **chrome cleaning product**. Chrome cleaning products will remove stains and coatings from the surface.

Caution

To prevent scratching chrome surfaces:

- Never use an abrasive care product on chrome.
- Do not clean or polish chrome parts in a sandy or dusty environment. ■

Steel wheel rims

– Clean steel wheel rims regularly using a separate sponge.

Use an industrial cleanser to remove brake dust. Any damage to the paint on steel wheel rims should be repaired before starting to rust.

WARNING

- **Never wash tyres with a cylindrical jet. Even at large spraying distances and short cleaning times, visible and invisible damage can occur to the tyres. This may cause an accident.**
- **Water, ice and salt on the brakes can reduce braking efficiency. Risk of accident. Directly after washing, avoid sudden and sharp braking. “Dry” ⇒ page 153, “Braking effect and braking distance”the brakes by braking several times.** ■

Cleaning alloy wheel rims

Every two weeks

– Wash salt and brake dust from alloy wheels.

– Use an acid free detergent to clean the wheel rims.

Every three months

– Apply a hard wax compound to the wheels.

Alloy wheels require regular attention to preserve their appearance. If road salt and brake dust are not often removed, the aluminium finish will be impaired.

Always use an acid-free detergent for alloy wheel rims.

Car polish or other abrasive agents should not be used. If the protective coating is damaged, e.g. by stone impact, the damaged area should be repaired immediately.

WARNING

- **Never wash tyres with a cylindrical jet. Even at large spraying distances and short cleaning times, visible and invisible damage can occur to the tyres. This may cause an accident.**
- **Water, ice and salt on the brakes can reduce braking efficiency. Risk of accident. Directly after washing, avoid sudden and sharp braking. “Dry” ⇒ page 153, “Braking effect and braking distance”the brakes by braking several times.** ■

Underbody maintenance

The vehicle underbody is coated to protect it from chemical and mechanical damage.

The protective coating can be damaged when driving. We recommend you to ckeck the protective coating under the body and on the running gear, and reinstated if necessary, before and after the winter season.

We recommend you to go to your Authorised Service Centre to carry out repair work and additional anti-corrosion work.

WARNING

Do not apply underseal or anti-corrosion coatings to the exhaust pipes, catalytic converter or the heat shields on the exhaust system. The heat of the exhaust system or the engine could cause them to ignite! Fire hazard. ■

Cleaning the engine compartment

Take special care when cleaning the engine compartment.

Anti-corrosion treatment

The engine compartment and the surface of the power unit are given anti-corrosion treatment at the factory.

Good corrosion protection is particularly important in winter when the car is frequently driven on salted roads. To prevent the salt corroding the vehicle, the entire engine compartment should be thoroughly cleaned before and after winter.

Your Authorised Service Centre has got the necessary equipment to provide the correct cleaning and preserving products. For this reason, we recommend having this work performed by them.

The anti-corrosion protection is usually removed if the engine compartment is cleaned with grease removing solutions, or if you have the engine cleaned. On commissioning theis work, ensure that all surfaces, seams, joints and components in the engine compartment are given anti-corrosion treatment.

WARNING

- **When working in the engine compartment, always observe the safety warnings ⇒ page 181.**
- **Before opening the bonnet, switch the engine off, apply the parking brake firmly and always remove the key from the ignition.**
- **Allow the engine to cool before you clean the engine compartment.**
- **Do not clean the vehicle underbody, wheel arches without protecting your hands and arms. You may cut yourself on sharp-edged metal parts. Failure to comply could result in injury.**
- **Moisture, ice and salt on the brakes may affect braking efficiency. Risk of accident. Directly after washing, avoid sudden and sharp braking.**
- **Never touch the radiator fan. It is temperature-controlled and could start automatically, even when the key is removed from the ignition!**

For the sake of the environment

Fuel, grease and oil deposits could be removed when the engine is washed. The polluted water must be cleaned in an oil separator. For this reason, engine washing should be carried out only by a qualified workshop or a petrol station. ■

Vehicle interior maintenance

Plastic parts and dash panel cleaning

– Use a clean, damp cloth to clean plastic parts and the dash panel.

– If this does not provide satisfactory results, use a special **solvent-free** plastic cleaning product.

WARNING

Never clean the dash panel and the airbag module surface with cleansers containing solvents. Solvents cause the surface to become porous. If the airbag triggered, disintegrating plastic parts could cause substantial injuries.

Caution

Cleaning products which contain solvents will damage the material. ■

Wooden trim cleaning*

– Clean the wooden trim with a water-moistened clean cloth.

– If this does not provide satisfactory results, use a *gentle* soap solution.

Caution

Cleaning products which contain solvents will damage the material. ■

Cloth seat covers and fabric trim cleaning

Cloth seat covers and fabric trim on the doors, headlining etc. can be cleaned with a special interior cleanser or with dry foam and a soft brush. ■

Leather cleaning*

Normal cleaning

– Moisten a cotton or woollen cloth with water and wipe over the leather surfaces.

Cleaning stubborn stains

– More stubborn dirt can be removed using a mild soap solution (pure liquid soap; two tablespoons diluted in one litre of water) and a cloth.

– Do not let the water soak through the leather or soak into the seams.

– Then wipe off with a soft, dry cloth.

Leather maintenance

– The leather should be treated twice a year with a special leather-care product, available in your Authorised Service Centre.

– Apply these products very sparingly.

– Then wipe off with a soft, dry cloth.

SEAT does everything possible to preserve the genuine qualities of this natural product. Due to the natural properties of the specially selected hides ▶

employed, the finished leather has a certain sensitivity to grease and dirt, etc. so a degree of care is required in everyday use and when looking after the leather.

Dust and grit in the pores and seams can scratch and damage the surface. If the vehicle is under solar radiation for long periods, the leather should be protected to prevent it from fading. However, slight colour variations in high-quality natural leather are normal.

Caution

- Do not use solvents, wax polish, shoe cream, spot removers or similar products on leather.
- To avoid damage, stubborn stains should be removed by a qualified workshop. ■

Seat belts cleaning

A dirty belt may not work properly.

Check all seat belts regularly and keep them clean.

Seat belts cleaning

– Pull the dirty seat belt right out and unroll it.

– Clean the dirty seat belts with a *gentle* soap solution.

– Allow it to dry.

– Do not roll the seat belt up until it is dry.

If large stains form on the belts, it will not retract correctly into the automatic belt retractor.

WARNING

- **Do not use chemical cleaning agents on the seat belts, as this can impair the strength of the webbing. Ensure that belts do not come into contact with corrosive fluids.**
- **Check all seat belts condition at regular intervals. If you notice that the belt webbing, fittings, retractor mechanism or buckle of any of the belts is damaged, the belt must be replaced by a specialist workshop.**
- **Do not attempt to repair a damaged seat belt yourself. The seat belts must not be removed or modified in any way.**

Caution

After cleaning, allow seat belts to dry completely before rolling them up. Otherwise, the belt retractors could become damaged. ■

Accessories, parts replacement and modifications

Accessories and spare parts

Always consult an Authorised Service Centre before purchasing accessories and parts.

Your vehicle is designed to offer a high standard of active and passive safety.

Before purchasing accessories and parts, and before making technical changes to your car, we recommend you to consult your Authorised Service Centre.

SEAT dealerships will be happy to provide you with the latest information about the use, legal requirements and recommendations from the manufacturer regarding accessories and parts.

We recommend you to use only **SEAT Approved Accessories®** and **SEAT Approved Spare Parts®**. This way, SEAT can guarantee that the product in question is suitable, reliable and safe. SEAT Authorised Service Centres have the necessary experience and facilities to ensure that parts are correctly and professionally installed.

Despite a continuous observation of the market, SEAT is not able to assess the reliability, safety and suitability of those parts **SEAT has not approved**. For this reason, SEAT cannot assume responsibility for any non-genuine parts used, even if these parts have been approved by an official testing agency or are covered by an official approval certificate.

Any **equipment subsequently installed** which has a direct effect on the vehicle and/or the way it is driven (e.g. cruise control system or electronically-controlled suspension) must be approved by SEAT and bear the **e** mark (the European Union's authorisation symbol).

If any **additional electrical components** are fitted so that they do not serve to control the vehicle itself (for instance a refrigerator box, laptop or ventilator fan, etc.), then they must bear the **CE** mark (European Union manufacturer conformity declaration).

WARNING

Accessories, for example telephone holders or drink holders, should never be fitted on the covers of, or within the working range of the airbags. Otherwise, there is a danger of injury if the airbag is triggered in an accident. ■

Technical modifications

Modifications must always be carried out according to our specifications.

Unauthorised modifications to the electronic components or software in the vehicle may cause malfunctions. Due to the way the electronic components are linked together in networks, other indirect systems may be affected by the faults. This can seriously impair safety, lead to excessive wear of components, and also invalidate your vehicle registration documents.

SEAT Authorised Service Centres cannot be held liable for any damage caused by modifications and/or work incorrectly performed.

For this reason, we recommend you that all work should be performed by an Authorised Service Centre using **genuine and SEAT ® approved parts and accessories**.

WARNING

Incorrectly performed modifications or other kind of work on your vehicle can lead to malfunctions and cause accidents. ■

Roof aerial*

The vehicle can be fitted with a collapsible roof aerial* with antitheft system*, which can be folded backwards, when, for example, going through an automatic carwash.

To fold

Unscrew the aerial rod, tilting it backwards into a horizontal position and then screw in again.

To return to working position

Continue in the reverse order to the previous instruction.

Caution

Before putting the vehicle through the car washing tunnel, do not tighten the aerial if it is folded because it can be damaged. ■

Mobile telephones and two-way radios

You will require an external aerial for mobile phones and two-way radios.

SEAT has approved for your vehicle the use of mobile telephones and two-way radios providing under the following conditions:

- The correct installation of an external aerial,
- transmitting power of maximum 10 watts.

An only external aerial is needed to give the equipment its optimal reach.

First consult your Authorised Service Centre if you wish to use a mobile telephone or a two-way radio with a transmitting power output in excess of 10 watts. Here you will receive information concerning the technical possibilities for retrofitting this equipment.

Mobile telephones and two-way radios should be only fitted by a qualified workshop, for example an Authorised Service Centre.

WARNING

- **Always concentrate primarily on driving. If you are distracted while driving you could have an accident.**
- **Never attach the telephone mountings to the surfaces covering the airbag units or within the range of the airbags. There is a high danger of injury if the airbag is triggered.**
- **Using your mobile telephones or two-way radios in the vehicle without an external aerial, electromagnetic radiation in the vehicle could exceed authorised limits. This also may occur to external aerials that have not been correctly installed.**

Caution

Failure to consider the above-mentioned conditions could cause the electronics to malfunction. The most common causes of faults are:

- no external aerial,
- external aerial incorrectly installed,
- transmitting power output in excess of 10 watts.

▶

Note

Please observe the operating instructions of your mobile telephone / two-way radio. ■

Fitting a towing bracket*

It is possible to fit a towing bracket to the rear of the vehicle.

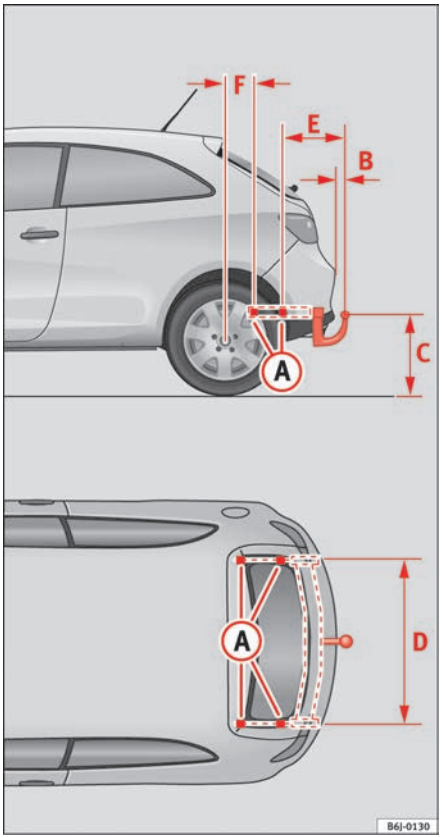

Fig. 120 Attachment points for towing bracket

If a towing bracket is to be fitted after the vehicle is purchased, this must be completed according to the instructions of the towing bracket manufacturer.

The attachment points for the towing bracket (A) are on the lower part of the vehicle.

The distance between the centre of the ball coupling and the ground should never be lower than the indicated value, even with a fully loaded vehicle and including the maximum resting weight.

Elevation values for securing the towing bracket:

(B) 65 mm (minimum)
(C) from 350 mm to 420 mm (fully loaded vehicle)
(D) 959 mm
(E) 438 mm
(F) 209 mm

Fitting a towing bracket

- Driving with a trailer involves an extra effort for the vehicle. Therefore, before fitting a towing bracket, please contact an Authorised Service Centre to check whether your cooling system needs modification.
- Submit to the legal requirements in your country (e.g. the fitting of a separate warning lamp).
- Certain vehicle components, e.g. the rear bumper, must be removed and reinstalled. The towing bracket securing bolts must be tightened using a torque wrench, and a power point must be connected to the vehicle's electrical system. The above-mentioned require specialized knowledge and tools.
- Figures in the illustration show the elevation value and the attachment points which must be considered if you are retrofitting a towing bracket.

WARNING

Towing brackets should be fitted by specialists.

WARNING (continued)

- **If the towing bracket is incorrectly installed, there is serious danger of accident.**
- **For your own safety, please observe the instructions provided by the manufacturer of the towing bracket.**

Caution

- If the power point is incorrectly installed, this could cause damage to the vehicle's electrical system.

Note

For the sportive finish, fitting a trailer bracket is not recommended due to the design of the bumpers. ■

Checking and refilling levels

Refuelling

The tank flap is released manually. The tank holds approximately 45 litres.

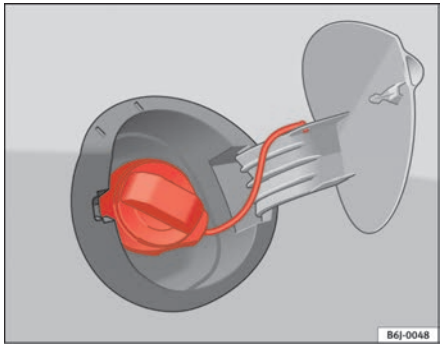

Fig. 121 Tank flap open

Unscrewing the tank cap

– Lift the lid.

– Grip the cap and then insert the key into the lock and rotate 180° to the left.

– Unscrew the cap, turning it anti-clockwise.

Closing the tank cap

– Screw the tank cap to the right, until the point of feeling a “click”.

– Turn the key in the lock, without releasing the cap in the clockwise direction 180°.

– Remove the key and close the flap until it clicks into place. The tank cap is secured with an anti-loss attachment

The tank flap is at the rear of the vehicle on the right.

If the automatic filler nozzle is operated correctly, it will switch itself off as soon as the tank is “full”. Never attempt to fill beyond this point, as this will fill the expansion chamber. Fuel may leak out if ambient conditions are warm.

The correct fuel grade for your vehicle is given on a sticker on the inside of the fuel tank flap.

WARNING

- **Fuel is highly inflammable and can cause serious burns and other injuries.**
  - **Never smoke or use any naked flame when filling the fuel tank of the vehicle, or a spare fuel canister, with fuel. This is an explosion hazard.**
  - **Follow legal requirements for the use of spare fuel canisters.**
  - **For safety reasons we do not recommend carrying a spare fuel canister in the vehicle. The canister could be damaged in an accident and leak.**
- **If, in exceptional circumstances, you have to carry a spare fuel canister, please observe the following points:**
  - **Never fill the spare fuel canister inside the vehicle or on it. An electrostatic charge could build up during filling, causing the fuel fumes to ignite. This may be fatally explosive. Always place the canister on the ground to fill it.**

WARNING (continued)

– **Insert the fuel nozzle into the mouth of the canister as far as possible.**

– **If the spare fuel canister is made of metal, the filling nozzle must be in contact with the canister during filling. This helps prevent an electrostatic charge building up.**

– **Never spill fuel in the vehicle or in the luggage compartment. Fuel vapours are explosive. Danger of death.**

Caution

- Fuel spills should be removed from the paintwork immediately.
- Never run the tank completely dry. An irregular fuel supply could cause misfiring. As a result, unburnt fuel could enter the catalytic converter and cause damage.

For the sake of the environment

Do not try to put in more fuel after the automatic filler nozzle has switched off; this may cause the fuel to overflow if it becomes warm. ■

Petrol

Petrol types

The correct petrol types are listed on a sticker inside the fuel tank flap.

Only **unleaded petrol, corresponding to the standard DIN EN 228**, may be used for vehicles with catalytic converters (EN = “European Standard”).

Fuel types are differentiated by the **octane rating**, e.g: 91, 95, 98 RON (RON = “Regulation Octane Number, unit for determining the knock resistance of petrol”). You may use petrol with a higher octane number than the one recommended for your engine. However, this has no advantage in terms of fuel consumption and engine power.

Caution

- Even one tankful of leaded fuel would permanently impair the efficiency of the catalytic converter.
- High engine speed and full throttle can damage the engine when using petrol with an octane rating lower than the correct grade for the engine.

For the sake of the environment

Just one full tank of leaded fuel would seriously impair the efficiency of the catalytic converter. ■

Petrol additives

Petrol additives improve the quality of the petrol.

The quality of the petrol influences running behaviour, performance and service life of the engine. For this reason, you should use good quality petrol containing additives. These additives will help to prevent corrosion, keep the fuel system clean and prevent deposits from building up in the engine.

If good quality petrol with additives is not available or engine problems occur, the required additives must be added during refuelling. ■

Diesel

Diesel*

Diesel fuel must correspond to DIN EN 590 (EN = “European standard”). It must have a cetane number (CN) of at least 51. The cetane number indicates the ignition quality of the diesel fuel.

Notes on filling with fuel ⇒ page 178. ■

Biodiesel*

The biodiesel fuel must comply with the DIN EN 14.214 (FAME) Standard.

- Biodiesel is a methylester obtained from rapeseed oil.
- DIN is a German abbreviation for “**D**eutsches **I**nstitut für **N**ormug e.V.”, the German standards institute.
- EN means **E**uropean **N**orm.
- FAME is the English abbreviation “**F**atty **A**cid **M**ethyl **E**ster”.

Your Authorised Service Centre can also be consulted to know if the vehicle has been prepared for biodiesel use.

Things to note about RME fuel (biodiesel)

- The performance of a vehicle using biodiesel maybe somewhat reduced.
- Fuel consumption of a vehicle using biodiesel may be slightly higher.
- RME fuel can be used in winter at temperatures down to approx. -10°C.
- At outside temperatures below -10°C, we recommend using winter diesel fuel.
- Your vehicle is prepared to be refilled with up to a maximum of 7% blended biodiesel.

Caution

- RME fuel can damage the fuel system in vehicles which are not suitably adjusted.
- If you decide to use biodiesel in your vehicle, please use only RME fuel which is DIN E 14,214 compliant.
- If you use biodiesel that does not meet the required standard, the fuel filter could become clogged.

Note

- In case of low exterior temperatures and a fuel biodiesel percentage of higher than 50%, an increase in gas emission may occur during operation of the independent heating.
- The fuel filter may become clogged when fuel is changed to biodiesel. For this reason, we recommend you that, when having run 300 or 400 km after a fuel change, the fuel filter change must also be done. Also note the instructions in the Inspection and Maintenance plan.
- If the vehicle is to remain parked for more than about two weeks, we recommend filling the fuel tank with biodiesel and driving about 50 km in order to avoid damage to the injection system. ■

Winter driving

Diesel can thicken in winter.

Winter-grade diesel

When using “summer-grade diesel fuel”, difficulties may be experienced under 0°C temperatures because the fuel thickens due to wax separation. For this reason, “winter-grade diesel fuel” is available in some countries during the cold months. It can be used at temperatures as low as -22°C. ▶

In countries with different climatic conditions the diesel fuel generally sold has different temperature characteristics. Check with an Authorised Service Centre or filling stations in the country concerned regarding the type of diesel fuels available.

Filter pre-heater

Your vehicle is fitted with a fuel filter pre-heater, making it well equipped for operation in winter. This ensures that the fuel system remains operational to approx. -24°C, provided you use winter-grade diesel which is safe to -15°C.

However, if the fuel has waxed to such an extent that the engine will not start at temperatures of under -24°C, simply place the vehicle in a warm place for a while.

Caution

Do not mix fuel additives ("thinners", or similar additives) with diesel fuel. ■

Working in the engine compartment

Safety instructions on working in the engine compartment

Any work carried out in the engine compartment or on the engine must be carried out cautiously.

Before starting any work on the engine or in the engine compartment:

1. Switch off the engine and remove the key from the ignition.
2. Apply the handbrake.
3. Move the gear stick to neutral or the selector lever to position P.
4. Wait for the engine to cool down.
5. Keep children away from the vehicle.
6. Raise the bonnet ⇒ page 183.

You should not do any work in the engine compartment unless you know exactly how to carry out the jobs and have the correct tools! Have the work carried out by a qualified workshop if you are uncertain.

All service fluids and consumables, e.g. coolant, engine oil, spark plugs and batteries, are being constantly developed. SEAT provides a constant flow of information to the Authorised Service Centres concerning modifications. For this reason, we recommend you to have service fluids and consumables replaced by an Authorised Service Centre. Please observe the relevant instructions ⇒ page 173. The engine compartment of any motor vehicle is a hazardous area ⇒ ⚠.

WARNING

All work on the engine or in the engine compartment, e.g. checking and refilling fluids, involves the danger of injury and scalding as well as the risk of accident or fire.

- **Never open the bonnet if you see steam, smoke or coolant escaping from the engine compartment. Otherwise, there is a risk of sustaining burns. Wait until no more steam or coolant is emitted, then allow the engine to cool before carefully opening the bonnet.**
- **Switch off the engine and remove the key from the ignition.**
- **Apply the handbrake and move the gear stick to neutral or selector lever to position P.**
- **Keep children away from the vehicle.**
- **Never touch hot engine parts. There is a risk of burns.**
- **Never spill liquids on a hot engine or on a hot exhaust gas system. This is a fire hazard.**

WARNING (continued)

- **Avoid causing short-circuits in the electrical system, particularly at the points where the jump leads are attached ⇒ page 228. The battery could explode.**
- **Never touch the radiator fan. It is temperature controlled and could start automatically, even when the engine has been switched off and the key removed from the ignition!**
- **Do not unscrew the cap on the expansion tank when the engine is hot. If the coolant is hot, the cooling system will be pressurised!**
- **Protect face, hands and arms by covering the cap with a large, thick cloth to protect against escaping coolant and steam.**
- **Always make sure you have not left any objects, such as cleaning cloths and tools, in the engine compartment.**
- **If you have to work underneath the vehicle, you must use suitable stands additionally to support the vehicle, there is a risk of accident!. A hydraulic jack is insufficient for securing the vehicle and there is a risk of injury.**
- **If any work has to be performed when the engine is started or with the engine running, there is an additional, potentially fatal, safety risk from the rotating parts, such as the drive belts, alternator, radiator fan, etc., and from the high-voltage ignition system. You should also observe the following points:**
  - **Never touch the electrical wiring of the ignition system.**
  - **Ensure that jewellery, loose clothing and long hair do not get trapped in rotating engine parts. Danger of death. Before starting any work remove jewellery, tie back and cover hair, and wear tight-fitting clothes.**
  - **Always think carefully about pressing the accelerator if a gear is engaged in either an automatic or manual gearbox. The vehicle could move, even if the handbrake is applied. Danger of death.**

WARNING (continued)

- **If work has to be carried out on the fuel system or on electrical components, you must observe the following safety notes in addition to the above warnings:**
  - **Always disconnect the battery. The vehicle must be unlocked when this is done, otherwise the alarm will be triggered.**
  - **Do not smoke.**
  - **Never work near naked flames.**
  - **Always have a fire extinguisher on hand.**

Caution

When changing or topping up service fluids, make absolutely certain that you fill the fluids into the correct reservoirs. Failure to observe this point will result in serious malfunctions and engine damage!

For the sake of the environment

Service fluids leaks are harmful to the environment. For this reason you should make regular checks on the ground underneath your vehicle. If you find spots of oil or other fluids, have your vehicle inspected in a qualified workshop. ■

Opening the bonnet

The bonnet is released from inside the vehicle.

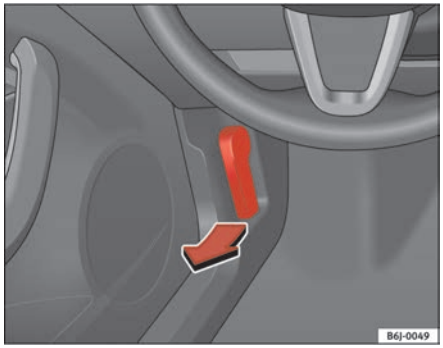

Fig. 122 Bonnet opening lever

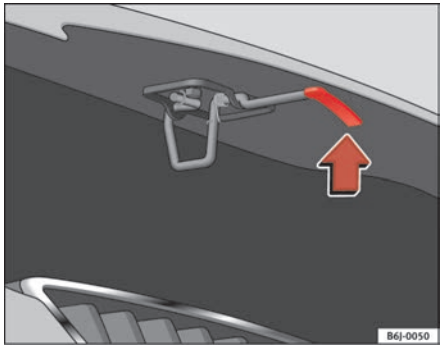

Fig. 123 Bonnet support rod

Before opening the bonnet ensure that the windscreen wipers are in rest position.

– To release the bonnet, pull the lever under the dashboard ⇒ fig. 122 in the direction indicated (arrow). The bonnet will be released by a spring action ⇒ ⚠.

– Lift the bonnet using the release lever (arrow) and open the bonnet.

– Release the bonnet stay and secure it in fixture designed for this in the bonnet.

⚠ WARNING

Hot coolant can scald!

- **Never open the bonnet if you see steam, smoke or coolant escaping from the engine compartment.**
- **Wait until no more steam, smoke or coolant is emitted from the bonnet, then carefully open the bonnet.**
- **When working in the engine compartment, always observe the safety warnings ⇒ page 181.** ■

Closing the bonnet

– Slightly raise the bonnet

– Release the bonnet stay and replace it in its support.

– At a height of about 30 cm let it fall so it is locked. ▶

If the bonnet does not close, do not press downwards. Open it once more and let it fall as before.

WARNING

If the bonnet is not closed properly, it could open while you are driving and completely obscure your view of the road. Risk of accident.

- **After closing the bonnet, always check that it is properly secured. The bonnet must be flush with the surrounding body panels.**
- **If you notice that the bonnet latch is not secured when the vehicle is moving, stop the vehicle immediately and close the bonnet properly. Risk of accident.** ■

Engine oil

Engine oil specifications

The engine oil used must conform with exact specifications.

Specifications

The engine comes with a special, high quality, multi grade oil that can be used in all seasons of the year except for those regions affected by extreme cold.

As the use of good quality oil is necessary for the correct operation and long service life of the engine, when it becomes necessary to replenish or change the oil, always use an oil that complies to the VW standards.

If it is not possible to find oil conforming to the VW standards then oil conforming to the ACEA or API standards with an appropriate viscosity at atmospheric temperature should be used instead. The use of this type of oil may have some repercussions on the performance of the engine for example, long starting time, increased consumption and a higher emission level.

If a top up is required then different oils may be mixed as long as they all conform to the VW standards.

The specifications (VW standards) set out in the following page should appear on the container of the service oil; the container will display together the different standards for petrol and diesel engines, the oil can be used for both types of engines. ■

Oil properties

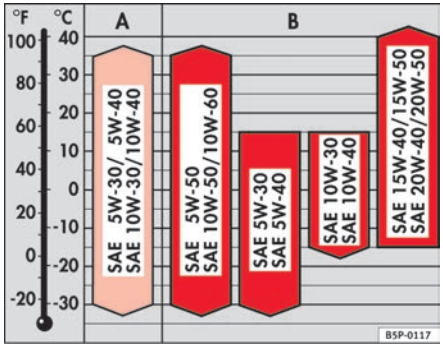

Fig. 124 Types of oil according to temperature

Viscosity

The viscosity class of the oil is selected according to the diagram.

When the ambient temperature falls outside the limits of the scale for a short period, an oil change is not required.

Engine type	Specification
Petrol	VW 501 01/ VW 502 00/ VW 504 00
Diesel	VW 505 00/ VW 505 01/ VW 507 00/ VW 506 01
Diesel Injector Pump [a)]	VW 505 01/ VW 507 00/ VW 506 01
Diesel Engines with Particulate filter (DPF)[a)]	VW 507 00

a) Only use recommended oils, otherwise you may damage the engine.

Mono-grade oil

Single grade oils are generally not suitable for all year round use, due to ranges of viscosity[11)].

These oils are only useful in a climate that is constantly very cold or very warm.

Engine oil additives

No type of additive should be mixed with the engine oil. The deterioration caused by these additives is not covered by the warranty.

11) Viscosity: oil density

Note

Before a long trip, we recommend finding an engine oil that conforms to the corresponding VW specifications and keeping it in the vehicle. This way, the correct engine oil will always be available for a top-up if needed. ■

Checking the engine oil level

The engine oil dipstick indicates the level of the oil.

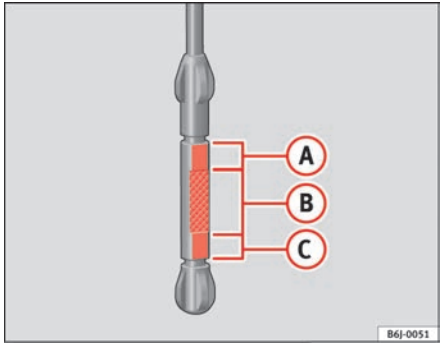

Fig. 125 Engine oil dipstick

Checking oil level

– Park the vehicle in a horizontal position.

– Briefly run the engine at idle speed until the service temperature is reached then stop.

– Wait two minutes.

– Pull out the dipstick. Wipe the dipstick with a clean cloth and insert it again, pushing it in as far as it will go.

– Then pull it out once more and check the oil level ⇒ fig. 125. Top up with engine oil if necessary.

Oil level in area (A)

- Do not add oil.

Oil level in area (B)

- Oil **can** be topped up. The indicated oil level should be **after** the zone (A)

Oil level in area (C)

- Oil **must** be topped up. The indicated oil level should be **after** in zone (A)

Depending on how you drive and the conditions in which the car is used, oil consumption can be up to 0.5 l/1,000 km. Oil consumption is likely to be higher for the first 5,000 km. For this reason the engine oil level must be checked at regular intervals, preferably when filling the tank and before a journey.

WARNING

Any work carried out in the engine compartment or on the engine must be carried out cautiously.

- **When working in the engine compartment, always observe the safety warnings ⇒ page 181.**

Caution

If the oil level is above the area (A) do not start the engine. This could result in damage to the engine and catalytic converter. Contact an Authorised Service Centre. ■

Topping up engine oil

Top up gradually with small quantities of oil.

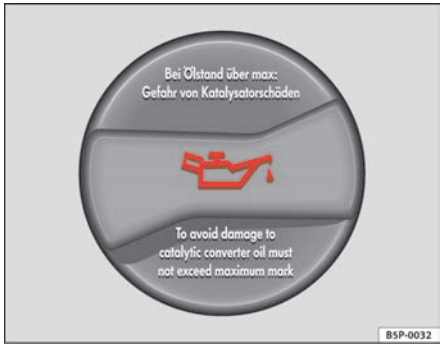

Fig. 126 In the engine compartment: Engine oil filler cap

Before opening the bonnet, read and observe the warnings ⇒ ⚠ in "Safety instructions on working in the engine compartment" on page 181.

– Unscrew cap from oil filler opening ⇒ fig. 126..

– Top-up oil in small amounts, using the correct oil.

– To avoid over-filling with engine oil, you should top-up using small quantities, wait a while and check the oil level before adding any more oil.

– As soon as the oil level is in area (B), carefully close the cap.

The position of the oil filler opening is shown in the corresponding engine compartment diagram ⇒ page 238.

Engine oil specification ⇒ page 184.

⚠ WARNING

Oil is highly inflammable! Ensure that no oil comes into contact with hot engine components when topping up.

Caution

If the oil level is above the area (A) do not start the engine. This could result in damage to the engine and catalytic converter. Contact a qualified workshop.

For the sake of the environment

The oil level must never be above area (A). Otherwise oil can be drawn in through the crankcase breather and escape into the atmosphere via the exhaust system. ■

Changing engine oil

The engine oil must be changed at the intervals given in the service schedule.

We recommend that you have the engine oil changed by an Authorised Service Centre.

The oil change intervals are shown in the Maintenance Programme.

⚠ WARNING

Only change the oil yourself if you have the specialist knowledge required! ▶

WARNING (continued)

- **Before opening the bonnet, read and observe the warnings ⇒ page 181, “Safety instructions on working in the engine compartment”.**
- **Wait for the engine to cool down. Hot oil may cause burn injuries.**
- **Wear eye protection to avoid injuries caused by splashes of oil.**
- **When removing the oil drain plug with your fingers, keep your arm horizontal to help prevent oil from running down your arm.**
- **Wash your skin thoroughly if it comes into contact with engine oil.**
- **Engine oil is poisonous! Used oil must be stored in a safe place out of the reach of children until it is disposed of.**

Caution

No additives should be used with engine oil. This could result in engine damage. Any damage caused by the use of such additives would not be covered by the factory warranty.

For the sake of the environment

- Because of the disposal problems, the necessary special tools and specialist knowledge required, we recommend that you have the engine oil and filter changed by an Authorised Service Centre.
- Never pour oil down drains or into the ground.
- Use a suitable container when draining the used oil. It has to be large enough to hold all the engine oil ■

Coolant

Coolant specifications

Coolant is a mixture of water and at least 40% coolant additive.

The cooling system must be filled with a mixture of water and at least 40 % of our coolant additive G 12++ or an additive with the specification TT-VW 774 G (known for its purple colour). This mixture gives the necessary frost protection down to -25°C and protects the alloy parts of the cooling system against corrosion. It also prevents scaling and raises the boiling point of the coolant.

The concentration of coolant must *always* be at least 40% - even if frost protection is not required.

If greater frost protection is required in very cold climates, the proportion of the antifreeze additive G 12++ can be increased. However, the percentage of coolant additives should not exceed 60%, as this would reduce the frost protection. It would also reduce the cooling effect. A mixture with 60% coolant additive will give frost protection to approx. -40°C.

WARNING

- **The coolant additive is toxic. There is a toxic risk. Always keep the coolant additive in the original container which should be stored out of the reach of children. The same applies to coolant which you have drained off.**
- **The coolant additive G 12++ must be added in sufficient quantities to provide anti-freeze protection at the coldest ambient temperatures that can be expected. At extremely cold ambient temperatures, the coolant could freeze, causing the vehicle to breakdown. As the heater would also not work in this situation, there is a risk of suffering exposure!**

Caution

- Other additives may give considerably inferior corrosion protection. The resulting corrosion in the cooling system can lead to a loss of coolant, causing serious damage to the engine.
- If additive G12++ is not available, this can be mixed with G12+, bearing in mind that the protection against corrosion will be reduced. ■

Checking the coolant level and topping up

The correct coolant level is important for fault-free functioning of the engine cooling system.

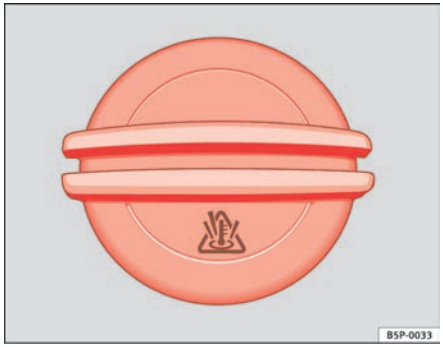

Fig. 127 In the engine compartment: Coolant expansion tank cap

Before opening the bonnet, read and observe the warnings ⇒ ⚠ in "Safety instructions on working in the engine compartment" on page 181.

Opening the coolant expansion tank

– Switch off the engine and allow it to cool.

– To prevent scalding, cover the cap on the expansion tank with a thick cloth and carefully unscrew the cap ⇒ ⚠.

Checking coolant level

– Look into the open coolant expansion tank and read off the coolant level.

– If the level is underneath the "MIN" mark, top up with coolant.

Topping up coolant

– Only use **new** coolant.

– Do not fill above the "MAX" mark.

Closing the coolant expansion tank

– Screw the cap on again *tightly*.

The position of the coolant expansion reservoir is shown in the corresponding engine compartment diagram ⇒ page 238.

Ensure the coolant conforms to the required specifications. Do not use a different type of additive if coolant additive G 12++ is not available. In this case use only water and bring the coolant concentration back up to the correct level as soon as possible by putting in the specified additive.

Always top up with *new* coolant.

Do not fill above the "MAX" mark. Otherwise the excess coolant will be forced out of the cooling system when the engine is hot.

The additive G 12++ can be mixed with the G 12+ in any proportion. ▶

WARNING

Any work carried out in the engine compartment or on the engine must be carried out cautiously.

- **When working in the engine compartment, always observe the safety warnings ⇒ page 181.**
- **When the engine is warm or hot, the cooling system is pressurised! Do not unscrew the cap on the expansion tank when the engine is hot. This is a burn injury risk.**

Caution

- If you notice a change in the colour of the liquid because it has been in use for a long time, it is recommended to change it, as it will have lost some of its properties and could cause damage to the vehicle.
- If a lot of coolant has been lost, wait for the engine to *cool down* before putting in cold coolant. This avoids damaging the engine. Large coolant losses are an indication of leaks in the cooling system. See a specialised workshop immediately and have the cooling system checked. Otherwise, there is a risk of engine damage. ■

Washer fluid and windscreen wiper blades

Topping up washer fluid

The water for cleaning the windscreen should always be mixed with washer fluid.

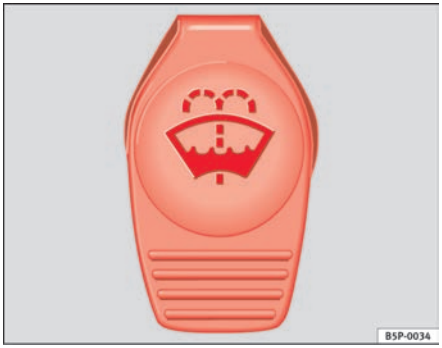

Fig. 128 In the engine compartment: Cap of windscreen washer fluid reservoir.

The **windscreen washer** and the **headlight washing system** are supplied with fluid from the windscreen washer fluid container in the engine compartment. The container holds approx. 2 litres; in vehicles with headlamp washers* it holds approx. 4.5 litres.

The reservoir is located on the right-hand side of the engine compartment.

Plain water is not enough to clean the windscreen and headlights. We recommend that you always add a product to the windscreen washer fluid. Approved windscreen cleaning products exist on the market with high detergent and anti-freeze properties, these may be added all-year-round. Please follow the dilution instructions on the packaging. ▶

WARNING

Any work carried out in the engine compartment or on the engine must be carried out cautiously.

- **When working in the engine compartment, always observe the safety warnings ⇒ page 181.**

Caution

- Never put radiator anti-freeze or other additives into the windscreen washer fluid.
- Always use approved windscreen cleansing products diluted as per instructions. If you use other washer fluids or soap solutions, the tiny holes in the fan-shaped nozzles could become blocked. ■

Changing windscreen wiper blades

If the windscreen wiper blades are in perfect condition, you will benefit from an improved visibility. Damaged wiper blades should be replaced immediately.

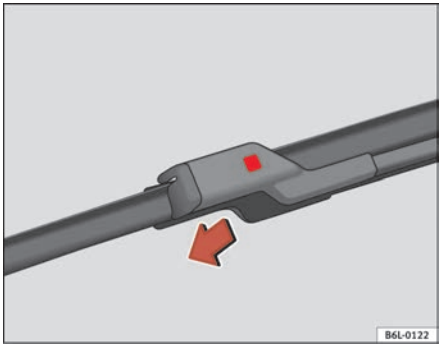

Fig. 129 Change windscreen wiper blade

To change the blades it is necessary to change the rest position of the wipers to the service position.

Service position (For changing wiper blades)

– Ensure that the wiper blades are not frozen.

– Turn ignition on and off and then (before approx. 9 sec.) move the windscreen wiper lever to the intermittent wipe position. The windscreen wipers will move to the service position.

Removing the wiper blade

– Lift the windscreen wiper arm. ▶

– Press on the securing tab.

– Extract the wiper blade from the wiper arm.

Fitting the wiper blade

– Insert the wiper blade onto the windscreen wiper arm until it clicks into place.

– Make sure that the blade faces down when fitting a blade with integrated deflector blade.

– Place the wiper arms to their initial position.

If the **windscreen wipers smear**, they should be replaced if they are damaged, or cleaned if they are soiled.

If this does not produce the desired results, the setting angle of the windscreen wiper arms might be incorrect. They should be checked by a qualified workshop and corrected if necessary.

WARNING

Do not drive unless you have good visibility through all windows!

- **Clean the windscreen wiper blades and all windows regularly.**
- **The wiper blades should be changed once or twice a year.**

Caution

- Damaged or dirty windscreen wipers could scratch the windscreen.
- Never use fuel, nail varnish remover, paint thinner or similar products to clean the windows. This could damage the windscreen wiper blades.
- Never move the windscreen wiper or windscreen wiper arm manually. This could cause damage.

Note

- The wiper arms, depending on the equipment, can only be moved to the service position when the bonnet is completely closed. ■

Changing the rear wiper blade

A good rear wiper blade is essential for clear rear vision. Damaged wiper blades should be replaced immediately.

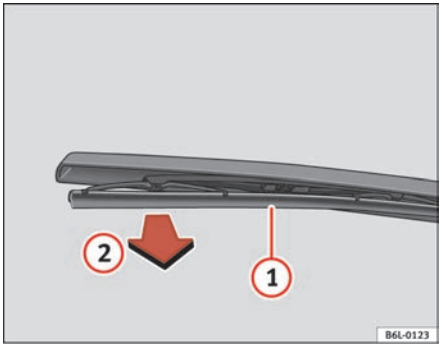

Fig. 130 Changing the rear window wiper blade

Removing the wiper blade

– Lift the rear wiper arm.

– Release the blade by pulling it in the direction of the arrow (2). ▶

Fitting the wiper blade

– Insert the wiper blade onto the windscreen wiper arm until it clicks into place.

Check the condition of the wiper blade regularly. Change as required.

If the **windscreen wiper scrapes**, it should be replaced if damaged, or cleaned if soiled.

If this is not sufficient, refer to a qualified workshop.

WARNING

Do not drive unless you have good visibility through all windows!

- **Clean the windscreen wiper blades and all windows regularly.**
- **The wiper blades should be changed once or twice a year.**

Caution

- A damaged or dirty window wiper could scratch the rear window.
- Never use fuel, nail varnish remover, paint thinner or similar products to clean the window.
- Never move the windscreen wiper by hand. This could cause damage. ■

Brake fluid

Checking the brake fluid level

The brake fluid is checked at the intervals given in the service schedule.

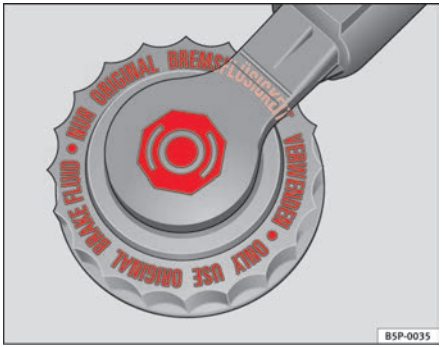

Fig. 131 In the engine compartment: Brake fluid reservoir cover

– Read off the fluid level at the transparent brake fluid reservoir. It should always be between the “MIN” and “MAX” marks.

The position of the brake fluid reservoir is shown in the corresponding engine compartment diagram ⇒ page 238. The brake fluid reservoir has a black and yellow cap.

The brake fluid level drops slightly when the vehicle is being used as the brake pads are automatically adjusted as they wear. ▶

However, if the level goes down noticeably in a short time, or drops below the "MIN" mark, there may be a leak in the brake system. A display on the instrument panel will warn you if the brake fluid level is too low ⇒ page 57.

WARNING

Before opening the bonnet to check the brake fluid level, read and observe the warnings ⇒ page 181. ■

Changing the brake fluid

The Maintenance Program indicates the brake fluid change intervals.

We recommend that you have the brake fluid changed by an Authorised Service Centre.

Before opening the bonnet, please read and follow the warnings ⇒ ⚠ in "Safety instructions on working in the engine compartment" on page 181 in section "Safety notes for working in the engine compartment".

Brake fluid absorbs moisture. In the course of time, it will absorb water from the ambient air. If the water content in the brake fluid is too high, the brake system could corrode. This also considerably reduces the boiling point of the brake fluid. Heavy use of the brakes may then cause a vapour lock which could impair the braking effect.

It is important that you use only brake fluid compliant with the US standard FMVSS 116 DOT 4. We recommend the use of Genuine SEAT brake fluid.

WARNING

Brake fluid is poisonous. Old brake fluid impairs the braking effect.

WARNING (continued)

- **Before opening the bonnet to check the brake fluid level, read and observe the warnings ⇒ page 181.**
- **Brake fluid should be stored in the closed original container in a safe place out of reach of children. There is a toxic risk.**
- **Complete the brake fluid change according to the Maintenance Program. Heavy use of the brakes may cause a vapour lock if the brake fluid is left in the system for too long. This would seriously affect the efficiency of the brakes and the safety of the vehicle. This may cause an accident.**

Caution

Brake fluid could damage the paintwork. Wipe off any brake fluid from the paintwork immediately.

For the sake of the environment

Brake fluid must be drained and disposed of in the proper manner observing environmental regulations. ■

Battery

Warnings on handling the battery

	Wear eye protection
	Battery acid is very corrosive and caustic. Wear protective gloves and eye protection!
	Fires, sparks, naked lights and smoking are prohibited!
	A highly explosive mixture of gases is released when the battery is under charge.
	Keep children away from acid and batteries!

WARNING

Always be aware of the danger of injury and chemical burns as well as the risk of accident or fire when working on the battery and the electrical system:

- **Wear eye protection. Protect your eyes, skin and clothing from acid and particles containing lead.**
- **Battery acid is very corrosive and caustic. Wear protective gloves and eye protection. Do not tilt the batteries. This could spill acid through the vents. Rinse battery acid from eyes immediately for several minutes with clear water. Then seek medical care immediately. Neutralize any acid splashes on the skin or clothing with a soapy solution, and rinse off with plenty of water. If acid is swallowed by mistake, consult a doctor immediately.**
- **Fires, sparks, naked lights and smoking are prohibited. When handling cables and electrical equipment, avoid causing sparks and electrostatic**

WARNING (continued)

charge. Never short the battery terminals. High-energy sparks can cause injury.

- **A highly explosive mixture of gases is released when the battery is under charge. The batteries should be charged in a well-ventilated room only.**
- **Keep children away from acid and batteries.**
- **Before working on the electrical system, you must switch off the engine, the ignition and all consumers. The negative cable on the battery must be disconnected. When a light bulb is changed, you need only switch off the light.**
- **Deactivate the anti-theft alarm by unlocking the vehicle before you disconnect the battery! The alarm will otherwise be triggered.**
- **When disconnecting the battery from the vehicle electrical system, disconnect first the negative cable and then the positive cable.**
- **Switch off all electrical consumers before reconnecting the battery. Reconnect first the positive cable and then the negative cable. Never reverse the polarity of the connections. This could cause an electrical fire.**
- **Never charge a frozen battery, or one which has thawed. This could result in explosions and chemical burns. Always replace a battery which has frozen. A flat battery can freeze at temperatures around 0°C.**
- **Ensure that the vent hose is always connected to the battery.**
- **Never use a defective battery. This may be fatally explosive. Replace a damaged battery immediately.**

Caution

- Never disconnect the battery if the ignition is switched on or if the engine is running. This could damage the electrical system or electronic components.
- Do not expose the battery to direct sunlight over a long period of time, as the intense ultraviolet radiation can damage the battery housing.

- If the vehicle is left standing in cold conditions for a long period, protect the battery from frost. If it “freezes” it will be damaged. ■

Checking the electrolyte level

The electrolyte level should be checked regularly in high-mileage vehicles, in hot countries and in older batteries.

– Open the engine bonnet and the battery cover ⇒ ⚠ in “Safety instructions on working in the engine compartment” on page 181 ⇒ ⚠ in “Warnings on handling the battery” on page 195.

– Check the colour display in the "magic eye" on the top of the battery.

– If there are air bubbles in the window, tap the window gently until they disperse.

The position of the battery is shown in the corresponding engine compartment diagram ⇒ page 238.

The round window (“magic eye”) on the top of the battery changes colour, depending on the charge level and electrolyte level of the battery.

If the colour in the window is **colourless or bright yellow**, the electrolyte level of the battery is too low. Have the battery checked by a qualified workshop.

The colours green and black are used by the workshops for diagnostic purposes. ■

Charging and changing the vehicle battery

The battery is maintenance-free and is checked during the inspection service. All work on the vehicle battery requires specialist knowledge.

If you often drive short distances or if the vehicle is not driven for long periods, the battery should be checked by a qualified workshop between the scheduled services.

If the battery has discharged and you have problems starting the vehicle, the battery might be damaged. If this happens, we recommend you have the vehicle battery checked by an Authorised Service Centre where it will be recharged or replaced.

Charging the battery

The vehicle battery should be charged by a qualified workshop only, as batteries using special technology have been installed and they must be charged in a controlled environment.

Replacing a vehicle battery

The battery has been developed to suit the conditions of its location and has special safety features.

Genuine SEAT batteries fulfil the maintenance, performance and safety specifications of your vehicle.

⚠ WARNING

- **We recommend you use only maintenance-free or cycle free leak-proof batteries which comply with the standards T 825 06 and VW 7 50 73. This standard applies as of 2001.**
- **Before starting any work on the batteries, you must read and observe the warnings ⇒ ⚠ in “Warnings on handling the battery” on page 195.** ▶

For the sake of the environment

Batteries contain toxic substances such as sulphuric acid and lead. They must be disposed of appropriately and must not be disposed of with ordinary household waste. ■

Wheels

General notes

Avoiding damage

– If you have to drive over a kerb or similar obstacle, drive very slowly and as near as possible at a right angle to the kerb.

– Keep grease, oil and fuel off the tyres.

– Inspect the tyres regularly for damage (cuts, cracks or blisters, etc.). Remove any foreign objects embedded in the treads.

Storing tyres

– Mark tyres when you remove them to indicate the direction of rotation. This ensures you will be able to install them correctly when you replace them.

– When removed, the wheels and/or tyres should be stored in a cool, dry and preferably dark location.

– Store tyres in a vertical position if they are not fitted on wheel rims.

New tyres

New tyres have to be run in ⇒ page 153.

The tread depth of new tyres may vary, according to the type and make of tyre and the tread pattern.

Concealed damage

Damage to tyres and rims is often not readily visible. If you notice unusual vibrations or the car pulling to one side, this may indicate that one of the tyres is damaged. The tyres should be checked immediately by an Authorised Service Centre.

Tyres with directional tread pattern

An arrow on the tyre sidewall indicates the direction of rotation on tyres with directional tread. Always observe the direction of rotation indicated when fitting the wheel. This guarantees optimum grip and helps to avoid aquaplaning, excessive noise and wear.

WARNING

- **New tyres do not have maximum grip in the first 500 km. Drive particularly carefully to avoid risk of accident.**
- **Never drive with damaged tyres. This may cause an accident.**
- **If you notice unusual vibration or if the vehicle pulls to one side when driving, stop the vehicle immediately and check the tyres for damage.** ■

Checking tyre pressure

The correct tyre pressure can be seen on the sticker on the inside of the tank flap.

1. Read the required tyre inflation pressure from the sticker. The values refer to Summer tyres. ▶

2. The tyre pressures should only be checked when the tyres are cold. The slightly raised pressures of warm tyres must not be reduced.

3. Adjust the tyre pressure to the load you are carrying.

Tyre pressure

The correct tyre pressure is especially important at high speeds. The pressure should therefore be checked at least once a month and before starting a journey.

WARNING

A tyre can easily burst if the pressure is too low, causing an accident!

- **At continuously high speeds, a tyre with insufficient pressure flexes more. In this way it becomes too hot, and this can cause tread separation and tyre blow-out. Always observe the recommended tyre pressures.**
- **If the tyre pressure is too low or too high, the tyres will wear prematurely and the vehicle will not handle well. Risk of accident!**

For the sake of the environment

Under-inflated tyres will increase fuel consumption. ■

Tyre service life

The service life of tyres is dependent on tyre pressure, driving style and fitting.

Fig. 132 Tyre tread wear indicators

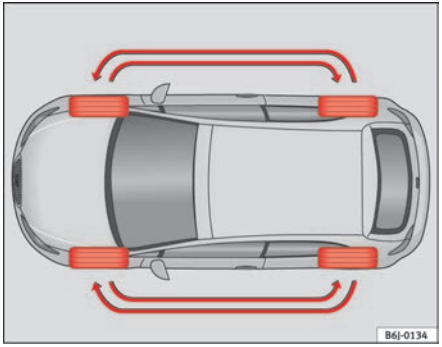

Fig. 133 Diagram for changing wheels

Wear indicators

The original tyres on your vehicle have 1.6 mm high “tread wear indicators” ⇒ page 198, fig. 132, running across the tread. Depending on the make, there will be six to eight of them evenly spaced around the tyre. Markings on the tyre sidewall (for instance the letters “TWI” or other symbols) indicate the positions of the tread wear indicators. The minimum tread depth required by law is 1.6 mm (measured in the tread grooves next to the tread wear indicators). Worn tyres must be replaced. Different figures may apply in export countries ⇒ ⚠.

Tyre pressure

Incorrect tyre pressure causes premature wear and could cause tyre blow-out. For this reason, the tyre pressure should be checked at least once per month ⇒ page 197.

Driving style

Fast cornering, heavy acceleration and hard braking all increase tyre wear.

Changing wheels around

If the front tyres are worn considerably more than the rear ones it is advisable to change them around as shown ⇒ page 198, fig. 133. All the tyres will then last for about the same time.

Wheel balance

The wheels on new vehicles are balanced. However, various factors encountered in normal driving can cause them to become unbalanced, which results in steering vibration.

Unbalanced wheels should be rebalanced, as they otherwise cause excessive wear on steering, suspension and tyres. A wheel must also be rebalanced when a new tyre is fitted.

Incorrect wheel alignment

Incorrect wheel alignment causes excessive tyre wear, impairing the safety of the vehicle. If tyres show excessive wear, you should have the wheel alignment checked by an Authorised Service Centre.

⚠ WARNING

There is a serious danger of accidents if a tyre bursts during driving!

- **The tyres must be replaced at the latest when the tread is worn down to the tread wear indicators. Failure to do so could result in an accident. Worn tyres do not grip well at high speeds on wet roads. There is also a greater risk of “aquaplaning”**
- **At continuously high speeds, a tyre with insufficient pressure flexes more. This causes it to overheat. This can cause tread separation and tyre blow-out. Risk of accident. Always observe the recommended tyre pressures.**
- **If tyres show excessive wear, you should have the running gear checked by an Authorised Service Centre.**
- **Keep chemicals such as oil, fuel and brake fluid away from tyres.**
- **Damaged wheels and tyres must be replaced immediately!**

For the sake of the environment

Under-inflated tyres will increase fuel consumption. ■

New tyres and wheels

New tyres and wheels have to be run-in.

The tyres and wheel rims are an essential part of the vehicle's design. The tyres and rims approved by SEAT are specially matched to the characteristics of the vehicle and make a major contribution to good road holding and safe handling ⇒ ⚠.

Tyres should be replaced at least in pairs and not individually (i.e. both front tyres or both rear tyres together). A knowledge of tyre designations makes it ▶

easier to choose the correct tyres. Radial tyres have the tyre designations marked on the sidewall, for example:

195/65 R15 91T

This contains the following information:

195 Tyre width in mm
65 Height/width ratio in %
R Tyre construction: **R**adial
15 Rim diameter in inches
91 Load rating code
T Speed rating

The tyres could also have the following information:

- A direction of rotation symbol
- "Reinforced" denotes heavy-duty tyres.

The manufacturing date is also indicated on the tyre sidewall (possibly only on the inner side of the wheel).

"DOT ... 1103 ..." means, for example, that the tyre was produced in the 11th week of 2003.

We recommend that work on tyres and wheels is carried out by an Authorised Service Centre. They are familiar with the procedure and have the necessary special tools and spare parts as well as the proper facilities for disposing of the old tyres.

Any Authorised Service Centre has full information on the technical requirements when installing or changing tyres, wheels or wheel trims.

WARNING

- **We recommend that you use only wheels and tyres which have been approved by SEAT for your model. Failure to do so could impair vehicle handling. Risk of accident.**

WARNING (continued)

- **Avoid running the vehicle on tyres that are more than six years old. If you have no alternative, you should drive slowly and with extra care at all times.**
- **Never use old tyres or those with an unknown "history of use".**
- **If wheel trims are retrofitted, you must ensure that the flow of air to the brakes is not restricted. This could cause them to overheat.**
- **All four wheels must be fitted with radial tyres of the same type, size (rolling circumference) and the same tread pattern.**

For the sake of the environment

Old tyres must be disposed of according to the laws in the country concerned.

Note

- For technical reasons, it is not generally possible to use the wheels from other vehicles. This can also apply to wheels of the same model. The use of wheels or tyres which have not been approved by SEAT for use with your model may invalidate the vehicle's type approval for use on public roads.
- If the spare tyre is not the same as the tyres that are mounted on the vehicle - for example with winter tyres - you should only use the spare tyre for a short period of time and drive with extra care. Refit the normal road wheel as soon as possible. ■

Wheel bolts

Wheel bolts must be tightened to the correct torque.

The design of wheel bolts is matched to the rims. If different wheel rims are fitted, the correct wheel bolts with the right length and correctly shaped bolt ▶

heads must be used. This ensures that wheels are fitted securely and that the brake system functions correctly.

In certain circumstances, you may not use wheel bolts from a different car - even if it is the same model ⇒ page 173.

WARNING

If the wheel bolts are not tightened correctly, the wheel could become loose while driving. Risk of accident.

- **The wheel bolts must be clean and turn easily. Never apply grease or oil to them.**
- **Use only wheel bolts which belong to the wheel.**
- **If the prescribed torque of the wheel bolts is too low, they could loosen whilst the vehicle is in motion. Risk of accident! If the tightening torque is too high, the wheel bolts and threads can be damaged.**

Caution

The prescribed torque for wheel bolts for steel and alloy wheels is 120 Nm. ■

Winter tyres

Winter tyres will improve the vehicles handling on snow and ice.

In winter conditions winter tyres will considerably improve the vehicles handling. The design of summer tyres (width, rubber compound, tread pattern) gives less grip on ice and snow.

Winter tyres must be inflated to a **pressure** 0.2 bar higher than the pressures specified for summer tyres (see sticker on tank flap).

Winter tyres must be fitted on all four wheels.

Information on permitted **winter tyre sizes** can be found in the vehicle's registration documents. Use only radial winter tyres. All tyre sizes listed in the vehicle documentation also apply to winter tyres.

Winter tyres lose their effectiveness when the tread is worn down to a depth of 4 mm.

The speed rating code ⇒ page 199, “New tyres and wheels” determines the following **speed limits** for the winter tyres: ⇒ ⚠

Q max. 160 km/h
S max. 180 km/h
T max. 190 km/h
H max. 210 km/h

In some countries, vehicles which can exceed the speed rating of the fitted tyre must have an appropriate sticker in the driver's field of view. These stickers are available from your Authorised Service Centre. The legal requirements of each country must be followed.

Do not have winter tyres fitted for unnecessarily long periods. Vehicles with summer tyres handle better when the roads are free of snow and ice.

If you have a flat tyre, please refer to the notes on the spare wheel ⇒ page 199, “New tyres and wheels”.

WARNING

The maximum speed for the winter tyres must not be exceeded. Otherwise, this could lead to tyre damage and thus, an accident risk.

For the sake of the environment

Fit your summer tyres in good time. They are quieter, do not wear so quickly and reduce fuel consumption. ■

Snow chains

Snow chains may be fitted only to the front wheels, and only for the following tyres:

175/70R14 185/60R15	Chains with links not exceeding 15 mm (including the chain closure)
215/45R16	Chains with links not exceeding 9 mm (including the chain closure)
215/40R17	Chains with links not exceeding 7mm (including the chain closure)

Remove wheel hub covers and trim rings before fitting snow chains. For safety reasons cover caps, available in any Authorised Service Centre, must then be fitted over the wheel bolts.

WARNING

Snow chains should be correctly tightened in accordance with the manufacturer's instructions. This will prevent the chains coming into contact with the wheel housing.

Caution

You must remove the snow chains to drive on roads which are free of snow. Otherwise they will impair handling, damage the tyres and wear out very quickly.

Note

In some countries, the speed limit for using snow chains is 50 km/h. The legal requirements of the country should be followed. ■

If and when

Vehicle tools, spare wheel

Vehicle Tools

The vehicle onboard tools are located under the floor panel in the luggage compartment.

– Lift floor panel

– Take the onboard tools out of the vehicle.

The tool kit includes:

- Jack*
- Hook to remove integral* trim and screw caps.
- Box spanner for wheel bolts*
- Reversible screwdriver with handle (including hexagonal interior) for the wheel bolts. The screwdriver is a combination tool.
- Towing ring*
- Adapter for the anti-theft wheel bolts*

Some of the items listed are only provided in certain models / model years, or are optional extras.

WARNING

- **Do not use the hexagonal socket in the screwdriver handle to tighten the wheel bolts as with this it is not possible to tighten the bolts to the required torque. Risk of accident.**

WARNING (continued)

- **The jack supplied by the factory is only designed for changing wheels on this model. On no account attempt to use it for lifting heavier vehicles or other loads. Risk of injury.**
- **Use the jack only on a firm, level ground.**
- **Never start the engine when the vehicle is on the jack. Risk of accident.**
- **If work is to be carried out underneath the vehicle, this must be secured by suitable means. Otherwise, there is a risk of injury.** ■

Spare wheel (emergency wheel)*

The compact temporary spare wheel (emergency wheel) must be used during indispensable time.

The temporary spare wheel is stored under the floor panel in the luggage compartment and is attached by a thumbnut.

How to use the compact temporary spare wheel

If you ever have a punctured tyre or loss of pressure, the emergency wheel is only intended for temporary use until you reach a workshop. Change it for a duty wheel as soon as possible.

Please note the following restrictions when using the compact temporary spare wheel. This spare wheel has been specially designed for your vehicle, thus, it cannot be changed with the spare wheel from another vehicle.

No other type of tyre (normal summer or winter tyre) may be fitted on the compact temporary spare wheel rim. ▶

Snow chains

For technical reasons, snow chains must **not** be used on the compact temporary spare wheel.

If you have a puncture on one of the *front wheels* when using snow chains, fit the compact temporary spare in place of one of the rear wheels. You can then attach the snow chains to the wheel taken from the rear and use this wheel to replace the punctured front wheel.

WARNING

- **The tyre pressures must be checked and corrected as soon as possible.**
- **Do not drive faster than 80 km/h. Higher speeds can cause an accident.**
- **Avoid heavy acceleration, hard braking and fast cornering. Risk of accident.**
- **Never use two or more compact spare tyres at the same time, risk of accident.**
- **No other type of tyre (normal summer or winter tyre) may be fitted on the compact temporary spare wheel rim.** ■

Tyre repair kit*

The tyre repair kit (for vehicles not including a spare wheel) is stored under the floor panel in the luggage compartment.

Your vehicle is equipped with the Tyre Mobility System “Tyre repair kit”.

The tyre repair kit consists of a container with sealing compound to repair the puncture and a **compressor** to generate the required tyre pressure. The kit will reliably seal punctures up to a size of about 4 mm caused by the penetration of a foreign body into the tyre.

Note

- Seek professional assistance if the repair of a tyre puncture is not possible with the sealing compound. ■

Wheel change

Preparation work

What you must do before changing a wheel.

– If you have a flat tyre or puncture, park the vehicle as far away from the flow of traffic as possible. Choose a location that is as level as possible.

– All passengers should leave the vehicle. They should wait in a safe area (for instance behind the roadside crash barrier).

– Switch the engine off. Switch the hazard warning lights on and place the triangles.

– Apply the **handbrake** firmly.

– Engage the **first gear**, or put the selector lever to position **P** for those vehicles with an automatic gearbox.

– If you are towing a trailer, unhitch it from your vehicle.

– Take the **vehicle tools** and the **spare wheel** out of the luggage compartment. ▶

WARNING

Switch on the hazard warning lights on and place the warning triangles in position. This is for your own safety and also warns other road users.

Caution

If you have to change the wheel on a slope, it is essential to lock the parallel wheel and on the same axle as that to be changed, with a wedge or similar in order to immobilise the vehicle.

Note

Please observe legal requirements when doing so. ■

Changing a wheel

Change the wheel as described below

– Remove the **hub caps or the integral trim**.

– Slacken the **wheel bolts**.

– **Raise** the car with the jack in the corresponding zone

– **Remove** the wheel and then **put on** the spare wheel

– **Lower** the vehicle.

– Tighten the wheel bolts **firmly** with the box spanner

– Replace the **hub cap**. ■

After changing a wheel

After changing the wheel there are still tasks to complete.

– Put the tools and jack back in the luggage compartment.

– Place the wheel with the defective tyre in the luggage compartment and secure it.

– Check the tyre pressure of the newly fitted tyre as soon as possible.

– Have the tightening torque of the wheel bolts checked as soon as possible with a torque wrench. The prescribed torque must be 120 Nm.

Note

- If you notice that the wheel bolts are corroded and difficult to turn when changing a wheel, they must be replaced before having the wheel bolt torque checked.
- For your safety, drive at moderate speeds until the wheel bolt torque has been checked. ■

Wheel covers*

The wheel covers must be removed for access to the wheel bolts

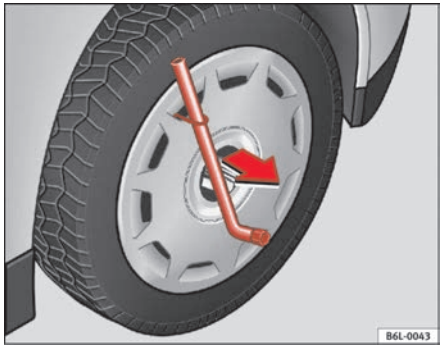

Fig. 134 Remove the complete hub cap

Removing

– Remove the wheel cover using the wire hook. ⇒ fig. 134.

– Hook this into one of the cut-outs of the wheel cover.

Fitting

– Fit the wheel cover onto the wheel rim by pressing it firmly. Put pressure initially on the point of the cut-out for the valve. Next fit the rest of the hubcap ■

Loosening the wheel bolts

The wheel bolts must be loosened before raising the vehicle.

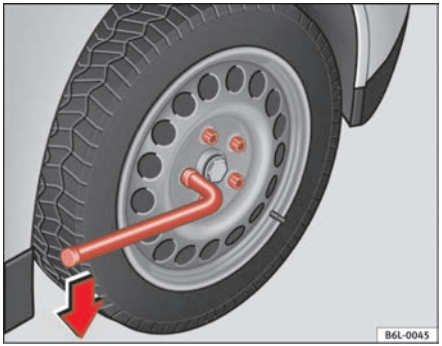

Fig. 135 Changing the wheel: loosen the wheel bolts

Loosening

– Fit the **box spanner** as far as it will go over the wheel bolt.

– Grasp the box spanner by the end turn it about one full turn to the **left** ⇒ fig. 135.

Tightening

– Fit the box spanner as far as it will go over the wheel bolt.

– Grasp the box spanner close to the end and turn the bolt to the right until it is secured.

– An adapter is required to unscrew or tighten the anti-theft wheel bolts. ▶

WARNING

Loosen the wheel bolts only about one turn before raising the vehicle with the jack, loosening the wheel bolts more than one turn can result in an accident.

Note

- Do not use the hexagonal socket in the screwdriver handle to loosen or tighten the wheel bolts.
- If the wheel bolt is very tight, you may be able to loosen it by pushing down the end of the spanner carefully with your foot. Hold on to the vehicle for support and take care not to slip. ■

Raising the vehicle

In order to remove the wheel, the vehicle must be raised with a jack.

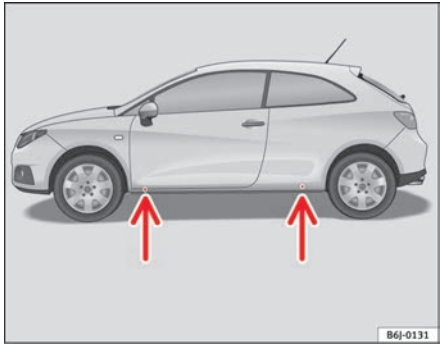

Fig. 136 The jacking points

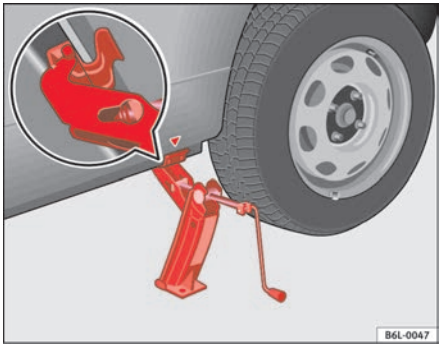

Fig. 137 Fitting the jack

– Locate the jacking point under the door sill closest to the wheel to be changed ⇒ fig. 136.

– Place the jack under the jacking point and turn the crank until the arm of the jack is directly below the vertical rib under the door sill.

– Align the jack so that the arm of the jack fits around the rib under the door sill and the movable base plate of the jack is flat on the ground ⇒ fig. 137.

– Raise the jack until the defective wheel is just clear of the ground.

Recesses at the front and rear of the door sills mark the jacking points ⇒ fig. 136. A position has been made for each wheel. Do not fit the jack anywhere else.

An **unstable surface** under the jack may cause the vehicle to slip off the jack. Therefore, the jack must be fitted on solid ground offering good support. Use ▶

a large and stable base, if necessary. On a hard, slippery surface (such as tiles) use a rubber mat or similar to prevent the jack from slipping.

WARNING

- **Take all precautions so that the base of the jack does not slip. Failure to do so could result in an accident.**
- **The vehicle can be damaged if the jack is not applied at the correct jacking points. There is also a risk of injury since the jack can slip off suddenly if it is not properly engaged.** ■

Removing and fitting the wheel

For removal and fitting the wheel, the following tasks must be completed.

Fig. 138 Changing the wheel: Hexagonal socket in screwdriver handle to turn the wheel bolts

After loosening the wheel bolts and raising the vehicle with the jack, cange the wheel as described below:

Removing a wheel

– Unscrew the bolts using the **hexagonal tool** in the handle of the screwdriver (vehicle tool) and place them on a clean surface ⇒ fig. 138.

Fitting a wheel

– Screw in the wheel bolts and tighten them lightly using the hexagonal socket in the screwdriver handle.

The wheel bolts should be clean and easily screwed. Before fitting the spare wheel, inspect the wheel condition and hub mounting surfaces. These surfaces must be clean before fitting the wheel.

The hexagonal socket in the screwdriver handle makes it easier to turn the wheel bolts. The reversible screwdriver blade should be removed when the tool is used for this purpose.

If tyres with a specific direction of rotation are fitted, note the direction of rotation.

Note

Do not use the hexagonal socket in the screwdriver handle to loosen or tighten the wheel bolts. ■

Anti-theft wheel bolts*

A special adapter is required to turn the anti-theft wheel bolts. This is found in the tool box.

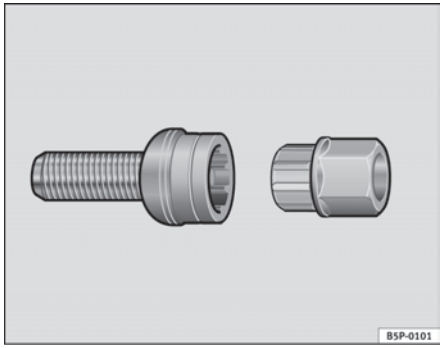

Fig. 139 Anti-theft wheel bolt

- Insert the adapter onto the wheel bolt and push it on as far as it will go ⇒ fig. 139.
- Fit the box spanner as far as it will go over the adapter.
- Loosen or tighten the wheel bolt as appropriate.

Error code

The code number of the anti-theft wheel bolt is stamped onto the front part of the adaptor.

The code number should be noted and kept in a safe place, as it is only by using the code number that a duplicate adaptor can be obtained from an Authorised Service Centre. ■

Tyres with directional tread pattern

Tyres with directional tread pattern must be fitted so that they rotate in the correct direction.

A directional tread pattern can be identified by arrows on the sidewall that point in the direction of rotation. Always note the direction of rotation indicated when fitting the wheel. This is important so that these tyres can give maximum grip and avoid excessive noise, tread wear and aquaplaning.

If, in an emergency, you have to fit the spare wheel so it rotates in the wrong direction, you must drive extremely carefully. The tyre will not give optimum performance. This is particularly important when driving on wet roads.

To benefit from the advantages of tyres with this type of tread pattern, the defective tyre should be replaced as soon as possible so that all tyres again rotate in the correct direction. ■

Tyre repair kit (Tyre-Mobility-System)*

General information and safety notes

Your vehicle is equipped with a tyre repair kit: the **Tyre Mobility System**.

In the event of a tyre puncture, a **sealing compound** and an **air compressor** are located in the luggage compartment under the floor panel.

The Tyre Mobility System will reliably seal punctures caused by the penetration of a foreign body of up to about 4 mm in diameter.

It is not necessary to remove the foreign body from the tyre.

Instructions for the sealing compound are located on the sealing compound container. ▶

It also contains the instructions for using the compressor.

WARNING

- **Do not attempt to repair a puncture with the sealing compound if the tyre has been damaged by driving the car after the tyre has lost its air.**
- **Always observe warnings and follow safety instructions concerning compressor and sealing compound carefully.**
- **Do not drive faster than 80 km/h, avoid heavy acceleration, hard braking and fast cornering.**
- **Tyres which have been repaired with sealing compound are only suitable for temporary use over a short period. Therefore, please drive carefully to the next available qualified workshop.**

For the sake of the environment

- Used sealing compound containers should be disposed of at a proper facility.
- The bottle containing sealing compound must be recycled in its correct container.

Note

Seek professional assistance if the repair of a tyre puncture is not possible with the sealing compound. ■

What to do first

Certain steps must be taken before repairing a tyre.

– If you have a flat tyre or puncture, park the vehicle as far away from the flow of traffic as possible.

– Apply the **handbrake** firmly.

– Engage **first gear**, or put the selector lever to position **P**.

– All passengers should **leave** the vehicle. They should wait in a safe area (for instance behind the roadside crash barrier).

– Check whether a repair is possible using the Tyre Mobility System “General information and safety notes.”

– Unscrew inflation cap from the affected wheel.

– Take the **tyre repair kit** out of the luggage compartment.

WARNING

Switch on the hazard warning lights on and place the warning triangles in position. This is for your own safety and also warns other road users.

Caution

Take special care if you have to repair a tyre on a slope.

Note

- Please observe legal requirements when doing so.
- Remember to replace the sealing compound as soon as possible. ■

Tyre repair

The following sections describe the procedures for repairing a tyre.

Using the sealing compound

– The instructions on the container give detailed information on how to use the sealing compound.

Inflating the tyre.

– Remove the air compressor and hose from the container.

– Screw the retaining nut onto the valve.

– Plug the compressor cable into a 12 volt power point.

– Turn on compressor and monitor the pressure shown on the pressure gauge.

Completing the repair

– Remove the compressor hose from the valve.

– Fit the valve cap.

– Unplug the compressor from the socket.

– Return all tools to their proper storing location.

Note

The compressor should never be allowed to run for longer than 6 minutes. ■

Fuses

Changing a fuse

Blown fuses must be replaced

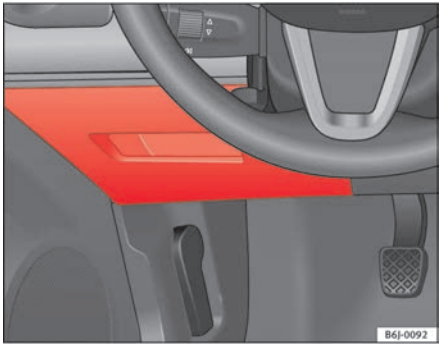

Fig. 140 Fuses in the dash panel

Fuse cover

– Switch off the ignition and its failed electrical component.

– Identify the fuse corresponding to the damaged electric consumer ⇒ page 213.

– Take the plastic clip from inside the fuse cover, fit it onto the blown fuse and pull the fuse out.

– Replace the blown fuse (which will have a melted metal strip) with a new fuse of the same ampere rating.

The individual electrical circuits are protected by fuses. The fuses are located behind a cover at the left-hand end of the dash panel. When the steering wheel is on the right, the fuses are on the right-hand side of the instrument panel, behind a cover.

The electric windows are protected by **circuit breakers**. These reset automatically after a few seconds when the overload (caused for example by frozen windows) has been corrected.

Fuses colour code

Colour	Amperes
Beige	5
Brown	7,5
Red	10
Blue	15
Yellow	20
Natural (white)	25
Green	30

WARNING

Never "repair" damaged fuses and never replace them with fuses with a higher rating. Failure to comply could result in fire. This could also cause damage to other parts of the electrical system.

Note

- If a newly replaced fuse blows again after a short time, the electrical system must be checked by a qualified workshop as soon as possible.
- If you replace a fuse with higher-rating fuse, you could cause damage to another location in the electrical system.
- Always keep some spare fuses in the vehicle. These are available from SEAT dealers. ■

Fuses on left side of dash panel

Fuses

Number	Consumer	Amperes
1	Power steering/Engine operation	7,5
2	Instrument panel/Heater/Autoclima/Climatronic/Electro-chrome mirror/Air conditioning pressure switch/ Clima fan, Kisi	10
3	Petrol engine control unit/Flow meter/Diesel engine control unit/Relay coils/Engine operation	5
4	ABS/ESP switch (turning sensor)	10
5	Reverse light heating nozzle	10
6	Diagnosis	10
7	AIRBAG power supply	5
8	Petrol engine operation / Bi-turbo secondary water pump	10
9	Clean pump	10
10	GRA (Speed regulator)/Clutch (Petrol)/Brakes (all)	5
11	Vacant	
12	Automatic gearbox	10
13	Coming Home	5
14	Left-hand AFS headlamps	15
15	Right-hand AFS headlamps	15
16	AFS headlamp control unit	15
17	Registration plate light + Dimmer + Position indicator light	5
18	Headlight control	5
19	Electronic control unit	5
20	Indicators	15

Number	Consumer	Amperes
21	Light control	10
22	Electronic control unit	5
23	Engine injection module	5
24	Glovebox light, boot light, interior light	10
25	Parking aid	20
26	Towing hook	
27	12Volt Input/Cigarette lighter	15
28	Lambda probe	10
29	Engine power supply	20
30	Petrol engine operation	10
31	Petrol engine operation/Glow plugs/Relay coil/Bi-turbo electric fan	10
32	Diesel engine control unit	15
33	Power supply to clutch heater switch	5
34	Fuel control unit / Bi-turbo engine supply	15
35	Engine control unit (petrol)	15
36	Main beam headlight, right	10
37	Main beam headlight, left	10
38	Start power supply disconnection	15
39	Rear windscreen wiper	10
40	Electric exterior mirror	15
41	Electric fan motor (heater/semi-automatic climatiser/climatronic)	25
42	Horn	20
43	Instrument panel/Diagnosis	5
44	Windscreen wipers	20

Number	Consumer	Amperes
45	Rear window heater	20
46	Radio/telephone VDA/Bluetooth/Steering column controls	20
47	Climatronic/autoclimate	5
48	Locking unit	15
49	Front electric window	30
50	Rear electric windows	30
51	Mirror heater	5
52	Alarm/Volume sensor	15
53	Fuel control unit TF3	15
54	Reverse light for automatic gearbox	15
55	Transformer on	15
56	Bi-turbo fuel control unit	15
57	Dipped headlight (right side)	15
58	Dipped headlight (left side)	15

Fuses below steering wheel in relay holder

PTC fuses

Number	Consumer	Amperes
1	Supplementary electrical heating using air	40
2	Supplementary electrical heating using air	40
3	Supplementary electrical heating using air	40

AUX 1 Fuses

Number	Consumer	Amperes
1	Dipped headlight (left side)	15
2	Dipped headlight (right side)	15
3	Automatic gearbox lever	

AUX 2 Fuses

Number	Consumer	Amperes
1	Panoramic roof	20
2	Rain sensor	5
3	Headlight washer pump	20

Fuses in engine compartment above battery

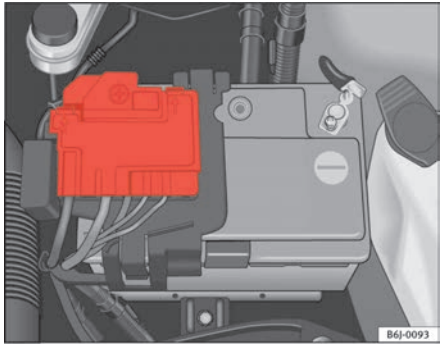

Fig. 141 Battery

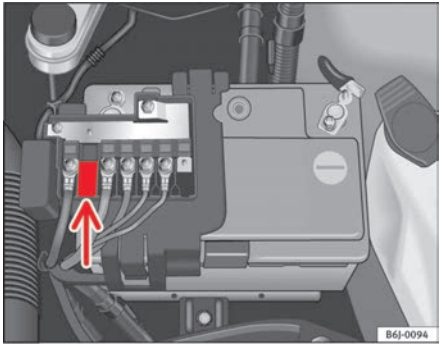

Fig. 142 Additional fuse

Metal fuses[12)]

[12)] These fuses can only be changed at an authorised Service Centre

Number	Consumer	Amperes
1	Alternator	150
2	Compartment interior supply	110
3	Power-steering pump	50
4	ABS unit	40
5	Electro fan heater/Clima heater/ fan	40
6	Glow plugs pre-heating (diesel) / Gearbox control unit	50

Non-metal fuses

Number	Consumer	Amperes
1	ABS unit	25
2	Electroblower clima heater/fan	30
3	Climate fan	5
4	ABS unit	10
5	Electronic control unit	5
6	Injection module	5

Some of the electrical items listed in the table are only fitted on certain models or are optional extras.

If a metal fuse breaks, use the spare space, place an additional fuse in the spare space ⇒ page 216, fig. 142

Please note that the above list contains all data at the time of going to press, so it is subject to modifications. ■

Bulb change

General notes

Before changing any bulb, first turn off the failed component.

Do not touch the bulb glass. Fingerprints vaporise in the heat, causing a reduction in the bulb life and condensation on the mirror surface, thus reducing efficiency.

A bulb should only be replaced by one of the same type. The type is inscribed on the bulb, either on the glass part or on the base.

It is highly recommended to keep a box of spare bulbs in the vehicle. At the very least, the following spare bulbs, which are essential for road safety, should be kept in the vehicle.

Double headlamps

Dipped beam - H7 Long Life
Main beam - H7
Position - 2 x W5W Long Life
Indicator - PY21W

Single headlamp

Dipped/Main H4 Long Life
Position W5W Long Life
Indicator PY 21W

Xenon headlights[13]/ self-adjusting*

Dipped and full beam - D1S[14]
Position W5W Blue Long Life
DRL (day light) P21W Super Long Life
Indicators PY21W

Fog lights

Fog light/cornering - H11

Rear lights

Fog light - P21W
Reverse gear - R10W
Stop/position P21 /5W Long Life
Indicator - PY21W

Side indicator

Side indicator - W5W

Registration plate light

Registration plate light - W5W Long Life

Note

- However, the following is a description of how to change the bulbs except for the fog lights. ■

[13] On this type of headlight, the bulb changes must be made by the SEAT dealer, given that complex elements must be removed from the vehicle and a reset must be made on the automatic control system incorporated.

[14] The Xenon bulbs discharge 2.5 times the light flux and have an average lifespan of 5 times more than that of halogen bulbs, this means that, except due to unusual circumstances, there is no need to change the bulbs for the whole life of the vehicle.

Double headlamps

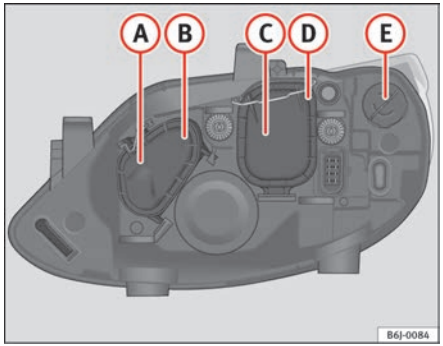

Fig. 143 Double headlamps

(A) Main beam
(B) Side lights
(C) Dipped headlights
(D) Side lights
(E) Indicator light ■

Turn signal lamps

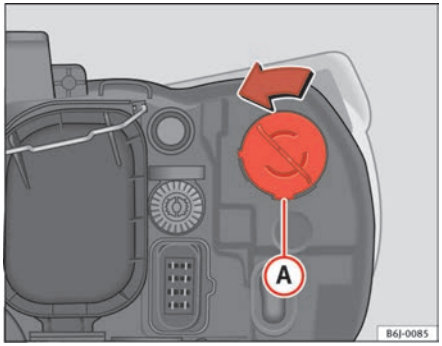

Fig. 144 Indicator light

– Raise the bonnet.

– Rotate the lamp holder ⇒ fig. 144 (A) to the left and pull it.

– Remove the bulb by pressing on the lamp holder and rotating at the same time to the left.

– Installation is done in the reverse order. ■

Dipped and side lights

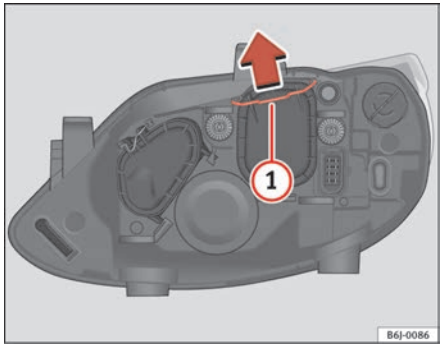

Fig. 145 Dipped headlights

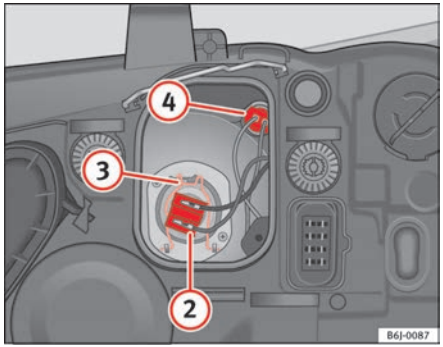

Fig. 146 Side lights

– Raise the bonnet

– Move the loop ⇒ fig. 145 (1) in the direction of the arrow and remove the cover.

– Remove the connector ⇒ fig. 146 (2) from the bulb.

– Disengage the retainer spring ⇒ fig. 146 (3) pressing inwards to the right.

– Extract the bulb and fit the replacement so that the rim of the attachment plate is on the reflector cut-out. ■

Main beam and side lights

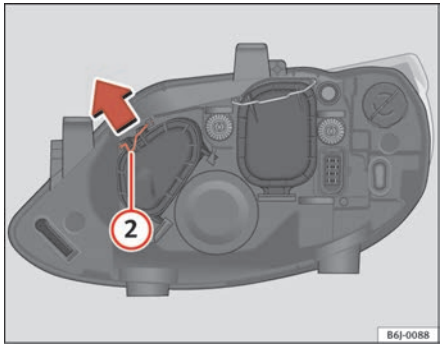

Fig. 147 Main beam headlights

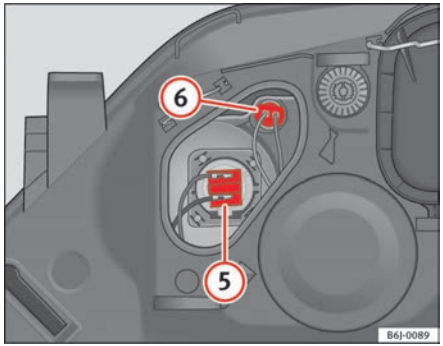

Fig. 148 Side lights

– Raise the bonnet

– Remove the loop (2) in the direction of the arrow and remove the cover ⇒ fig. 147.

– Remove the connector by pulling outward.

– Extract the bulb and fit the replacement so that it sits correctly into the cut-out on the reflector.

– Installation is done in the reverse order. ■

Single headlamps

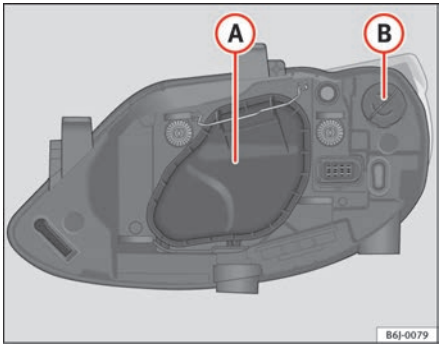

Fig. 149 Single head-lamp

(A) Side lights - Dipped beam/main beam
(B) Indicator ■

Indicator lamps

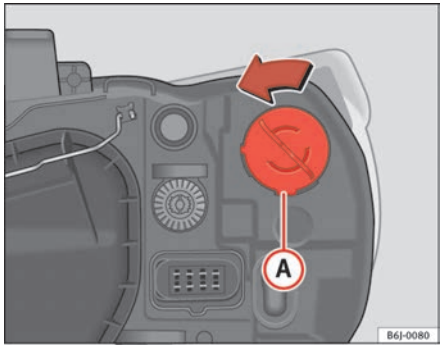

Fig. 150 Single indicator lamp

– Raise the bonnet.

– Rotate the lamp holder ⇒ fig. 150 (A) to the left and pull.

– Remove the bulb by pressing on the lamp holder and rotating at the same time to the left.

– Installation is done in the reverse order. ■

Dipped/main beam

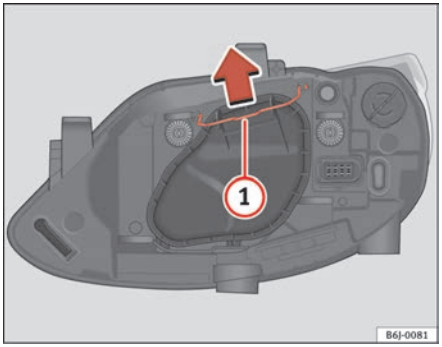

Fig. 151 Dipped beam / main beam, single light

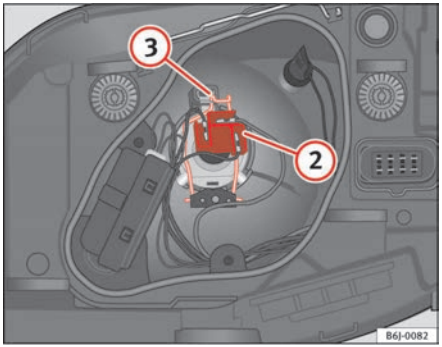

Fig. 152 Dipped beam / main beam, single light

– Raise the bonnet ▶

– Remove the loop ⇒ page 222, fig. 151 (1) in the direction of the arrow and remove the cover.

– Remove the connector ⇒ page 222, fig. 152 (2) from the bulb.

– Disengage the retainer spring ⇒ page 222, fig. 152 (3) by pressing it inwards to the right.

– Extract the bulb and fit the replacement so that the rim of the attachment plate is on the reflector cut-out. ■

Side lights

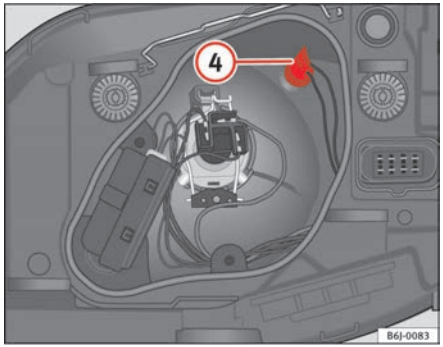

Fig. 153 Side lights

– Raise the bonnet.

– Move the loop ⇒ page 222, fig. 151 (1) in the direction of the arrow and remove the cover.

– Extract the lamp holder (4) ⇒ fig. 153 outwards.

– Replace the bulb by pulling this out and inserting the replacement.

– Installation is done in the reverse order. ■

Rear pilot lights

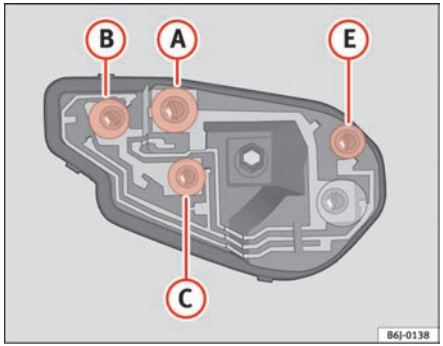

Fig. 154 Left pilot light

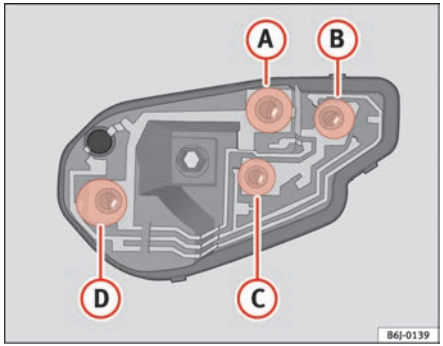

Fig. 155 Right pilot light

(A) Indicators

(B) Side and Brake lights

(C) Side light

(D) Retro-fog light (left pilot light)

(E) Reverse light (right pilot)

Note

In countries driving on the right (left-driving), both D and E headlamps are placed the other way round (Retro-fog light on driver's side and reverse light on passenger side). ■

Access to rear pilot lights

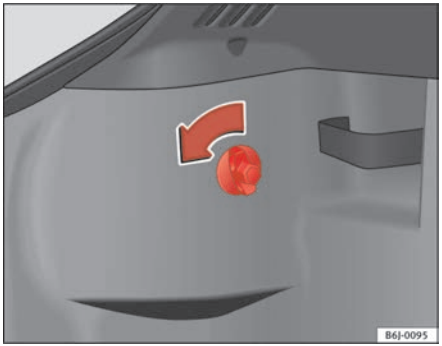

Fig. 156 Access to rear lights

– Open the tailgate

– Turn the bolt in the direction of the arrow, by hand or with the a screwdriver ⇒ fig. 156. ▶

– Remove the pilot light, by pulling it outwards. ■

Changing bulbs on rear lights

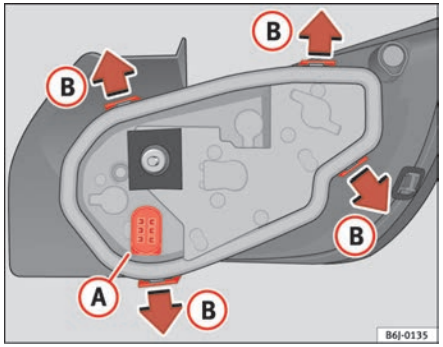

Fig. 157 Changing bulbs on rear lights

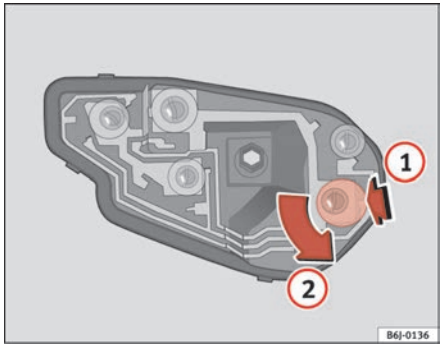

Fig. 158 Changing bulbs on rear lights

– Remove the housing connector (A) ⇒ fig. 157.

– Remove the lamp holder, separating it from the casing. To do this, press tabs (B) in the direction of the arrows ⇒ fig. 157.

– Once the lamp holder has been removed, press downwards in the direction of the arrow (1) and at the same time, turn in the direction of the arrow (2) ⇒ fig. 158. ■

Side indicator lamps

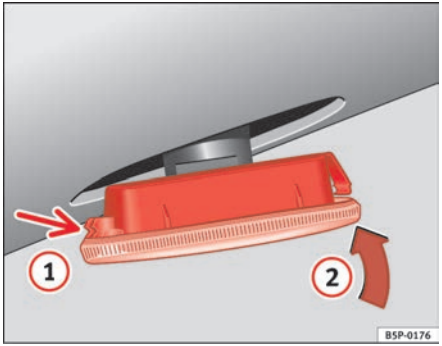

Fig. 159 Side indicators

– Press the indicator to the left or to the right to remove the lamp.

– Remove the lamp holder from the indicator.

– Remove the failed bulb and replace with a new bulb. ▶

– Insert the lamp holder in the indicator guide until it clicks into place.

– First fit the indicator in the opening in the chassis, fastening the tabs (1) ⇒ page 225, fig. 159, and then fit in the lamp as shown by the arrow (2) ⇒ page 225, fig. 159. ■

Number plate light

– Insert the flat part of a screwdriver into the special slot and remove the bulb.

– Remove the lamp holder, by turning it until it is free.

– Change the bulb.

– Replace the lamp holder, by turning it until it fits fully.

– Place the light into the space and press until you hear a “click” ■

Interior light and front reading light

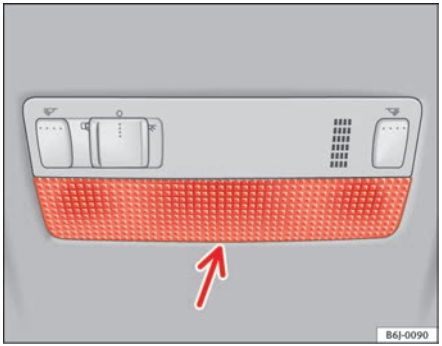

Fig. 160 Front reading light

To remove the glass

– Insert a fine screwdriver between the casing and the glass ⇒ fig. 160.

– Carefully remove the glass, levering it to avoid possible damage.

To replace the lamps

– Pull the lamps outwards.

– To remove the central lamp, hold and press to one side.

Assembly

– Proceed in the reverse order, pressing gently on the outer edge of the side light. ▶

– First fit the glass with the fastening tabs over the frame of the switch. Next press the front part until the two long tabs click on the support. ■

Additional brake lights*

Given the difficulty involved in the replacement of this light it should be done by the Technical Service. ■

Boot light*

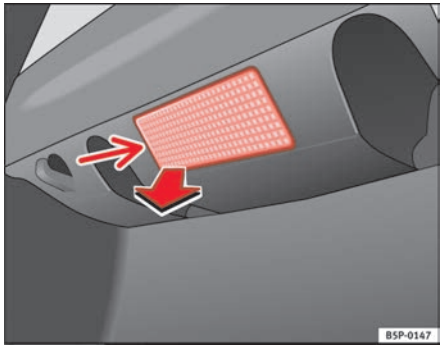

Fig. 161 Luggage compartment light

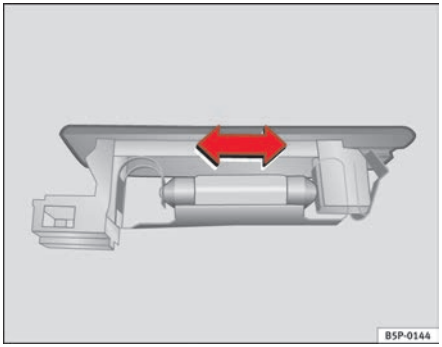

Fig. 162 Luggage compartment light

– Extract the tulip shaped fitting by pressing on the inside edge of this -arrow- using the flat side of a screwdriver ⇒ fig. 161.

– Press the lamp sideways and remove it from its housing ⇒ fig. 162. ■

Jump-starting

Jump leads

The jump lead must have a sufficient wire cross section.

If the engine fails to start because of a discharged battery, the battery can be connected to the battery of another vehicle to start the engine. ▶

Jump leads

Jump leads must comply with the standard **DIN 72553** (see manufacturer's documentation). The wire cross section must be at least 25 mm^2 for petrol engines and at least 35 mm^2 for diesel engines.

Note

- The vehicles must not touch each other, otherwise electricity could flow as soon as the positive terminals are connected.
- The discharged battery must be properly connected to the vehicle electrical system. ■

How to jump start: description

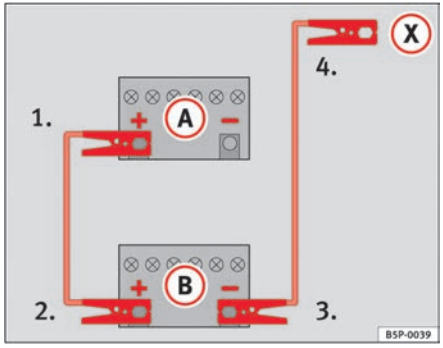

Fig. 163 How to connect the jump leads

In ⇒ fig. 163 (A) the flat battery is represented and in (B) the charged battery is represented.

Jump lead terminal connections

– Switch off the ignition in both vehicles ⇒ ⚠.

1. Connect one end of the red jump lead to the positive ⇒ fig. 163 (+) terminal of the vehicle with the flat battery ⇒ ⚠.
2. Connect the other end of the red jump lead to the positive terminal (+) in the vehicle providing assistance.
3. Connect one end of the black jump lead to the negative terminal (-) on the battery of the vehicle providing assistance.
4. Connect the other end of the black jump lead (X) to a solid metal component which is bolted on to the engine block, or onto the engine block itself of the vehicle with the flat battery. Do not connect it to a point near the battery ⇒ ⚠.
5. Position the leads in such a way that they cannot come into contact with any moving parts in the engine compartment.

Starting

6. Start the engine of the vehicle with the boosting battery and let it run at idling speed.
7. Start the engine of the car with the flat battery and wait one or two minutes until the engine is “running”.

Removing the jump leads

8. Before you remove the jump leads, switch off the headlights (if they are switched on).
9. Turn on the heater blower and rear window heater in the vehicle with the flat battery. This helps minimise voltage peaks which are generated when the leads are disconnected. ▶

10. When the engine is running, disconnect the leads in reverse order to the details given above.

Connect the battery clamps so they have good metal-to-metal contact with the battery terminals.

If the engine fails to start, switch off the starter after about 10 seconds and try again after about half a minute.

WARNING

- **Please note the safety warnings referring to working in the engine compartment ⇒ page 181, “Working in the engine compartment”.**
- **The battery providing assistance must have the same voltage as the flat battery (12V) and approximately the same capacity (see imprint on battery). Failure to comply could result in an explosion.**
- **Never use jump leads when one of the batteries is frozen. Danger of explosion! Even after the battery has thawed, battery acid could leak and cause chemical burns. If a battery freezes, it should be replaced.**
- **Keep sparks, flames and lighted cigarettes away from batteries, danger of explosion. Failure to comply could result in an explosion.**
- **Observe the instructions provided by the manufacturer of the jump leads.**
- **Do not connect the negative cable from the other vehicle directly to the negative terminal of the flat battery. The gas emitted from the battery could be ignited by sparks. Danger of explosion.**
- **Do not attach the negative cable from the other vehicle to parts of the fuel system or to the brake line.**
- **The non-insulated parts of the battery clamps must not be allowed to touch. The jump lead attached to the positive battery terminal must not touch metal parts of the vehicle, this can cause a short circuit.**
- **Position the leads in such a way that they cannot come into contact with any moving parts in the engine compartment.**

WARNING (continued)

- **Do not bend over the batteries. This could result in chemical burns.**

Note

The vehicles must not touch each other, otherwise electricity could flow as soon as the positive terminals are connected. ■

Towing and tow-starting

Tow-starting*

The use of jump leads is preferable to tow-starting.

We recommend that you do **not** tow-start your vehicle. Jump-starting is preferable ⇒ page 227.

However, if your vehicle has to be tow-started:

– Engage the 2nd or the 3rd gear.

– Keep the clutch pressed down.

– Switch the ignition on.

– Once both vehicles are moving, release the clutch.

– As soon as the engine starts, press the clutch and move the gear lever into neutral. This helps to prevent driving into the towing vehicle.

WARNING

The risk of accidents is high when tow-starting. The vehicle being towed can easily collide with the towing vehicle.

Caution

When tow-starting, fuel could enter the catalytic converter and damage it. ■

Comments

Please observe the following points if you use a tow-rope:

Notes for the driver of the towing vehicle

– Drive slowly at first until the tow-rope is taut. Then accelerate gradually.

– Begin and change gears cautiously. If you are driving an automatic vehicle, accelerate gently.

– Remember that the brake servo and power steering are not working in the vehicle you are towing. Brake earlier than you would normally, but with a more gentle pressure on the brake.

Notes for the driver of the towed vehicle

– Ensure that the tow-rope remains taut at all times when towing.

Tow-rope or tow-bar

It is easier and safer to tow a vehicle with a tow-bar. You should only use a tow-rope if you do not have a tow-bar.

A tow-rope should be slightly elastic to reduce the loading on both vehicles. It is advisable to use a tow-rope made of synthetic fibre or similarly elastic material.

Attach the tow-rope or the tow-bar only to the towing eyes provided or a towing bracket.

Driving style

Towing requires some experience, especially when using a tow-rope. Both drivers should be familiar with the technique required for towing. Inexperienced drivers should not attempt to tow-start or tow away another vehicle. ▶

Do not pull too hard with the towing vehicle and take care to avoid jerking the tow-rope. When towing on an unpaved road, there is always a risk of overloading and damaging the anchorage points.

The ignition of the vehicle being towed must be switched on to prevent the steering wheel from locking and also to allow the use of the turn signals, horn, windscreen wipers and washers.

As the brake servo does not work if the engine is not running, you must apply considerably more pressure to the brake pedal than you normally would.

As the power assisted steering does not work if the engine is not running, you will need more strength to steer than you normally would.

Towing vehicles with an automatic gearbox

- Put the selector lever into position “N”.
- Do not drive faster than 50 km/h when towing a vehicle.
- Do not tow further than 50 km.
- If a breakdown vehicle is used, the vehicle must be towed with the front wheels raised.

Note

- Observe legal requirements when towing or tow-starting.
- Switch on the hazard warning lights of both vehicles. However, observe any regulations to the contrary.
- For technical reasons, vehicles with an automatic gearbox must not be tow-started.
- If damage to your vehicle means that there is no lubricant in the gearbox, you must raise the drive wheels while the vehicle is being towed.
- If the vehicle has to be towed more than 50 km, the front wheels must be raised during towing, and towing should be carried out by a qualified person.
- The steering wheel is locked when the vehicle has no electrical power. The vehicle must then be towed with the front wheels raised. Towing should be carried out by a qualified person.
- The towing eye should always be kept in the vehicle. Please consider the notes on. ■

Trailer eyes

Fig. 164 Fitting the towing eye to the rear of the vehicle

Fitting the towing eye

– Take the towing ring from the onboard tools.

– Pull the lower front cover down and leave the cover hanging on the vehicle.

– Remove the cover of the screw hole, insert a screwdriver into the lower slot and lever gently.

– Screw the eye to its limit to the *left*, in the direction of the arrow ⇒ fig. 164. ■

Rear towline anchorage

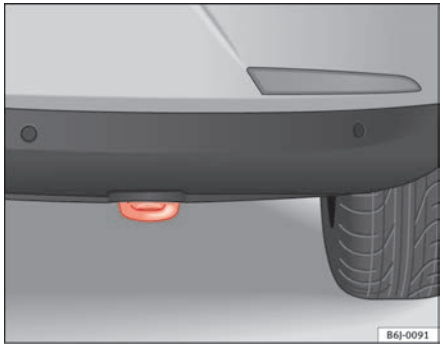

Fig. 165 Rear towing ring

At the rear, on the right below the rear bumper is a towline point. ■

Technical Data

General notes on the technical data

Outstanding information

Important considerations

All data in the official vehicle documents take precedence over this data.

All data provided in this manual are valid for the standard model in Spain. The vehicle data card included in the Maintenance Programme or the vehicle registration documents shows which engine is installed in your vehicle.

The figures may be different depending on if additional equipment is fitted, for different models, for special vehicles and for other countries.

Abbreviations used in this paragraph of the Technical Data

Abbreviation	Meaning
kW	Kilowatt, engine power measurement.
bhp	Brake horse power, formerly used to denote engine power
at rpm	Revolutions per minute - engine speed.
Nm	Newton metres, unit of engine torque.
l/100 km	Fuel consumption in litres per 100 km.
g/km	Carbon dioxide emissions in grams per km travelled.
CO_2	Carbon dioxide
CN	Cetane number, indication of the diesel combustion power.
RON	Research octane number, indication of the knock resistance of petrol.

Vehicle identification data

The most important data are given on the type plate and the vehicle data sticker.

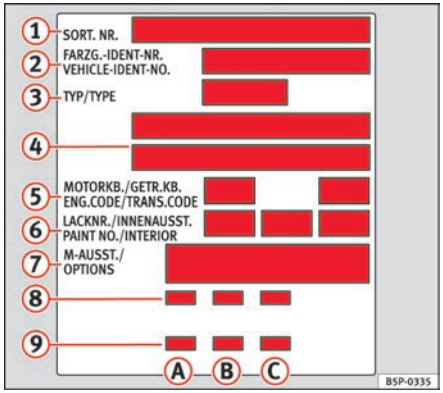

Fig. 166 Vehicle data sticker – boot

Vehicles for certain export countries do not have a type plate.

Type plate

The type plate is located on the left rib inside the engine compartment.

Vehicle identification number

The vehicle identification number (chassis number) can be read from outside the vehicle through a viewer in the windscreen. This is located on the left-hand side of the vehicle in the lower area of the windscreen. It is also located on the right hand side of the engine compartment.

Vehicle data

The data sticker is placed on the inside of the spare wheel recess in the luggage compartment.

The following information is provided on the vehicle data sticker: ⇒ fig. 166

These data are also provided in the Maintenance Program.

1. Production control number
2. Vehicle identification number (chassis number)
3. Model code number
4. Model designation / engine power output
5. Engine and gearbox code letters
6. Paintwork number / interior trim code
7. Optional equipment codes
8. Consumption values
9. CO_2 emissions values.

Data from 2 to 9 are also provided in the Maintenance Program.

Consumption figures and CO_2

- A Consumption (litres/100 km) / CO_2 emissions (g/km) urban
- B Consumption (litres/100 km) / CO_2 emissions (g/km) motorway
- C Consumption (l/100 km) / CO_2 Emissions (g/km) mixed

Data on fuel consumption

Fuel consumption

The consumption and emission details shown on the vehicle data sticker differ from one vehicle to another.

The fuel consumption and CO_2 emissions of the vehicle can be found on the vehicle data sticker.

The fuel consumption and emissions figures given are based on the vehicle weight category, which is determined according to the engine/gearbox combination and the equipment fitted.

The consumption and emission figures are calculated in accordance with the EC test requirements 1999/100/EC. These test requirements specify a realistic test method based on normal everyday driving.

The following test conditions are applied:

Urban cycle	The urban cycle starts with an engine cold start. City driving is then simulated.
Extra urban cycle	In the extra urban cycle simulation the vehicle frequently accelerates and brakes in all gears, as in normal everyday driving. The road speed ranges from 0 to 120 km/h.
Total consumption	The average total consumption is calculated with a weighting of around 37% for the urban cycle and 63% for the extra urban cycle.
CO_2 emissions	The exhaust gases are collected during both driving cycles to calculate carbon dioxide emissions. The gas composition is then analysed to evaluate the CO_2 content and other emissions.

Note

- Actual consumption may vary from quoted test values, depending on personal driving style, road and traffic conditions, the weather and the vehicle condition. ■

Weights

Kerb weight refers to the basic model with a fuel tank filled to 90% capacity and without optional extras. The figure quoted includes 75 kg to allow for the weight of the driver.

For special versions and optional equipment fittings or for the addition of accessories, the kerb weight of the vehicle may increase ⇒ ⚠.

WARNING

- **Please note that the centre of gravity may shift when transporting heavy objects; this may affect the vehicle's handling and lead to an accident. Always adjust your speed and driving style to suit road conditions and requirements.**
- **Never exceed the gross axle weight rating or the gross vehicle weight rating. If the allowed axle load or the allowed total weight is exceeded, the driving characteristics of the vehicle may change, leading to accidents, injuries and damage to the vehicle.** ■

Towing a trailer

Trailer weights

Trailer weights

The trailer weights and drawbar loads approved are selected in intensive trials according to precisely defined criteria. The approved trailer weights are valid for vehicles in the *EU* for maximum speeds of 80 km/h (in certain circumstances up to 100 km/h). The figures may be different in other countries. All data in the official vehicle documents take precedence over these data ⇒ ⚠.

Drawbar load

The *maximum* permitted weight exerted by the trailer drawbar on the ball joint of the towing bracket must not exceed **75 kg**.

In the interest of road safety, we recommend that you always tow approaching the maximum drawbar load. The response of the trailer on the road will be poor if the drawbar load is too small.

If the maximum permissible drawbar load cannot be met (e.g. with small, empty and light-weight single axle trailers or tandem axle trailers with an axle base of less than 1 metre), at least 4% of the actual trailer weight is a legal stipulation for a drawbar load.

WARNING

- **For safety reasons, you should not drive at speeds above 80 km/h when towing a trailer. This also applies to countries where higher speeds are permitted.**
- **Never exceed the maximum trailer weights or the draw bar loading. If the permissible axle load or the permissible total weight is exceeded, the driving characteristics of the vehicle may change, leading to accidents, injuries and damage to the vehicle.** ■

Wheels

Tyre pressure, snow chains, wheel bolts

Tyre pressures

The sticker with the tyre pressure values can be found on the inside of the tank flap. The tyre pressure values given there are for *cold* tyres. The slightly raised pressures of warm tyres must not be reduced. ⇒ ⚠ ▶

Snow chains

Snow chains may be fitted only to the front wheels, and only to the following tyres:

175/70R14 185/60R15	Chains with links not exceeding 15 mm (including the chain closure)
215/45R16	Chains with links not exceeding 9 mm (including the chain closure)
215/40R17	Chains with links not exceeding 7mm (including the chain closure)

Wheel bolts

After the wheels have been changed, the **tightening torque** of the wheel bolts should be checked as soon as possible with a torque wrench ⇒ ⚠. The tightening torque for steel and alloy wheels is **120** Nm.

WARNING

- **Check the tyre pressure at least once per month. Checking tyre pressure value is very important. If the tyre pressure is too high or too low, there is an increased danger of accidents, particularly at high speeds.**
- **If the torque of the wheel bolts is too low, they could loosen while the vehicle is in motion. Risk of accident! If the tightening torque is too high, the wheel bolts and threads can be damaged.**

Note

We recommend that you ask your Authorised Service Centre for information about appropriate wheel, tyre and snow chain size. ■

Technical Data

Checking fluid levels

From time to time, the levels of the different fluids in the vehicle must be checked. Never fill with incorrect fluids, otherwise serious damage to the engine may be caused.

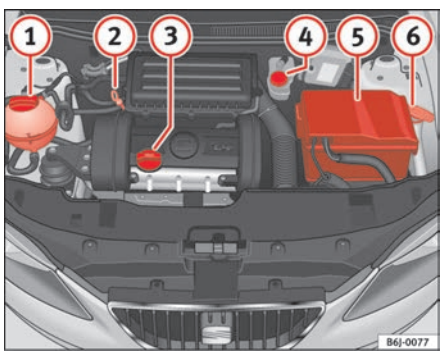

Fig. 167 Diagram for the location of the various elements

1. Coolant expansion tank
2. Engine oil dipstick.
3. Engine oil filler cap
4. Brake fluid reservoir
5. Battery
6. Windscreen washer fluid container

The checking and refilling of service fluids are carried out on the components mentioned above. These operations are described in the ⇒ page 181.

Overview

Further explanations, instructions and restrictions on the technical data are contained as of ⇒ page 233.

Note

The layout of parts may vary depending on the engine. ■

Petrol engine 1.2 51kW (70 CV)

General engine data

Power output in kW (bhp)	rpm	51 (70)/ 5400
Maximum torque	in Nm at rpm	112/ 3000
No. of cylinders, capacity	in cm ^{3}	3/ 1198
Compression		10,5 +/- 0,3
Fuel		Super 95 RON[a)]/Normal 91 RON[b)]

a) **R**esearch-**O**ctane-**N**umber = Measure of the antidetonator petrol power.
b) Slight power loss

Performance figures

Maximum speed	in km/h	165
Acceleration from 0-80 km/h	in sec.	9,5
Acceleration from 0-100 km/h	in sec.	14,4

Weights

Gross vehicle weight	in kg	1475
Weight in working order (with driver)	in kg	1049
Front gross axle weight	in kg	805
Rear gross axle weight	in kg	760
Permitted roof load	in kg	75

Trailer weights

Trailer without brakes	520
With brakes, gradients up to 8%	1000
With brakes, gradients up to 12%	800

Engine oil capacity

Approximate engine oil capacity with oil filter change	2.75 litres

Petrol engine 1.4 63 kW (85 bhp)

General engine data

Power output in kW (bhp)	rpm	63 (85)/ 5000
Maximum torque	in Nm at rpm	132/ 3800
No. of cylinders, capacity	in cm^3	4/ 1390
Compression		10,5 +/- 0,3
Fuel		Super 95 RON[a)]/Normal 91 RON[b)]

a) **R**esearch-**O**ctane-**N**umber = Measure of the antidetonator petrol power.
b) Slight power loss

Performance figures

Maximum speed	in km/h	177
Acceleration from 0-80 km/h	in sec.	7,6
Acceleration from 0-100 km/h	in sec.	11,8

Weights

Gross vehicle weight	in kg	1501
Weight in working order (with driver)	in kg	1075
Front gross axle weight	in kg	855
Rear gross axle weight	in kg	760
Permitted roof load	in kg	75

Trailer weights

Trailer without brakes	530
With brakes, gradients up to 8%	1200
With brakes, gradients up to 12%	1000

Engine oil capacity

Approximate engine oil capacity with oil filter change	2.8 litres

Petrol engine 1.6 77 kW (105 bhp)

General engine data

Power output in kW (bhp)	rpm	77 (105)/5600
Maximum torque	in Nm at rpm	153/ 3800
No. of cylinders, capacity	in cm^3	4/ 1598
Compression		10,5+/- 0,2
Fuel		95 super RON[a)]

a) **R**esearch-**O**ctane-**N**umber = Measure of the antidetonator petrol power.

Performance figures

Maximum speed	in km/h	189
Acceleration from 0-80 km/h	in sec.	6,8
Acceleration from 0-100 km/h	in sec.	10,4

Weights

Maximum authorised weight	in kg	1516
Weight in working order (with driver)	in kg	1090
Front gross axle weight	in kg	855
Rear gross axle weight	in kg	760
Permitted roof load	in kg	75

Trailer weights

Trailer without brakes:	540
With brakes, gradients up to 8%	1200
With brakes, gradients up to 12%	1000

Engine oil capacity

Approximate engine oil capacity with oil filter change	3.3 litres

Diesel engine 1.9l TDI 77 kW (105 bhp)

General engine data

Power output in kW (bhp)	rpm	77 (105)/ 4000
Maximum torque	in Nm at rpm	240/ 1900
No. of cylinders, capacity	in cm ^{3}	4/ 1896
Compression		18,5
Fuel		Min. 51 CZ[a)]

a) **C**etane-**N**umber (cetane index) = Measure of the diesel combustion power.

Performance figures

Maximum speed	in km/h	187
Acceleration from 0-80 km/h	in sec.	7,1
Acceleration from 0-100 km/h	in sec.	10,4

Weights

Gross vehicle weight	in kg	1601
Weight in working order (with driver)	in kg	1175
Front gross axle weight	in kg	935
Rear gross axle weight	in kg	760
Permitted roof load	in kg	75

Trailer weights

Trailer without brakes	580
With brakes, gradients up to 8%	1200
With brakes, gradients up to 12%	1200

Engine oil capacity

Approximate engine oil capacity with oil filter change	5 litres

Dimensions and capacities

Dimensions		
Length, width	4,034 mm/ 1,693 mm	
Height at kerb weight	1,428 mm	
Front and rear projection	848 mm/ 717 mm	
Wheelbase	2,469 mm	
Turning circle	10.7 m	
Track width[a)]	**Front**	**Rear**
	1,463 mm	1,457 mm
Capacities		
Fuel tank	45 l. Reserve 7 l.	
Windscreen washer fluid container with headlight washer	2 l/ 4.5 l	
Tyre pressure		
Summer-grade tyres: The correct tyre pressure can be seen on the sticker on the inside of the tank flap. **Winter tyres:** The pressure of these tyres is the same as the summer tyre pressure plus 0.2 bar.		

a) This data will change depending on the type of wheel rim.

Index

A

ABS 150
Warning lamp 61
Accessories 173
Acoustic signal 17
Acoustic warning 130
Adjustable service interval display 56
Air conditioning system
Climatronic 123
General notes 126
Air conditioning* 120
Air outlets 119
Air recirculation
Semi-automatic air conditioning 122
Air recirculation mode
Climatronic 125
Airbag system 26
Curtain airbags 35
Front airbags 29
Side airbags 31
Warning lamp 27
Alarm system
Switching off 79
Alternator
Warning lamp 66
Ambient temperature display 53, 55
Anti-freeze 188
Anti-lock brake system 150
Warning lamp 61
Anti-theft alarm system 78
Switching off 79
Anti-theft wheel bolts 206
Aquaplaning 199
Automatic anti-dazzle interior mirror*
Activating the anti-dazzle function 99
Deactivating anti-dazzle function 99
Automatic car washing tunnel 165
Automatic gearbox 134
Kick-down feature 140
Selector lever positions 138
Automatic wiper/wash function for the rear window 98
AUX input connection/USB* 113
Auxiliary audio input connection: AUX 113

B

Ball coupling 161
BAS 149
Battery
Changing 196
Charging 196
Winter conditions 195
Belt tension device
Disposal 25
Warning lamp 27
Belt tension devices 25
Biodiesel 180
Biodiesel fuel 180
Bonnet 183
Boot 114
Boot* 95, 227
Brake Assist System
Warning lights automatic lighting 149
Brake fluid 193
Changing 194
Brake pads 153
Brake servo 149, 153
Brake system 193
Warning lamp 63
Brakes 153
Braking distance 153
Bulb changes
general notes 218
Bulb defect
Indicator 61
Buzzer 93, 130

C

Car phone 174
Catalytic converter 154

Central locking 72
Automatic speed dependent locking and unlocking system* 74
Locking system for involuntary unlocking . . 74
Selective unlocking system* 73
Unlocking system* 74
Central locking button
Central locking 75
unlocking 75
Cetane number 180
Changing bulbs on rear lights 224, 225
Changing double headlight lamps
dipped headlights and side lights 220
main headlights and side lights 221
Changing gear
See Manual gearbox 133
Changing gear with Tiptronic 138
Changing lamps
interior light and reading light 226
Changing the lamps
Main headlight lamps 219, 221
number plate light 226
Side indicator lights 225
Changing the main headlight lamps
turn signal lamps 219
Changing the single headlight lamps
dipped/main beam 222
indicator lamps 222
Side lights 223
Changing windscreen wiper blades 191
Chassis number 234
Checking 196
Checking battery electrolyte level 196
Checking engine oil level 186
Child safety 40
Child seat 42
Categorisation in groups 42
Group 1 43
Group 2 43
Group 3 43
Groups 0 and 0+ 42
ISOFIX system 46
Safety notes 41
Securing 45
Child seats
on the front passenger seat 27
Cigarette lighter 112
Cleaning alloy wheel rims 169
Cleaning chrome 168
Cleaning engine compartment 170
Cleaning steel wheel rims 169
Cleaning windows 167
Climatronic
automatic mode 124
controls 123
General notes 126
manual mode 125
Clock 52
Cloth seat covers cleaning 171
Cockpit 49
Coming home function 90
Control
wing mirrors 100
Control lamps 57
Control lighting 49
Controls
Electric windows 83
Light switches 88
Convenience closing
Sliding/tilting roof 86
Windows 85
Convenience opening
Windows 85
Coolant 188, 189
Coolant Level 189
Coolant level
warning light 65
Coolant Loss 189
Coolant temperature
Safety instructions 66
Correct adjustment of front head restraints . . . 12
Covering single headlights
driving on the left 156
driving on the right 156
Cruise control system 144
Warning lamp 63
Curtain airbags 35
Description 35
Function 36
Safety notes 36

D

Danger of fitting a child seat on the front passenger seat 27
Dash panel cleaning 171
Diesel 180
Diesel engine
Winter driving 180
Diesel engine particulate filter 155
Differential lock 152
Differential lock fault (EDL)
warning lamp 62
Digital clock 52
Dipped headlights 88
Disabling front passenger airbag
Safety notes 39
Disabling the airbag
Disabling front passenger airbag 38
Displays in the Multi-function display
Memory displays 54
Disposal
Airbags 28
Door lock cylinders 168
Door release lever 49
Doors
warning lamp 64
Drive wheels traction control system 150
Driving
Driving abroad 155
With a trailer 161
with a trailer 160
Driving abroad 155
Headlights 155
Driving safety 8
Duplicate keys 76
Dust filter 126
Dynamic headlight range control 89

E

Ecological driving 162
Economical driving 162
EDL 152
EDS
Warning lamp 61
Electrical power points 112
Electrohydraulic steering
warning lamp 65
Electronic differential lock 152
Warning lamp 61
Electronic immobiliser 130
Electronic stabilisation program 151
Electronic stabilisation programme 62
Description 129
Warning lamp 129
Electronic stabilisation programme (ESP)
warning lamp 62
Emission control system
warning lamp 65
Engine
Running in 153
Engine compartment
Working in the engine compartment 181
Engine coolant 188
Engine fault
warning lamp 60
Engine management
Warning lamp 60
Engine oil 184
Changing 187
Checking level 186
Oil properties 185
Specifications 184
Topping up 187
Engine oil dipstick 186
Engine oil pressure
Warning lamp 61
Environmental tip
Avoiding pollution 179
ESP 62, 151
Exhaust gasses purification system 154
Exterior mirrors 167
External aerial 174

F

Fabric trim cleaning 171
Floor mats 14
Fog lights 88
Front airbags 29
Description 29
Front ashtray 111

Front cup holder* 110
Front interior light 94
Front passenger airbag deactivation 38
Front reading light 95
Front seat adjustment
Lumbar support 105
Frontal airbags
Operation 30
safety notes 31
Fuel
Diesel 180
Petrol 179
Fuel level
Indicator 52
Fuel reserve 64
Fuel Tank
Opening the fuel tank flap 178
Fuel tank
See Fuel reserve 64
Fuses 211

G

G 12 188
Gear shift pattern 133
General overview of the engine compartment 238
Glove compartment 108
Glow plug system 132
warning lamp 60

H

Handbrake 141
Warning lamp 63, 141
Hazard warning lights 92
head restraints
Adjusting 103, 104
adjustment of the head restraint angle . . . 104
Removing 104
Headlight flashers 93
Headlight range control 89
Headlights
Driving abroad 155
Fog lights 88
Washer system 99
Heated exterior mirrors* 100
Heated front seats 106
Heating 117
Heating system 118
High pressure cleaners 166
Horn 49
How to jump start description 228

I

Identification number 234
Ignition key 130
Ignition lock 130
Indicators
indication lamp 66
Instrument and switch lighting 89
Instrument lighting 49
Instrument panel 49
Instruments 51
Interior monitor and anti-towing alarm*
Activation 79
Intermittent wipe, windscreen 96
ISOFIX system 46

J

Jump leads 227
Jump-starting 227

K

Key tab 76
Keys 76

L

Leather cleaning 171
Lights 88
Load compartment in the boot
See Luggage compartment 15
Locks 168
Luggage compartment 15
See also Luggage compartment 15

M

Main beam 88, 93

Main beam headlights
Indicator lamp 65
Main headlight lamps 219, 221
Maintenance
airbags 28
Maintenance and cleaning 164
Manual gearbox 133
Manual heating 118
controls 117
Manual heating system
Defrosting the windscreen 118
Demisting the windscreen and side windows . . 118
MFD 53
Mileage display 56
Mirrors
Interior mirror 99
vanity mirror 95
Wing mirrors 100
Mobile phone 174
Multi-function display 53

N

Number of seats 16

O

Object compartment
right-hand front seat 109
Observations 155
Octane number 179
Oil 184
Oil change 187
Oil properties 185
One-touch opening and closing
Electric windows 84
Open stowage compartment 115
Opening and locking 81
Operation when a fault occurs
Panoramic/ tilting roof 87
Overview
Control lamps 57
Instrument panel 49
Instruments 51
Warning lamps 57

P

Paintwork
Polishing 167
Panoramic roof 85
Parking 141
Parking lights 93
Pedals 14
Petrol 179
Driving abroad 155
Petrol additives 179
Petrol engines, starting 131
Physical principles of a frontal collision 18
Plastic key tab 76
Plastic parts 167
Plastic parts cleaning 171
Pollen filter 126
Products for vehicle maintenance 164

R

Radio frequency remote control
Changing the battery 78
Radio wave remote control 77
Rain sensor* 97
Rear cupholder* 111
Rear fog light
Warning lamp 61
warning lamp 88
Rear head restraints 13
Rear pilot lights 224
Rear seat
folding down 107
Rear seat bench 107
Rear window heating
Heating element wires 168
Rear window wiper 98
Rear-view mirror 99
Rearview mirrors 99
Refuelling 178
Remote control key
Buttons 77
Removing and fitting the wheel 208

Repairs
airbags 28
Replacement keys 76
Replacement of parts 173
Rev counter 52
Reverse gear
Manual gearbox 133
Roll-back function
Panoramic/ tilting roof 87
Windows 84
Roof aerial* 174
Roof carrier* 115
Rubber seals 168
Running in
Brake pads 153
Engine 153
Tyres 153
Running in tyres 153

S

Safe driving 7
Safety 8
Safety equipment 7
Safety instructions
Coolant temperature 66
Safety notes
Airbags 28
Belt tension devices 25
Curtain airbags 36
Disabling front passenger airbag 39
frontal airbags 31
side airbags 34
Using child seats 41
Using seat belts 20
Safety system- safe 72
Seals 168
Seat adjustment 102, 105
Seat belt position
Pregnant women 23
Seat belts 22
Seat belt release 24
Seat belt warning lamp 16
Seat belts 16
adjustment 21
Incorrectly fastened 24
Not worn 19
Safety notes 20
Warning lamp 16
Seat belts cleaning 172
Seat belts protection 20
Seat heating 106
Seats 16
Selective opening* 73
Self directional headlights 90
Semiautomatic air conditioning
controls 120
Shoes 14
Side airbags 31
Description 31
Function 32
Safety notes 34
Side lights 88
Sitting position
Driver 9
Front passenger 10
Incorrect sitting position 13
Passengers 11
Sitting position, occupants 9
Snow chains 202, 237
Soot accumulation in the diesel engine particulate filter *
Indicator 60
Spare parts 173
Spare wheel 203
Speed indicator in mph (miles per hour) 53
Speed selector lever lock
warning lamp 64
Speedometer 52
Starting on an uphill 142
Starting Petrol engines 132
Starting the engine 131, 132
After the fuel tank has been run dry 132
Steam jets 166
Steering 128
Steering lock 130
Steering column controls
Audio Control 68
Steering wheel height adjustment 128
Stowage compartment
Front passenger side 108
Sun visors 95

Sunroof blind
Sliding/tilting roof 86
Switch
Hazard warning lights 92
Rear window heating 91
Switches
Electric windows 83
Sliding/tilting roof 85
Switching off the engine 132

T

Tailgate 81
Emergency opening 82
warning lamp 65
Tank
fuel level 52
reserve indicator 52
tank capacity 52
TCS 150
TCS (Traction control system)
Warning lamp 62
Technical modifications 173
The danger of not using the seat belt 19
Tightening torque of wheel bolts 237
Tilting roof 85
Tools 203
Tow starting
Comments 230
Towing 230
Towing a trailer 160, 236
Towing bracket 161
Towing bracket, fitting 176
Towing eye 230
Tow-starting 230
Traction control system
warning lamp 62
Trailer eyes 231
Trailer turn signals
Warning lamp 93
Trailer weights 236
Trips, checklist 8
Turn signals 93
Warning lamp 66, 93
Two-way radio 174
Type plate 234
Tyre Mobility-System (Tyre repair kit) 204
Tyre monitor indicator 63
Tyre pressure 197
Tyre pressures 236
Tyre repair kit 204, 209
Tyre-Mobility-System (Tyre repair kit) 209
Tyres and wheels
Dimensions 199
Tyres service life 198
Tyres tread depth 199
Tyres with directional tread pattern 197

U

Underbody maintenance 170

V

Vehicle battery 195
Vehicle data 234
Vehicle identification data 234
Vehicle identification number 234
Vehicle interior heating or cooling system . . . 121
Vehicle Maintenance
Exterior 165
Vehicle modifications 173
Vehicle paintwork
Products for vehicle maintenance 164
Waxing 167
Vehicle tools
Storage 203
Vehicle wallet storage 108
Vehicle washing 165
Ventilation 118
Ventilation slits 15

W

Warning lamp 27
Warning lamps 57
Warning triangle 113
Washer fluid 190
Washing by hand 165
Washing tunnel 165
Washing with high pressure cleaners 166
Water in the windscreen washer tank 190

Wear indicators 199
Wheel bolts 206, 237
Torque 200
Wheel change 204
Wheels 197, 236
Why assume the correct sitting position? 26
Why should head restraints be correctly adjusted? 12
Why to wear seat belts? 16
Why wear seat belts? 18, 26
Windows 83
Windscreen defrosting 118
Windscreen wiper blades
Cleaning 168
Windscreen wipers 96
Changing blades 191
Changing the rear blade 192
Winter driving
Diesel engine 180
Winter tyres 201
Wiper/wash automatic function 96
Wooden trim cleaning 171
Working in the engine compartment 181

SEAT S.A. is permanently concerned about continuous development of its types and models. For this reason we ask you to understand, that at any given time, changes regarding shape, equipment and technique may take place on the car delivered. For this reason no right at all may derive based on the data, drawings and descriptions in this current handbook.

All texts, illustrations and standards in this handbook are based on the status of information at the time of printing. Except for error or omission, the information included in the current handbook is valid as of the date of closing print.

Re-printing, copying or translating, whether total or partial is not allowed unless SEAT allows it in written form.

SEAT reserves all rights in accordance with the "Copyright" Act.

All rights on changes are reserved.

This paper has been manufactured using bleached non-chlorine cellulose.

© SEAT S.A. - Reprint: 15.06.08

Inglés 6J3012003B (06.08) (GT9)

6J3012003B

SEAT