SEAT

autoenmoda

SEAT EXEO ST OWNER'S MANUAL

2303 MAT

Foreword

This Instruction manual and its corresponding supplements should be read carefully to familiarise yourself with your vehicle.

Besides the regular care and maintenance of the vehicle, its correct handling will contribute to preserve its value.

For safety reasons, note the information concerning accessories, modifications and parts change.

If selling the vehicle, give all of the onboard documentation to the new owner as this should be kept with the vehicle.

Contents

Manual structure 5

Content 6

Safety First 7

Safe driving 7
- Brief introduction 7
- Proper sitting position for occupants 10
- Pedal area 15
- Stowing luggage 16

Seat belts 18
- Brief introduction 18
- Why wear seat belts? 19
- Seat belts 22
- Belt tension devices 26

Airbag system 28
- Brief introduction 28
- Front airbags 31
- Knee airbag* 34
- Side airbags* 37
- Curtain airbags 41
- Deactivating airbags* 44

Child safety 46
- Brief introduction 46
- Child seats 48
- Securing child seats 51

Operating instructions 57

Cockpit 57
- Overview 57
- Instruments 59
- Warning and indicator lamps 65
- Driver information system 71
- Auto-check system 75
- Speed warning 82
- On-board computer 85
- Menu display 87
- Tyre pressure monitoring 89

Steering wheel controls 91
- The multi-function steering wheel 91

Unlocking and locking 96
- Remote control keys 96
- Central locking 99
- Tailgate 103
- Childproof locks 105
- Remote control key 106
- Anti-theft alarm system* 108
- Electric windows 110
- Sun roof / deflector* 112

Lights and visibility 116
- Lights 116
- Interior lights 124
- Visibility 127
- Windscreen wipers 128
- Rear-view mirrors 131

Seats and stowage 134
- Manual adjustment of the front seats 134
- Electric adjustment of front seats* 136
- Lumbar support* 137
- Memory for driver's seat* 138
- Head restraints 140
- Armrests 142
- Luggage compartment 143
- Roof carrier / roof rails* 151
- Drink holders 153
- Ashtray*, cigarette lighter* and power points 154
- Compartments 156

Heating, Ventilation and Air conditioning 160
- 2C-Climatronic 160

Driving 170
- Address 170
- Safety 170
- Ignition lock 171
- Starting and stopping the engine 172
- Handbrake 174
- Parking aid 175
- Cruise Control System (CCS) 178
- Manual gearbox 181

Practical tips 183

Intelligent technology 183
- Electronic stabilisation programme (ESP) 183
- Brakes 186
- Power steering 187
- Servotronic 188

Driving and the environment 189
- Running-in 189
- Exhaust gas purification system 190
- Economical and environmentally friendly driving 191
- Driving abroad 193

Trailer towing 194
Trailer towing 194
Removable towing bracket 197
Your vehicle maintenance and cleaning 205
General notes 205
Vehicle exterior maintenance 206
Vehicle interior maintenance 211
Accessories, parts replacement and modifications 214
Accessories and spare parts 214
Technical modifications 214
Mobile telephones and radiotelephones 215
Athermic windscreen* 215
Checking and refilling levels 216
Refuelling 216
Releasing the tank flap manually 217
Petrol 218
Diesel 218
The bonnet 220
Engine oil 222
Cooling system 225
Washer fluid and windscreen wiper blades 228
Brake fluid 231
Battery 232
Wheels and tyres 236
Wheels 236
If and when 245
Tools, tyre repair kit and spare wheel 245
Changing a wheel 248
Tyre repair* (Tyre-Mobility-System) 253
Fuses 256
Bulbs 258
Changing bulbs Halogen headlights 258
Changing bulbs. Bi-Xenon AFS headlights 265
Changing bulbs for rear lights (in side panel) .. 271
Changing rear light bulbs (in boot lid) 275
Side indicators 277
Luggage compartment lights 277
Registration light 278
Sunroof light 279
Jump-starting 279
Towing and tow-starting 282

Technical Data 285

General notes on the technical data 285
Outstanding information 285
Data on fuel consumption 287
Towing a trailer 288
Wheels 288
Technical Data 289
Checking fluid levels 289
Petrol engine 1.6l 75 kW (102 HP) 290
Petrol engine 1.8l 110 kW (150 HP) 291
Petrol engine 2.0l 147 kW (200 HP) 292
Diesel engine 2.0l 105 kW (143 HP) 294
Diesel engine 2.0l 125 kW (170 HP) 295
Dimensions and capacities 297

Index 299

Manual structure

What you should know before reading the on-board manual

This manual contains a description of the **equipment** supplied with the vehicle at the time of press. Some of the equipment hereunder described will not be available until a later date, or is only available in certain markets.

As this is a general manual for the EXEO ST, some of the equipment and functions described in this manual are not included in all types or versions of the model. These may vary or be modified depending on technical and market requirements, which can in no way be interpreted as deceptive advertising.

The **illustrations** are intended as a general guide, and may vary from the equipment fitted in your vehicle in some details.

The **direction indications** (left, right, front, rear) appearing in this manual refer to the normal forward working direction of the vehicle except when otherwise indicated.

The **equipment marked with an asterisk*** is supplied as standard on certain versions of the model only, it can be supplied as an option on some models, or else it is only on sale in certain countries.

® All registered marks are indicated with ®. Although the copyright symbol does not appear, it is a copyrighted mark.

▶ The section is continued on the following page.

■ This shows the **end of the section**.

WARNING

Texts preceded by this symbol contain safety information. They warn you of serious dangers, possibly involving accident or injury.

Caution

Texts preceded by this symbol draw your attention to a possible risk of damage to your vehicle.

For the sake of the environment

Texts preceded by this symbol refer to relevant points concerning environmental protection.

Note

Texts preceded by this symbol contain additional information. ■

Content

This manual is structured to provide the information you need in an organised way. The content of this Manual is divided into **sections** which belong to **chapters** (e.g. “Air conditioning”). The entire manual is divided into five large parts which are:

1. Safety First

Information on the vehicle equipment relating to passive safety such as seat belts, airbags, seats, etc.

2. Controls and equipment

Information about the distribution of controls in the driver position of your vehicle, about the seat adjustment possibilities, about how to create a suitable climate in the passenger compartment, etc.

3. Practical tips

Advice relating to the driving, caring and maintenance of your vehicle and certain problems you can solve yourself.

4. Technical Data

Figures, values and the dimensions of your vehicle.

5. Alphabetic index

At the end of this manual there is a detailed alphabetical index, this will help you to rapidly find the information you require. ■

Safety First

Safe driving

Brief introduction

Dear SEAT Driver

Safety first!

This chapter contains important information, tips, suggestions and warnings that you should read and consider for both your own safety and for your passengers safety.

WARNING

- **This manual contains important information concerning the driver's and passengers' handling of the vehicle. The other booklets in the on board manual also contain further information that you should be aware of for your own safety and for the safety of your passengers.**
- **Ensure that the onboard documentation is kept in the vehicle at all times. This is especially important when lending or selling the vehicle to another person.** ■

Safety equipment

The safety equipment listed here are part of the vehicle's passenger restraint system. They work together to help reduce the risk of injury in a wide variety of accident situations.

Your safety and the safety of your passengers should not be left to chance. In the event of an accident, the safety features incorporated in your vehicle are capable of reducing the risk of injury. These are just a few of the safety features in your SEAT:

- Three-point seat belts optimised for all seats,
- Belt force limiters for the seats,
- belt tension devices for the front seat belts,
- front airbags,
- side airbags in the front and rear seat backrests*,
- head-protection airbags*,
- knee airbag for left guide only.
- “ISOFIX” mountings* for “ISOFIX” child safety seats on the outer rear seats,
- height-adjustable head restraints,
- adjustable steering column,

These individual safety features are harmonised to provide you and your passengers with the best possible protection in accident situations. ▶

However, they can only be effective if you and your passengers sit in the correct position and adjust and use the safety equipment properly.

Therefore, this chapter explains why these safety features are so important, how they can protect you, what you need to remember when using them and how you and your passengers can gain the most benefit from them. There are also a number of important safety warnings that you and your passengers should always observe in order to minimise the risk of injury.

Safety is everyone's responsibility! ■

Before setting off

The driver is responsible for the safety of the passengers and the safe operation of the vehicle at all times.

For your own safety and the safety of your passengers, always note the following points before setting off:

- Make sure that all lights and indicators are working properly.
- Check tyre pressure.
- Make sure that all windows are clean and give good visibility to the outside.
- Secure all luggage and other items carefully ⇒ page 16.
- Make sure that no objects can interfere with the pedals.
- Adjust the front seat, head restraint and mirrors correctly.
- Make sure that the head restraints for all passengers are adjusted to the correct position.
- Make sure that children are protected with suitable safety seats and properly worn seat belts ⇒ page 46.
- Sit in a correct position. Inform your passengers as to how they should sit ⇒ page 10.
- Fasten your seat belt correctly. Make sure that your passengers do the same ⇒ page 18. ■

What affects safe driving?

Safety on the road is directly related to how you drive, and can also be affected by the passengers in the vehicle.

The driver is responsible for the safety of the vehicle and all its occupants. If your ability to drive is impaired in any way, you endanger yourself and other road users ⇒ ⚠. Therefore:

- Do not let yourself be distracted by passengers or by using a mobile phone, etc.
- Never drive when your driving ability is impaired (by medication, alcohol, drugs, etc.).
- Obey all traffic regulations and speed limits and always maintain a safe distance to the vehicle in front.
- Always adjust your speed to suit the road, traffic and weather conditions.
- Take frequent breaks on long trips. Do not drive for more than two hours without a stop. ▶

– If possible, avoid driving when you are tired or stressed.

WARNING

When driving safety is impaired during a trip, the risk of injury and accidents increases. ■

What affects driving safety?

Driving safety is largely determined by your driving style and the personal behaviour of all occupants.

As a driver, you are responsible for yourself and your passengers. When your concentration or driving safety is affected by any circumstance, you endanger yourself as well as others on the road ⇒ ⚠, for this reason:

– Do not allow yourself to be distracted from the traffic around you, e.g. by passengers or telephone conversations.

– Never drive when your driving ability is impaired (e.g. by medication, alcohol, drugs).

– Observe traffic laws and speed limits.

– Always reduce your speed as appropriate for road, traffic and weather conditions.

– When travelling long distances, take breaks regularly - at least every two hours.

– If possible, avoid driving when you are tired or are in tension.

WARNING

When driving safety is impaired during a trip, the risk of injury and accidents increases. ■

Proper sitting position for occupants

Proper sitting position for driver

The proper sitting position for the driver is important for a safe and relaxed driving.

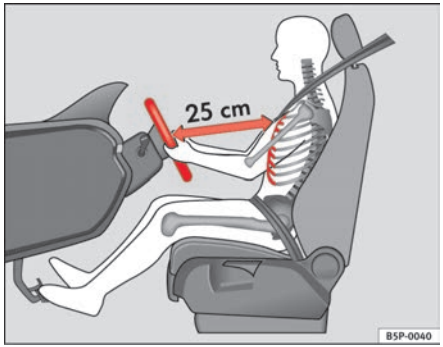

Fig. 1 The proper distance between driver and steering wheel

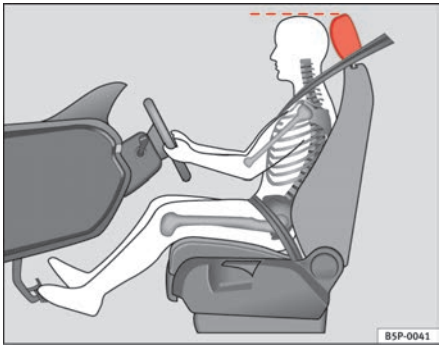

Fig. 2 Proper head restraint position for driver

For your own safety and to reduce the risk of injury in the event of an accident, we recommend the following adjustments for the driver:

- Adjust the steering wheel so that there is a distance of at least 25 cm between the steering wheel and the centre of your chest ⇒ fig. 1.
- Move the driver's seat forwards or backwards so that you are able to press the accelerator, brake and clutch pedals to the floor with your knees still slightly angled ⇒ ⚠.
- Ensure that you can reach the highest point of the steering wheel.
- Adjust the head restraint so that its upper edge is at the same level as the top of your head, or as close as possible to the same level as the top of your head ⇒ fig. 2.
- Move the backrest to an upright position so that your back rests completely against it.

– Fasten your safety belt securely ⇒ page 18.

– Keep both feet in the foot well so that you have the vehicle under control at all times.

Adjustment of the driver's seat ⇒ page 134.

WARNING

- **An incorrect sitting position of the driver can lead to severe injuries.**
- **Adjust the driver's seat so that there is at least 25 cm distance between the centre of the chest and the centre of the steering wheel ⇒ page 10, fig. 1. If you are sitting nearer than 25 cm, the airbag system cannot protect you properly.**
- **If your physical constitution prevents you from maintaining the minimum distance of 25 cm, contact a qualified workshop. The workshop will help you decide if special specific modifications are necessary.**
- **When driving, always hold the steering wheel with both hands on the outside of the ring at the 9 o'clock and 3 o'clock positions. This reduces the risk of injury when the driver airbag is triggered.**
- **Never hold the steering wheel at the 12 o'clock position, or in any other manner (e.g. in the centre of the steering wheel). In such cases, if the airbag is triggered, you may sustain injuries to the arms, hands and head.**
- **To reduce the risk of injury to the driver during sudden braking manoeuvres or an accident, never drive with the backrest tilted far back! The airbag system and seat belts can only provide optimal protection when the backrest is in an upright position and the driver is wearing his or her seat belt properly. The further the backrests are tilted to the rear, the greater the risk of injury due to incorrect positioning of the belt web or to the incorrect sitting position!**
- **Adjust the head restraint properly to achieve optimal protection.** ■

Proper sitting position for front passenger

The front passenger must sit at least 25 cm away from the dash panel so that the airbag can provide the greatest possible protection in the event that it is triggered.

For your own safety and to reduce the risk of injury in the event of an accident, we recommend the following adjustments for the front passenger:

– Move the front passenger's seat back as far as possible ⇒ ⚠.

– Move the backrest to an upright position so that your back rests completely against it.

– Adjust the head restraint so that its upper edge is at the same level as the top of your head, or as close as possible to the same level as the top of your head ⇒ page 13.

– Keep both feet in the footwell in front of the front passenger seat.

– Fasten your safety belt securely ⇒ page 18.

It is possible to deactivate the passenger airbag in **exceptional circumstances** ⇒ page 23.

Adjusting the front passenger's seat ⇒ page 134.

WARNING

- **An incorrect sitting position of the front passenger can lead to severe injuries.**
- **Adjust the front passenger seat so that there is at least 25 cm between your breastbone and the dash panel. If you are sitting nearer than 25 cm, the airbag system cannot protect you properly.**

WARNING (continued)

- **If your physical constitution prevents you from maintaining the minimum distance of 25 cm, contact a qualified workshop. The workshop will help you decide if special specific modifications are necessary.**
- **Always keep your feet in the footwell when the vehicle is moving; never rest them on the instrument panel, out the window or on the seat. An incorrect sitting position exposes you to an increased risk of injury in case of a sudden braking or an accident. If the airbag is triggered, you could sustain severe injuries due to an incorrect sitting position.**
- **To reduce the risk of injury to the front passenger in events such sudden braking manoeuvres or an accident, never travel with the backrest tilted far back! The airbag system and seat belts can only provide optimal protection when the backrest is in an upright position and the front passenger is wearing his or her seat belt properly. The further the backrests are tilted to the rear, the greater the risk of injury due to incorrect positioning of the belt web or to the incorrect sitting position!**
- **Adjust the head restraint properly in order to achieve maximum protection.** ■

Correct sitting position for passengers in the rear seats

Passengers in the rear seats must sit up straight, keep their feet in the foot well s and wear their seat belts properly.

To reduce the risk of injury in the event of a sudden braking manoeuvre or an accident, passengers on the rear bench seat must consider the following:

– Adjust the headrest to the correct position ⇒ page 14.

– Keep both feet in the foot well in front of the rear seat.

– Fasten your safety belt securely ⇒ page 18.

– Use an appropriate child restraint system when you take children in the vehicle ⇒ page 46.

WARNING

- **If the passengers on the rear seat are not sitting properly, they could sustain severe injuries.**
- **Adjust the head restraint properly in order to achieve maximum protection.**
- **Seat belts can only provide optimal protection when backrests are in an upright position and the passengers are wearing their seat belts properly. If passengers on the rear seat are not sitting in an upright position, the risk of injury due to incorrect positioning of the belt web increases.** ■

Correct adjustment of front seat head restraints

Properly adjusted head restraints are an important part of passengers protection and can reduce the risk of injuries in most accident situations.

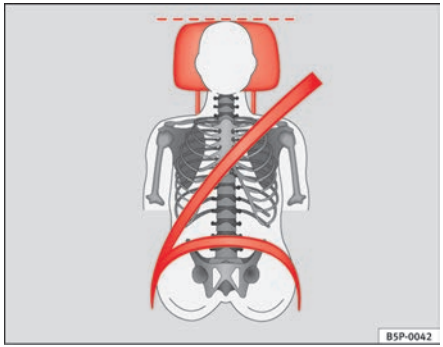

Fig. 3 Properly adjusted head restraint viewed from the front

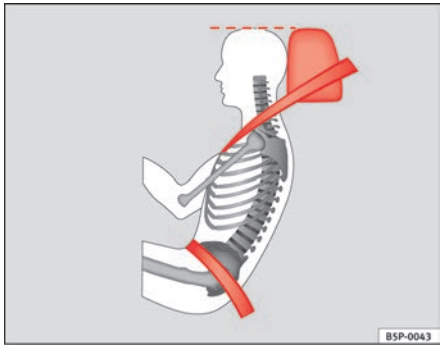

Fig. 4 Properly adjusted head restraint viewed from the side

Adjust the head restraint properly in order to achieve maximum protection.

– Adjust the head restraint so that its upper edge is at the same level as the top of your head or as close as possible to the same level as the top of your head and, at the very least, at eye level ⇒ fig. 3 and ⇒ fig. 4.

Adjusting the head restraints ⇒ page 134.

WARNING

- **Travelling with the head restraints removed or improperly adjusted increases the risk of severe injuries.**
- **Incorrectly adjusted head restraints could result in death in the event of a collision or accident.**
- **Incorrectly adjusted head restraints also increase the risk of injury during sudden or unexpected driving or braking manoeuvres.**
- **The head restraints must always be adjusted according to the passenger's height.** ■

Correct adjustment of rear seat head restraints

Properly adjusted head restraints are an important part of the occupant protection and can reduce the risk of injuries in most accident situations

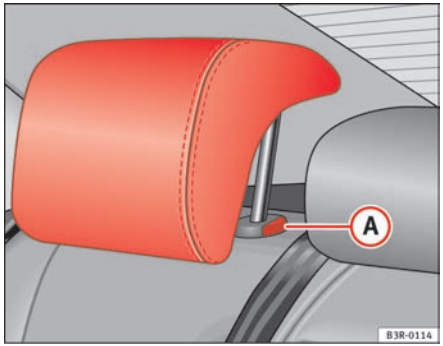

Fig. 5 Outer rear seats: Head restraints

Raising the head restraint

– Take hold of the sides of the head restraint with both hands.

– Pull the head restraint up as far as it will go.

Lowering the head restraint

– Press button (A) ⇒ fig. 5 and lower the head restraint.

Removing the head restraint

– Pull the head restraint up as far as it will go.

– Press button (A) ⇒ fig. 5 and pull out the head restraint.

Fitting the head restraint

– Insert the head restraint in its guides until it clicks into place. Press button (A) and lower the head restraint.

WARNING

- **Under no circumstances should the rear passengers travel while the head restraints are in the non-use position.**
- **Do not swap the centre rear head restraint with either of the outer seat rear head restraints.**
- **Injury risk in case of an accident!**

Caution

Note the instructions on the adjustment of the head restraints ⇒ page 13. ■

Examples of incorrect sitting positions

An incorrect sitting position can lead to severe injuries to occupants.

Seat belts can provide optimal protection only when the belt webs are properly positioned. Incorrect sitting positions substantially reduce the protective function of seat belts and increase the risk of injury due to incorrect belt web position. As the driver, you are responsible for all vehicle occupants, especially children.

– Never allow anyone to assume an incorrect sitting position in the vehicle while travelling ⇒ ⚠. ▶

The following list contains examples of sitting positions that could be dangerous for all occupants. The list is not complete, but we would like to make you aware of this issue.

Therefore, whenever the vehicle is in motion:

- Never stand in the vehicle,
- never stand on the seats,
- never kneel on the seats,
- never tilt your backrest far to the rear,
- never lean against the dash panel,
- never lie on the rear bench,
- never sit on the front edge of a seat,
- never sit sideways,
- never lean out of a window,
- never put your feet out of a window,
- never put your feet on the dash panel,
- never put your feet on the surface of a seat,
- never travel in a foot well ,
- never travel on a seat without wearing the seat belt,
- never carry any person in the luggage compartment.

WARNING

- **Every incorrect sitting position increases the risk of severe injuries.**
- **Sitting in an incorrect position exposes the occupants to severe injuries if airbags trigger, by striking a passenger who has assumed an incorrect sitting position.**
- **Before the vehicle moves, assume the proper sitting position and maintain it throughout the trip. Before every trip, instruct your passengers to sit properly and to stay in this position during the trip ⇒ page 10, “Proper sitting position for occupants”.** ■

Pedal area

Pedals

The operation of all pedals must never be impaired by objects or floor mats.

– Ensure that you can always press the accelerator, brake and clutch pedals unimpaired to the floor.

– Ensure that the pedals can return unimpaired to their initial positions.

Use only floor mats which leave the pedal area free and can be securely fastened on the foot well.

If a brake circuit fails, the brake pedal must be pressed down thoroughly in order to stop the vehicle.

Wear suitable shoes

Always wear shoes which support your feet properly and give you a good feeling for the pedals.

WARNING

- **Restricting pedal operation can lead to critical situations while driving.**
- **Never place objects on the driver footwell. An object could move into the pedal area and impair pedal operation. In the event of a sudden driving or braking manoeuvre, you will not be able to operate the brake, clutch or accelerator pedal. Risk of accident!** ■

Floor mats on the driver side

Only floor mats may be used which can be securely fastened in the foot well and do not impair operation of the pedals.

– Ensure that the floor mats are securely fastened during the trip and do not obstruct the pedals ⇒ ⚠.

Only use floor mats which leave the pedals clear and which are secured to prevent them from slipping. You can obtain suitable floor mats from a qualified dealership.

⚠ WARNING

- **If the pedals are obstructed, an accident may occur. Risk of serious injuries.**
- **Ensure that the floor mats are always securely attached.**
- **Never lay or fit floor mats or other floor coverings over the original floor mats. This would reduce the pedal area and could obstruct the pedals. Risk of accident.** ■

Stowing luggage

Loading the boot

All luggage and other loose objects must be safely secured in the luggage compartment.

Unsecured objects which shift back and forth could impair the driving safety or driving characteristics of the vehicle by shifting the centre of gravity.

– Distribute the load evenly in the luggage compartment.

– Lay and stow heavy luggage as far forward as possible in the luggage compartment.

– Stow heavy luggage as low as possible in the luggage compartment.

– Secure heavy objects to the fitted fastening rings ⇒ page 17.

⚠ WARNING

- **Loose luggage and other objects in the boot could cause serious injuries.**
- **Always stow objects in the luggage compartment and secure them on the fastening rings.**
- **Use suitable specialist straps to secure heavy objects.**
- **During sudden manoeuvres or accidents, loose objects can be thrown forward, injuring vehicle occupants or passers-by. This increased risk of injury will be further increased if a loose object is struck by an inflating airbag. If this happens, objects can be transformed into “missiles”. Risk of fatal injury.**
- **Please note that the centre of gravity may shift when transporting heavy objects; this may affect the vehicle's handling and lead to an accident. Therefore, it is essential to adjust your speed and driving style accordingly, to avoid accidents.**
- **Never exceed the allowed axle loads or allowed maximum weight. If the allowed axle load or the allowed total weight is exceeded, the driving characteristics of the vehicle may change, leading to accidents, injuries and damage to the vehicle.**
- **Never leave your vehicle unattended, especially when the tailgate is open. Children could climb into the luggage compartment closing the door** ▶

WARNING (continued)

behind them; they will remain trapped without help and there is a mortal risk.

- **Never allow children to play in or around the vehicle. Close and lock both the tailgate and all the doors when you leave the vehicle. Before you lock the vehicle, make sure that there are no adults or children in the vehicle.**
- **Never transport passengers in the luggage compartment. Every passenger must be properly belted in ⇒ page 18.**

Note

- Air circulation in the vehicle helps reduce fogging of the windows. Used air escapes through ventilation slits in the side trim of the luggage compartment. Ensure that the ventilation slits are never covered.
- Straps for securing the load to the fastening rings are commercially available. ■

Fastening rings

There can be four fastening rings in the boot for fastening luggage and other objects.

– Always use suitable and undamaged straps to secure luggage and other objects to the fastening rings ⇒ ⚠ in "Loading the boot" on page 16.

– Pull up the fastening rings to attach the straps.

During a collision or an accident, even small and light objects can build up so much energy that they can cause very severe injuries. The amount of "kinetic energy" depends on the speed of the vehicle and the weight of the object. The most significant factor, however, is the speed of the vehicle.

Example: An object weighing 4.5 kg is lying unsecured in the vehicle. During a frontal collision at a speed of 50 km/h, this object generates a force corresponding to 20 times its weight. That means that the effective weight of the object increases to about 90 kg. You can imagine the severity of the injuries which might be sustained if this "projectile" strikes an occupant as it flies through the passenger compartment. This increased risk of injury will be further increased if a loose object is struck by an inflating airbag.

WARNING

- **If pieces of baggage or other objects are secured to the fastening rings with inappropriate or damaged retaining cords, injuries could result in the event of braking manoeuvres or accidents.**
- **To prevent pieces of luggage or other objects from flying forward, always use appropriate retaining cords which are secured to the fastening rings.**
- **Never secure a child seat on the fastening rings.** ■

Seat belts

Brief introduction

Before driving: remember your seat belt!

Wearing a seat belt properly can save your life!

In this chapter you will learn the importance of wearing seat belts, how they work and how to properly fasten, adjust and wear them.

– Read and consider all the information as well as the warnings in this chapter.

WARNING

- **If seat belts are worn incorrectly or not at all, the risk of severe injuries increases.**
- **Properly worn seat belts can reduce severe injuries in case of sudden braking manoeuvres or accidents. For safety reasons, you and your passengers must always wear the seat belts properly while the vehicle is moving.**
- **Pregnant women or people with physical disabilities must also use seat belts. Like all other passengers, these people can also sustain severe injuries if they are not wearing their seat belts properly.** ■

Number of seats

Your vehicle has **five** seats, two in the front and three in the rear. Each seat is equipped with a three-point seat belt.

WARNING

- **More people than available seats must never be transported in your vehicle.**
- **Every passenger in the vehicle must properly fasten and wear the seat belt belonging to his or her seat. Children must be protected with an appropriate child restraint system.** ■

Seat belt warning lamp*

The warning lamp acts as a reminder to the driver to fasten the seat belt.

Before starting the vehicle:

– Fasten your safety belt securely.

– Instruct your passengers to fasten their seat belts properly before driving off.

– Protect children by using a child seat according to the child's height and weight.

After switching on the ignition, the warning light will remain lit until the driver and front passenger (where applicable) have fastened their seat belts. When the vehicle has reached a certain speed, you will also hear a warning signal and the warning light will flash. ■

Why wear seat belts?

Physical principles of frontal collisions

In the event of a frontal collision, a large amount of kinetic energy must be absorbed.

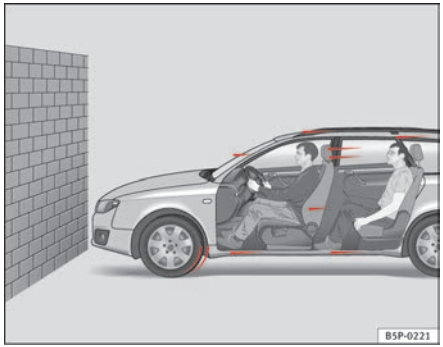

Fig. 6 Vehicle about to hit a wall: the occupants are not wearing seat belts

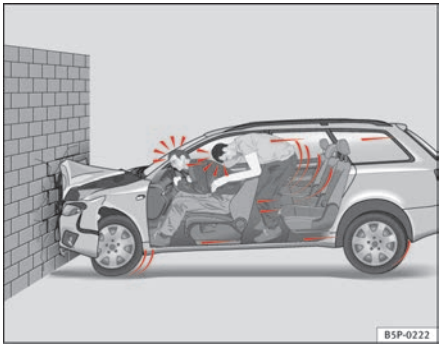

Fig. 7 The vehicle hits the wall: the occupants are not wearing seat belts

It is easy to explain how the laws of physics work in the case of a head-on collision: When a vehicle starts moving ⇒ fig. 6, a certain amount of energy known as “kinetic energy” is produced in the vehicle and its occupants.

The amount of “kinetic energy” depends on the speed of the vehicle and the weight of the vehicle and its passengers. The higher the speed and the greater the weight, the more energy there is to be “released” in an accident.

The most significant factor, however, is the speed of the vehicle. If the speed doubles from 25 km/h to 50 km/h, for example, the kinetic energy is multiplied by four.

Because the passengers in our example are not restrained by seat belts, all of the passengers' kinetic energy has to be absorbed at the point of impact ⇒ fig. 7.

Even at speeds of 30 km/h to 50 km/h, the forces acting on bodies in a collision can easily exceed one tonne (1000 kg). At greater speed these forces are even higher.

Passengers not wearing seat belts are not “attached” to the vehicle. In a frontal collision, they will move forward at the same speed their vehicle was ▶

travelling just before the impact. This example applies not only to frontal accidents, but to all accidents and collisions. ■

The danger of not using the seat belt

The general belief that the passengers can protect themselves with their hands in a minor collision is false.

Fig. 8 A driver not wearing a seat belt is thrown forward violently.

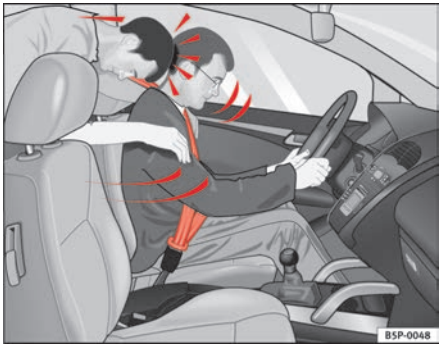

Fig. 9 The unbelted rear passenger is thrown forward violently, hitting the driver wearing a seat belt.

Even at low speeds the forces acting on the body in a collision are so great that it is not possible to brace oneself with one's hands. In a frontal collision, unbelted passengers are thrown forward and will make violent contact with the steering wheel, dashboard, windscreen or whatever else is in the way ⇒ fig. 8.

The airbag system is not a substitute for the seat belts. When triggered, airbags provide only additional protection. All passengers (including the driver) must wear seat belts properly during the trip. This will reduce the risk of severe injuries in the event of an accident – regardless of whether an airbag is fitted for the seat or not.

Note that airbags can be triggered only once. To achieve the best possible protection, the seat belt must always be worn properly so that you will be protected in accidents in which no airbag is deployed.

It is also important for the rear passengers to wear seat belts properly, as they could otherwise be thrown forward violently in an accident. Rear passengers who do not use seat belts endanger not only themselves but also the front occupants ⇒ fig. 9. ■

Seat belt protection

Passengers not wearing seat belts risk severe injuries in the event of an accident.

Fig. 10 A driver wearing the seat belt properly: is secured by the belt in sharp braking

Properly worn seat belts hold the vehicle occupants in the correct sitting positions and substantially reduce the kinetic energy in the event of an accident. Seat belts also help to prevent uncontrolled movements that could lead to severe injuries. In addition, properly worn seat belts reduce the danger of being thrown from the car.

Passengers wearing their seat belts correctly benefit greatly from the ability of the belts to absorb kinetic energy. The front part of your vehicle and other passive safety features (such as the airbag system) are also designed to absorb the kinetic energy released in a collision. Taken together, all these features reduce the releasing kinetic energy and consequently, the risk of injury.

Our examples describe frontal collisions. Of course, properly worn seat belts substantially reduce the risk of injury in all other types of accidents. This is why it is so important to fasten seat belts before every trip, even when "just driving around the corner".

Ensure that your passengers wear their seat belts as well. Accident statistics have shown that wearing seat belts is an effective means of substantially reducing the risk of injury and improving the chances of survival in a serious accident. Furthermore, properly worn seat belts improve the protection provided by airbags in the event of an accident. For this reason, wearing a seat belt is required by law in most countries.

Although your vehicle is equipped with airbags, the seat belts must be fastened and worn. The front airbags, for example, are only triggered in some frontal accidents. The front airbags will not be triggered during minor frontal collisions, minor side collisions, rear collisions, rolls or accidents in which the airbag trigger threshold value in the control unit is not exceeded.

Therefore, you should always wear your seat belt and ensure that your passengers have fastened their seat belts properly before you drive off! ■

Safety instructions on using seat belts

If seat belts are used correctly, they can reduce the risk of injury in an accident.

– Always wear the seat belt as described in this section.

– Ensure that the seat belts can be fastened at all times and are not damaged.

WARNING

- **If the seat belts are worn incorrectly or not at all, the risk of severe injuries increases. The optimal protection from seat belts can be achieved only if you use them properly.**

⚠ WARNING (continued)

- Fasten your seat belt before every trip - even when driving in town. The other passengers must also wear seat belts, otherwise they may be in danger of injury!
- The seat belt cannot offer its full protection if the belt web is not positioned correctly.
- Never allow two passengers (even children) to share the same seat belt.
- Keep both feet in the foot-well in front of your seat as long as the vehicle is in motion.
- Never unbuckle a seat belt while the vehicle is in motion. Risk of fatal injury.
- The belt webbing must never be twisted while it is being worn.
- The belt webbing should never lie on hard or fragile objects (such as glasses or pens, etc.) because this can cause injuries.
- Do not allow the seat belt to be damaged or jammed, or to rub on any sharp edges.
- Never wear the seat belt under the arm or in any other incorrect position.
- Loose, bulky clothing (such as an overcoat over a jacket) impairs the proper fit and function of the belts, reducing their capacity to protect.
- The slot in the seat belt buckle must not be blocked with paper or other objects, as this can prevent the latch plate from engaging securely.
- Never use seat belt clips, retaining rings or similar instruments to alter the position of the belt webbing.
- Frayed or torn seat belts or damage to the connections, belt retractors or parts of the buckle could cause severe injuries in the event of an accident. Therefore, you must check the condition of all seat belts at regular intervals.
- Seat belts which have been worn in an accident and stretched must be replaced by a qualified workshop. Renewal may be necessary even if there is no apparent damage. The belt anchorage should also be checked.

⚠ WARNING (continued)

- Do not attempt to repair a damaged seat belt yourself. The seat belts must not be removed or modified in any way.
- The belts must be kept clean, otherwise the retractors may not work properly ⇒ page 213. ■

Seat belts

Seat belt adjustment

The seat belts for the front and rear occupants are locked into position by a latch.

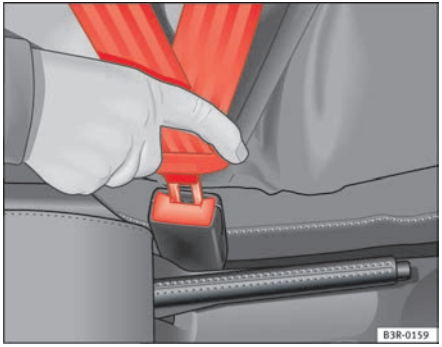

Fig. 11 Belt buckle and latch plate of seat belt

The seat belt cannot offer its full protection if the belt web is not positioned correctly.

– Adjust the seat and head restraint correctly.

– To fasten the belt, take hold of the latch plate and pull it slowly across your chest and lap.

– Insert the latch plate into the buckle for the appropriate seat and push it down until it is securely locked with a click ⇒ page 22, fig. 11.

– Pull the belt to ensure that the latch plate is securely engaged in the buckle.

The seat belts are equipped with an automatic retractor on the shoulder strap. Full freedom of movement is permitted when the shoulder belt is pulled slowly. However, during sudden braking, during travel in mountains or bends and during acceleration, the automatic retractor on the shoulder belt is locked.

The automatic belt retractors on the front seats are fitted with belt tension devices ⇒ page 26.

WARNING

- **An incorrectly worn seat belt web can cause severe injuries in the event of an accident.**
- **The seat belts offer best protection only when the backrests are in an upright position and the seat belts have been fastened properly.**
- **Never put the latch plate in the buckle of another seat. If you do this, the seat belt will not protect you properly and the risk of injury is increased.**
- **If an occupant is incorrectly belted in, the belt cannot protect him or her properly. An incorrectly positioned belt web can cause extremely severe injuries.** ■

Seat belt position

Seat belts offer their maximum protection only when they are properly positioned.

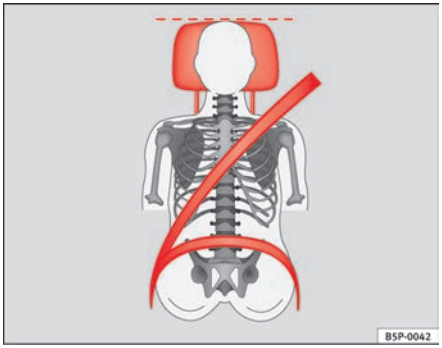

Fig. 12 Correct belt web and head restraint positions, viewed from front

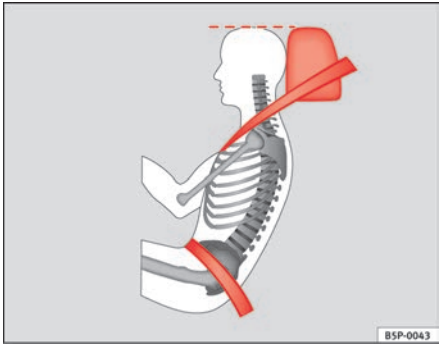

Fig. 13 Correct belt web and head restraint positions, viewed from side

The following features are available to adjust the seat belt in the shoulder region:

- belt height adjustment for the front seats.
- front seat height adjustment*.

WARNING

- **An incorrectly worn seat belt web can cause severe injuries in the event of an accident.**
- **The shoulder part of the seat belt must lie on the centre of the shoulder, never across the neck. The seat belt must lie flat and snugly on the torso ⇒ page 23, fig. 12.**
- **The lap part of the seat belt must lie across the pelvis, never across the stomach. The seat belt must lie flat and snugly on the pelvis ⇒ page 23, fig. 13. Pull the belt tight if necessary to take up any slack.**
- **Read and observe the warnings ⇒ page 21.** ■

Pregnant women must also fasten their seat belts properly

The best protection for the unborn child is for the mother to wear the seat belt properly at all times during the pregnancy.

Fig. 14 Positioning seat belts during pregnancy

The seat belt provides maximum protection only when the belt web is properly positioned ⇒ page 23.

– Adjust the front seat and head restraint correctly ⇒ page 10.

– Holding the latch plate, pull the belt evenly across your chest and as low as possible over the pelvis ⇒ fig. 14.

– Insert the latch plate into the buckle for the appropriate seat and push it down until it is securely locked with a click ⇒ ⚠.

– Pull the belt to ensure that the latch plate is securely engaged in the buckle. ▶

WARNING

- **An incorrectly worn seat belt web can cause severe injuries in the event of an accident.**
- **For pregnant women, the lap part of the seat belt must lie as low as possible over the pelvis, never across the stomach, and always lie flat so that no pressure is exerted on the abdomen.**
- **Read and observe the warnings ⇒ page 21.** ■

Seat belt release

The seat belt must not be unfastened until the vehicle has come to a standstill.

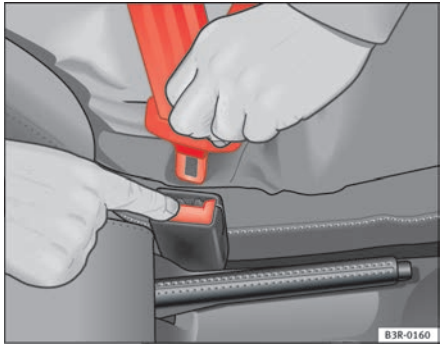

Fig. 15 Removing latch plate from buckle

– Press the red button on the belt buckle ⇒ fig. 15. The latch plate is released and springs out ⇒ ⚠.

– Guide the belt back by hand so that it rolls up easily and the trim is not damaged

WARNING

Never unbuckle a seat belt while the vehicle is in motion. If you do, you increase the risk of sustaining severe or fatal injuries. ■

Seat belt height adjustment

Seat belt height adjusters can be used to adjust the height of the shoulder area of the seat belt.

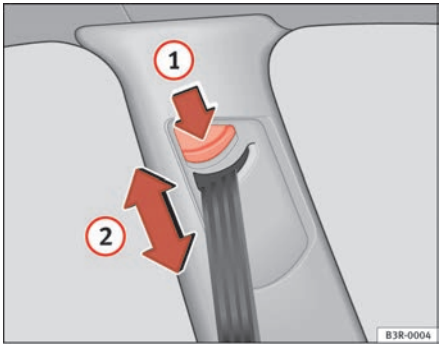

Fig. 16 Belt height adjustment - top guide fitting

The belt height adjuster can be lowered by keeping the button pressed down at the same time.

– Press button ⇒ fig. 16 (1) to adjust the belt height. ▶

– Take hold of the top guide fitting and slide it up or down so that the shoulder part of the seat belt is positioned roughly midway over the shoulder, although **it must never rest against the neck** ⇒ page 25, fig. 16 (2) ⇒ ⚠ in “Seat belt position” on page 23.

– After adjusting, pull the belt sharply to check that the catch on the guide fitting is engaged securely.

Note

It is also possible to adjust the height of the front seats to obtain the best position for the front seat belts. ■

Incorrectly fastened seat belts

Incorrectly worn seat belts can cause severe or even mortal injuries.

Seat belts can provide optimal protection only if the belt web is properly worn. The seat belts must be fastened exactly in the order described in this chapter. An incorrect sitting position impairs substantially the protection a seat belt offers and can lead to severe or fatal injuries. The risk of severe or fatal injuries is especially increased when a deploying airbag strikes an occupant who has assumed an incorrect sitting position. As the driver, you are responsible for all vehicle occupants, especially children. Therefore:

– Never allow anyone to wear the seat belt incorrectly while the vehicle is moving ⇒ ⚠.

WARNING

- **An incorrectly worn seat belt increases the risk of severe injuries.**
- **Before every trip, instruct your passengers to adjust their seat belts properly and to wear them for the whole journey.**
- **Read and always observe information and warnings concerning the use of seat belts** **⇒ page 21.** ■

Belt tension devices

Function of the belt tension device

During a frontal collision, the seat belts on the front seats are retracted automatically.

The seat belts for the front occupants are equipped with belt tension devices. Sensors will trigger the belt tension devices during severe head-on, lateral and rear collisions only if the seat belt is being worn. This retracts and tightens the seat belts, reducing the forward motion of the occupants.

The belt tension device can be triggered only once.

The belt tension devices will not be triggered in the event of a light frontal, side or rear collision, if the vehicle overturns or in situations where no large forces act on the front, side or rear of the vehicle.

Note

- If the belt tension devices are triggered, a fine dust is produced. This is normal and it is not an indication of fire in the vehicle. ▶

- The relevant safety requirements must be observed when the vehicle or components of the system are scrapped. A qualified workshop is familiar with these regulations and will be pleased to pass on the information to you. ■

Service and disposal of belt tension devices

The belt tension devices are components of the seat belts that are installed in the seats of your vehicle. If you work on the belt tension devices or remove and install parts of the system when performing other repair work, the seat belt may be damaged. The consequence may be that, in the event of an accident, the belt tension devices function incorrectly or not at all.

So that the effectiveness of the belt tension device is not reduced and that removed parts do not cause any injuries or environmental pollution, regulations, which are known to the qualified workshops, must be observed.

WARNING

- **If repairs are not carried out by a professional, or if the belt tension devices are used incorrectly, the risk of severe or fatal injuries increases. The belt tension devices may fail to trigger or may trigger in the wrong circumstances.**
- **Never attempt to repair, adjust, remove or install parts of the belt tension devices or seat belts.**
- **The belt tension device and seat belt including its automatic retractor cannot be repaired.**
- **Any work on the belt tension devices and seat belts, including the removal and refitting of system parts in conjunction with other repair work, must be performed by a qualified workshop only.**
- **The belt tension devices will only provide protection for one accident and must be changed it they have been activated.** ■

Airbag system

Brief introduction

Why wear a seat belt and assume the correct sitting position?

For the inflating airbags to achieve the best protection, the seat belt must always be worn properly and the correct sitting position must be assumed.

For your own safety and the safety of the passengers, please ensure the following before driving:

- Always wear the seat belt properly ⇒ page 18.
- Adjust the driver's seat and the steering wheel correctly ⇒ page 10.
- Adjust the front passenger seat correctly ⇒ page 11.
- Adjust the head restraint correctly ⇒ page 13.
- Use the correct child restraint system to protect children in your vehicle ⇒ page 46.

The airbag is deployed at high speed in fractions of a second. If you have an incorrect seating position at the time the airbag is deployed, it could cause you critical injuries. Therefore, it is essential that all passengers in the vehicle assume a correct sitting position while travelling.

A sharp braking before an accident may cause a passenger not wearing a seat belt to be thrown forward into the area of the deploying airbag. In this case, the inflating airbag may inflict critical or fatal injuries on the occupant. This also applies to children.

Always maintain the greatest possible distance between yourself and the front airbag. This way, the front airbags can completely deploy when triggered, providing their maximum protection.

The most important factors that will trigger an airbag are: the type of accident, the angle of collision and the speed of the vehicle.

Whether the airbags are triggered depends primarily on the vehicle deceleration rate resulting from the collision and detected by the control unit. If the vehicle deceleration occurring during the collision and measured by the control unit remains below the specified reference values, the front, side and/or curtain airbag will not be triggered. Take into account that the visible damage in a vehicle involved in an accident, for whatever reason, is not an indication as to why the airbags had been triggered.

WARNING

- **Wearing the seat belt incorrectly or assuming an incorrect sitting position can lead to critical or fatal injuries.**
- **All occupants, including children, who are not properly belted can sustain critical or fatal injuries if the airbag is triggered. You should always transport all children up to 12 years of age on the rear seat. Never transport children in the vehicle if they are not restrained or the restraint system is not appropriate for their age, size or weight.**
- **If you are not wearing a seat belt, if you lean forward or to the side while travelling or assume an incorrect sitting position, there is a substantially increased risk of injury. This increased risk of injury will be further increased if you are struck by an inflating airbag.**
- **To reduce the risk of injury from an inflating airbag, always wear the seat belt properly ⇒ page 18.**

⚠ **WARNING (continued)**

- **Always properly adjust the front seats.** ■

The danger of fitting a child seat on the front passenger seat

Rear-facing child seats must never be used on the front passenger seat when the front passenger airbag is enabled.

An enabled front airbag on the front passenger side is potentially a major danger to a child. The front passenger seat is life threatening to a child if he/she is transported in a rear-facing child seat. You should always transport all children up to 12 years of age on the rear seat.

If a rear-facing child seat is secured to the front passenger seat, an inflating airbag can strike it with such great force that critical or fatal injuries may result.

Therefore we strongly recommend you to transport children on the rear seats. That is the safest place for children in the vehicle. Alternatively, the front passenger airbag can be disabled with a key-operated switch ⇒ page 44. When transporting children, use a child seat appropriate to the age and size of each child ⇒ page 46.

For those vehicles that do not include a key lock switch to turn the airbag off, an Authorised Service Centre must be consulted.

⚠ **WARNING**

- **If a child seat is secured to the front passenger seat, the risk to the child of sustaining critical or fatal injuries in the event of an accident increases.**
- **Never secure a rear-facing child seat to the front passenger seat if the front passenger airbag is enabled. The child can suffer critical or fatal injuries when the front passenger airbag is triggered.**

⚠ **WARNING (continued)**

- **An inflating front passenger airbag can strike the rear-facing child seat and hurl it with great force against the door, the roof or the backrest.**
- **If, under special circumstances, it is necessary to transport a child in a rear-facing child seat on the front passenger seat, it is absolutely essential that you observe the following safety measures:**
  - **Disable the front passenger airbag ⇒ page 44, “Deactivating airbags*”.**
  - **The child seat must be approved by the child seat manufacturer for use on a front passenger seat with front or side airbag.**
  - **Follow the installation instructions given by the child seat manufacturer and observe the safety instructions ⇒ page 46, “Child safety”.**
  - **Before properly installing the child seat, push the front passenger seat completely backwards so that the greatest possible distance to the front passenger airbag is ensured.**
  - **Ensure that no objects prevent the front passenger seat from being pushed completely back.**
  - **The backrest of the front passenger seat must be in an upright position.** ■

Warning lamp for airbag and belt tension device system

This warning lamp monitors the airbag and belt tension device system.

The warning lamp monitors all airbags and belt tension devices in the vehicle, including control units and wiring connections. ▶

Monitoring of airbag and belt tension device system

Both the airbag and belt tension device systems operation is constantly monitored electronically. The warning lamp will light up for a few seconds every time the ignition is switched on (self-diagnosis).

The system must be checked when the warning lamp :

- does not light up when the ignition is switched on,
- after the ignition is switched on, it turns off after 4 seconds,
- it turns off and then lights up again after the ignition is switched on,
- lights up or flashes while the car is moving.

In the event of a malfunction, the warning lamp remains on continuously. Have the airbag system inspected immediately by a qualified workshop.

If any of the airbags are de-activated by the Authorised Service Centre, the indicator lights for several seconds more after the verification and will turn off if there is no fault.

WARNING

- **If there is a malfunction, the airbag and belt tension device system cannot properly perform its protective function.**
- **If a malfunction occured, have the system checked immediately by a qualified workshop. Otherwise, in the event of an accident, the airbag system and belt tension devices may not be triggered, or may not be triggered correctly.** ■

Repairs, maintenance and disposal of the airbags

The parts of the airbag system are installed in various places in your vehicle. If you work on the airbag system or remove and fit parts of the system when performing other repair work, parts of the airbag system may be damaged.

The consequence may be that, in the event of an accident, the airbag inflates incorrectly or does not inflate at all.

The relevant safety requirements must be observed when the vehicle or components of the airbag are **scrapped**. The specialist workshops and the Vehicle disposal centres are familiar with these requirements.

WARNING

- **If repairs are not carried out by a professional, or if the airbags are used incorrectly, the risk of severe or fatal injuries is increased. The airbags may fail to inflate, or could inflate in the wrong circumstances.**
- **Do not cover or stick anything on the steering wheel hub or the soft plastic surface of the airbag unit on the passenger side of the dashboard, and do not obstruct or modify them in any way.**
- **It is important not to attach any objects such as cup holders or telephone mountings to the surfaces covering the airbag units.**
- **To clean the steering wheel or dash panel, you may use only a dry or a water-moistened cloth. Never clean the dash panel and the airbag module surface with cleansers containing solvents. Solvents cause the surface to become porous. If the airbag triggered, disintegrating plastic parts could cause substantial injuries.**
- **Never attempt to repair, adjust, remove or install parts of the airbag system.**
- **Any work on the airbag system or removal and installation of the airbag components for other repairs (such as repairs to the steering wheel) should be performed only by a qualified workshop. Qualified workshops have the necessary tools, repair information and qualified personnel.**
- **We strongly recommend you to go to a qualified workshop for all work on the airbag system.**
- **Never attempt to alter the front bumper or the body.**
- **The airbags provide protection for just one accident; replace them once they have deployed.** ■

Front airbags

Description of front airbags

The airbag system is not a substitute for the seat belts.

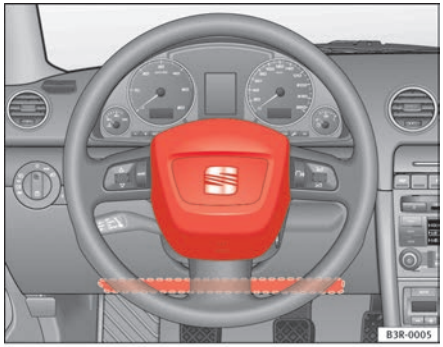

Fig. 17 Driver's Airbag in the steering wheel and knee airbag in the instrument panel

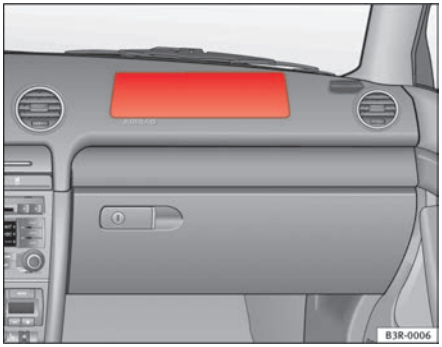

Fig. 18 Front passenger airbag located in dash panel

The front airbag for the driver is located in the steering wheel ⇒ fig. 17 and the airbag for the front passenger is located in the instrument panel ⇒ fig. 18. Airbags are identified by the word “AIRBAG”. On the driver's side, the knee airbag* is found in the front footwell, under the instrument panel.

In conjunction with the seat belts, the front airbag system gives the front occupants additional protection for the head and chest in the event of a severe frontal collision ⇒ page 34, “Safety notes on the frontal airbag system”.

In addition to their normal function of restraining the occupants, the seat belts also hold the driver and front passenger in a position where the airbags can provide maximum protection in a frontal collision.

The airbag system is not a substitute for seat belts, but it is an integral part of the vehicle's overall passive safety system. Please bear in mind that the airbag system can only work effectively when the occupants are wearing their seat belts correctly and have adjusted the head restraints properly. Therefore, it is most important to wear the seat belts at all times, not only because this is required by law in most countries, but also for your safety ⇒ page 18, “Brief introduction”.

The main parts of the front airbag system are:

- an electronic control and monitoring system (control unit),
- the two front airbags (airbag with gas generator) for the driver and front passenger,
- a knee airbag* for the driver,
- a warning lamp in the dash panel insert ⇒ page 29.

The airbag system operation is monitored electronically. The airbag warning lamp will light up for a few seconds every time the ignition is switched on (self-diagnosis).

There is a fault in the system if the warning lamp

- does not light up when the ignition is switched on ⇒ page 29
- after the ignition is switched on, it turns off after 4 seconds,
- it turns off and then lights up again after the ignition is switched on,
- lights up or flashes while the car is moving.

The front airbag system will not be triggered if:

- the ignition is switched off,
- there is a minor frontal collision,
- there is a side collision,
- there is a rear-end collision,
- the vehicle turns over.

WARNING

- **The seat belts and airbags can only provide maximum protection if the occupants are seated correctly ⇒ page 10, "Proper sitting position for occupants".**
- **If a fault has occured in the airbag system, have the system checked immediately by a qualified workshop. Otherwise, during a frontal collision the system may fail to trigger, or not trigger correctly.** ■

Operation of frontal airbags

Inflated airbags reduce the risk of head or chest injury.

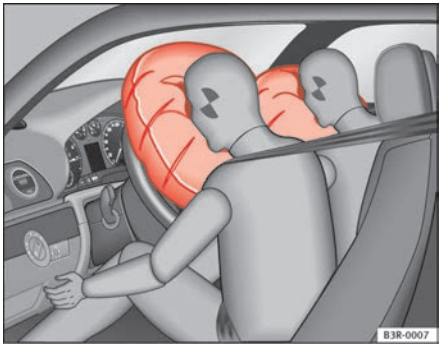

Fig. 19 Inflated front airbags

The airbag system is designed so that the airbags for the driver and front passenger are triggered in a severe frontal collision.

In certain types of accident the front, curtain and side airbags may be triggered together.

When the system is triggered, the airbags fill with a propellant gas and deploy in front of the driver and front passenger ⇒ fig. 19. The fully deployed airbags cushion the forward movement of the front occupants and help to reduce the risk of injury to the head and the upper part of the body.

The special design of the airbag allows the controlled escape of the propellant gas when an occupant puts pressure on the bag. Thus, the head and chest are surrounded and protected by the airbag. After the collision, the airbag deflates sufficiently for the front occupants to see forward.

In order to provide the desired extra protection in an accident, the airbags have to deploy extremely rapidly (within thousandth of a second). A fine dust ▶

may develop when the airbag deploys. This is normal and it is not an indication of fire in the vehicle. ■

Airbag covers when the frontal airbags are triggered

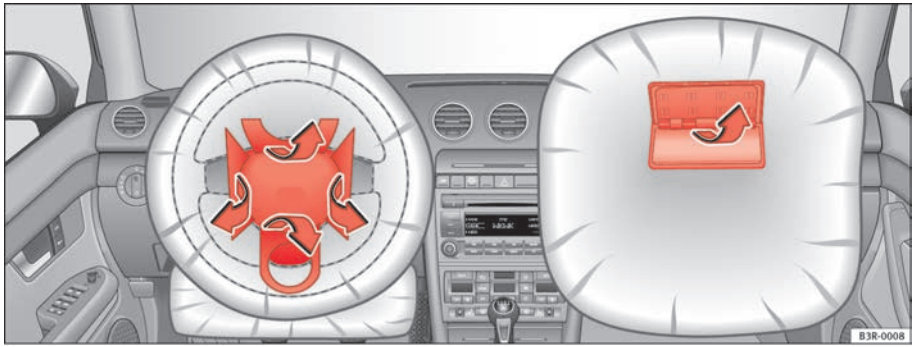

Fig. 20 Airbag covers reacting when the front airbags are triggered

The airbag covers fold out of the steering wheel or instrument panel when the driver's and front passenger's airbags are triggered ⇒ fig. 20. The airbag covers remain connected to the steering wheel or the dash panel. ■

Safety notes on the frontal airbag system

If you use airbags correctly, they can considerably reduce the risk of injury in many kinds of accident.

WARNING

- **It is important for the driver and front passenger to keep a distance of at least 25 cm from the steering wheel or dash panel. If the minimum distance is not observed then the airbags do not correctly protect the vehicle occupants; risk of fatal injuries! In addition, the front seats and head restraints must always be positioned correctly for the height of the occupant.**
- **If you are not wearing a seat belt, if you lean forward or to the side while travelling or assume an incorrect sitting position, there is a substantially increased risk of injury. This increased risk of injury will be further increased if you are struck by an inflating airbag.**
- **Never let a child travel on the front seat without an appropriate restraint system. If the airbag is triggered in an accident, children can sustain serious or fatal injuries from the airbag as it inflates ⇒ page 46, "Child safety".**
- **The deployment space between the front passengers and the airbags must not in any case be occupied by other passenger, pets and objects.**
- **The airbags provide protection for just one accident; replace them once they have deployed.**
- **It is also important not to attach any objects such as cup holders or telephone mountings to the surfaces covering the airbag units.**
- **Do not attempt to modify components of the airbag system in any way.** ■

Knee airbag*

Description of the knee airbag

The airbag system provides additional protection to front seat passengers if they are properly secured.

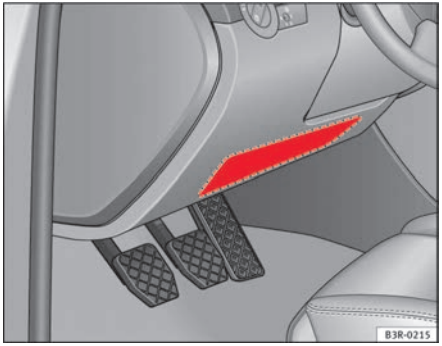

Fig. 21 Driver's knee airbag

The knee airbag for the driver is located in the instrument panel underneath the steering wheel ⇒ fig. 21.

The knee airbag offers additional protection to the driver's knees and upper and lower thigh areas as a supplement to the safety belts.

If the front airbags deploy, the knee airbag also deploys in severe frontal collisions ⇒ page 32.

Besides their normal safety function, safety belts help keep the driver in position in case of a frontal collision so that the airbags can provide protection.

The airbag system is not a substitute for seat belts. It is, on the other hand, part of the overall occupant safety system of your vehicle. Always remember ▶

that the airbag system can only help to protect you if you are wearing your safety belt and wearing it properly.

Remember too that airbags will deploy only once and only in certain kinds of accidents - your safety belts are always there to offer protection in those accidents in which airbags are not supposed to deploy or when they have already deployed, for example when your vehicle strikes or is struck by another after the first collision.

This is just one of the reasons why an airbag is not a substitute for the safety belt. The airbag system works most effectively when used with the safety belts. Therefore, always wear your safety belts correctly.

It is important to remember that while the supplemental airbag system is designed to reduce the likelihood of serious injuries, other injuries, for example, swelling, bruising, and minor abrasions can also be associated with airbags.

The knee airbag system basically consists of:

- The electronic control module
- One inflatable airbag (airbag and gas generator) for the driver
- An airbag indicator light in the instrument panel

The knee airbag system will not deploy:

- when the ignition is turned off
- in frontal collisions when the deceleration measured by the control unit is too low
- in side collisions
- in rear-end collisions
- in rollovers
- in the event of a system malfunction (warning/indicator light illuminated) ⇒ page 65.

WARNING

- **Safety belts and the airbag system can only provide protection when occupants are in the proper seating position.**
- **If the airbag indicator light comes on when the vehicle is being used, have the system inspected immediately by your Authorised Service Centre. The airbag may not work properly when the vehicle acceleration in a side collision is high enough to deploy the airbag. See also ⇒ page 65.** ■

How knee airbags work

The risk of injury to the leg area is reduced by fully deployed knee airbags.

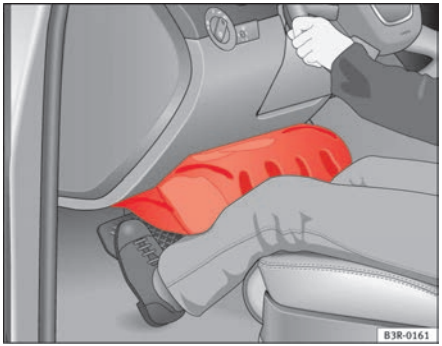

Fig. 22 Inflated airbags protect in a frontal collision.

The knee airbag system has been designed so that the airbag for the driver is deployed in certain but not all frontal collisions.

If the front airbag deploys, the knee airbag also deploys in severe frontal collisions.

When the system is deployed, the airbag starts to fill with a propellant gas, and inflates between the lower part of the instrument panel and the driver ⇒ page 35, fig. 22.

Although they are not a soft pillow, they can “cushion” the impact and in this way they can help to reduce the risk of injury to the lower extremities.

All this takes place instantaneously, so fast that many people do not even realize that the airbags have deployed. The airbags also inflate with a great deal of force and it is important for occupant safety that nothing should be in their way when they deploy.

Fully inflated airbags in combination with properly worn safety belts slow down and limit the occupant's forward movement and help to reduce risk. ■

Important safety notes on the knee airbag system

Airbags are only supplemental restraints.

Always wear safety belts correctly and drive in a proper seated position. There is a lot that you and your passengers must know and do to help the safety belts and airbags to provide supplementary protection.

⚠ WARNING

An inflating knee airbag can cause serious injury. Wearing safety belts incorrectly and improper seating positions increase the risk of serious personal injury and death whenever a vehicle is being used.

- **The airbag system cannot protect you properly if you are seated too close to any of the airbag locations. When adjusting their seating positions, it is important for drivers to keep their upper bodies and knees to the following minimum safe distances:**

⚠ WARNING (continued)

  - **25 cm between the chest and the steering wheel/instrument panel.**
  - **10 cm between the knees and the lower part of the instrument panel.**

- **The risk of personal injury increases if you lean forward or to the side, or if the seat is improperly positioned and you are not wearing your safety belt. The risk increases even more should the airbag deploy.**
- **Always make sure that the knee airbag can inflate without interference. Objects between yourself and the airbag can increase the risk of injury in an accident by interfering with the way the airbag deploys or by being thrust into you as the airbag deploys.**
  - **No objects of any kind should be carried in the footwell area in front of the driver's seat. Bulky objects (shopping bags, for example) can hinder or prevent proper deployment of the airbag. Small objects can be thrown through the vehicle if the airbag deploys and injure you or your passengers.**
- **Make sure there are no cracks, deep scratches or other damage in the area of the instrument panel where the knee airbag is located.**
- **If children are incorrectly seated, their risk of injury increases in the case of an accident ⇒ page 46.** ■

Side airbags*

Description of side airbags

The airbag system is not a substitute for the seat belts.

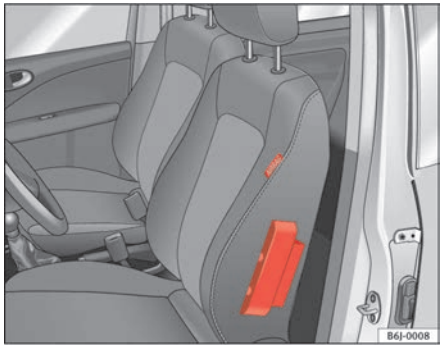

Fig. 23 Side airbag in driver seat

The front side airbags are located in the driver's seat and front passenger's seat backrests ⇒ fig. 23. The rear side airbags are located in the rear wheel housing lining. The locations are identified by the text “AIRBAG” in the upper region of the backrests and in the rear wheel housing lining.

Together with the seat belts, the side airbag system gives the front seat occupants additional protection for the upper body in the event of a severe side collision ⇒ page 40, “Safety notes on the operation of the side airbag system”.

In a side collision, the side airbags reduce the risk of injury to passengers on the front seats to the areas of the body facing the impact. In addition to their normal function of protecting the occupants in a collision, the seat belts also hold the passengers in the front seats and the outer rear seats in a position where the side airbags can provide maximum protection.

The airbag system is not a substitute for seat belts, but it is an integral part of the vehicle's overall passive safety system. Please bear in mind that the airbag system can only work effectively when the occupants are wearing their seat belts. Therefore, it is most important to wear the seat belts at all times, not only because this is required by law in most countries, but also for your safety ⇒ page 18, “Brief introduction”.

The side airbag system will not be triggered if:

- the ignition is switched off,
- there is a minor side collision,
- there is a frontal collision,
- there is a rear-end collision,
- the vehicle turns over.

The main parts of the airbag system are:

- an electronic control and monitoring system (control unit),
- The front side airbags in the backrests of the front seats and the rear side airbags in the lining of the rear wheel housing.
- a warning lamp in the dash panel insert ⇒ page 29.

The airbag system operation is monitored electronically. The airbag warning lamp will light up for approx. 4 seconds every time the ignition is switched on (self-diagnosis).

WARNING

- **In a side-on collision, the side airbags will not work, if the sensors do not correctly measure the pressure increase on the interior of the doors, due to air escaping through the areas with holes or openings in the door panel.**
- **Never drive the vehicle if the interior panels have been removed.**

WARNING (continued)

- **Never drive if the interior door panels have been removed or if the panels have not been correctly fitted.**
- **Never drive the vehicle if the loudspeakers in the door panels have been removed, unless the holes left by the loudspeakers have been correctly closed.**
- **Always check that the openings are closed or covered if loudspeakers or other equipment are fitted in the interior door panels.**
- **Any work carried out to the doors should be made in a qualified authorised workshop.**
- **The seat belts and airbags can only provide maximum protection if the occupants are seated correctly ⇒ page 10, "Proper sitting position for occupants".**
- **If a fault has occured in the airbag system, have the system checked immediately by a qualified workshop. Otherwise, during a side collision, the system may fail to trigger, or not trigger correctly.** ■

Function of side airbags

Inflated airbags can reduce the risk of head or chest injury in many side impact collisions.

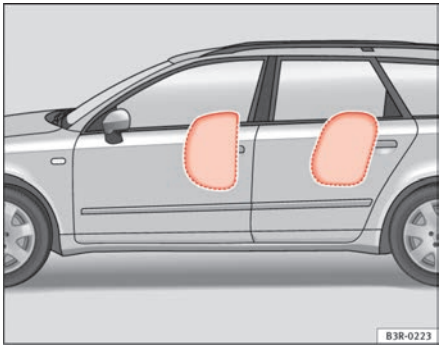

Fig. 24 Inflated side airbag on left side of vehicle

In some **side collisions**, the side airbag is triggered on the impact side of the vehicle ⇒ fig. 24.

In certain types of accident the front, curtain and side airbags may be triggered together.

When the system is triggered, the airbag is filled with propellant gas.

In order to provide the desired extra protection in an accident, the airbags have to deploy extremely rapidly (within thousandth of a second). A fine dust may develop when the airbag deploys. This is normal and it is not an indication of fire in the vehicle.

The fully deployed airbags cushion the movement of the occupants of the front seats and the outer rear seats and help to reduce the risk of injury to the upper body. ▶

The special design of the airbag allows the controlled escape of the propellant gas when an occupant puts pressure on the bag. Thus, the head and chest are surrounded and protected by the airbag. ■

Safety notes on the operation of the side airbag system

If airbags are used correctly, they can considerably reduce the risk of injury in side impact collisions.

WARNING

- If you do not wear a seat belt, if you lean forward, or are not seated correctly while the vehicle is in motion, you are at a greater risk of injury if the side airbag system is triggered in an accident.
- In order for the side airbags to provide their maximum protection, the prescribed sitting position must always be maintained with seat belts fastened while travelling.
- Occupants of the outer seats must never carry any objects or pets in the deployment space between them and the airbags, or allow children or other passengers to travel in this position. It is also important not to attach any accessories (such as cup holders) to the doors. This would impair the protection offered by the side airbags.
- The built-in coat hooks should be used only for lightweight clothing. Do not leave any heavy or sharp-edged objects in the pockets.
- Great forces, such as hard blows or kicks, must not be exerted upon the backrest bolster because the system may be damaged. In this case, the side airbags would not be triggered.
- Under no circumstances should protective covers be fitted over the driver seat or front passenger seat unless the covers have been expressly approved for use in your vehicle. Because the airbag is triggered from the side of the backrest, the use of non-approved seat covers would obstruct the side airbag, seriously reducing the airbag's effectiveness ⇒ page 214, “Accessories, parts replacement and modifications”.
- Any damage to the original seat upholstery or around the seams of the side airbag units must be repaired immediately by a qualified workshop.
- The airbags provide protection for just one accident; replace them once they have deployed.

WARNING (continued)

- When children assume an incorrect sitting position, they expose themselves to an increased risk of injury in the event of an accident. This is particularly the case if the child is travelling on the front passenger seat and the airbag system is triggered in an accident; this could have critical consequences including serious injury or death ⇒ page 46, “Child safety”.
- Any work on the side airbag system or removal and installation of the airbag components for other repairs (such as removal of the front seat) should only be performed by a qualified workshop. Otherwise, faults may occur during the airbag system operation.
- Do not attempt to modify components of the airbag system in any way.
- The side and head airbags are managed through sensors located in the interior of the front doors. To ensure the correct functioning of the side and head airbags neither the doors nor the door panels should be modified in any way (e.g. fitting loudspeakers). If the front door is damaged, the airbag system may not work correctly. All work carried out on the front door must be made in a qualified workshop. ■

Curtain airbags

Description of curtain airbags

The airbag system is not a substitute for the seat belts.

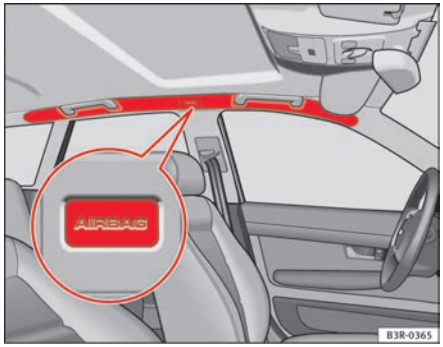

Fig. 25 Location of left curtain airbag

The curtain airbags are located on both sides in the interior above the doors ⇒ fig. 25 and are identified with the text “AIRBAG”.

In conjunction with the seat belts, the curtain airbag system gives the occupants additional protection for the head and upper body in the event of a severe side collision ⇒ page 42, “Safety notes on the operation of the curtain airbag system”.

The airbag system is not a substitute for seat belts, but it is an integral part of the vehicle's overall passive safety system. Please bear in mind that the airbag system can only work effectively when the occupants are wearing their seat belts correctly and have adjusted the head restraints properly. Therefore, it is most important to wear the seat belts at all times, not only because this is required by law in most countries, but also for your safety ⇒ page 18, “Brief introduction”.

The main parts of the curtain airbag system are:

- an electronic control and monitoring system (control unit),
- the curtain airbags (airbags with gas generator) for the driver, front passenger and passengers on the rear seats,
- a warning lamp in the dash panel insert ⇒ page 29.

The airbag system operation is monitored electronically.

The curtain airbag system will not be triggered

- the ignition is switched off,
- there is a frontal collision,
- there is a rear-end collision,
- if the vehicle rolls,
- during a minor side collision,

WARNING

If a fault has occured in the airbag system, have the system checked immediately by a qualified workshop. Otherwise there is a danger that during a collision, the system may fail to trigger, or not trigger correctly. ■

Function of curtain airbags

Fully inflated airbags reduce the risk of head or chest injury in a side collision.

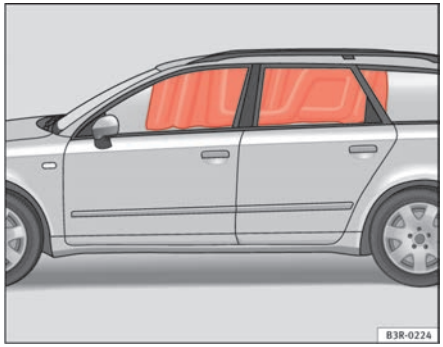

Fig. 26 Deployed curtain airbags

During some **side collisions** the curtain airbag is triggered on the impact side of the vehicle ⇒ fig. 26.

In certain types of accident the front, side and curtain airbags may be triggered together.

When the system is triggered, the airbag is filled with propellant gas. In the process, the curtain bag covers the side windows and door pillars.

In order to provide the desired extra protection in an accident, the airbags have to deploy extremely rapidly (within thousandth of a second). A fine dust may develop when the airbag deploys. This is normal and it is not an indication of fire in the vehicle.

The fully deployed airbags cushion the movement of the front occupants and help to reduce the risk of injury to the upper body.

The special design of the airbag allows the controlled escape of the propellant gas when an occupant puts pressure on the bag. Thus, the head and chest are surrounded and protected by the airbag. ■

Safety notes on the operation of the curtain airbag system

If you use airbags correctly, they can considerably reduce the risk of injury in many kinds of accident.

WARNING

- **In order for the side airbags to provide their maximum protection, the prescribed sitting position must always be maintained with seat belts fastened while travelling.**
- **For safety reasons, the head air bag must be disconnected in those vehicles fitted with a passenger compartment separation screen. See an Authorised Service Centre to make this adjustment.**
- **There must be no other persons, animals or objects between the occupants of the outer seats and the deployment space of the curtain airbags so that the curtain airbag can deploy without restriction and provide the greatest possible protection. Therefore, sun blinds which have not been expressly approved for use in your vehicle may not be attached to the side windows ⇒ page 214, “Accessories, parts replacement and modifications”.**
- **The built-in coat hooks should be used only for lightweight clothing. Do not leave any heavy or sharp-edged objects in the pockets. Please, do not hang the clothes on coat hangers.**
- **The airbags provide protection for just one accident; replace them once they have deployed.**
- **Any work on the curtain airbag system or removal and installation of the airbag components for other repairs (such as removal of the roof lining)** ▶

WARNING (continued)

should only be performed by a qualified workshop. Otherwise, faults may occur during the airbag system operation.

- **Do not attempt to modify components of the airbag system in any way.**
- **The side and head airbags are managed through sensors located in the interior of the front doors. To ensure the correct functioning of the side and head airbags neither the doors nor the door panels should be modified in any way (e.g. fitting loudspeakers). If the front door is damaged, the airbag system may not work correctly. All work carried out on the front door must be made in a qualified workshop.** ■

Deactivating airbags*

Disabling front passenger airbag

If you fit a rear-facing child seat to the front passenger seat, the front passenger airbag must be de-activated.

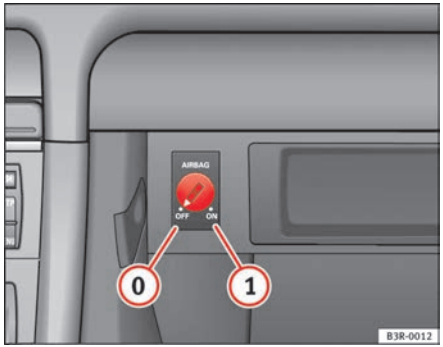

Fig. 27 In the glovebox: key for enabling and disabling front passenger airbag

Fig. 28 Warning lamp for deactivated passenger airbag in centre console

When the passenger airbag is **deactivated**, this means that only the frontal airbag is deactivated. All the other airbags in the vehicle remain functional.

Disabling front passenger airbag

– Switch the ignition on.

– Turn the ignition switch in the key-operated switch in the glove compartment to position (0) **OFF** ⇒ fig. 27.

– Check that the warning lamp “OFF” on the instrument panel ⇒ fig. 28 remains lit when the ignition is switched on ⇒ ⚠.

Enabling front passenger airbag

– Switch the ignition on.

– Turn the ignition switch in the key-operated switch in the glove compartment to position (1) **ON** ⇒ fig. 27. ▶

– Check that the warning lamp on the instrument panel does ⇒ page 44, fig. 28 *not* light up when the ignition is switched on ⇒ ⚠.

⚠ WARNING

- **The driver is responsible for the proper position of the key-operated switch.**
- **You should only deactivate the front passenger airbag when, in exceptional cases, you have to use a rear-facing child seat ⇒ page 46, "Child safety"**
- **Never install a child seat facing backwards (or rear-facing) on the front passenger seat unless the front passenger airbag has been disabled. This represents a risk of fatal injuries to the child! However, if it is necessary in exceptional circumstances to transport a child in a rear-facing child seat on the front passenger seat, you must always disable the front passenger airbag.**
- **As soon as the child seat is no longer needed on the front passenger seat, enable the front passenger airbag again.**
- **Only deactivate the passenger airbag when the ignition is off, otherwise a fault may occur in the airbag system, this will create a danger that in case of an accident, the airbag does not deploy properly or does not deploy at all.**
- **When the passenger airbag is deactivated, if the warning lamp AIRBAG OFF is not continuously lit up when the front passenger airbag is disabled, there may be a fault in the airbag system:**
  - **Have the airbag system inspected immediately by a qualified workshop.**
  - **Do not use a child seat on the front passenger seat! The front passenger airbag could be triggered despite the fact that there is a fault in the system and, as a result, a child could sustain serious or fatal injuries.**

⚠ WARNING (continued)

  - **It is predictable whether the front passenger airbag will deploy during an accident! Warn all your passengers of this.**
- **When using the ignition key to activate / deactivate the passenger front airbag, only the passenger front airbag will be activated / deactivated. The side airbag and head airbag on the passenger side will remain active.** ■

Child safety

Brief introduction

Introduction

Statistics show that children are generally safer on the rear seat than on the front passenger seat.

We recommend that children under 12 years of age are transported on the rear seats. Children travelling on the rear seat must use a child restraint system or the seat belts provided, depending on their age, height and weight. It is advisable that children always travel in the rear seats, the rear central position being the safest seat, since the risk of injuries in a side collision is diminished.

The physical laws involved and the forces acting in a collision apply also to children. ⇒ page 19, “Why wear seat belts?”. But unlike adults, children do not have muscle and bone structures fully developed. This means that children are subject to a greater risk of injury.

To reduce this risk, children must always use special child restraint systems when travelling in the vehicle.

We recommend the use of child safety products from the SEAT Genuine Accessories Program, which includes systems for all ages made by “Peke”[1].

These systems have been especially designed and approved, complying with the ECE-R44. regulation.

Follow the manufacturer's instructions and observe any statutory requirements when installing and using child seats. Always read and note ⇒ page 46, “Safety notes on using child seats”.

[1] Not for all countries

We recommend you to include together with the on-board documentation, the manufacturer's Child Seat instructions manual. ■

Safety notes on using child seats

Proper use of child seats substantially reduces the risk of injury in an accident!

As the driver, you are responsible for any children you transport in your vehicle.

– Protect your children by properly using appropriate child seats ⇒ page 48.

– Always ensure that the belt webbing is properly positioned according to the instructions provided by the manufacturer of the child seat.

– When travelling, do not allow children to distract you from traffic.

– Take breaks regularly during long trips. Take a break at least every two hours.

WARNING

- **Never install a child seat facing backwards (or rear-facing) on the front passenger seat unless the front passenger airbag has been disabled. This could lead to a risk of potentially fatal injuries to the child! However, if it is necessary, in exceptional cases, to transport a child in the front passenger seat, the front passenger airbag must always be disabled ⇒ page 44,**

⚠ WARNING (continued)

"Deactivating airbags*". If the passenger seat has a height adjustment option, move it to the highest position.

- For those vehicles that do not include a key lock switch to turn the airbag off, an Authorised Service Centre must be consulted.
- All passengers, especially children, must assume the proper sitting position and be properly belted in while travelling.
- Never hold children or babies on your lap, this can result in potentially fatal injuries to the child!
- Never allow a child to be transported in a vehicle without being properly secured, or to stand up or kneel on a seat while travelling. In an accident, the child could be flung through the vehicle, causing possibly fatal injuries to themselves and to the other passengers.
- If children assume an improper sitting position when the car is moving, they expose themselves to greater risk of injury in the event of sudden braking manoeuvre or in an accident. This is particularly important if the child is travelling on the front passenger seat and the airbag system is triggered in an accident; as this could cause serious injury or even death.
- A suitable child seat can protect your child!
- Never leave an unsupervised child alone on a child seat or in the vehicle.
- Depending on weather conditions, it may become extremely hot or cold inside the vehicle. This can be fatal.
- Children who are less than 1.5 metres tall must not wear a normal seat belt without a child restraint system, as this could cause injuries to the abdominal and neck areas during a sudden braking manoeuvre or in an accident.
- Do not allow the belt webbing to become twisted or jammed, or to rub on any sharp edges.
- Incorrectly worn seat belts can cause injuries even in a minor collision or in sudden braking manoeuvres.

⚠ WARNING (continued)

- The seat belt provides maximum protection only when the belt web is properly positioned ⇒ page 22, "Seat belts".
- Only one child may occupy a child seat ⇒ page 48, "Child seats". ■

Child seats

Categorisation of child seats into groups

Use only child seats that are officially approved and suitable for the child.

Child seats are subject to the regulation ECE-R 44. ECE-R. It means that: Economic Commission for Europe Regulation

The child seats are grouped into 5 categories:

Group 0: Children up to 10 kg

Group 0+: Children up to 13 kg

Group 1: from 9 to 18 kg

Group 2: from 15 to 25 kg

Group 3: from 22 to 36 kg

Child seats that have been tested and approved under the ECE R 44 standard bear the test mark on the seat (the letter E in a circle with the test number below it). ■

Group 0 and 0+ child seats

A suitable child seat and a correctly adjusted seat belt can help you to protect your child.

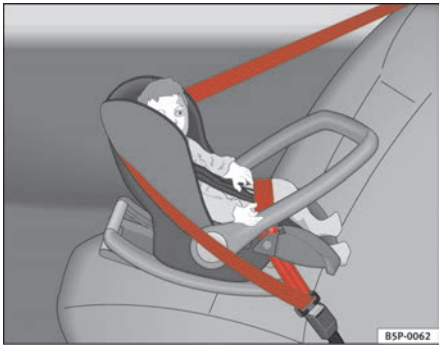

Fig. 29 A group 0 rear-facing child seat fitted on the rear seat.

Group 0: For babies from about 9 months old and 10 kg in weight the most suitable seats are those appearing in the illustration ⇒ fig. 29.

Group 0+: For babies from about 18 months old and 13 kg in weight the most suitable seats are those appearing in the illustration.

Follow the manufacturer's instructions and observe any statutory requirements when installing and using child seats.

We recommend you to include together with the on-board documentation, the manufacturer's Child Seat instructions manual.

WARNING

Read and always observe information and warnings concerning the use of child seats ⇒ ⚠ in “Safety notes on using child seats” on page 46. ■

Group 1 child seats

A suitable child seat and a correctly adjusted seat belt can help you to protect your child.

Fig. 30 A category 1 forward-facing child seat fitted on the rear seat.

Child seats using the "ISOFIX" system or seats in which the child faces the rear of the car are most appropriate for babies and small children weighing between 9 and 18 kg.

Follow the manufacturer's instructions and observe any statutory requirements when installing and using child seats.

We recommend you to include together with the on-board documentation, the manufacturer's Child Seat instructions manual.

⚠ WARNING

Read and always observe information and warnings concerning the use of child seats ⇒ ⚠ in "Safety notes on using child seats" on page 46. ■

Group 2 and 3 child seats

A suitable child seat and a correctly adjusted seat belt can help you to protect your child.

Fig. 31 Forward-facing child seat installed on rear seat.

Follow the manufacturer's instructions and observe any statutory requirements when installing and using child seats.

We recommend you to include together with the on-board documentation, the manufacturer's Child Seat instructions manual.

Group 2 child seats

Children *under* 7 years of age weighing between 15 and 25 kg are best protected by group 2 child seats together with properly adjusted seat belts.

Group 3 child seats

Children *over* 7 years of age weighing between 22 and 36 kg but less than 1.5 metres tall are best protected by seat cushions with head restraints together with properly worn seat belts ⇒ fig. 31.

WARNING

- **The shoulder part of the seat belt must lie approximately on the centre of the shoulder, never across the neck or the arm. The seat belt must lie close to the upper part of the body. The lap belt part must lie across the pelvis, not across the stomach, and always fit closely. Pull the belt tight if necessary to take up any slack ⇒ page 22, “Seat belts”.**
- **Read and always observe information and warnings concerning the use of child seats ⇒ ⚠ in “Safety notes on using child seats” on page 46.** ■

Securing child seats

Ways to secure a child seat

A child seat can be secured differently on the rear seat and on the front passenger seat.

You can secure a child seat to the rear seat or front passenger seat in the following ways:

- Child seats in groups **0 to 3** can be secured with a seat belt.
- Seats for children aged **0, 0+ and 1** with the "ISOFIX" system can be secured without fastening seat belts, using the "ISOFIX" and/or Top Tether securing rings ⇒ page 52.

Category	Weight	Seat locations		
		Front passenger	Rear outer	Rear centre
Group 0	‹10 kg	U*	U/L	U
Group 0+	‹13 kg	U*	U/L	U
Group 1	9-18 kg	U*	U/L	U
Group 2 / 3	15-36 kg	U*	U	U

U: Suitable for universal approved restraining systems for use in this age category (universal retention systems are those fitted using the adult seat belt).

*: Move the passenger seat as far to rear as possible, as high as possible and always deactivate the airbag.

L: Suitable for retention systems using the "ISOFIX" anchors.

WARNING

- **When travelling, children must be secured in the vehicle with a restraint system suitable for age, weight and size.**
- **Never install a child seat facing backwards (or rear-facing) on the front passenger seat unless the front passenger airbag has been disabled. This could cause fatal injuries to the child! However, if it is necessary, in exceptional cases, to transport a child in the front passenger seat, the front passenger airbag must always be disabled ⇒ page 44, "Deactivating airbags*" and move the seat to its highest position, in case it has this adjustment.**
- **Read and always observe information and warnings concerning the use of child seats ⇒ ⚠ in "Safety notes on using child seats" on page 46.** ■

Child seat mounting using the “ISOFIX” and/or Top Tether system

The Child restraint systems may be fitted to the rear seat quickly and safely with the “ISOFIX” and/or Top Tether system (fitted to the rear seatback). The passenger seat is not equipped with Top Tether and so only the “ISOFIX” system can be used.*

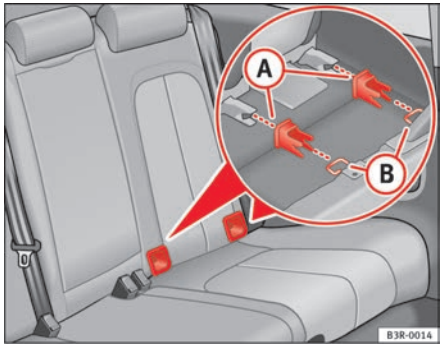

Fig. 32 Position of the ISOFIX anchorages on the side rear seat

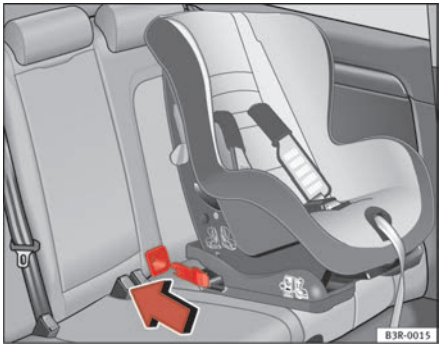

Fig. 33 The ISOFIX child seat anchorings slide along the fitted plastic guides until secured in the vehicle's ISOFIX anchorages

Following the instructions given by the child seat manufacturer when installing and removing the seat.

– Fit the plastic guides on the vehicle's ISOFIX anchorages between the backrest and the seat ⇒ fig. 32.

– Slide the child seat anchorages along the plastic guides until secured in the car's ISOFIX rings (when correctly closed, you will hear a “click” and the seat should also have a visual indicator to confirm it is correctly secured) ⇒ fig. 33.

– Check that the ISOFIX system is correctly secured by pulling on the child seat.

Detailed fitting instructions are supplied with the child safety seat.

Child seats with “ISOFIX” mountings are available from Dealers and specialist retailers.

WARNING

The retainers employed for this child safety seat are specially designed for the “ISOFIX” system. Never secure other child seats, seat belts or other items into the retainers. If you do, you increase the risk of sustaining severe or fatal injuries. ■

Top Tether retainer straps

Some child restraint seats have a third Top Tether anchoring point, apart from both “ISOFIX” anchoring points, which allow better child retention.

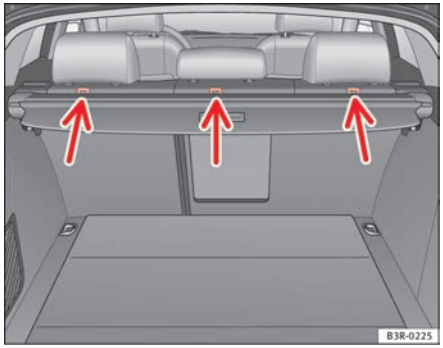

Fig. 34 Position of the three Top Tether rings on the rear tray

The Top Tether system has an upper strap for attachment to the vehicle's upper anchoring point, which is found on the rear luggage compartment cover.

The retainer strap is used to reduce forwards movements of the safety seat in a crash, helping reduce the risk of injuries to the head from hitting the inside of the vehicle.

It is foreseen that an EU Directive will introduce requirements related to the retention of child restraint systems by means of ISOFIX and Top Tether anchorages (probably compulsory for new types from 2010), which will entail improved retention of the child restraint seat and less head movement in case of frontal collisions.

Use of retainer straps on rear-facing seats

At present there are very few rear-facing child safety seats fitted with a retainer strap. Please carefully read and follow the safety seat manufacturer's instructions for information on how to install the retainer strap properly.

WARNING

An undue installation of the safety seat will increase the risk of injury in the event of a crash.

- **Never tie the retainer strap to a hook in the luggage compartment.**
- **Never secure or tie luggage or other items to the lower anchorages (ISOFIX) or the upper ones (Top Tether).** ■

Fitting the Top Tether child restraint to the anchoring point

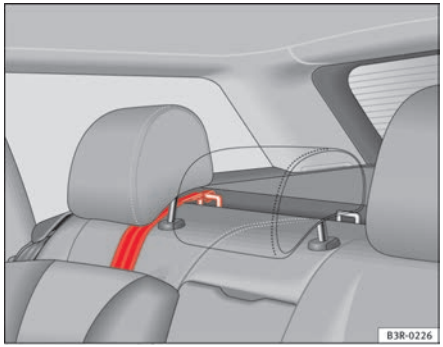

Fig. 35 Retainer strap: correct adjustment and fitting

Securing the Top Tether child restraint to the anchoring point situated on the vehicle luggage compartment cover

– Pull out the fastening belt of the child restraint seat according to the manufacturer's instructions.

– Lead the Top Tether fastening belt under the rear seat head restraint ⇒ fig. 35 (lift the head restraint where necessary).

– Slide the belt so that the Top Tether belt of the child restraint seat is correctly secured to the luggage compartment cover anchorage.

– Firmly tighten the Top Tether belt following the child restraint seat manufacturer's instructions.

Releasing the retaining strap

– Release the retainer strap in line with the instructions given by the child safety seat manufacturer.

– Push the lock and release it from the anchoring support.

WARNING

Read and bear in mind all the WARNINGS ⇒ page 53. ■

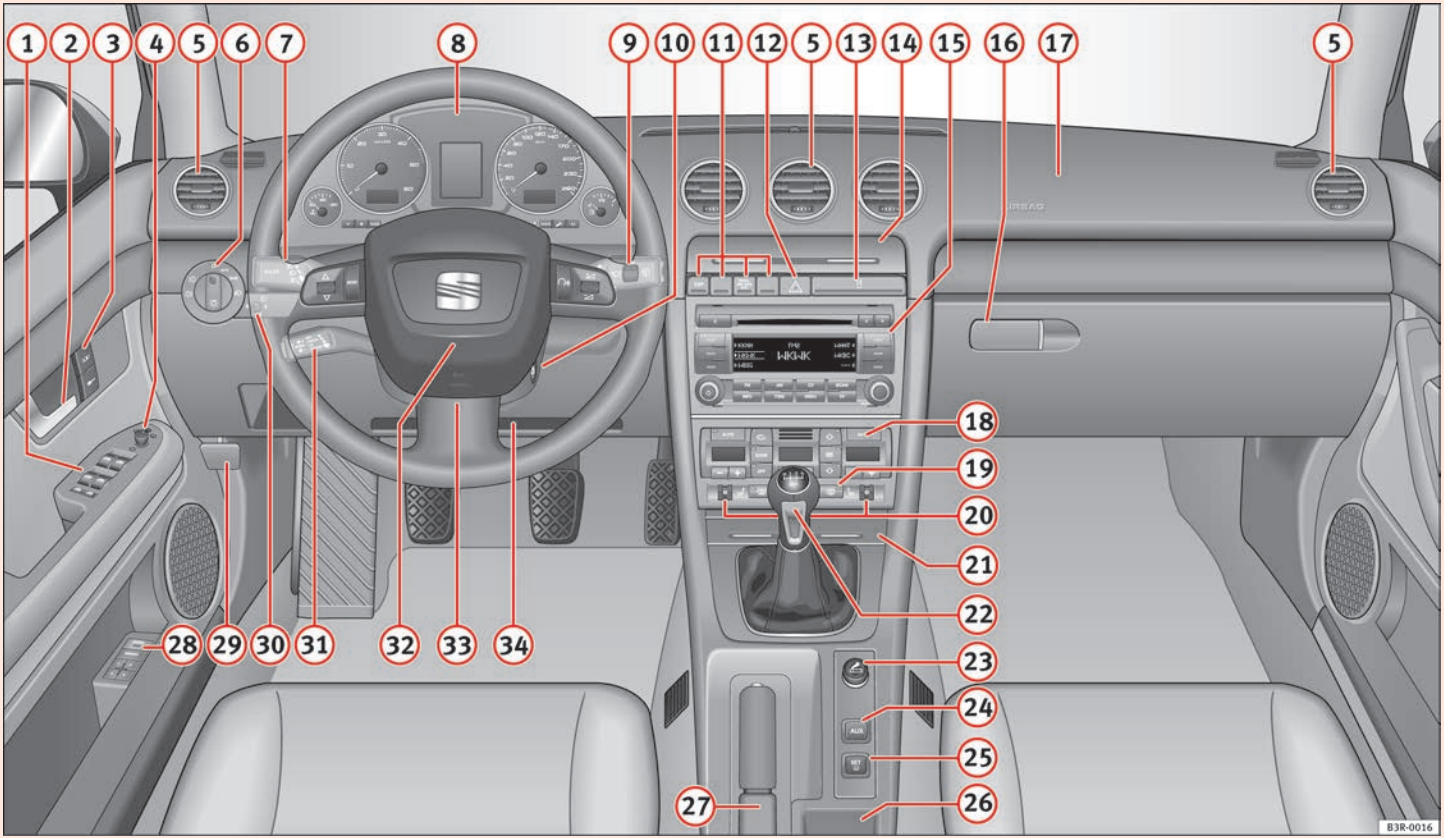

Fig. 36 Some of the equipment listed in this section is only fitted on certain models or are optional extras.

Operating instructions

Cockpit

Overview

Instrument panel overview

1. Electric windows 110
2. Door handle
3. Central locking switch 101
4. Electric adjuster for exterior mirrors 132
5. Air outlets with thumbwheel 167
6. Light switch 116
7. Lever for indicators and main beam headlights 123
8. Instrument panel 59
9. Levers and switches for:
   - Windscreen wipers and washer 128
   - On-board computer 85
   - Menu display 87
10. Ignition lock 171
11. Depending on equipment fitted:
    - Electronic stabilisation programme (ESP) 68
    - Warning lamp indicating that front passenger's airbag has been disabled 44
    - Switch for acoustic parking aid 175
12. Hazard warning lights 122
13. Drink holder 153
14. Stowage compartments
15. Depending on equipment fitted: Sound system or navigation system
16. Lockable glove compartment 157
17. Front passenger's airbag 31
18. Climate control 162
19. Switch for heated rear window 127
20. Thumbwheel for seat heating 169
21. Ashtray 154
22. Manual gear lever
23. Cigarette lighter / Socket 154
24. Auxiliary socket
25. Tyre pressure monitoring 66
26. Stowage compartment
27. Handbrake 174
28. Seat memory* 138
29. Bonnet lock release 220
30. Headlight range control 120
    - coming home and leaving home: delayed lights off and anticipated lights on function 119
31. Lever for cruise control 178
32. Steering wheel with:
    - Horn
    - Driver's airbag 31
    - Controls for radio and telephone*

(33) Adjustable steering column 170
(34) Vehicle wallet compartment / knee airbag* 31

Note

- Separate operating instructions are enclosed if the vehicle is equipped with a factory-fitted radio or navigation system.
- The arrangement of switches and controls on right-hand drive models* may be slightly different from the layout shown in ⇒ page 56, fig. 36. However, the symbols used to identify the controls are the same. ■

Instruments

Instrument panel overview

The instrument panel is the driver's information centre.

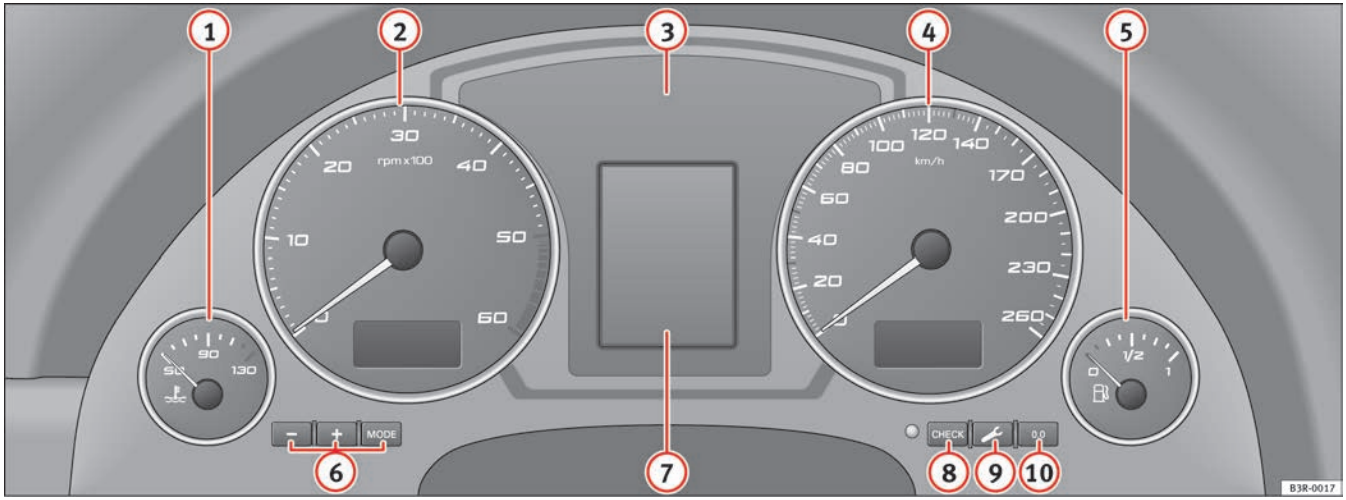

Fig. 37 Overview of instrument panel

1. Coolant temperature gauge 60
2. Rev counter incorporating digital clock and date 61, 61
3. Warning and indicator lamps 65
4. Speedometer (incorporating mileage recorder display) 63
5. Fuel gauge 63
6. Adjuster buttons for
   - Digital clock and date 61
   - Instrument lighting 62
7. Digital display with
   - Service indicator ..... 74 ▶

– Driver information system 71
(8) CHECK button 64
(9) Call-up button for service indicator 74
(10) Reset button for trip recorder . . . . . 63 ■

Coolant temperature gauge

Fig. 38 Engine coolant temperature gauge

The coolant temperature gauge ⇒ fig. 38 only works when the ignition is switched on. In order to avoid engine damage, please read the following notes for the different temperature ranges.

Cold temperature (A)

If the needle is still on the left of the dial, this indicates that the engine has not yet reached operating temperature. Avoid high revs and heavy acceleration and do not make the engine work hard.

Normal temperature (B)

In normal operations, the needle will settle somewhere in the centre of the dial once the engine has reached running temperature. The temperature may also rise when the engine is working hard, especially at high outside temperatures. This is no cause for concern, provided the warning lamp does not light up in the instrument panel.

Warning temperature (C)

If the symbol flashes in the display, this means that either the coolant *temperature* is too high or the coolant *level* is too low ⇒ page 78.

WARNING

- **Before opening the bonnet and checking the coolant level, observe the warning information ⇒ page 221.**
- **Never open the bonnet when steam or coolant is being released from it. This could lead to burns. Wait until you can no longer see or hear escaping steam or coolant.**

Caution

Accessories in front of the air inlet reduce the cooling effect of the coolant. At high outside temperatures and high engine loads, there is a risk of the engine overheating. ■

Rev counter

The rev counter indicates the number of engine revolutions per minute.

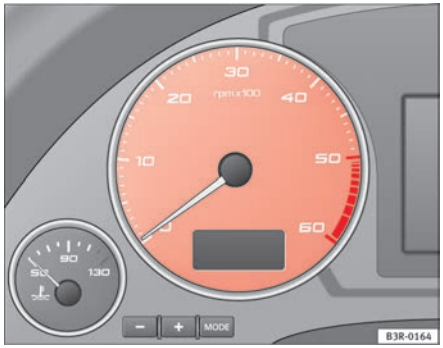

Fig. 39 Detailed view of the instrument panel: Rev. counter

You should select a lower gear if the engine speed drops below 1500 rpm. The start of the red zone on the dial indicates the maximum engine speed which may be used when the engine is warm and after it has been run in properly. However, it is advisable to change up a gear or lift your foot off the accelerator before the needle reaches the red zone.

Caution

The rev. counter needle ⇒ fig. 39 must only reach the red zone for a short period, otherwise the engine could be damaged. The start of the red zone on the dial is different for some engine versions.

For the sake of the environment

Changing up a gear early will help you to save fuel and minimise engine noise. ■

Digital clock and date

Your vehicle is equipped with a quartz clock.

Fig. 40 Detail of the instrument cluster: Digital clock

The **time** and **date** are set using the (+) and (-) buttons.

Setting the hour

– Press the (MODE) button. The hour display will start to flash.

– Use the (+) and (-) buttons to set the hour. ▶

Setting the minutes

– Keep pressing the MODE button until the minutes display flashes.

– Use the + and - buttons to set the minutes.

Setting the date

– Keep pressing the MODE button until the date display (day) flashes.

– Use the + and - buttons to set the day.

– Keep pressing the MODE button until the month display flashes.

– Use the + and - buttons to set the month.

– Keep pressing the MODE button until the year display flashes.

– Use the + and - buttons to set the year.

Disabling the date display

– Keep pressing the MODE button until the complete date display flashes.

– Use the - button to disable the date display.

Enabling the date display

– Keep pressing the MODE button until the complete date display flashes.

– Use the + button to enable the date display.

When the display stops flashing, this means the setting you are performing is completed and the time and date have been successfully stored.

When the ignition is switched off, the mileage recorder and the digital clock with date display can be switched on for a few seconds by pressing the CHECK button ⇒ page 59, fig. 37 (8). ■

Instrument lighting

The brightness of the instrument lighting can be adjusted as required.

Fig. 41 Instrument panel lighting

– Press the "+" button to increase the brightness of the instrument lighting.

– Press the "-" button to reduce the brightness of the instrument lighting.

The instrument lighting (dials and needles), the centre console illumination and the illumination of the displays are regulated by a light sensor incorporated in the instrument panel, depending on the outside light. ■

Speedometer with distance display

The speedometer indicates the speed of the vehicle and the distance travelled.

Fig. 42 Detailed view of the instrument panel: Distance display

The distance is normally stated in kilometres (km). On some models, however, the mileage recorder will show “miles”.

Lower distance display

The lower distance display records the vehicle's total mileage.

Upper distance display (trip recorder)

The upper distance display shows the distance that has been travelled since the trip recorder was last reset. It is used to measure short journeys. The last digit of the trip recorder indicates distances of 100 metres or tenths of a mile. The upper distance display can be reset to zero by pressing the reset button ⇒ fig. 42.

Fault display

If there is a fault in the instrument panel, the letters **DEF** will appear permanently in the trip recorder display. Please have the fault rectified as soon as possible.

Electronic immobiliser

The vehicle key data is consulted when the ignition is switched on.

If an uncoded key is used, the message **SAFE** will appear in the trip recorder display. The vehicle can no longer be started if that happens. ■

Fuel reserve

The display only works when the ignition is switched on.

When the needle reaches the reserve zone, the symbol lights up in the instrument cluster display ⇒ page 80. At this point there are still about 8 to 10 litres of fuel left in the tank. This is your reminder **to fill up soon**.

You can consult the fuel tank capacity of your vehicle in section ⇒ page 297, “Dimensions and capacities”.

Caution

Never run the tank completely dry. If there is an irregular fuel supply, misfiring can occur. This means that fuel could reach the exhaust system without burning. This may lead to the catalytic converter reheating and being damaged. ■

CHECK button

Fig. 43 Detailed view of the instrument panel: CHECK button

The CHECK button has the following functions:

Enabling the digital clock and the distance display

When the ignition is switched off, the distance display and the digital clock with date display can be enabled for a few seconds by pressing the CHECK button ⇒ fig. 43.

Starting check procedure (auto-check control)

The auto-check control ⇒ page 75 checks important components and vehicle systems. These background checks are run constantly, as long as the ignition is switched on.

You can start the "check procedure" manually by pressing the CHECK button with the ignition switched on. This function check can be started with the engine either stationary or running, but not at road speeds above 5 km/h.

Calling up driver messages

If a Priority 1 symbol flashes in the display ⇒ page 75, or if the bulb monitor detects a failure of one of the lights ⇒ page 81, the relevant driver information can be called up again by briefly pressing the CHECK button. For example:

Switch off engine, check oil level

The message will disappear from the display after about 5 seconds.

Speed warning

You can press the CHECK button to set speed limit warning 1 ⇒ page 83, "Setting speed limit warning 1" **while the vehicle is moving**. Speed limit warning 2* can only be set **when the ignition is switched off** ⇒ page 84, "Setting speed limit warning 2". ■

Warning and indicator lamps

General description

The warning and indicator lamps indicate a number of different functions and possible faults.

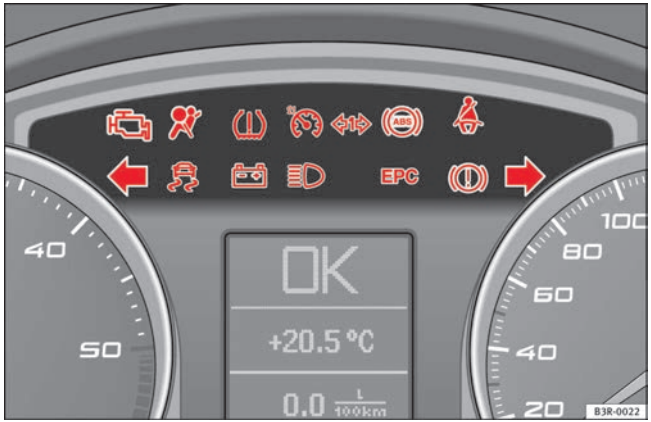

Fig. 44 Instrument panel with warning and indicator lamps

	Exhaust emission control system	⇒ page 66
	Airbag system	⇒ page 66
	Tyre pressure too low	⇒ page 66
	Cruise control	⇒ page 67
	Trailer indicators	⇒ page 67
	Anti-lock brake system (ABS)	⇒ page 67
	Seat belt warning	⇒ page 68
	Left indicators	⇒ page 68
	Electronic stabilisation programme (ESP)	⇒ page 68
	Alternator	⇒ page 69
	Main beam headlights	⇒ page 69
EPC	Engine management (alternative to)	⇒ page 69
	Glow plug system (alternative to EPC)	⇒ page 70
	Fault in brake system / handbrake is applied	⇒ page 70
	Right indicators	⇒ page 68

Note

A number of functions are monitored by the auto-check control ⇒ page 75. If a malfunction should occur, this will be shown by the display in the instrument cluster either with a red symbol (priority 1 - danger) or a yellow symbol (priority 2 - warning). ■

Exhaust emission control system

If the warning lamp **lights up continuously** you should take your vehicle to a specialist garage as soon as possible in order to have the fault rectified.

If the warning lamp **flashes** drive on at reduced speed and seek professional help in order to avoid damage to the catalytic converter.

For further information on the catalytic converter ⇒ page 190. ■

Airbag system

This warning lamp monitors the airbag and belt tension device system.

The warning lamp should light up for a few seconds when the ignition is switched on.

If the warning lamp does not go out, or if it lights up, flashes or flickers when the vehicle is moving, this indicates a malfunction in the system.

WARNING

If a malfunction should occur, have the system checked immediately by a specialist garage. Otherwise there is a risk that the airbag system and/or belt tensioners may not be triggered in an accident. ■

Tyre pressure monitoring display

The tyre pressure should be corrected as soon as possible if it is too low.

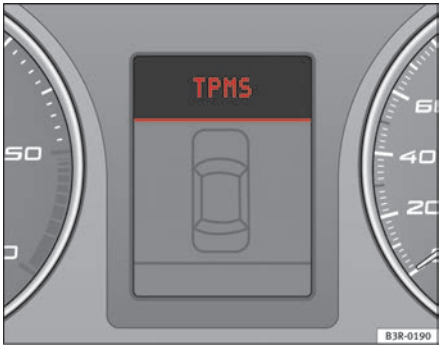

Fig. 45 Display: system fault

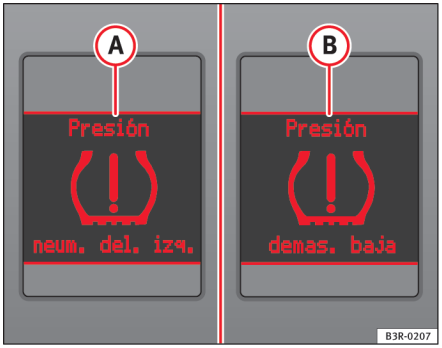

Fig. 46 Display: warning message

The yellow warning (!) lamp remains on if the system is faulty or if the pressure is too low in at least one tyre. In the event of a system fault, the letters TPMS are displayed in the centre of the instrument panel ⇒ page 66, fig. 45. If the tyre pressure drops rapidly, the message (A) ⇒ page 66, fig. 46 will be shown on the central display of the instrument panel. If the pressure loss is more gradual, the message (B) ⇒ page 66, fig. 46 will be shown on the central display of the instrument panel. This message does not show the tyre affected. Should any of these warnings be displayed:

– Stop the engine.

– Check the tyres. Although the warning corresponds to just one tyre, you should also check the others.

– Correct the tyre pressure ⇒ page 237.

For more detailed information on the tyre pressure monitoring system, please refer to ⇒ page 236. ■

Cruise control system*

The indicator lamp on the instrument panel lights up when the cruise control system is operating. ■

Trailer indicators*

This indicator lamp flashes when the indicators are operating while towing a caravan or trailer.

The indicator lamp flashes when the indicators are operated if a trailer is correctly coupled to the vehicle.

Where a turn signal lamp does not work, either on the trailer or on the towing vehicle, the indicator lamp will not flash. ■

Anti-lock brake system (ABS)

The warning lamp monitors the ABS and the integrated electronic differential lock (EDL).

The warning lamp lights up for a few seconds when the ignition is switched on and while the engine is being started. The lamp goes out again after the system has run through an automatic test sequence.

There is a fault in the ABS if:

- the warning lamp does not light up when the ignition is switched on,
- The warning lamp does not go out again after a few seconds.
- The warning lamp lights up when the vehicle is moving.

The vehicle can still brake in the normal way (except that the ABS control function is out of action). Please take the vehicle to a specialist garage as soon as possible. For further information on the ABS ⇒ page 184.

If a malfunction should occur in the ABS, the ESP warning lamp will also light up. ▶

Entire brake system fault

If the ABS warning lamp (ABS) lights up together with the brake warning lamp (!) ⇒ page 70 (with the handbrake released), this indicates not only a fault in the ABS function, but probably also a malfunction in the main brake system as well ⇒ ⚠.

The symbol (!) will light up in the instrument panel if a fault occurs **in the brake system**. Please refer to ⇒ page 77.

Electronic differential lock (EDL) fault

The EDL works in conjunction with the ABS. The ABS indicator lamp will light up (ABS) to indicate an EDL fault. Please take the vehicle to a specialist garage as soon as possible. For further information on the EDL ⇒ page 185.

⚠ WARNING

- **Before opening the bonnet and checking the brake fluid level, observe the warning information in ⇒ page 221, "Work in the engine compartment".**
- **If the brake warning lamp (!) should light up together with the ABS warning lamp (ABS), stop the vehicle immediately and check the brake fluid level in the reservoir. If the fluid level has dropped below the "MIN" mark you must not drive on otherwise there may be an increased accident risk. Obtain technical assistance.**
- **If the brake fluid level is correct, the fault in the brake system may have been caused by a fault in the ABS control function. As a result, the rear wheels can lock relatively easily when braking. Under certain circumstances, the rear of the vehicle could suddenly sway from side to side, with the subsequent danger of skidding. Drive carefully to the nearest specialist garage and have the fault rectified.** ■

Seat belt warning lamp*

The warning lamp acts as a reminder to the driver to fasten the seat belt.

After switching on the ignition, the warning lamp will remain lit until the driver and front passenger (if applicable) have fastened their seat belts. When the vehicle has reached a certain speed, you will also hear a warning signal and the warning light will flash.

For further information on the seat belts, see ⇒ page 22. ■

Indicators and hazard warning lights

Depending on which turn signal is operated, either the left ⇦ or right ⇨ indicator lamp flashes. Both indicator lamps will flash when the hazard warning lights are switched on.

If one turn signal fails, the indicator lamp will start flashing twice as fast as normal.

This does not apply when towing a trailer. Where a turn signal lamp does not work, either on the trailer or on the towing vehicle, the indicator lamp will not flash. For further information on the indicators, see ⇒ page 123. ■

Electronic stabilisation programme

This warning lamp monitors the electronic stabilisation program (ESP).

The warning lamp has the following functions: ▶

- It will start flashing to indicate that ESP is counteracting an unstable driving condition.
- It lights up when the ignition is switched on for approx. 2 seconds while the function is checked.
- The warning lamp will light up if there is a malfunction in the ESP.
- It will light up after the battery has been disconnected.
- The warning lamp will light up if the ESP is switched off.
- It will also come on if a fault should occur in the ABS because the ESP operates in conjunction with the ABS.

If the ESP warning lamp lights up and stays on after the engine is started, this may mean that the control system has temporarily switched off the ESP. In this case the ESP can be reactivated by switching the ignition off and then on again. After this the warning lamp should go out to show that the system is fully functional.

The warning lamp will light up when the ignition is switched on if the battery has been disconnected and then reconnected. It should go out again after driving a short distance if the steering wheel is turned slightly.

For further information on the ESP, see ⇒ page 185. ■

Alternator

The warning lamp signals a fault in the alternator or in the vehicle's electrical system.

The warning lamp lights up when the ignition is switched on. It should switch off after the engine has started.

If the warning lamp lights up when you are driving, you can normally continue as far as the nearest specialist garage. However, given that the battery will be running down, any electrical consumption not absolutely vital should be switched off.

Caution

If the coolant warning lamp in the instrument panel lights up as well as the alternator waning lamp while driving ⇒ page 78, stop the vehicle immediately and switch off the engine. In this case the coolant pump is no longer being driven, and there is a risk of engine damage. ■

Main beam headlights

The indicator lamp lights up when the main beams are on or when the headlight flasher is operated.

For further information on the main beam headlights, see ⇒ page 123. ■

Engine management EPC

This warning lamp monitors the engine management system for petrol engines.

The warning lamp EPC (Electronic Power Control) lights up while the function is being checked.

Note

If the warning lamp lights up while the vehicle is moving, this indicates a fault in the engine management system. The vehicle must be taken immediately to a specialist garage to have the engine serviced. ■

Glow plug system

The indicator lamp lights up while the glow plugs are preheating.

The indicator lamp lights up while the glow plugs are preheating. When the indicator lamp goes out the engine should be started straight away. When the engine is warm, or at outside temperatures above +8°C, the indicator lamp will only light up very briefly.

Note

- If the glow plug indicator lamp should start flashing while the vehicle is moving, this indicates a fault in the engine management system. The engine should be serviced without delay.
- If the indicator lamp fails to light up when the ignition is switched on, this can mean that the glow plug system is defective. The engine should be serviced. ■

Brake system

The warning lamp flashes when the handbrake is applied, or if the brake fluid level is too low or if there is a fault in the ABS system.

If the warning lamp flashes (and the handbrake is not applied), stop the vehicle and check the brake fluid level ⇒ ⚠ ⇒ page 231.

If a failure should occur in the ABS, the ABS warning lamp will light up together with the brake warning lamp ⇒ ⚠.

Handbrake applied

The warning lamp also lights up when the handbrake is applied. In addition to this, the handbrake warning ⇒ page 76 switches on after driving for 3 seconds at a speed above 5 km/h.

WARNING

- **Before opening the bonnet and checking the brake fluid level, observe the warning information in ⇒ page 221, "Work in the engine compartment".**
- **If the brake warning lamp does not go out, or if it lights up when driving, the brake fluid level in the reservoir is too low and this may cause an increased accident risk. Stop the vehicle and do not drive on. Obtain technical assistance.**
- **If the brake warning lamp lights up together with the ABS warning lamp, this can mean that the control function of the ABS is out of action. As a result, the rear wheels can lock relatively easily when braking. Under certain circumstances, the rear of the vehicle could suddenly sway from side to side, with the subsequent danger of skidding. Drive carefully to the nearest specialist garage and have the fault rectified.** ■

Driver information system

General notes

The driver information system in the instrument panel shows the status of various on-board systems at a glance.

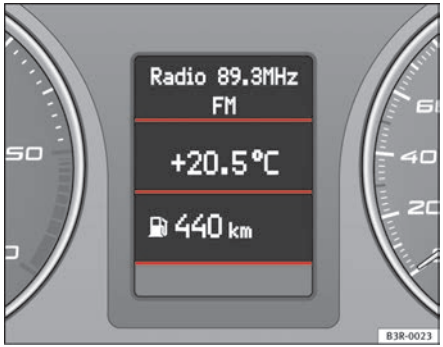

Fig. 47 Cockpit: Digital display in the instrument panel

The display for the driver information system is in the centre of the instrument panel.

The system runs a check on certain components and functions when the ignition is switched on and while the vehicle is moving. The DIS system gives an audible warning if a fault should occur or if servicing is required, and a red or yellow warning symbol (in some cases with a corresponding driver message) appears in the dashboard display.

The driver is informed on the audio system.

The driver information system includes the following functions:

CD and radio display	⇒ page 72
Ambient temperature display	⇒ page 72
Distance to empty (the distance you can travel with the remaining fuel)	⇒ page 73
Door catch/tailgate warning	⇒ page 74
Service interval display	⇒ page 74
auto-check control	⇒ page 75
Driving tips	⇒ page 76
Handbrake warning	⇒ page 76
Bulb monitor*	⇒ page 81
On-board computer*	⇒ page 85
Tyre pressure monitoring*	⇒ page 89
Navigation information*	Separate operating instructions

Note

- If a fault should occur, the display will show a red or yellow warning symbol. A red warning symbol indicates a **serious malfunction** ⇒ page 77. A yellow warning symbol indicates a less serious **malfunction** ⇒ page 79. ■

CD, radio and telephone* display

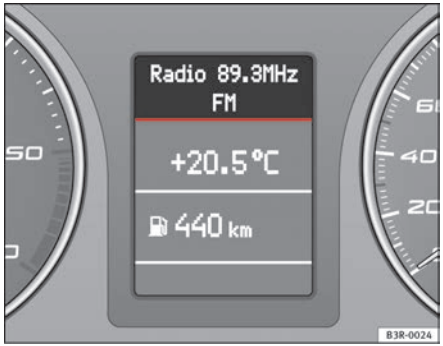

Fig. 48 Display: additional radio information

If the radio is switched on and no Priority 2 faults are indicated by the auto-check control, the "OK" symbol will go out and the display will show the name or frequency of the selected radio station and various other information, depending on the type of radio fitted.

When in CD mode*, the display will show the current track.

If you have a compatible telephone*, the phone book or telephone dialled can also be seen on this display.

These displays appear *in addition* to the display on the radio itself. ■

Ambient temperature display

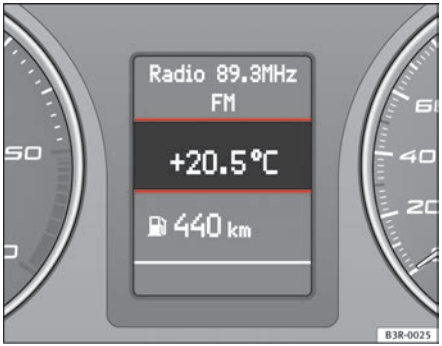

Fig. 49 Display: Ambient temperature display

The ambient temperature is shown in the display when the ignition is switched on ⇒ fig. 49.

At temperatures below +5°C a snowflake symbol appears next to the temperature display. This is to warn the driver to take extra care when there is a risk of **ice** on the road. When the vehicle is stationary or travelling at very low speeds, the temperature displayed may be slightly higher than the actual ambient temperature as a result of heat coming from the engine.

If the vehicle has an air conditioning and the display is changed over to °F (degrees Fahrenheit), the ambient temperature display automatically changes over to °F ⇒ page 165.

WARNING

Do not rely on the ambient temperature display as an ice warning. Please bear in mind that there may be ice on the roads even at ambient temperatures of +5°C – beware of ice patches.

Note

When the display shows route guidance instructions from the navigation system, the ambient temperature appears in the second line of the radio display. ■

Gear display*

This display helps to save fuel.

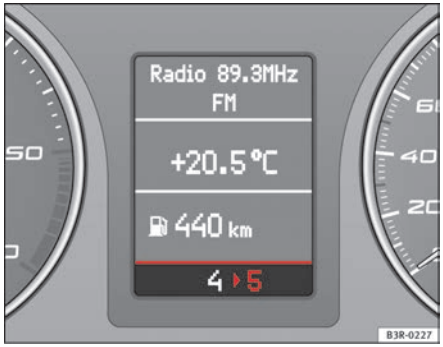

Fig. 50 Gear display

Use the gear display to save fuel. The display in the instrument cluster ⇒ fig. 50 recommends that you select the gear indicated by the arrow. It may also skip a gear, and recommend changing up from 4th gear to 6th gear, for example.

Note

- The display may not recommend any gear-change while you are accelerating.
- If desired, you can have the gear-change display deactivated by an Authorised Service Centre. ■

Fuel range

The fuel range display can help you to plan your trip.

The estimated fuel range is displayed in km. It shows how far the vehicle can be driven with the amount of fuel left in the tank, assuming the same style of driving. The fuel range is displayed in increments of 10 km.

The fuel range is calculated on the basis of the fuel consumption over the last 30 kilometres. The fuel range will increase if you drive in a more economical manner. ■

Door catch/ tailgate warning

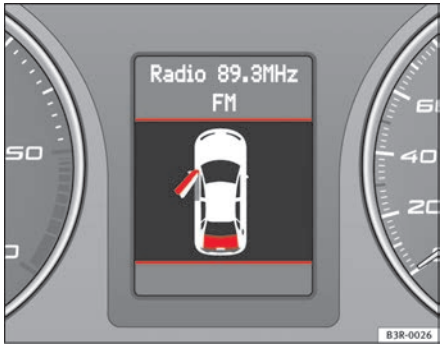

Fig. 51 Display: door catch/tailgate warning

The door catch/tailgate warning symbol lights up if *one or more* of the doors, or the bonnet or tailgate are not properly closed when the ignition is on. The symbol also indicates *which* of these is not properly closed. The display in the illustration ⇒ fig. 51 shows that the front left door is open.

The corresponding part of the pictogram will flash if either the bonnet or tailgate are open. The warning symbol goes out when the bonnet, tailgate and all the doors are closed.

On vehicles with a driver information system and an on-board computer* the door catches/tailgate warning symbol can be switched off by briefly pressing one of the control switches for the on-board computer ⇒ page 86. However, the warning symbol will appear again if any of the doors or the bonnet or tailgate is opened or closed. ■

Service indicator

This display reminds the driver when the next routine service is due.

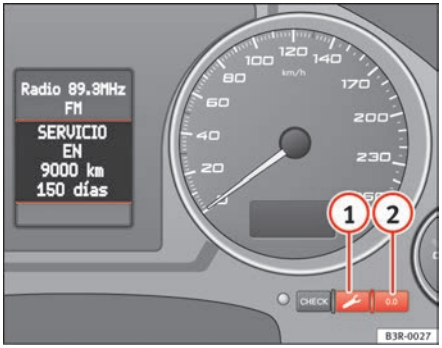

Fig. 52 Detailed view of the instrument panel: Service indicator

Displaying distance to next service

When you press the service button (1) briefly with the ignition switched on, the display will show how far the vehicle can be driven before the next service is due. The query can be made with the engine switched off or in gear up to speeds of 5 km/h. Every time the ignition is switched on, the remaining distance is updated. However, the first time this will be after 500 km.

In new vehicles or following a service, the following display is given for the first 500 km when the remaining distance until the next service is consulted:

Service in ----- km --- days

This is also valid for vehicles with “Extended Service Intervals”*. ▶

Service reminder

The instrument panel controls the distance travelled every day. Calculate the average of these distances travelled and enable the service reminder sufficiently in advance.

The display reverts back to the standard display after about 5 seconds. The remaining distance to the next service is updated every time the ignition is switched on, until the service becomes due.

Service due

When a service is due, **SERVICE!** will appear in the display immediately after you switch on the ignition. The display reverts back to the standard display after about 5 seconds.

Resetting the display

The display is reset by the garage after the service has been carried out. If the service indicator has not been reset by the specialist garage, please perform the following steps:

- Switch the ignition off.
- Press the service button ⇒ page 74, fig. 52 (1) and hold while switching on the ignition. The display will show one of these messages: **Service in ----- km** or **Service!**
- Now press and hold the reset button (2) until the display shows **Service in ----- km --- days** or **Service!**

The display switches out of the reset mode if you do not press the reset button within 5 seconds.

Note

- Do not reset the service indicator between services, otherwise the display will be incorrect.
- The information in the service indicator remains intact if the battery is disconnected.
- The distance to the next service cannot be called up if the system has detected a Priority 1 fault (red symbol). ■

Auto-check system

Introduction

The auto-check system checks important components and vehicle systems. These background checks are run constantly, as long as the ignition is switched on.

A message is displayed in the instrument panel if a fault should occur or if any maintenance or repairs are urgently required. This is accompanied by an audible warning signal. Depending on the priority of the fault, a red or yellow warning symbol lights up in the display.

The red symbols indicate a **danger**, whereas the yellow ones represent a **warning**. Additional messages to assist the driver may be shown with the red or yellow symbols. ■

Driver messages

Additional messages to assist the driver are displayed together with the warning symbols in the instrument panel.

Fig. 53 Instrument panel: CHECK button

Driver messages and red symbols

If a red warning symbol appears in the display, you can press the CHECK button ⇒ fig. 53 to call up an additional driver message.

For example: in the event of an oil pressure malfunction, the oil pressure symbol will appear in the display. If you now press the CHECK button, the following message will appear in the display:

Switch off engine, check oil level

The message will disappear from the display after about 5 seconds. If required, the message can be called up again by briefly pressing the CHECK button.

Driver messages and yellow symbols

If a yellow warning symbol appears in the display, it will automatically be accompanied by the corresponding driver message.

For example, the symbol is displayed to indicate that the windscreen washer fluid level is low. In addition, the following message will appear:

Top up washer fluid

The message will disappear after a few seconds. If required, the message can be called up again by briefly pressing the CHECK button.

Note

- The messages **handbrake applied** and **When stationary apply footbrake while selecting gear** cannot be called up a second time. They will remain in the display until the handbrake is released or until a gear is selected. ■

Handbrake warning

– Release the handbrake.

If you drive by mistake with the handbrake still applied, you will hear a warning buzzer and the display will show the message:

Handbrake applied

The handbrake warning switches on after driving for 3 seconds at speeds above 5 km/h. ■

Red symbols

A red symbol warns of a danger.

Fig. 54 Display: Coolant level warning

– Stop the vehicle.

– Switch the engine off.

– Check the fault. Obtain professional assistance if necessary.

BRAKE	Fault in brake system	⇒ page 77
COOLANT	Coolant level too low / coolant temperature too high	⇒ page 78
OIL PRESSURE	Engine oil pressure too low	⇒ page 78

The red symbols are used to indicate a Priority 1 fault (serious malfunction).

A red symbol is accompanied by *three* warning chimes. The symbols will keep flashing until the faults are corrected. If *several* Priority 1 faults are detected at the same time, the symbols are displayed one after the other for about 2 seconds. ■

Fault in the brake system

A fault in the brake system should be rectified as soon as possible.

If the symbol flashes in the display, there is a fault in the brake system. One of the following messages will appear in the display together with the symbol:

Stop vehicle, check brake fluid and hydraulic fluid levels

Warning! Fault in brake system (ABS) Please visit garage

– Stop the vehicle.

– Check the brake fluid level ⇒ page 231.

If the ABS fails, the ABS warning lamp will light up together with the brake system fault symbol ⇒ .

WARNING

- **Before opening the bonnet and checking the brake fluid level, observe the warning information in ⇒ page 221, "Work in the engine compartment".**
- **If the brake fluid level in the reservoir is too low, this could result in an accident. Do not drive on. Obtain technical assistance.**

WARNING (continued)

- **If the brake warning lamp lights up together with the ABS warning lamp, this can mean that the control function of the ABS is out of action. As a result, the rear wheels can lock relatively easily when braking. Under certain circumstances, the rear of the vehicle could suddenly sway from side to side, with the subsequent danger of skidding. Drive carefully to the nearest specialist garage and have the fault rectified.** ■

Fault in the cooling system

Faults in the cooling system must be rectified immediately.

If the symbol flashes in the display, this means that either the coolant *temperature* is too high or the coolant *level* is too low. The following message will appear in the display together with the symbol:

Switch off engine and check coolant level

– Stop the vehicle.

– Switch the engine off.

– Check the coolant level ⇒ page 226.

– Add more coolant if necessary ⇒ page 227.

– Wait for the symbol to go out before driving on.

– Obtain professional assistance if necessary.

If the coolant level is correct, the overheating may be caused by a malfunction of the radiator fan.

If the alternator warning lamp lights up as well ⇒ page 69, it is possible that the drive belt has broken.

Caution

Do not drive on if the symbol has come on to indicate a fault in the cooling system, otherwise there is a risk of engine damage. ■

Engine oil pressure too low

If the engine oil pressure is too low the fault must be rectified immediately.

If the symbol flashes in the display, the oil pressure is too low. The following message will appear in the display together with the symbol:

Switch off engine, check oil level

– Stop the vehicle.

– Switch the engine off.

– Check the engine oil level ⇒ page 224.

– Obtain professional assistance if necessary.

Engine oil level too low

If the engine oil level is too low, add more oil ⇒ page 224.

Engine oil level correct

If the symbol flashes and the engine oil level is correct, obtain professional assistance. Do not drive on. Do not continue to run the engine, **even at idle speed**.

Note

The oil pressure warning lamp is not an indicator for the oil level. The oil level should therefore be checked regularly, preferably every time you fill the tank. ■

Yellow symbols

A yellow symbol indicates a warning.

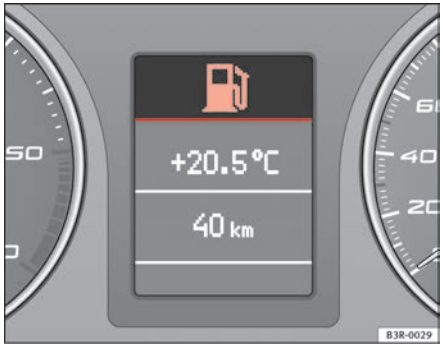

Fig. 55 Display: Fuel level low

	Brake light failure warning light	⇒ page 80
	Fuel level low	⇒ page 80
	Check engine oil level	⇒ page 80
	Engine oil sensor faulty*	⇒ page 80
	Diesel particulate filter* obstructed	⇒ page 80
	Light sensor/ rain sensor faulty	⇒ page 80
	Brake pad worn	⇒ page 80
	Speed warning 1	⇒ page 81
	Dynamic headlight range control* faulty	⇒ page 81
	Self-directing headlights* faulty	⇒ page 81
	Washer fluid level low*	⇒ page 81
	Speed warning 2*	⇒ page 81
	Battery voltage too high or too low*	⇒ page 81
	Bulb monitor*	⇒ page 81
	Tyre pressure monitoring system* Loss of pressure	⇒ page 89
TPMS	Tyre pressure monitoring system* System not available	⇒ page 66

Yellow symbols are used to indicate a Priority 2 fault (warning).

Yellow symbols are accompanied by *one* warning chime. The function indicated should be checked as soon as possible. If several Priority 2 faults are detected at the same time, the symbols are displayed one after the other for about 2 seconds at a time. ■

Brake light failure

This warning light will appear on the upper part of the display if any of the brake lights has failed. A text message in the central part of the display indicates which brake light has failed (left or right). ■

Fuel level low

When this symbol comes on for the first time, there are about 8 to 10 litres of fuel left in the tank. You should fill up as soon as possible ⇒ page 216. ■

Check engine oil level

If the symbol lights up, please check the engine oil level as soon as possible ⇒ page 224. Top up the oil at the next opportunity ⇒ page 224. ■

Engine oil sensor defective*

If the symbol lights up, take the vehicle to a qualified workshop and have the oil level sensor checked. Until then it is advisable to check the oil level every time you fill up with fuel ⇒ page 224. ■

Diesel particulate filter obstructed

If the symbol lights up, you may be able to contribute towards automatic filter cleaning by driving in the right manner. You should drive at a speed of at least 60 km/h for about 15 minutes in 4th or 5th gear, at an engine speed of around 2000 rpm. The increase in temperature will burn off any soot in the filter. When cleaning is successful, the symbol switches off.

If the light on symbol does not go off, take the vehicle to a specialist garage to repair the fault.

For further information on the diesel particulate filter, see ⇒ page 191.

WARNING

It is essential that you adjust your speed to suit the weather, road, terrain and traffic conditions. The recommended driving speed must never lead to the driver disregarding the traffic regulations. ■

Light sensor/ rain sensor faulty

Automatic headlights / automatic wipers faulty

If the symbol appears, this means that the light sensor / rain sensor is not working. For safety reasons, the dipped beam headlights will then be switched on permanently when the light switch is set to the **AUTO** position. However, you can still switch the lights on and off in the normal way with the light switch. If the rain sensor is faulty, the functions operated via the windscreen wiper lever will still be available. You should have the light sensor / rain sensor checked by a specialist garage as soon as possible. ■

Worn brake pads

If the symbol lights up, have the front brake pads (and, for safety's sake, the rear pads as well) inspected by a specialist garage. ■

Speed warning 1

If the symbol lights up, this means you are exceeding the speed that has been pre-set with the speed warning function. You should reduce your speed accordingly ⇒ page 82. ■

Headlight range control faulty

This symbol indicates a malfunction in the dynamic headlight range control. Take the vehicle to a specialist garage to have the dynamic headlight range control function repaired. ■

Self-directing headlights* faulty

Self-directing headlights faulty

This symbol indicates that the self-directing headlight system is faulty. Take the vehicle to a specialist garage to have the headlights or the self-directing headlight control unit repaired. ■

Washer fluid level low

If the symbol lights up, top up the fluid for the windscreen washer and headlight washer system* ⇒ page 228. ■

Speed warning 2

If the symbol lights up, this means you are exceeding the speed that has been pre-set. You should reduce your speed accordingly ⇒ page 82. ■

Battery voltage too high or too low

If the symbol lights up, take the vehicle to a specialist garage and have the following items checked:

- Ribbed belt
- Battery condition

It is also advisable to check whether the alternator warning lamp has come on ⇒ page 69. ■

Bulb monitor

The bulb monitor checks whether the lights on the vehicle are working.

If a defective bulb is detected, or if one of the lights has failed for any reason, the bulb monitor symbol will appear in the display together with an additional message (which goes out after 5 seconds). For instance, if the rear left turn signal is not working, the display in the instrument panel will show the following message:

Left rear turn signal

The message disappears after 5 seconds. Press the CHECK button briefly if you wish to call up the message again.

If the display indicates that one of the lights is not working, this can have a number of causes:

- Bulb failure ⇒ page 258.
- A “blown” fuse ⇒ page 256, “Changing fuses”.
- Faulty electrical wiring.

Have the components replaced or the wiring repaired as necessary by a specialist garage.

WARNING

- **Bulbs are highly sensitive to pressure. The glass can break when you touch the bulb, causing injury.**
- **The high voltage element of gas discharge lamps* (xenon light) must be handled correctly. Otherwise, there is a risk of death.** ■

Speed warning

Introduction

The speed warning function can help prevent you exceeding a particular pre-set maximum speed.

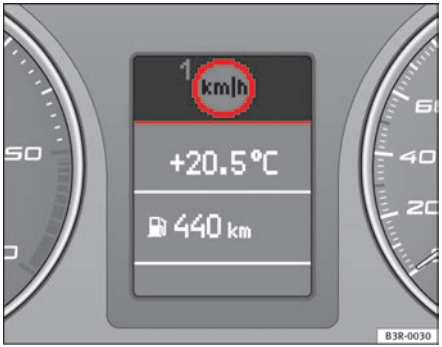

Fig. 56 Display: Speed warning function

The speed warning function will warn the driver if a pre-set maximum speed is exceeded. The system gives an audible warning signal if the set speed is exceeded by about 10 km/h. A warning symbol will also appear in the display ⇒ fig. 56.

The speed warning function has **two different warning speeds**, which operate independently and serve slightly different purposes:

Speed limit warning 1

With speed limit warning 1, the maximum speed can be changed while driving. The speed limit that has been set remains stored until the ignition is switched off, or until it is changed or cleared.

The speed limit warning symbol for speed warning 1 ⇒ page 82, fig. 56 will appear in the display if you exceed the pre-set speed. It goes out again if the speed is reduced below the set speed limit.

The symbol also goes out if the speed is *increased* to more than about 40 km/h above the set speed for at least 10 seconds. However, this does not cancel the speed limit that was originally set.

Setting speed limit warning 1 ⇒ page 83.

Speed limit warning 2

With speed limit warning 2, the speed limit can only be changed or cleared when the ignition is switched off. You are recommended to store this speed limit warning if you *always* wish to be reminded of a particular speed limit. This could be when driving in countries with general speed limits, or if a particular speed should not be exceeded when winter tyres are fitted etc.

The speed limit warning symbol for speed warning 2 will appear in the display if you exceed the pre-set speed. Unlike speed limit warning 1, the warning symbol only goes out once the road speed has dropped below the set value again.

Setting speed limit warning 2 ⇒ page 84.

Note

Please bear in mind that, even with the speed warning function, it is still important to keep a eye on the car's speed with the speedometer and to observe the legal speed limits. ■

Setting speed limit warning 1

Use the CHECK button to set speed limit warning 1.

Fig. 57 Detailed view of the instrument panel: CHECK button

Setting the speed limit

– Drive at the desired maximum speed.

– Press the CHECK button and hold it down until the symbol ⇒ page 82, fig. 56 appears.

Clearing the speed limit

– Drive the vehicle at a minimum of 5 km/h.

– Press the CHECK button for at least two seconds.

The speed warning symbol lights up briefly in the display when the button is released to confirm that the selected speed has been stored. The speed limit that has been selected remains stored until another speed is selected ▶

with a brief push of the button, or until the memory is cleared with a long push of the button. ■

Setting speed limit warning 2

Speed limit warning 2 is set using the switches on the windscreen wiper lever.

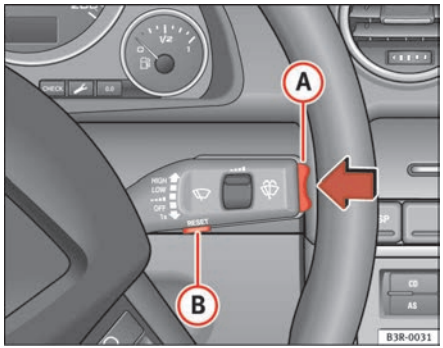

Fig. 58 Windscreen wiper lever: Function selector switch

Setting the speed limit

– Switch the ignition off.

– Briefly press the CHECK button in the instrument cluster ⇒ page 83, fig. 57. The distance display and the digital clock will light up.

– Press the CHECK button for at least two seconds. The display will show the speed limit which is currently set **or**, if no speed limit has been set, the crossed out warning symbol for speed limit 2.

– To change the speed limit, press the top or bottom of the function selector switch on the windscreen wiper lever (A) ⇒ fig. 58. The speed limit displayed will then increase or decrease by 10 km/h at a time.

Clearing the speed limit

– Switch the ignition off.

– Briefly press the CHECK button in the instrument cluster ⇒ page 83, fig. 57. The distance display and the digital clock will light up.

– Press the CHECK button for at least two seconds. The display will show the speed limit which is currently set.

– Now press and hold the Reset button on the windscreen wiper lever (B) ⇒ fig. 58 until the crossed out warning symbol for speed limit 2 appears on the display.

The display lighting for the mileage recorder and digital clock goes off again a few seconds after the button is released. ■

On-board computer

Introduction

The on-board computer provides you with useful information during a journey, including average and current fuel consumption, average speed, fuel range, driving time and distance covered.

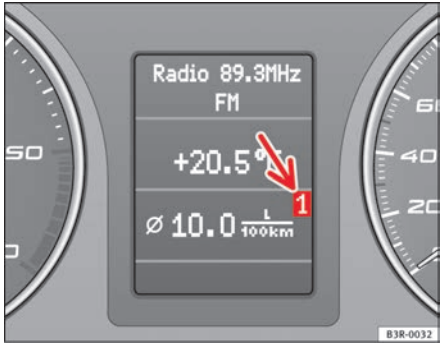

Fig. 59 On-board computer: memory 1

Press RESET button (B) ⇒ page 86, fig. 60 to switch back and forward between the functions of on-board computers 1 and 2.

The numbers in the display ⇒ fig. 59 indicates which of the two memories is currently in use. The figure **1** means that the display is showing the information in the single journey memory (on-board computer 1). The figure **2** means that the display is showing the information in the total journey memory (on-board computer 2).

Single-journey memory (on-board computer 1)

The single-journey memory processes the information on a journey from the time the ignition is switched on until it is switched off. If the journey is resumed **within two hours** after the ignition is switched off, the new figures are automatically included in the calculation. If the journey is interrupted for **more than two hours** the stored information is automatically erased when you resume your journey.

Total-journey memory (on-board computer 2)

Unlike the single-journey memory, the total-journey memory is not erased automatically. Hence, you can determine the period for which you wish the on-board computer to supply figures.

Fuel range

The estimated fuel range is displayed in km. The fuel range is displayed in increments of 10 km.

Average fuel consumption

This mode shows the average fuel consumption since the memory was last cancelled in litres/100 km.

Instantaneous fuel consumption

The display shows the instantaneous fuel consumption in litres/100 km. When the vehicle is stationary, the computer will display the last value in the memory.

Average speed

This mode shows the average speed driven since the memory was last cancelled (in km/h).

Driving time

This display shows the period of time which has elapsed since the memory was last cancelled. The longest possible period it can cover is 999 hours and 59 minutes.

Driving time warning

After 2 hours of continuous driving, the display automatically switches over to the driving time display of **2:00**. At the same time the driving time display starts flashing. This is to remind the driver to take a break.

The driving time warning can be switched off by briefly pressing the function selector switch or the Reset button ⇒ fig. 60.

If you continue driving or take a break for less than 10 minutes, the driving time warning will switch on once again when the total driving time is **4:00** hours, **6:00** hours, etc. However, if you take a break for more than 10 minutes, the driving time warning clock will be erased.

Distance covered

This display shows the distance you have covered since the memory was last cancelled. The longest possible distance which can be recorded is 9999.9 km.

Note

- The displays for fuel consumption (average and instantaneous), fuel range and speed are shown in metric units.
- The information in the memory is lost if the battery is disconnected. ■

Operating

The on-board computer is controlled by means of two switches on the windscreen wiper lever.

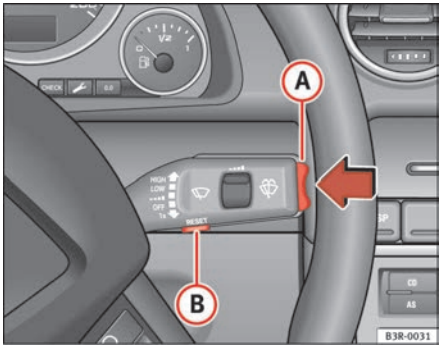

Fig. 60 Windscreen wiper lever: On-board computer controls

Enabling the on-board computer

– Press the reset button (B) repeatedly until the on-board computer (memory 1 or 2) ⇒ page 85, fig. 59 is displayed.

Selecting the function

– Press the top or bottom of the function selector switch (A) ⇒ fig. 60. This displays the functions of the on-board computer in sequence.

Resetting to zero

– Press and hold the Reset button (B) for at least two seconds.

The following values can be reset to zero using the Reset button: ▶

- Journey duration
- Distance covered
- Average fuel consumption
- Average speed

The on-board computer can only be operated when the ignition is switched on. When the ignition is switched on, the display shows the function that was last selected.

As well as the figures from the on-board computer (computer 1 or 2), the display can also show information from the navigation system*. Press the Reset button (B) briefly to switch back and forward between these displays.

Note

- If you keep the Reset button pressed for longer than two seconds, it will reset the currently displayed figure to zero (for instance average fuel consumption).
- Faults detected by the auto-check control will be displayed even if the display is off.
- The information in the memory is lost if the battery is disconnected. ■

Menu display

Introduction

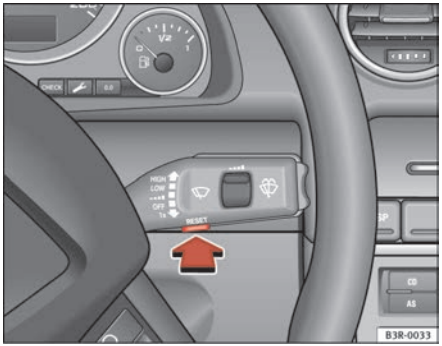

Fig. 61 Windscreen wiper lever: Menu selection button

Fig. 62 Display: Main menu

Some of your vehicle's functions can be adjusted, activated and controlled by **menus**. With the aid of the menus you can then also select the information you wish to see displayed on the DIS display. This is only possible when the ignition is on. The menu is enabled using the Reset button on the windscreen wiper lever ⇒ page 87, fig. 61.

The **main menu** lists the different display types (or basic commands):

Programming

Check

Menu off

Help

The main menu options have the following submenus:

Programming	Clock	⇒ page 88
	Computer	⇒ page 88
	Speed warning	⇒ page 82
	Radio info (on/off)	
	Units: for measuring distance, fuel consumption and temperature	⇒ page 88
	Language: you can select one of 6 languages.	⇒ page 88
Check	Service	⇒ page 74
Menu off	When the menu is switched off, the display shows the same information as on vehicles without the menu function.	
Help	This function helps you select the options you require.	

Controlling the menu

The menu display is called up via the Reset button and the rocker switch on the windscreen wiper lever. Use these controls to make checks and adjust the settings.

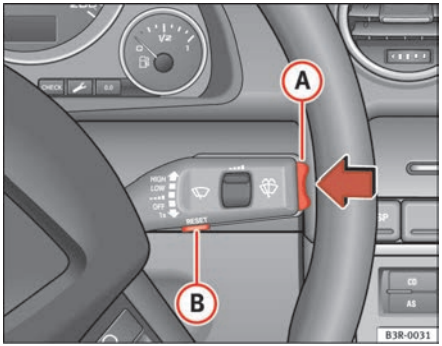

Fig. 63 Windscreen wiper lever: Reset button and rocker switch

Functions of the Reset (B) ⇒ fig. 63 and the **rocker switch** (A):

Enabling the menu

– Press the Reset button until the menu display ⇒ page 87, fig. 62 appears.

Selecting and setting

– Press the rocker switch to select one of the menus. Press "up" or "down" on the switch to select the options accordingly.

Entering and confirming

– Press the Reset button.

Use the rocker switch to select the menus and adjust various values. The selected values are highlighted on a red background.

By pressing the Reset button, you can confirm the option you have selected or the value you have set. Selected functions are marked with a tick.

The following symbols are used:

Cursor	Function selected	Red background (active function)
✓	Tick	Selected
❑	Box	Not selected
▲	Triangle pointing upwards	Previous page
▼	Triangle pointing down-wards	Next page

Tyre pressure monitoring

Introduction

The tyre pressure monitoring system constantly checks the pressure of the tyres.

The system warns the driver in the event of a loss of pressure by means of symbols and messages in the instrument panel display. The system works with the help of the ABS sensors in the wheels.

Please bear in mind that the tyre inflation pressure is also influenced by the temperature of the tyre. Tyre pressure increases about 0.1 bar for each 10°C in tyre temperature increase. The tyre heats up while the vehicle is being driven and the tyre pressure will rise accordingly. Therefore, you should only adjust the tyre pressures when they are *cold* (i.e. approximately at ambient temperature).

To ensure that the tyre pressure monitoring system works reliably, you should check and, if necessary, adjust the tyre pressures at regular intervals and store the correct pressures (reference values) in the system.

A tyre pressure information label is attached to the inside of the fuel tank flap.

WARNING

- **Never adjust tyre pressure when the tyres are hot. This may damage or even burst the tyres. Risk of accident!**
- **An insufficiently inflated tyre flexes a lot more at high speeds and causes significant heating of the tyre. Under these conditions, the tyre bead may be released or the tyre may burst. Risk of accident!**

For the sake of the environment

Under-inflated tyres lead to increased fuel consumption and tyre wear.

Note

- Responsibility for ensuring that the tyres are correctly inflated remains with the driver; the system can only provide assistance.
- Pressure can only be adjusted when the tyres are at ambient temperature.

Tyre pressure monitoring display (!)

The tyre pressure should be corrected as soon as possible if it is too low.

If the (!) symbol appears, the tyre pressure on at least one of the wheels is too low.

– Stop the vehicle.

– Check the tyre(s).

– Correct the tyre pressure ⇒ page 237.

For more detailed information on the tyre pressure monitoring system, please refer to ⇒ page 236. ■

Steering wheel controls

The multi-function steering wheel

Introduction

You can use the multi-function steering wheel to quickly and easily operate selected functions of the radio, CD, and telephone.*

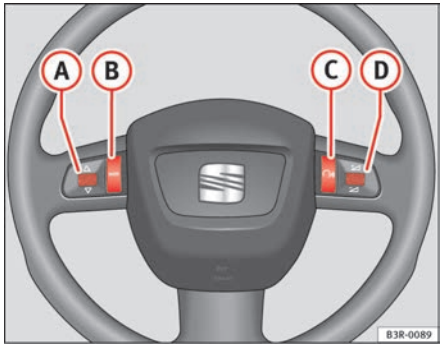

Fig. 64 Controls on the multi-function steering wheel

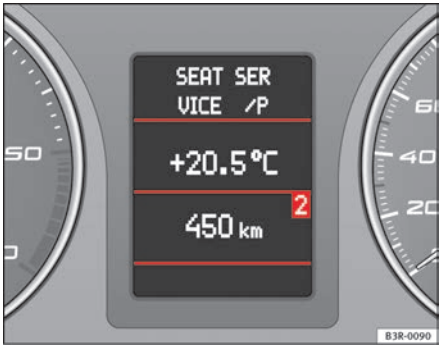

Fig. 65 Driver information system

The functions are operated by pressing or scrolling the controls (A) to (D) on the multi-function steering wheel ⇒ fig. 64:

- Press the MODE button (B) repeatedly to switch between modes, which are then displayed in the driver information system ⇒ fig. 65.
- Scroll and press the left thumbwheel (A) to select a function from one of the menus.
- The speech control system* for the on-board phone system is enabled by pressing the talk button (C). Pressing the talk button again disables speed control*.
- Scroll the right thumbwheel (D) up/down to raise/lower the volume as desired. ■

Steering wheel audio version controls

	A			B (Mode)	C (PTT)	D		
	+	-	Press			+	-	Press
Radio mode	Station search. Increase frequency	Station search. Decrease frequency	1st press: starts the search. 2nd press: cancels the search	One long press: block the steering-wheel controls Short press: activates the steering-wheel controls (if they are blocked / without specific function (if they are not blocked)	No function specified	Volume up	Volume down	MUTE
CD/ iPod-USB Mode	CD mode: next track. iPod/USB Mode: next track	CD mode: previous track. iPod/USB Mode: previous track	CD mode: fast forward. iPod/USB Mode: fast forward			Volume up	Volume down	MUTE
MP3 mode	Next track	Previous track	Fast forward			Volume up	Volume down	MUTE

Steering wheel Audio + Telephone version controls

	A			B (Mode)	C (PTT)	D		
	+	-	Press			+	-	Press
Radio mode	Station search. Increase frequency	Station search. Decrease frequency	1st press: starts the search. 2nd press: cancels the search	Change to phone	Enable voice recognition	Volume up	Volume down	MUTE
CD/ iPod-USB Mode	CD mode: next track. iPod/USB Mode: next track	CD mode: previous track. iPod/USB Mode: previous track	CD mode: fast forward. iPod/USB Mode: fast forward			Volume up	Volume down	MUTE
MP3 mode	Next track	Previous track	Fast forward			Volume up	Volume down	MUTE
Phone mode	Next name in phone book	Previous name in phone book	Accept	Change to radio / CD / iPod-USB / MP3		Volume up	Volume down	No function specified
Incoming call mode	No function specified	No function specified	One press: accept call. Held down: reject call	No function specified	No function specified	Volume up	Volume down	No function specified
Active call mode	No function specified	No function specified	End call	No function specified	No function specified	Volume up	Volume down	No function specified
Voice activation mode	No function specified	No function specified	No function specified	No function specified	Cancel	Volume up	Volume down	No function specified

Steering wheel controls, Navigation System* version

	A			B (Mode)	C (PTT)	D		
	+	-	Press			+	-	Press
Radio mode	Station search. Increase frequency	Station search. Decrease frequency	1st press: starts the search. 2nd press: cancels the search	No specified function	No function specified	Volume up	Volume down	Repetition of the last navigation order (only if active)
CD/ iPod-USB Mode	CD mode: next track. iPod/USB Mode: next track	CD mode: previous track. iPod/USB Mode: previous track	CD mode: fast forward. iPod/USB Mode: fast forward			Volume up	Volume down	Repetition of the last navigation order (only if active)
MP3 mode	Next track	Previous track	Fast forward			Volume up	Volume down	Repetition of the last navigation order (only if active)

Steering wheel controls, Navigation System + Telephone* version

	A			B (Mode)	C (PTT)	D		
	+	-	Press			+	-	Press
Radio mode	Station search. Increase frequency	Station search. Decrease frequency	1st press: starts the search. 2nd press: cancels the search	Change to phone	Enable voice recognition	Volume up	Volume down	Repetition of the last navigation order (only if active)
CD/ iPod-USB Mode	CD mode: next track. iPod/USB Mode: next track	CD mode: previous track. iPod/USB Mode: previous track	CD mode: fast forward. iPod/USB Mode: fast forward			Volume up	Volume down	Repetition of the last navigation order (only if active)
MP3 mode	Next track	Previous track	Fast forward			Volume up	Volume down	Repetition of the last navigation order (only if active)
Phone mode	Next name in phone book	Previous name in phone book	Accept	Change to radio / CD / iPod-USB / MP3		Volume up	Volume down	Repetition of the last navigation order (only if active)
Incoming call mode	No function specified	No function specified	One press: accept call. Held down: reject call	No function specified	No function specified	Volume up	Volume down	Repetition of the last navigation order (only if active)
Active call mode	No function specified	No function specified	End call	No function specified	No function specified	Volume up	Volume down	Repetition of the last navigation order (only if active)
Voice activation mode	No function specified	No function specified	No function specified	No function specified	Cancel	Volume up	Volume down	No function specified

Unlocking and locking

Remote control keys

Set of keys

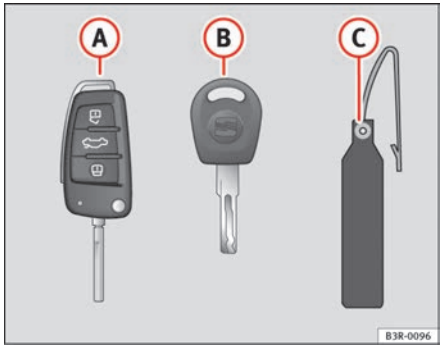

Fig. 66 Set of keys supplied with the vehicle

Fig. 67 Remote control key: Release button

The set of keys belonging to your vehicle consists of the following items:

(A) one remote control key.
(B) one key without remote control.
(C) one plastic key tab containing the key number.

Remote control key

The remote control key will lock and unlock the car and start the engine. Press the release button ⇒ fig. 67 -arrow- to unfold the key out of the handle and to fold it back in.

Plastic key tab

Spare keys cannot be issued without the key number on the plastic key tab. Therefore:

- Always keep the key tab in a safe place.
- Never leave the key tab in the vehicle.
- If you sell the vehicle, please give the plastic key tab to the new owner. ▶

Replacing a key

If you lose a key, please contact the Technical Service. Have the remote control coding for *that* key disabled. You should therefore bring the plastic key tab and all available keys with you. It is also important to notify your insurance company if a key or the plastic key tab has been lost.

WARNING

- **Always take the key with you when leaving the vehicle, even if you only intend to be gone for a short time. This is particularly important if there are children in the car, as they might otherwise be able to start the engine or use power-operated equipment (e.g. the electric windows), which could lead to injuries.**
- **Wait for the vehicle to come to a standstill before removing the ignition key from the lock! Otherwise, the steering lock could engage suddenly, causing an accident.** ■

Indicator light on the remote control key

The condition of the battery in the remote control key is monitored by the indicator light.

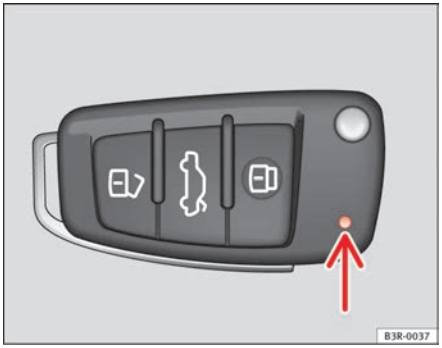

Fig. 68 LED on the remote control key

Condition of the key battery

The indicator light ⇒ fig. 68 (arrow) flashes when one of the buttons is pressed. If the indicator light does not light up or flash, this means that the battery is exhausted and must be replaced.

Replacing the batteries ⇒ page 98. ■

Replacing the key battery

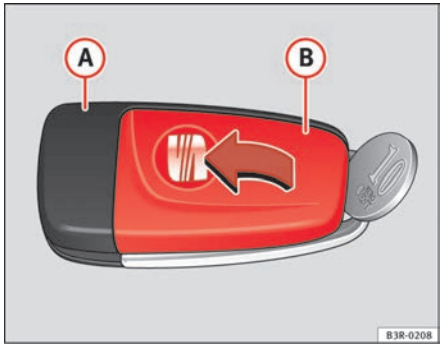

Fig. 69 Master key: Opening the cover

We recommend you have the batteries changed in a specialist garage. If you decide to change the used battery yourself, follow the steps below:

– **Carefully** prise apart the key ⇒ fig. 69 (A) and the cover (B) using a coin.

– Remove cover in the direction of the arrow.

– Remove the used battery from the cover.

– Insert the new battery. Make sure that the "+" symbol on the battery is facing downwards. The correct polarity is indicated on the cover.

– After inserting the battery, align the cover and key and press the two parts together.

For the sake of the environment

Used batteries must be disposed of appropriately and must not be discarded with ordinary household waste.

Note

- The system must be re-synchronised after each battery replacement to be able to lock and unlock the car using the remote control ⇒ page 107.
- The new battery must be of the same type as the original. ■

Electronic immobiliser

The electronic immobiliser is designed to prevent unauthorised persons from starting up the vehicle.

There is an electronic chip inside the key which automatically deactivates the immobiliser when the key is inserted into the ignition lock. The electronic immobiliser is enabled automatically when the ignition key is removed from the ignition lock after coming to a stop.

If an uncoded key is used, the message **SAFE** will appear in the trip recorder display.

Note

- The engine can only be started using an original SEAT key with the correct code.
- It may not be possible to start the engine with the key if there is another ignition key from a different make of vehicle on the same key tab. ■

Central locking

Description

The central locking system enables you to lock and unlock all the doors, the tailgate and the tank flap together.

The central locking system on your vehicle locks and unlocks *all* the doors and the tank flap simultaneously. The tailgate is unlocked when the vehicle is opened. However, the handle must be used to open it. The vehicle can be locked and unlocked using the remote control ⇒ page 106 **or** by turning the key in the lock in the driver's door.

The windows can also be centrally opened or closed using the central locking system ⇒ page 111. The sun roof* can be closed but not opened using the central locking system.

The central locking system is combined with an **anti-theft security system**. If the vehicle is locked with the key from the outside, the interior opening levers stop working, which prevents unauthorised persons from entering the vehicle.

Should the central locking system fail to work, you can still normally enable all the locks individually. The fuel tank flap can be released manually if necessary. For manual release of the tank flap ⇒ page 217.

Automatic locking function (Auto Lock)*

The **Auto Lock*** function automatically locks all doors and the tailgate when the vehicle exceeds a speed of about 15 km/h.

The vehicle is unlocked again automatically when the ignition key is removed. Alternatively, the driver can also unlock the vehicle using the central locking switch or by opening one of the doors.

WARNING

Do not leave anyone (especially children) inside the car if it is locked from the outside and the anti-theft security system is enabled, as the doors and windows cannot then be opened from the inside. Locked doors could delay assistance in an emergency, potentially putting lives at risk.

Note

- Should the central locking system fail to work, you can still lock and unlock the driver's door and the tailgate using the key. For manual release of the tank flap ⇒ page 217. Locking the doors manually if central locking fails to work ⇒ page 102.
- The anti-theft mechanism and the anti-theft alarm* cannot be enabled if the central locking is not working.
- **Never leave any valuable items in the vehicle unattended. Even a locked vehicle is not a safe.** ■

Unlocking the vehicle with the key

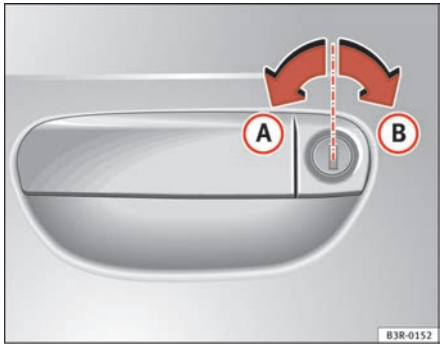

Fig. 70 Turning the key to enable the open and close functions

– To unlock the vehicle, turn the key in the driver's door to position (A) ⇒ fig. 70.

– Pull the handle to open the door.

- This will unlock all the doors, the tailgate and the tank flap simultaneously.
- The anti-theft security system will be disabled. ■

Locking the vehicle with the key

– To lock the vehicle, turn the key in the driver's door to position (B) ⇒ fig. 70 ⇒ ⚠.

- This will lock all the doors and the tailgate.
- The interior lights are switched off, provided the light switch is in the courtesy light position.
- The windows and the sun roof* will close as the key is *held* in the locking position.
- The anti-theft security system will be enabled immediately.

Locking the vehicle without enabling the anti-theft security system

With the anti-theft security system enabled, it is more difficult to break into the vehicle. If the anti-theft security system has been enabled, the inside door handles and the central locking switch will not work ⇒ ⚠.

If you are leaving passengers in the vehicle while it is parked, it is possible to lock the vehicle without enabling the anti-theft security system.

To do so, turn the key in the driver's door **twice** in quick succession to position (B) ⇒ fig. 70.

⚠ WARNING

Do not leave anyone (especially children) in the car if it is locked from the outside and the anti-theft security system is enabled, as the doors and windows cannot then be opened from the inside. Locked doors could delay assistance in an emergency, potentially putting lives at risk.

Caution

If the driver's door is locked using the key while open, the car will be automatically immobilised and the alarm triggered.

Note

- Please note that when the vehicle is locked without enabling the anti-theft mechanism, the anti-theft alarm* remains operative. You should therefore switch off the interior monitor* before locking the vehicle, as otherwise the alarm* could be triggered unintentionally. ▶

- The driver's door cannot be locked using the central locking system when it is still open. The door must be locked separately after it has been closed. This helps to prevent you from being locked out of the vehicle. ■

Central locking switch

The central locking system can be enabled from inside the vehicle using the central locking switch on the driver's door.

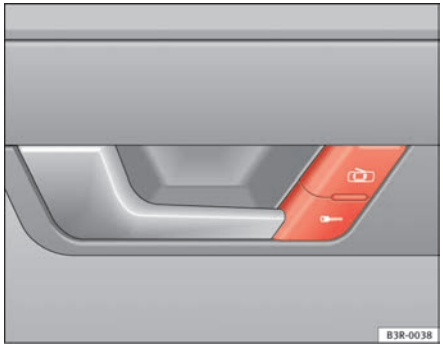

Fig. 71 Detail of driver door: Central locking switch

Locking the vehicle

– Press the ⇒ fig. 71 ⇒ button.

Unlocking the vehicle

– Press the button.

Please note the following when using the central locking switch to lock your vehicle:

- The doors and the tailgate cannot be opened from the *outside* (for security reasons, e.g. when stopped at traffic lights).
- You can open the doors individually from the inside by pulling the inside door handle.
- When the driver's door is open, it cannot be locked by pressing the central locking switch and then closing the door. This helps to prevent you from being locked out of the vehicle. The door has to be locked separately after it has been closed.
- In the event of an accident in which the airbags inflate, doors locked from the inside will be automatically unlocked to facilitate access and assistance.

WARNING

The central locking switch is still operative when the ignition is switched off. This switch can be used to automatically lock all the doors and the tailgate. However, since this makes it difficult to enter the car from the outside, you should never leave children unattended in the vehicle. Locked doors could delay assistance in an emergency, potentially putting lives at risk.

Note

The central locking switch inside the vehicle will not be operative if the anti-theft mechanism has been enabled. ■

Security central locking*

The security central locking feature allows you to only unlock the driver's door and the tank flap. All other doors and the tailgate remain locked.

Unlocking the driver's door and tank flap

– Turn the key *once* to the unlock position, or press the unlock button on the remote control *once*.

Unlocking all the doors, the tailgate and the tank flap simultaneously.

– Turn the key *twice* within five seconds, or press the unlock button on the remote control *twice* within five seconds.

The security system and the anti-theft alarm* are immediately disabled if you unlock only the driver's door, without unlocking the other doors ⇒ page 108. ■

Locking the doors manually if the central locking fails to work

Should the central locking system fail to work at any time (for instance if there is no electrical power supply), each door will have to be locked separately.

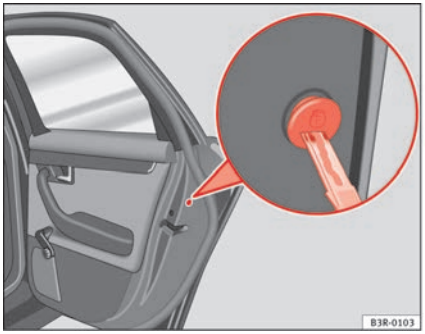

Fig. 72 Manual locking device

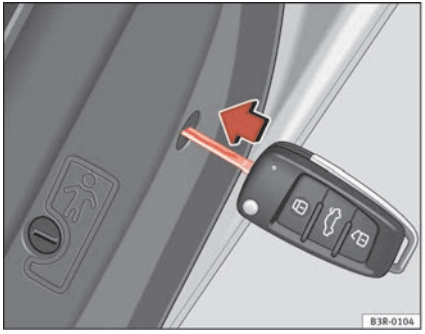

Fig. 73 Enabling manual locking

A manual locking device (only visible when the door is open) is provided on the front passenger's door and the rear doors.

– Open the door.

– Use the key ⇒ page 102, fig. 72 to turn the cap slightly and then fold it downwards.

– Insert the key into the slot inside ⇒ page 102, fig. 73 and turn it as far as the stop, i.e. about 90 degrees to the right (doors on right side) or to the left (door on the left side).

Once the door has been closed it can no longer be opened from the outside. The door can be opened from the inside by pulling the door handle. If the child-proof catch is engaged on one of the rear doors, the door can be opened by pulling the inside door handle once and then opening the door from the outside. ■

Tailgate

Tailgate: opening and closing

Fig. 74 Luggage compartment: opening from the outside

Opening the tailgate

– Pull on the release lever ⇒ fig. 74 and lift the tailgate at the same time.

– Then lift up the tailgate. If your vehicle is equipped accordingly, the tailgate will open automatically*.

Closing the tailgate

– Pull down the tailgate and let it drop into the latch ⇒ ⚠.

Use the recessed handle in the interior trim to make it easier to pull down the tailgate. ▶

WARNING

- **After closing the boot lid, always check that the catch has engaged properly. If not, the boot could open while driving, even if it has been locked. Risk of accident!**
- **The tailgate must always be completely closed when the vehicle is moving, otherwise toxic exhaust fumes may be drawn into the vehicle. Danger of poisoning!**

Note

- The door catch/boot lid warning symbol lights up in the instrument cluster if the boot lid is not properly closed when the ignition is switched on ⇒ page 74. ■

Unlocking the tailgate manually

The tailgate can be released manually if it will not open in the normal way.

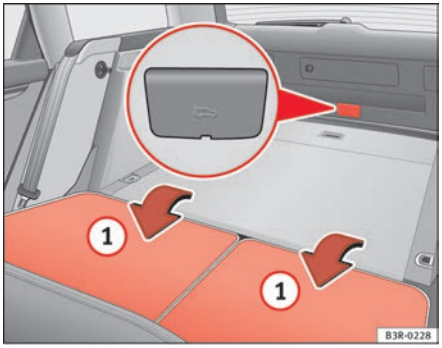

Fig. 75 Detail of the rear seats and luggage compartment: access to the emergency release mechanism

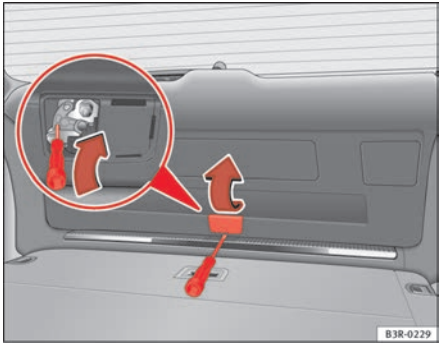

Fig. 76 Detail of the tail-gate: emergency unlocking mechanism

– Fold down both rear backrests (1) ⇒ page 104, fig. 75.

– Lean into the luggage compartment.

– Lift the cover ⇒ page 104, fig. 76 -arrow-.

– Insert the screwdriver into the opening ⇒ page 104, fig. 76 -arrow- and push it in the direction of the arrow in order to release the tailgate. ■

Childproof locks

Childproof locks on rear doors

The childproof lock prevents the rear doors from being opened from the inside.

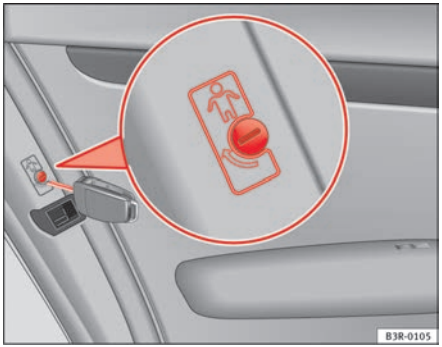

Fig. 77 Childproof lock on the rear doors

The rear doors are equipped with childproof locks. These can be operated using the ignition key. The childproof locks are only visible with the doors open.

Enabling the childproof lock

– Turn the key in the direction of the arrow ⇒ fig. 77.

Disabling the childproof lock

– Turn the key in the opposite direction of the arrow. ▶

When the childproof lock is enabled, the inside door handle will not work and the door can only be opened from the outside. ■

Remote control key

Description

The remote control key will lock and unlock the vehicle without having to insert the key in the lock.

The following functions are available:

- Locking and and unlocking the vehicle
- Unlocking the tailgate

All the indicators will flash as confirmation when the vehicle is locked or unlocked. Furthermore, the interior lights will automatically light up when the vehicle is unlocked and go out when the vehicle is locked, provided that the switches are in the courtesy light position.

The remote control transmitter and the battery are integrated into the handle of the key. The receiver is in the interior of the vehicle. The maximum range depends on different circumstances. The range is reduced when the battery starts to lose power.

The remote control incorporates a foldaway key that can be used to manually lock or unlock the vehicle, as well as to start the engine.

If the receiver has been repaired or replaced, or if a replacement key is used, the system will need re-programming by a specialist garage. Only then will you be able use the remote control again.

The remote control meets all relevant authorisation requirements and has been approved by the Federal Approvals Office for Telecommunications of the Federal Republic of Germany. All components are marked in accordance with the current legal requirements. This certification forms the basis for official approval for use in other countries.

Note

- The remote control is automatically disabled when the ignition is switched on.
- The function of the remote control may be impaired by interference from other nearby radio signals (e.g. from a mobile phone or TV transmitter) if these are in the same frequency range. ■

Locking and unlocking the vehicle

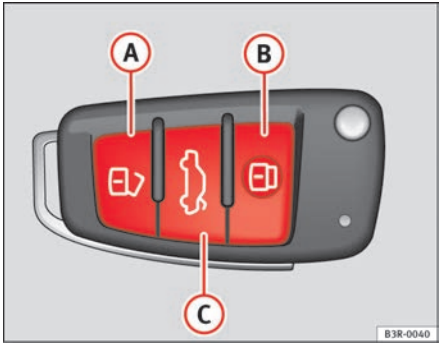

Fig. 78 Remote control key: Control buttons

Unlocking the vehicle

– Press button (A) ⇒ fig. 78 for about 1 second. ▶

Locking the vehicle

– Press button (B) for about 1 second.

Opening the tailgate

– Press button (C) and hold for at least one second.

The indicators will flash twice as confirmation when you unlock the car. The vehicle will be locked again automatically if you do not open one of the doors or the tailgate within 60 seconds after unlocking the car with button (A). This function prevents the vehicle from remaining unlocked if the unlocking button is pressed by mistake.

On vehicles with the **security central locking*** feature, you can unlock just the driver's door and the tank flap by pressing button (A) once or the whole vehicle by pressing the button twice.

The indicators flash once when the vehicle is locked to confirm that the doors and tailgate are properly locked.

Moreover, apart from unlocking the vehicle, the seat* and mirror* memory programmed in the key is activated. The driver's seat and exterior mirrors will be automatically adjusted to the positions stored in the memory.

The interior lights will automatically light up when the vehicle is unlocked and go out when the vehicle is locked, provided that the switch is in the courtesy light position.

WARNING

Do not leave anyone (especially children) in the car if it is locked from the outside and the anti-theft security system is enabled, as the doors and windows cannot then be opened from the inside. Locked doors could delay assistance in an emergency, potentially putting lives at risk.

Note

- The remote control should only be used when the doors and the tailgate are closed.
- The remote control should not be used when the vehicle is out of sight.
- The anti-theft alarm* can be accidentally triggered and the vehicle locked if you press the locking button on the remote control inside the vehicle before inserting the key in the ignition. If this should happen by mistake, press the unlock button. ■

Re-synchronising

Should the remote control fail to lock or unlock the vehicle, the system must be re-synchronised.

– If the vehicle is locked, use the key to unlock the driver's door.

– Press the unlock button on the remote control.

– Insert the key into the ignition and switch on the ignition.

– Switch off the ignition and remove the key.

– Press the unlock or the lock button. ■

Anti-theft alarm system*

Description

The system triggers an alarm if anyone attempts to break into the vehicle.

The anti-theft alarm helps to prevent the vehicle being broken into or stolen. If the system senses interference with the vehicle, it triggers an audible and visible alarm.

How is the system enabled?

The anti-theft alarm system is enabled automatically when the vehicle is locked with the remote control or by turning the key in the driver's door (if the door is closed). The system is enabled about 30 seconds after the vehicle is locked.

How is the system disabled?

The anti-theft alarm is only disabled when the vehicle is unlocked using the remote control. The vehicle will lock again automatically if none of the doors is opened within 60 seconds after pressing the remote control button.

If the vehicle is unlocked by turning the key in the driver's door, all the other doors, the tailgate and the tank flap will remain locked.

If the vehicle has been unlocked with the key in the driver's door, the key must be inserted in the ignition lock and the ignition switched on within 15 seconds of opening the door in order to disable the alarm. **The alarm will be triggered** if the ignition is **not** switched on within 15 seconds.

When does the system trigger the alarm?

The following parts of the car are monitored when the vehicle is locked:

- Engine compartment (bonnet)
- Boot
- Doors
- Tilt angle (tow-away protection)
- Ignition
- Radio (only with a factory-fitted SEAT radio)
- Interior ⇒ page 109

If any of the named areas are entered, the alarm will be triggered.

How is the alarm disabled?

The alarm can be switched off by unlocking the vehicle using the remote control, or by switching on the ignition with the key, thus “disabling” the alarm system. The alarm will also switch off when it comes to the end of its cycle.

Indicators

The indicators flash briefly when the vehicle is locked to confirm that the doors, the engine bonnet and the tailgate are properly closed and locked.

If the indicators do not flash, check the doors, the bonnet and the tailgate to make sure they are properly closed. The indicators will also flash briefly if one of the doors or the tailgate or engine bonnet are closed after the alarm system has been enabled.

LED

When the vehicle is locked, the LED on the top of the driver's door trim will flash rapidly for about 30 seconds and then continue flashing slowly. This is to indicate that the anti-theft alarm system (including the **interior monitor** and **tow-away protection**) is operative. If the LED lights up continuously for about 30 seconds when the vehicle is locked instead of flashing, this means the alarm system is not working properly.

Note

- To make sure that the alarm is fully operative when leaving the vehicle, briefly check that all the doors and windows and the sun roof* are closed.

- The alarm is triggered immediately if one of the battery cables is disconnected while the alarm system is enabled. ■

Interior monitoring*

The interior monitor triggers an alarm if it detects movement inside the vehicle.

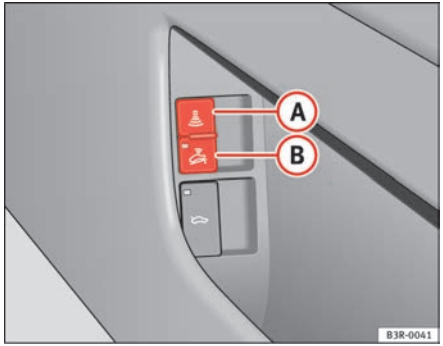

Fig. 79 Interior monitor switch

You should disable the interior monitor if there is a possibility that the alarm could be triggered, e.g. by a pet or by an object moving about inside the car ⇒ ⚠. The tow-away protection feature, which is integrated into the alarm system, should be disabled if the car is being towed or transported (e.g. by rail or ship).

Disabling the interior monitor

– Open the door and pull out the switch (A) (with the symbol) to one side of the storage compartment, in the driver's door ⇒ fig. 79.

– Then lock the vehicle.

Disabling the tow-away protection

– Open the door and pull out switch (B) (with the symbol) to one side of the storage compartment, in the driver's door ⇒ fig. 79.

– Then lock the vehicle.

The LED on switch will light up when the **interior monitor** is disabled. The LED on the top of the driver's door trim will also light up for about 3 seconds. When the vehicle is locked, the LED on the top of the driver's door trim will flash rapidly for about 3 seconds. The interior monitor is automatically enabled again the next time the vehicle is locked.

The LED on switch will light up when the **tow-away protection** function is disabled. The LED on the top of the driver's door trim will also light up for about 3 seconds. When the vehicle is locked, the LED on the top of the driver's door trim will flash rapidly for about 3 seconds. The tow-away protection is automatically enabled again the next time the vehicle is locked.

⚠ WARNING

Do not leave anyone (especially children) in the car if it is locked from the outside and the anti-theft security system is enabled, as the doors and windows cannot then be opened from the inside. Locked doors could delay assistance in an emergency, potentially putting lives at risk. ■

Electric windows

Control switches

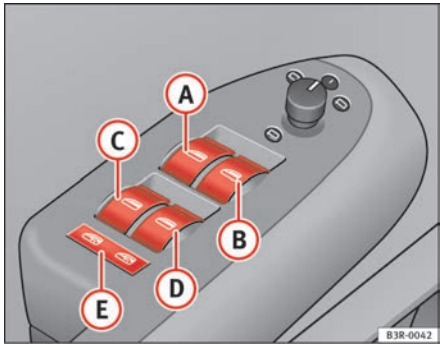

Fig. 80 Detail of the driver's door: Control switches

Switches for front windows

(A) Switch ⇒ fig. 80 for the driver's door window
(B) Switch for the front passenger's door window.

Switches for rear windows

(C) Switch for the rear left door window
(D) Switch for the rear right door window
(E) Safety switch

WARNING

- **Always take the key with you when leaving the vehicle, even if you only intend to be gone for a short time. This is particularly important if there are children in the car, as they might otherwise be able to start the engine or**

WARNING (continued)

use power-operated equipment (e.g. the electric windows), which could lead to injuries. The window switches are only disabled when the driver's door or the front passenger's door is opened.

- **Never close the windows uncarefully or in an uncontrolled manner as this may cause bruising.**
- **When locking the vehicle from the outside, make sure that nobody is inside the vehicle, as the windows cannot be opened from the inside in an emergency.** ■

Switches in the driver's door

The driver can operate all the electric windows in the vehicle.

The electric windows are controlled by **two-stage switches**:

Opening the windows

– Press the switch as far as the **first stop** and hold it until the window has moved to the desired position.

– Press the switch briefly **to the second stop** and the window will automatically open all the way.

Closing the windows

– Pull the switch as far as the **first stop** and hold it until the window has moved to the desired position.

– Pull the switch briefly **to the second stop** and the window will automatically close all the way.

Safety switch

The safety switch ⇒ page 110, fig. 80 (E) can deactivate the rear door switches. The windows can only be operated from the rear when the safety switch is pressed in.

The symbol lights up on the safety switch when the electric windows in the rear doors are disabled (switch not pressed in).

Note

The windows will work for about ten minutes after the ignition has been switched off. The window switches are only disabled when the driver's door or the front passenger's door is opened. ■

Switch on the front passenger's door and on the rear doors

Each of these doors has a switch for its own window.

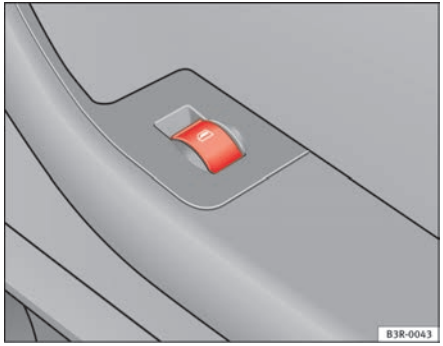

Fig. 81 Switch on front passenger's door

The electric windows are controlled by **two-stage switches**:

Opening the windows

– Press the switch as far as the **first stop** and hold it until the window has moved to the desired position.

– Press the switch briefly **to the second stop** and the window will automatically open all the way.

Closing the windows

– Pull the switch as far as the **first stop** and hold it until the window has moved to the desired position.

– Pull the switch briefly **to the second stop** and the window will automatically close all the way.

Note

The windows will work for about ten minutes after the ignition has been switched off. The window switches are only disabled when one of the front doors is opened. ■

Opening and closing the windows using the central locking function

The windows can be opened or closed simultaneously when the vehicle is unlocked or locked.

Opening the windows using the remote control

– Press and hold the unlock button on the remote control until the windows reach the desired position. ▶

Opening the windows using the ignition key

– unlock the driver's door with the key and hold the key in the unlock position until all the windows are open.

Closing the windows using the remote control

– Press and hold the lock button until all windows are closed ⇒ ⚠.

Closing the windows using the ignition key

– Lock the driver's door with the key and hold the key in the lock position until all the windows are closed ⇒ ⚠.

The windows will stop moving when you release the remote control button or turn the key back to its initial position in the door lock.

⚠ WARNING

- **Be careful when closing the windows to ensure nobody is hurt.**
- **For safety reasons, you should only use the remote control open and close functions within about 2 metres of the vehicle. To avoid injuries, always keep an eye on the windows when pressing the button to close them. The windows stop moving as soon as the button is released.** ■

Possible malfunctions

Automatic open and close function not working

The automatic open and close function will not work if the battery has been temporarily disconnected. The function can be restored as follows:

- Close the window as far as it will go by lifting and holding the window switch.
- Release the switch and then lift it again for one second. This will re-enable the automatic function. ■

Sun roof / deflector*

Description

The sliding/tilting sun roof is operated using the rotary control ⇒ page 113, fig. 82. The rotary control for sliding the roof open can be adjusted to several different settings (with click stops). This control only works when the ignition is switched on. The rotary control must be in the 0 position if you want to tilt the roof up at the rear.

The sun roof will work for about ten minutes after the ignition has been switched off. However, it is immediately disabled when one of the front doors is opened. ■

Sliding/Tilting

The sun roof will create less wind noise if it is opened in the comfort setting.

Fig. 82 Details of headliner: Rotary sun roof control

Comfort setting

– Turn the control until it engages at position (1) ⇒ fig. 82. The sun roof will now only open as far as the comfort setting which means there is less wind noise.

Opening completely

– Turn the switch to position (2) and hold it until the sun roof reaches the desired position. This position can cause more wind noise.

Tilting open

– Turn the control to position (0).

– With the control in position 0, press the control *briefly* to make the roof tilt open *all the way*.

– To open the roof as far as an *intermediate* setting, *press and hold* the control until the roof has moved to the desired position.

When you release the switch it will automatically spring back from position (2) to position (1).

The sliding sun blind in the headliner automatically opens when the sunroof is slid open. If required, it can be closed by hand when the sunroof is closed.

It is advisable to close the sun blind when the vehicle is left standing in the sun. It is important to remember to close the sunroof when parking the vehicle or if it suddenly starts raining – especially when the sun blind is extended.

For further information on the automatic close function, see ⇒ page 114. ■

Closing

Closing

– Turn the control to position (0) ⇒ fig. 82 to close the sunroof ⇒ ⚠.

Closing the sunroof from the tilt position

– Pull the specially formed rear end of the control *and hold it* until the sunroof has moved down to the desired position.

– Pull the switch *briefly* to lower the sunroof automatically to the fully closed position. If required, the sunroof can be stopped in any position by *briefly* pulling the control again ⇒ ⚠. ▶

WARNING

Take care when closing the sliding/tilting roof. There is a risk of suffering injury. For this reason, always take out the ignition key when leaving the vehicle. ■

Automatic close function

The sun roof can also be closed from outside the vehicle.

– Turn the key in the lock on the driver's door and hold it in the lock position or press the lock button on the remote control until the roof has closed all the way ⇒ ⚠.

WARNING

Take care when closing the sunroof. There is a risk of suffering injury. ■

Sunroof / deflector*

The solar cells in the roof power the climate control fan.

The solar roof is operated in the same way as the normal sliding/tilting sun roof.

The interior trim is fixed to the solar roof and cannot be opened and closed separately. ■

Closing the sunroof by overriding the safety cut-out

It is possible to override the safety cut-out to close the sunroof.

The sliding sunroof mechanism is equipped with a *safety cut-out*. If the roof should fail to close normally, it can be closed by overriding the safety cut-out.

– Turn the control to position (0) ⇒ page 113, fig. 82.

– Pull on the control switch until the roof closes.

WARNING

Take care when closing the sunroof. There is a risk of suffering injury. For this reason, always take out the ignition key when leaving the vehicle. ■

Closing the sunroof manually

The sunroof can be closed by hand if the electrical system should fail to operate.

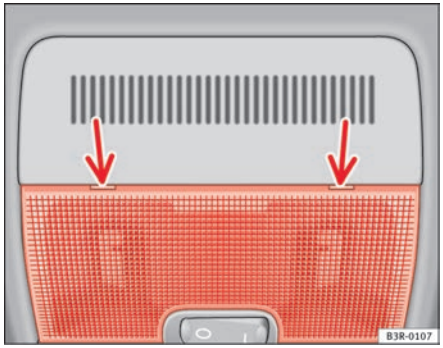

Fig. 83 Details of headliner: Points for applying screwdriver

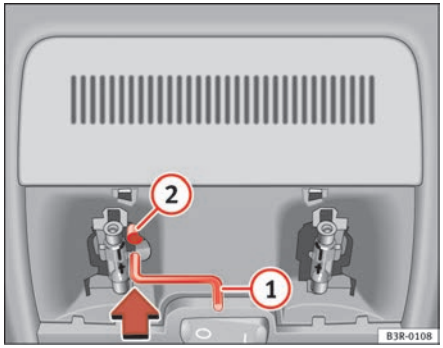

Fig. 84 Details of headliner: Crank handle for manual operations

- Carefully insert the flat end of a screwdriver (from the car's tool kit) at the rear of the glass cover on the interior light ⇒ fig. 83.
- Carefully lever off the glass cover.
- Take the crank handle from its mounting on the inside of the fuse box cover ⇒ page 256.
- Insert the crank handle (1) all the way into the hexagonal socket (2) ⇒ fig. 84.
- Hold the crank handle in position and turn it to close the sun roof.
- Reinstall the glass cover: insert the plastic lugs first and then press the cover upwards.
- Have the fault repaired.

Note

You can use the screwdriver handle to make it easier to turn the crank. Detach the handle from the screwdriver and then fit the handle onto the crank. ■

Lights and visibility

Lights

Lights: switching on and off

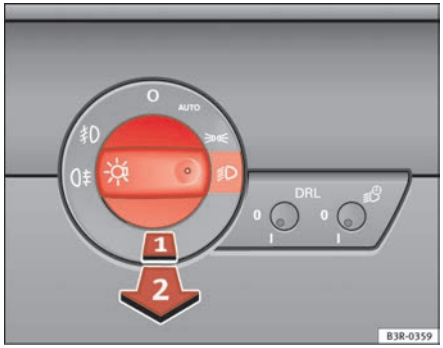

Fig. 85 Detailed view of the instrument panel: Light switch

Switching on parking lights

– Turn the light switch ⇒ fig. 85 to position ≣D.

Switching on dipped or main beam headlights (driving lights)

Dipped headlights

– Turn the lights switch to position ≣D.

Main beam headlights

– Turn the lights switch to position ≣D.

– Press the main beam lever forward ⇒ page 123.

Switching off the lights

– Turn the light switch to position O.

Daytime running lights: In vehicles for countries where daytime running lights are obligatory and in all vehicles with AFS headlights, daytime running lights are turned on or off with the ignition. Daytime running lights have main beam flashers, as usual, but not the dipped-beam headlight function

The dipped beam headlights will only work with the ignition on. The head-lights are automatically switched to side lights after the ignition has been switched off.

If the side lights or the dipped-beam headlights are turned on, the ≣D symbol will come on together with the lights switch.

Note

- If the lights are left on after the key has been taken out of the ignition lock, a buzzer sounds when the driver's door is opened.
- Observe all relevant statutory requirements when using the lighting systems described here.
- Depending on weather conditions (cold or wet), the front lights, the fog lights, the rear lights and the indicators may be temporarily misted. This does not affect the useful life of the lighting system. By switching on the lights, the area through which the beam of light is projected will quickly be demisted. However, the edges may continue to be misted up. ■

Automatic headlight switch* (sensor-controlled)

If you set the light switch to "AUTO", the headlights will switch on and switch off automatically according to the ambient light level.

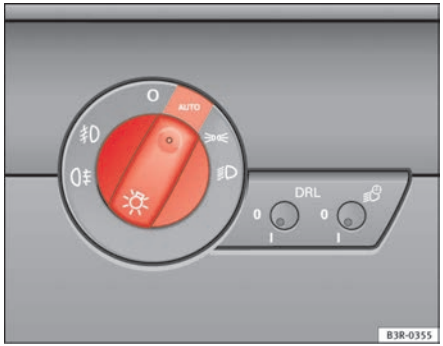

Fig. 86 Detailed view of instrument panel: Light switch

Turning on dipped-beam headlights

– Turn the light switch ⇒ fig. 86 to the **AUTO** position.

Turning off dipped-beam headlights

– Turn the light switch to position O.

The symbol on the switch lights up when the switch is in the **AUTO** position.

The dipped beams, side lights, rear lights and number plate lights come on together when the headlights are switched on automatically.

When you are using the automatic headlights switch, you can also operate the main beam headlights, however, please note the following: If you enable the main beam headlights while using the automatic headlights function **during the day** (e.g. when driving through a tunnel), but do not disable them again, only the dipped beam headlights will come on the next time the lights are automatically switched on. To be able to use the main beam headlights again, you must first pull the main beam lever back to the "off" position and then push it forward again to "on".

The side lights, headlights, fog lights and rear fog light can still be switched on manually in the normal way by using lights switch ⇒ page 116.

The mirror inside the vehicle is fitted with sensors that measure the ambient light. The dipped-beam headlights will be switched on automatically if the available light drops below the factory preset value (for instance when driving through a tunnel, etc.). The headlights switch off again automatically when the light level increases ⇒ ⚠.

WARNING

- **The automatic dipped-beam headlights are only intended to assist the driver. Automatic dipped-beam headlights do not relieve the driver of his or her responsibility to control them and turn off or turn on the lights manually according to weather or lighting conditions. The light sensors are, for example, unable to detect rain and fog - you should therefore always switch on the dipped-beam headlights manually in these conditions and when driving after dark.**
- **Observe all relevant legal requirements when using the signalling and lighting systems described here.**

Note

- If automatic headlight switching is activated, when the ignition is turned off the dipped-beam headlights are turned off, and when the key is removed from the ignition the side lights are turned off.
- If you have to attach any type of sticker on the windscreen, do not do so in front of the sensors. Doing so could prevent the automatic dipped-beam ▶

headlight or anti-dazzle function from working correctly or even from working at all.

- The warning symbol will appear on the instrument panel if a malfunction occurs ⇒ page 80.
- Observe all relevant legal requirements when using the signalling and lighting systems described here. ■

Front fog lights

The light switch can also be used to turn on the front fog lights.

Switching on the front fog lights

– Do ⇒ page 116, fig. 85 **not** turn the light switch to the symbol .

– First turn the light switch to the position or .

– Then pull the light switch out to the *first* stop (1).

The front fog light symbol next to the switch will light up when the front fog lights are on. ■

Rear fog light

The light switch can also be used to turn on the rear fog light.

– Do ⇒ page 116, fig. 85 **not** turn the light switch to the symbol .

– First turn the light switch ⇒ page 116, fig. 85 to the position or .

– Then pull out the light switch to the second stop (2) to switch on the rear fog light.

The symbols and next to the switch will light up when the rear fog light is switched on.

If you are towing a trailer or caravan equipped with a rear fog light on a vehicle with a factory-fitted **towing bracket***, only the rear fog light on the trailer or caravan will light up.

Caution

To avoid dazzling the traffic behind you, the rear fog light should only be used in accordance with legal regulations. ■

Coming home and leaving home functions*

The coming home and leaving home functions are used to light up the surroundings in the dark. The front fog lights, the rear side lights and the number plate light switch on.

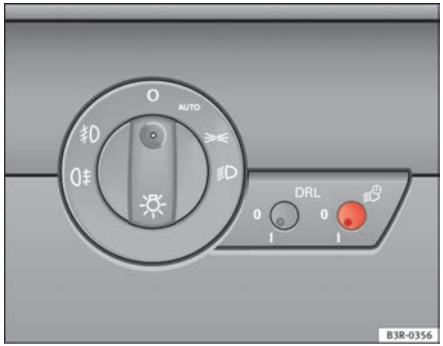

Fig. 87 Detailed view of the instrument panel: Coming home and leaving home functions

Enabling the functions

– Briefly press the knob ⇒ fig. 87 to release it from its set position.

– Turn the knob to position **1**.

– Press the knob in again to prevent the setting from being changed unintentionally.

Disabling the functions

– Briefly press the knob ⇒ fig. 87 to release it from its set position.

– Turn the knob to position **0**.

– Press the knob in again to prevent the setting from being changed unintentionally.

The coming home and leaving home functions are controlled by light sensors in the rear view mirror housing. The system will function when the following requirements are met:

- The knob is set to position **1**.
- The headlights and the ignition are switched off.
- Dark conditions; the sensors register little or no light.

Coming home

When the system is enabled and it is **dark**, the corresponding exterior lights switch on as soon as the driver's door is opened.

The exterior lights will stay on for up to a maximum of 2 minutes as long as one of the doors or the tailgate is open.

The exterior lights stay on for about 30 seconds to light up the area in front of the car after all the doors and the tailgate have been closed.

This time interval is factory-set, but you can have it changed by a specialist garage to suit your own requirements (max. setting is 60 seconds).

Leaving home

The exterior lights are switched on when the vehicle is unlocked with the button on the remote control key.

The exterior lights go out when the driver's door is opened or after 60 seconds when the vehicle locks itself again automatically ⇒ page 106.

WARNING

Before leaving the vehicle, remove the key from the ignition, as the lights will not go out if the coming home is enabled. This will lead to battery discharge and vehicle breakdown.

Note

- If you always wish to use the coming home and leaving home functions, you can leave them permanently switched on. As the system is controlled via a light sensor, it will only work in dark conditions.
- Permanent use of the coming home and leaving home functions, particularly on short journeys, will increase the load on the battery. To make sure the battery is always sufficiently charged, occasionally drive longer distances.
- If the fog lights have been switched on by the coming home and leaving home functions, they will always be switched off when you switch on the ignition.
- Observe all relevant legal requirements when using the signalling and lighting systems described here. ■

Instrument lighting

The brightness of the instrument lighting, displays and centre console lighting can be varied as required.

Fig. 88 Instrument panel lighting

– Press the (+) button to increase the brightness.

– Press the (-) button to reduce the brightness.

With the ignition switched on

The lighting of the digital displays will adjust automatically, depending on the ambient light.

With the vehicle's lights switched on

When the vehicle's lights are switched on, the brightness of the instrument lighting, displays and centre console lighting can be varied by pressing the (+) and (-) buttons. ■

Headlight range control

When the dipped beam headlights are switched on, the range of the headlights can be adjusted to suit the load being carried.

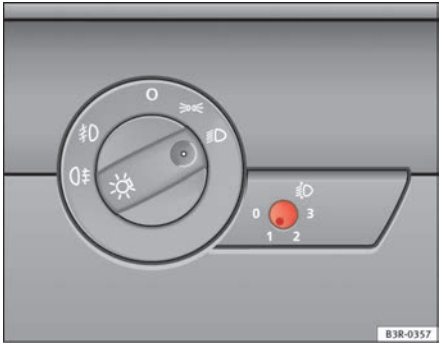

Fig. 89 Headlight range control ▶

– Briefly press the knob ⇒ page 120, fig. 89 to release it from its set position.

– Turn the knob to the required setting.

– Press the knob in again to prevent the setting from being changed unintentionally.

Settings

The settings roughly correspond to the following load conditions:

(0) Two front occupants, luggage compartment empty
(1) Full load of occupants, luggage compartment empty
(2) Full load of occupants, luggage compartment loaded
(3) Driver only, luggage compartment loaded

Caution

Always adjust the headlights to avoid dazzling oncoming traffic. Make sure you lower the headlights when the vehicle is more heavily laden. ■

Dynamic headlight range control

On vehicles with xenon gas-discharge bulbs, the headlights automatically adapt to suit the load being carried when the ignition is switched on. The headlights are also automatically adjusted when the vehicle is in motion (e.g. when accelerating and braking). ■

Daytime running lights*

The daytime running lights turn on automatically when the ignition is switched on.

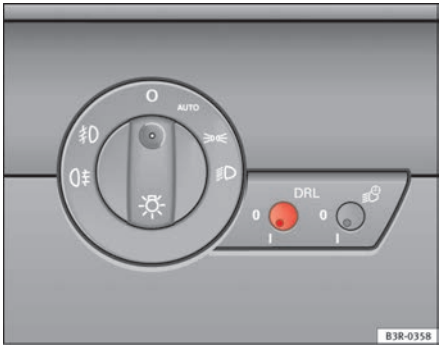

Fig. 90 Daytime running lights switch

Enabling the functions

– Briefly press the knob ⇒ fig. 90 to release it from its set position.

– Turn the knob to position **1**.

– Press the knob in again to prevent the setting from being changed unintentionally.

Disabling the functions

– Briefly press the knob ⇒ fig. 90 to release it from its set position.

– Turn the knob to position **0**. ▶

– Press the knob in again to prevent the setting from being changed unintentionally.

This button activates or deactivates the daytime running lights function. With the function activated, when the ignition is switched on the daytime running lights are turned on automatically.

Note

Please observe any relevant legal requirements which may apply in your country. ■

Self-directing AFS headlights*

When driving around bends, the headlights will light the most important areas of the road.

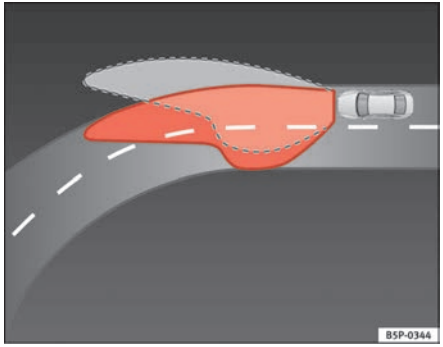

Fig. 91 Self-directing headlights when driving

The dynamic cornering light gives better illumination of the curve zone and the side of the road when driving around a bend ⇒ fig. 91. The dynamic cornering light is controlled automatically depending on the speed and the steering wheel angle. The cornering light gives better illumination of the side of the road when driving around a bend or taking a turn-off ⇒ fig. 91.

The dipped-beam headlights are regulated automatically when you drive around a bend, depending on how far you turn the steering wheel. The two main headlights move at different angles to avoid that the front of the vehicle is left completely in the dark.

Note

The system operates from a speed of about 10 km/h. ■

Hazard warning lights ⚠

The hazard warning lights are used to draw the attention of other road users to your vehicle in emergencies.

Fig. 92 Centre console: Switch for hazard warning lights ▶

– Press the switch ⚠ ⇒ page 122, fig. 92 to switch the hazard warning lights on or off.

All four indicators flash simultaneously when the hazard warning lights are switched on. The hazard warning light indication lamps ⇦ ⇨ and the turn signal indication lamp itself ⚠ flash at the same time. The hazard warning lights also work when the ignition is switched off.

In an accident in which the airbags are triggered, the hazard warning lights are switched on automatically.

Note

You should switch on the hazard warning lights to warn other road users, e.g.

- When reaching the tail end of a traffic jam
- If your vehicle breaks down or there is an emergency
- If your vehicle is being towed away or if you are towing another vehicle ■

Indicator ⇦ ⇨ and main beam headlight lever

The turn signal and main beam headlight lever also operates the parking lights and the headlight flasher.

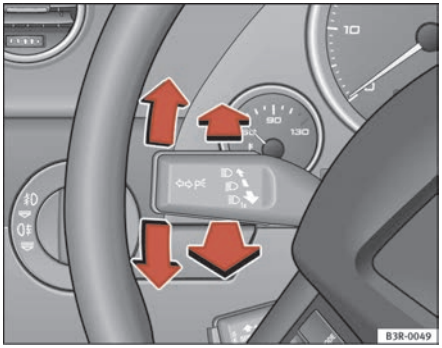

Fig. 93 Turn signal and main beam headlight lever

The turn signal and main beam headlight lever has the following functions:

Indicators ⇦ ⇨

– Move the lever all the way up to indicate right or all the way down to indicate left ⇒ fig. 93.

– Move the lever up or down just as far as the point of resistance and hold it there: the indicators flash for as long as you hold the lever (for instance when changing a lane).

– Move the lever briefly up or down as far as the point of resistance and release it to signal *briefly* (the indicators flash three times). ▶

Main beam headlights

– Press the lever forward to switch on the main beams.

– Pull the lever back towards you to switch the main beam headlights off again.

Headlight flasher

– Pull the lever towards the steering wheel to operate the flasher.

Parking light

– Switch the ignition off.

– Move the lever up or down to turn on the right or left-hand parking lights respectively.

Notes on these functions

- The *indicators* only work when the ignition is switched on. The indicator lamp or flashes in the instrument panel when the turns signals ⇒ page 65 are working.
- The indicators are cancelled automatically when the steering wheel is returned to the straight-ahead position.
- The *main beam headlights* can only be switched on if the dipped beam headlights are already on. The main beam headlight indicator lamp then comes on in the instrument panel.
- The *headlight flasher* comes on for as long as you pull the lever, even if no other lights are switched on. The main beam headlight indicator lamp then comes on in the instrument panel.
- When the *parking lights* are switched on, the headlight and the rear light on one side of the car light up with reduced intensity. The parking lights will only work with the ignition off.

Caution

Never use the main beam headlights or the headlight flasher if this would dazzle oncoming traffic. ■

Interior lights

Front interior lights and glove compartment light

The front interior light also incorporates the reading lights for the driver and passenger.

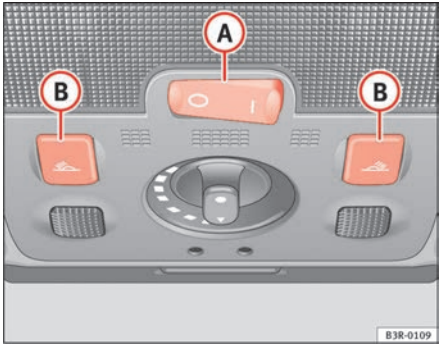

Fig. 94 Details of headliner: front interior lights

The rocker switch (A) ⇒ fig. 94 for the front interior light has the following functions: ▶

Door light position

– Move switch (A) to the centre position.

Interior light switched on

– Move switch (A) to position I.

Interior light switched off

– Move switch (A) to position O.

Front reading lights

– Press one of the switches (B) to turn the left and right reading lights on and off.

Glove compartment light

– Open the glove compartment on the front passenger's side. The glove compartment light will come on automatically if the side lights or headlights are switched on, and will go out again when the glove compartment is closed.

Footwell* and door lighting

– This is switched on when the doors are opened and off when they are closed.

If the switch is in the courtesy light position, the interior light comes on automatically when the vehicle is unlocked or the doors are opened. The light also comes on when the key is pulled out of the ignition. The light turns off about 30 seconds after closing the doors. The interior light is switched off immediately when the vehicle is locked or when the ignition is switched on.

If a door is left open, the light is switched off after about 10 minutes to prevent the battery from running flat.

The brightness of the lights is automatically adjusted by a dimmer when they are switched on. ■

Background lighting*

The background lighting illuminates a number of minor controls.

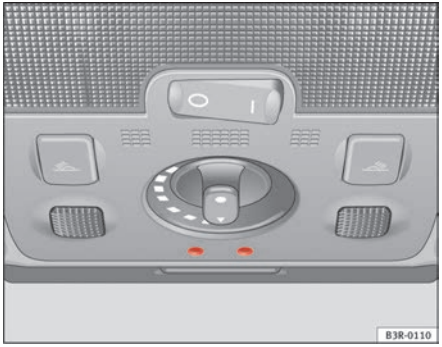

Fig. 95 Details of headliner: background lighting

The lights in the door handles come on automatically when the ignition is switched on.

The lighting above the windscreen* also comes on when the side lights or headlights are switched on. The centre console is illuminated from above.

The background lighting cannot be switched off manually. ■

Rear reading lights

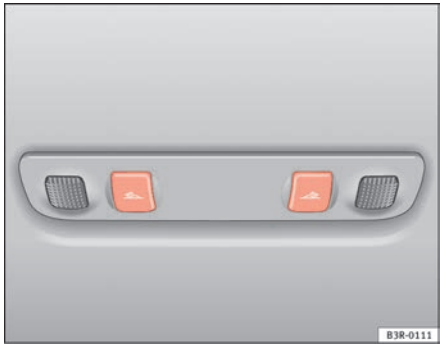

Fig. 96 Details of headliner: rear reading lights

The reading lights are switched on and off with the switches . ■

Luggage compartment lighting

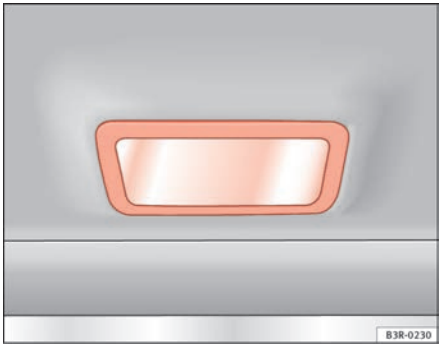

Fig. 97 Detailed view of the top of the luggage compartment: luggage compartment lighting

The light is in the upper part of the luggage compartment.

The light ⇒ fig. 97 switches on automatically when the tailgate is opened. The luggage compartment light is switched off automatically if the tailgate is left open for more than about 10 minutes. ■

Visibility

Heated rear window

The rear window heating clears the rear window of condensation.

Fig. 98 Switch for heated rear window

– Press button to switch the rear window heating on or off ⇒ fig. 98.

The rear window heating only works when the ignition is switched on. An indicator lamp in the button lights up when the rear window heater is switched on.

The heated rear window switches off automatically after about 10 minutes if the outside temperature is above 0°C.

Depending on the outside temperature, the wing mirrors are also heated while the heated rear window is turned on.

For the sake of the environment

Switch of the heated rear window as soon as the rear window has demisted. By saving electrical power you can also save fuel. ■

Sun visors

The sun visors can improve visibility and contribute to safety.

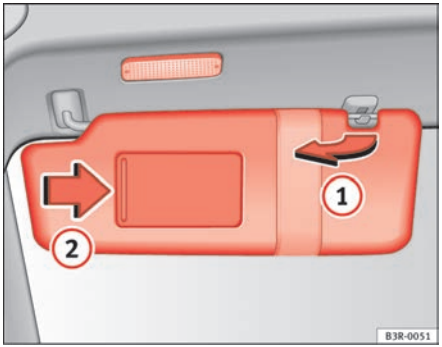

Fig. 99 Sun visor

The sun visors (1) for the driver and the front passenger can be pulled out of their mountings in the centre of the vehicle and turned towards the doors ⇒ fig. 99.

The make-up mirrors in the sun visors have covers. On opening the cover (2), the mirror light* located in the headliner is automatically switched on. The light switches itself off when the cover is closed and when the sun visor is pushed back up. ■

Sun blind*

The rear side windows are fitted with sun blinds.

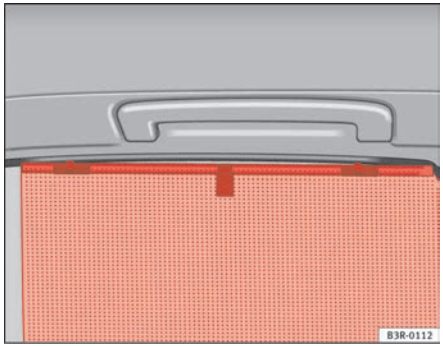

Fig. 100 Sun blind extended to cover rear side window

Sun blinds (rear side windows)

– Pull out the blind and hook it into the hooks at the top of the door frame ⇒ fig. 100. ■

Windscreen wipers

Windscreen wipers

The windscreen wiper lever controls the windscreen wipers and the automatic wash and wipe.

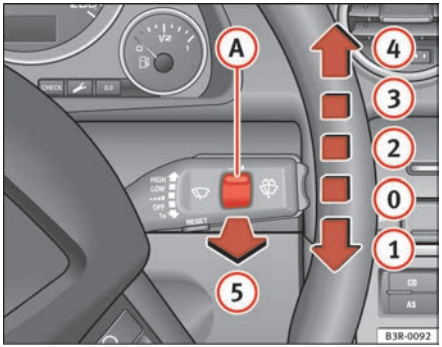

Fig. 101 Windscreen wiper lever

The windscreen wiper lever ⇒ fig. 101 has the following settings:

Brief wipe

– Move the lever down to position (1) to give the windscreen a *brief* wipe.

Intermittent wipe / Rain sensor* (enabling)

– Move the lever up to position (2).

– Move the switch (A) up or down to set the wiper intervals. ▶

– On vehicles equipped with a rain sensor*, you can move the switch (A) up and down to set the sensitivity of the rain sensor.

Slow wipe

– Move the lever up to position (3).

Continuous wipe

– Move the lever up to position (4).

Automatic wash and wipe

– Pull the lever towards the steering wheel, (5), to activate the windscreen washer.

– Release the lever. The washer will stop and the wipers will keep running for approximately 4 seconds.

Disabling the windscreen wiper

– Pull the lever to basic position (0).

General notes

The washers and wipers will work only when the ignition is switched on.

If you stop briefly, e.g. at traffic lights, the wiper speed will automatically be reduced. The rain sensor* will automatically be set to the intermittent wipe function.

The windscreen washer jets are heated when the ignition is switched on.

The wiper intervals in the intermittent wipe setting are also varied automatically according to the road speed (in addition to the manual delay setting).

When the lights are switched on you should only pull the lever briefly to wash the windscreen, otherwise the headlight washers* will also be enabled. This will use an unnecessary amount of fluid from the reservoir.

Rain sensor

The rain sensor* will only function in the intermittent wipe position. The intermittent wipe function is enabled automatically when it starts to rain.

Before you reach a road speed of 6 km/h ,you will have to enable the rain sensor manually by switching it off and back on again.

Use control (A) to set the sensitivity of the rain sensor*.

If you have selected a high sensitivity level for the rain sensor the windscreen wipers will react sooner to any moisture on the windscreen.

The wiper intervals in the intermittent wipe setting are also varied automatically according to the road speed (in addition to the sensitivity setting).

WARNING

- **For correct visibility and safe driving, the wiper must be in perfect condition ⇒ page 209. Failure to do so could result in an accident.**
- **The rain sensor* is only intended to assist the driver. The driver is still obliged to manually operate the windscreen wipers as required depending on visibility.**
- **Do not use water-repellent coatings on the windscreen. In bad visibility conditions such as light rain, low sun or when driving at night, these coatings can cause increased dazzle, which is a serious safety hazard. Such coatings can also cause the wiper blades to judder.**

Caution

- In the event of frost, check that the wiper blade has not frozen before enabling the windscreen wipers. Should the windscreen wiper system be enabled when the blade is frozen, this could damage it or even the windscreen wiper system motor.
- Make sure you switch off the windscreen wiper system (lever in position 0) before you use an automatic car wash. This will avoid inadvertent triggering of the wipers and possible damage to the wiper system.

Note

- Check that the washer fluid reservoir is full before starting a long journey. Fill the reservoir ⇒ page 228.
- Worn or dirty wiper blades can cause smearing on the glass which can also impair the effectiveness of the rain sensor*. Check the condition of windscreen wiper blades at regular intervals. ■

Rear window wiper

The windscreen wiper lever also operates the rear window wiper and the automatic wash/wipe.

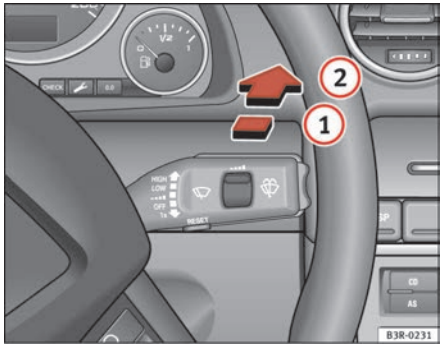

Fig. 102 Windscreen wiper lever

The rear window wiper and the automatic wash/wipe system are switched on as follows:

Intermittent wipe

– Push the windscreen wiper lever forwards until it clicks into the first position ⇒ fig. 102 (1). The rear window wiper will wipe the window approximately every 4 seconds.

Automatic wash/wipe

– Push the lever forwards to position (2). The rear window wiper will work for the time you hold the lever in this position.

– Release the lever. The rear window wiper will keep working for approximately 4 seconds.

Deactivating the interval wipe function

– Pull the lever backwards until it returns to its original position.

The rear window wiper will start working automatically if reverse gear is engaged while the windscreen wipers are switched on.

WARNING

For correct visibility and safe driving, the wiper blade must be in perfect condition ⇒ page 209. If not, there is danger of an accident.

Caution

In icy conditions, always check that the wiper blades are not frozen to the glass before using the windscreen wipers/rear window wiper. The windscreen wiper blades and even the windscreen wiper motor could be damaged if you start the windscreen wipers/rear window wiper with the blades frozen to the glass. ■

Headlight washer system

Fig. 103 Headlight with extended washer jet

With the lights switched on, operate the automatic wash and wipe ⇒ page 128, fig. 101 (5), and keep the lever pulled towards you for at least 1 second.

The headlight washer jets come out of the bumper automatically (under water pressure) ⇒ fig. 103.

Clean off stubborn dirt (insects, etc.) from the lenses at regular intervals, for instance when filling the tank.

To ensure that the system works properly in winter, keep the nozzle holders free of snow and remove any ice with a de-icer spray. ■

Rear-view mirrors

Interior rear view mirror with manual anti-dazzle setting

Normal setting

– Point the lever at the bottom of the mirror forwards.

Anti-dazzle setting for the rear view mirror

– Point the lever at the bottom of the mirror to the rear. ■

Anti-dazzle interior rear-view mirror with automatic adjustment*

The automatic anti-dazzle function can be switched on and off as desired.

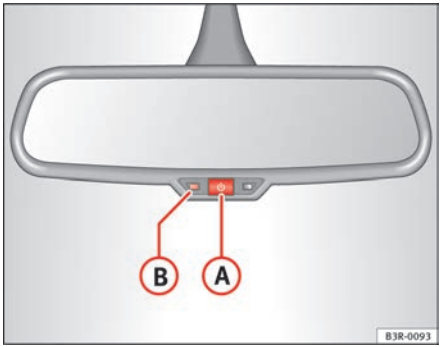

Fig. 104 Interior rear view mirror with anti-dazzle setting: Indicator lamp and on/off switch ▶

Switching off anti-dazzle function

– Press button (A) ⇒ page 131, fig. 104. Warning lamp (B) goes out:

Switching on anti-dazzle function

– Press button (A) ⇒ page 131, fig. 104. The indicator lamp (B) will light up.

Anti-dazzle function

The anti-dazzle function is activated every time the ignition is switched on. The green indicator lamp lights up in the mirror housing.

When the anti-dazzle function is enabled, the interior rear view mirror will darken *automatically* according to the amount of light it receives. The anti-dazzle function is **disabled** if:

- the interior lighting is switched on
- reverse gear is engaged

Sensors for automatic headlights*

When the light switch is set to the **AUTO** position, the dipped beam headlights are switched on and off automatically according to the ambient light level with the aid of the sensors located in the interior rear view mirror ⇒ page 117.

WARNING

Electrolyte fluid can leak from a broken mirror. This fluid can cause irritation to the skin, eyes and respiratory organs. Wash thoroughly with clean water should you come into contact with this fluid. Seek medical assistance if needed!

Caution

Electrolyte fluid leaking from a broken mirror can cause damage to plastic surfaces. Use a sponge or similar to remove the fluid as soon as possible.

Note

- The rear-view mirror's automatic anti-dazzle function* will only work properly if the sun blind* for the rear window is retracted and if there are no other objects preventing light from reaching the interior mirror.
- If you have to stick any type of sticker on the windscreen, do not do so in front of the sensors. Doing so could prevent the automatic headlight or anti-dazzle function from working correctly or even from working at all. ■

Exterior mirrors

The exterior mirrors are adjusted electrically.

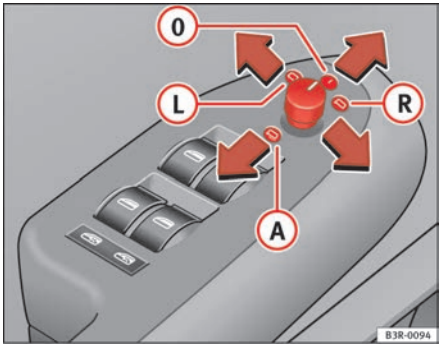

Fig. 105 Detailed view of the armrest: Adjuster knob

Adjusting the exterior mirrors

– Turn the adjuster knob to position ⇒ page 132, fig. 105 (L) (left exterior mirror) or position (R) (right exterior mirror).

– Move the knob as required to adjust the exterior mirror for a good view behind you.

Retracting both exterior mirrors

– Turn the knob to position (A).

It is advisable to fold the exterior mirrors, for example when parking or when driving through narrow spaces.

Heated mirrors

The mirrors are heated (depending on the outside temperature) when the rear window heater ⇒ page 127 is switched on.

Memory for exterior mirrors*

On vehicles with memory function for the driver's seat, the setting of the exterior mirrors is automatically stored together with the seat position ⇒ page 138.

Tilting function for exterior mirror on the passenger's side* (only if equipped with memory for exterior mirrors)

When reverse gear is engaged, the mirror surface tilts slightly downwards, provided the mirror control is switched to the exterior mirror on the passenger's side (knob in position (R) ⇒ page 132, fig. 105). This provides a better view of the kerb when parking.

The mirror returns to its original position as soon as reverse gear is disengaged and the vehicle is driven forwards at a speed above 15 km/h, or when the mirror control is turned to position (L) or to the neutral position (0).

Caution

- Rear view convex or aspheric* mirrors increase the field of vision, although objects appear smaller and further away in the mirrors. Therefore, you should not rely on these mirrors for judging the distance of vehicles behind.
- If one of the mirror housings is knocked out of position (e.g. when parking), the mirrors must first be fully retracted with the electric control. Do not readjust the mirror housing by hand, as this will interfere with the mirror adjuster function.

Note

If the electrical adjustment ever fails to operate, the mirrors can be adjusted by hand by lightly pressing the edge of the mirror glass. ■

Seats and stowage

Manual adjustment of the front seats

Seat adjuster controls

There are several seat adjustment functions for your convenience

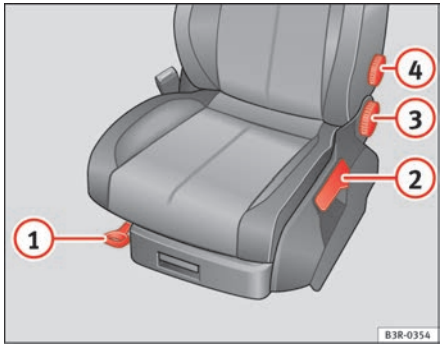

Fig. 106 Adjuster controls on driver's seat

Some of the equipment listed is only fitted on certain models or is an optional extra.

Control switches

1. Moving the seat backwards or forwards
2. Raising/lowering the seat
3. Adjusting the backrest angle
4. Adjusting lumbar support ■

Moving the seats forwards and backwards

– Lift the lever (1) ⇒ fig. 106 and move the seat to the desired position.

– Then release the lever (1) and move the seat further until the catch engages.

⚠ WARNING

The driver's seat must only be moved forwards and backwards when the vehicle is at a standstill. Failure to do so could result in an accident. ■

Adjusting the seat height*

Raising the seat

– Pull the lever (2) ⇒ fig. 106 up repeatedly until the seat is in the desired position.

Lowering the seat

– Press the lever (2) down repeatedly until the seat is in the desired position.

⚠ WARNING

- **The height of the driver's seat must not be adjusted while driving. Failure to do so could result in an accident.**

WARNING (continued)

- **Be careful when adjusting the seat height. Injuries can be caused if the height is adjusted without due care and attention.** ■

Adjusting the backrest angle

– Lean forwards to take your weight off the backrest.

– Turn the adjuster wheel (3) ⇒ page 134, fig. 106 to set the angle of the backrest as required.

WARNING

The front backrests must not be reclined for driving. Otherwise, safety belts and the airbag system might not protect as they should, with the subsequent danger of injury. ■

Adjusting lumbar support*

– Do not exert any pressure on the backrest and turn adjuster wheel (4) ⇒ page 134, fig. 106 to adjust lumbar support.

As you make the adjustments, the curvature of the cushioned area of the lumbar region becomes more or less acute. In this way, it adapts to the natural curvature of the spine. ■

Electric adjustment of front seats*

Adjusting the seat

The arrangement of the switches corresponds with the design of the seats.

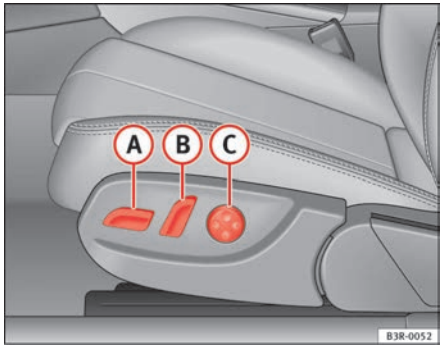

Fig. 107 Front seat: Adjuster controls

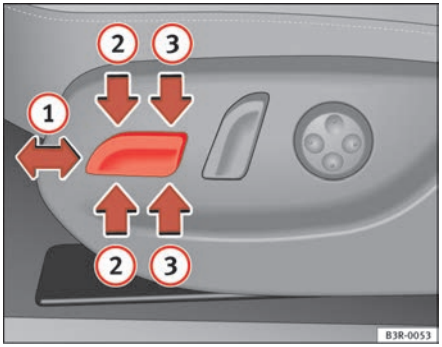

Fig. 108 Front seat: Seat adjustment switches

The adjustment switches for the seat and backrest correspond with the design of the seat. The seats can be adjusted merely by pressing the corresponding switch in the required direction.

Moving the seat forwards / backwards

– Press switch (A) ⇒ fig. 107 forwards or backwards (1) ⇒ fig. 108 ⇒ ⚠.

Raising/lowering the seat

– Press switch (A) up or down ⇒ ⚠.

Raising/lowering the front part of the seat

– Press the front of switch (A) up or down (2) ⇒ ⚠.

Raising/lowering the rear part of the seat

– Press the rear of switch (A) up or down (3) ⇒ ⚠.

Control switches

(A) Seat adjustment
(B) Backrest adjustment
(C) Lumbar support*

WARNING

- **The electrical seat adjustment also works when the ignition is off or when the key is not in the ignition. To avoid accidental injuries, never leave children unattended in the vehicle.**
- **For safety reasons, the seat must only be adjusted when the vehicle is at a standstill. Failure to do so could result in an accident.**
- **Be careful when adjusting the seat height. Injuries can be caused if the seat height is adjusted without due care and attention.** ■

Adjusting the backrest angle

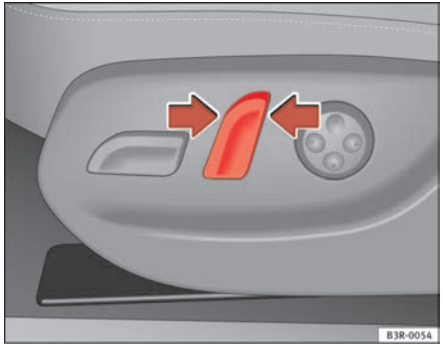

Fig. 109 Front seat: Backrest adjuster switch

– Press the button in the appropriate direction of the arrow ⇒ fig. 109 to adjust the backrest ⇒ ⚠.

WARNING

The front backrests must not be reclined for driving. Otherwise, safety belts and the airbag system might not protect as they should, with the subsequent danger of injury. ■

Lumbar support*

The lumbar support can be adjusted to fit the natural curve of the spine.

Fig. 110 Front seat: Adjuster switch for lumbar support

Adjusting the contour of lumbar support

– Press the front part of the adjuster switch ⇒ page 137, fig. 110 to increase the contour of the lumbar support.

– Press the rear part of the adjuster switch to decrease the contour of the lumbar support.

Adjusting the height of lumbar support

– Press the top part of the adjuster switch to move the lumbar support upwards.

– Press the bottom part of the adjuster switch to move the lumbar support down.

The lumbar support provides effective support for the natural curvature of the spine to give a more relaxed seating position, especially on long journeys. ■

Memory for driver's seat*

Description

The recall buttons in the driver's door can be used to store and recall up to four different positions for the driver's seat and exterior mirrors.

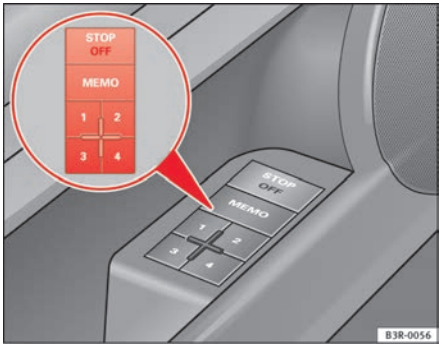

Fig. 111 Driver's door: Memory system

Memory buttons

Using the recall buttons 1, 2, 3 and 4 ⇒ fig. 111, you can store and recall the seat and exterior mirror positions for up to four different drivers.

STOP button

The seat memory will be disabled if the STOP button is in the up position (press and release). The word **OFF** will light up next to the STOP button (only visible when the lights are switched on).

The stored settings will all remain in the memory. However, the seat and the exterior mirrors can now only be adjusted using the conventional electrical ▶

adjustment. Use of the STOP button is recommended to disable the memory system when the vehicle is being driven *temporarily* by a different driver whose settings do not need to be stored in the memory.

Note

You can also use the remote control to call up the stored settings ⇒ page 140. ■

Storing settings

The STOP button must be in its down position (pressed in) before you can store the desired settings.

– Adjust the driver's seat as required ⇒ page 136.

– Adjust both exterior mirrors ⇒ page 132.

– Press and hold the MEMO button. At the same time, press one of the memory buttons for at least a second.

– Release both buttons. The setting is now stored on the selected memory button.

Any new setting selected automatically cancels the existing setting stored on the memory button. It is best to begin with memory button No. 1 for the first driver and then assign the other memory buttons to each subsequent driver.

The seat and mirror positions are stored when the car is **locked** with the remote control and are assigned to the remote control key. The exterior mirrors adjust automatically to the previous position when you **unlock** the car; the driver's seat adjusts automatically when you open the driver's door.

However, this does not delete the settings stored in memory buttons 1 to 4. These settings can be enabled at any time. ■

Enabling settings

Stored settings can be recalled using either the memory buttons or the remote control (remote control key).

Using the memory buttons

– If the driver's door is open, press the desired memory button briefly.

– If the driver's door is closed, press and hold down the appropriate memory button until the seat and exterior mirrors reach their programmed positions.

Using the remote control

– Unlock the vehicle using the remote control and open the driver's door within the next ten minutes.

The seat adjustment will have to be called up using the memory buttons if the driver's door is not opened within 10 minutes after unlocking the vehicle with the remote control.

WARNING

- **For safety reasons, the seat must only be adjusted when the vehicle is at a standstill. Failure to do so could result in an accident.**
- **In an emergency, the memory function can be stopped at any time by pressing the STOP button or by briefly pressing any of the memory buttons.** ■

Assigning remote control keys

The key must be assigned to a memory button so that the positions stored in the memory can also be recalled using the remote control key.

Assigning the remote control key to a memory button

– Using the memory button, recall the settings that are to be programmed onto the key.

– Keeping the memory button pressed down, press the unlock button on the remote control key within 10 seconds.

– Wait for about 2 seconds before releasing the memory button.

Deleting assignment of the remote control key to the memory button

– Press and hold the MEMO button and press the unlock button on the remote control key within 10 seconds.

– Wait for about 2 seconds before releasing the MEMO button.

The previous settings are automatically cancelled when the keys are re-assigned to different memory buttons. ■

Head restraints

Front head restraints

In combination with properly worn seat belts, the head restraints offer effective protection, provided they are properly adjusted to suit the height of the occupant.

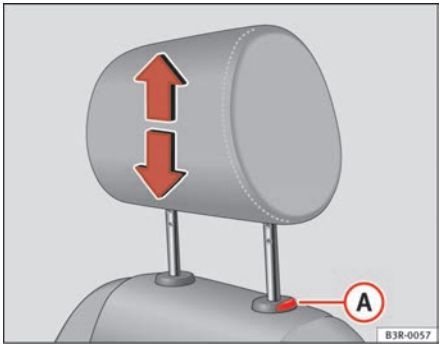

Fig. 112 Front seats: Head restraints

Raising the head restraint

– Take hold of the sides of the head restraint with both hands.

– Pull up the head restraint.

Lowering the head restraint

– Press button (A) and lower the head restraint. ▶

Removing the head restraints

– Pull up the head restraint as far as it will go.

– Press button (A) and pull out the head restraint.

Fitting the head restraint

– Insert the head restraint in its guides until it clicks into place. Press button (A) and lower the head restraint.

The height of the head restraints is adjustable. They should be set to suit the height of the occupant. In combination with the seat belts, the head restraints offer effective protection, provided they are properly adjusted.

For best protection, the top of the head restraint should be at least at eye level or higher. ■

Head restraints on the side rear seats

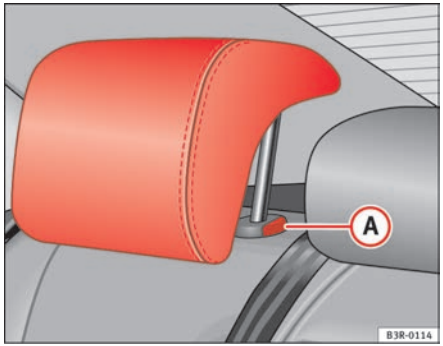

Fig. 113 Outer rear seats: Head restraints

Raising the head restraint

– Take hold of the sides of the head restraint with both hands.

– Pull up the head restraint as far as it will go.

Lowering the head restraint

– Press button (A) ⇒ fig. 113 and lower the head restraint.

Removing the head restraint

– Pull up the head restraint as far as it will go.

– Press button (A) ⇒ fig. 113 and pull out the head restraint.

Fitting the head restraint

– Insert the head restraint in its guides until it clicks into place. Press button (A) and lower the head restraint.

When the rear seats are not occupied, the head restraints should be moved to the lowest position so that they do not obstruct the driver's field of vision. ■

Central head restraint of the rear seat

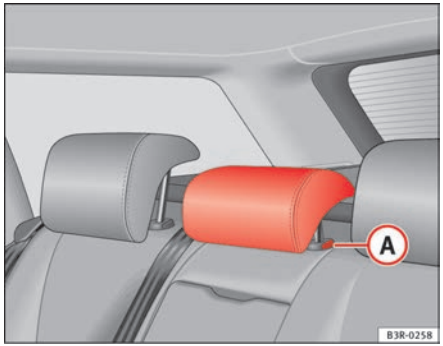

Fig. 114 Centre rear seat: Head restraints

Raising the head restraint

– Take hold of the sides of the head restraint with both hands.

– Pull up the head restraint as far as it will go.

Lowering the head restraint

– Press button (A) ⇒ fig. 114 and lower the head restraint.

Removing the head restraint

– Pull up the head restraint as far as it will go.

– Press button (A) ⇒ fig. 114 and pull out the head restraint.

Fitting the head restraint

– Insert the head restraint in its guides until it clicks into place. Press button (A) and lower the head restraint.

When the rear seats are not occupied the head restraints should be moved to the lowest position so that they do not obstruct the driver's field of vision. ■

Armrests

The armrest can be adjusted to several positions and incorporates a storage compartment.

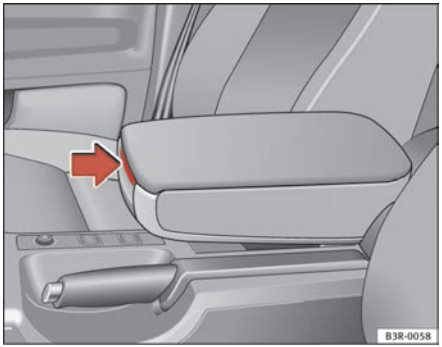

Fig. 115 Armrest between the driver's seat and front passenger's seat

Adjusting the armrest

– To adjust the position of the armrest, fold the armrest all the way down.

– Then lift the armrest gradually until it engages in the desired position.

Opening the storage compartment

– Press the release lever ⇒ fig. 115.

Please note that the armrest can restrict the driver's movements when it is lowered. The armrest should therefore be raised when driving in city traffic. ■

Luggage compartment

Loading the luggage compartment

Loads in the luggage compartment should be safely secured.

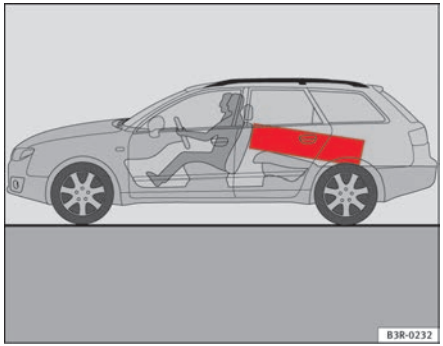

Fig. 116 Position heavy items as far forward as possible.

To maintain safe handling on the road, please observe the following points:

– Distribute the load evenly.

– Position heavy items as far forward as possible ⇒ fig. 116.

– Secure the load with the stretch net* or with non-elastic straps secured to the fastening rings ⇒ page 144.

WARNING

- **Unsecured objects in the luggage compartment can suddenly shift and cause changes in the handling of the vehicle.**
- **In an accident or a sudden manoeuvre, loose objects in the passenger compartment can be flung forward and might injure vehicle occupants.**
- **Always keep all objects in the luggage compartment and use appropriate grips to secure them, particularly in the case of heavy objects.**
- **When you transport heavy objects, always bear in mind that a change of the centre of gravity can also cause changes in vehicle handling.**
- **Please refer to the notes on ⇒ page 7.**

Caution

Make sure that no hard objects chafe against the wires of the heating element in the rear window and damage them.

Note

The tyre pressure must be adjusted according to the load. If necessary, consult the tyre pressure label on the door pillar ⇒ page 236. ■

Fastening rings

There are four fastening rings in the luggage compartment, which can be used to secure loads.

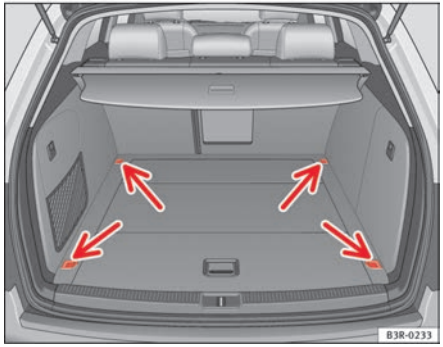

Fig. 117 Location of fastening rings in luggage compartment

– Use the fastening rings to secure the load ⇒ fig. 117 -arrows-.

– Please refer to the safety notes ⇒ page 17. ■

Luggage net*

The luggage net can be used to secure and retain light items in the luggage compartment.

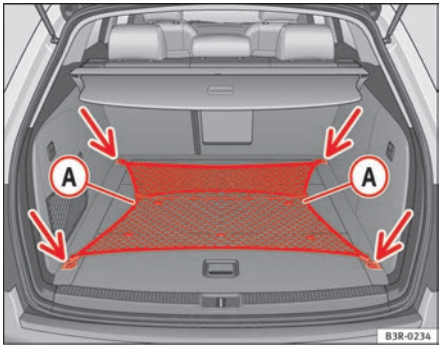

Fig. 118 Stretch net laid out

Luggage net

– Secure the luggage net to the four fastening rings -arrows- ⇒ fig. 118.

The luggage net can be attached to the fastening rings in the bottom of the luggage compartment panel.

WARNING

The luggage net should only be used to hold objects weighing up to 5 kg. Heavier objects cannot be safely secured (injury risk). ■

Retaining strap*

The retaining strap can be used to secure items of luggage to the right-hand side lining in the luggage compartment.

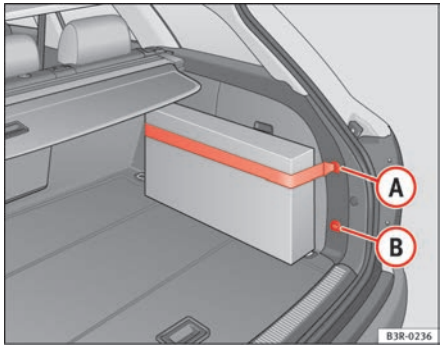

Fig. 119 Retaining strap attached to right-hand side lining

– Hook the retaining strap into housing (A) or (B) ⇒ fig. 119.

You can attach the strap to the top or bottom housing, depending on the size of the object you wish to secure.

To secure shorter objects, the retaining strap can also be attached to the centre. However, this is only possible if the strap is attached to housing (B).

WARNING

The retaining strap should only be used to hold objects weighing up to 5 kg. Heavier objects cannot be safely secured (risk of accident and/or injury). ■

Luggage compartment cover*

The cover blocks the view into the luggage compartment.

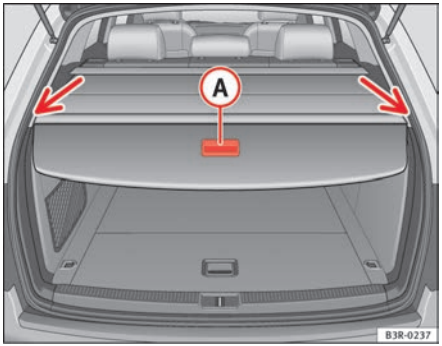

Fig. 120 Tailgate open with luggage compartment cover closed

Pulling out the luggage compartment cover

– Using handle (A) ⇒ fig. 120, pull the rolled-up cover evenly towards the rear of the vehicle.

– Insert the ends of the bar into the grooves in the left and right-hand side trim ⇒ fig. 120 -arrows-.

Retracting the luggage compartment cover

– Lift the bar out of the grooves in the side trim.

– Let the cover roll up slowly.

Removing and installing the luggage compartment cover ⇒ page 147

WARNING

The luggage compartment cover should not be used as a storage shelf. Articles placed on this cover could cause injury to vehicle occupants in an accident or if the brakes are applied suddenly. ■

Partition grille*

The partition grille prevents loose objects in the luggage compartment from being thrown forward into the passenger compartment (e.g. under sudden braking).

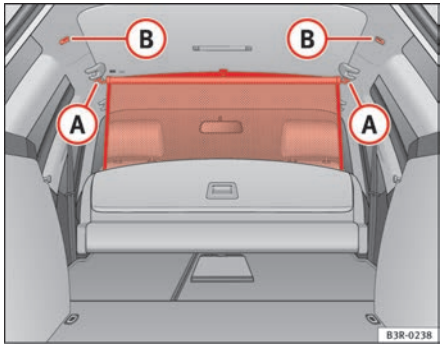

Fig. 121 Retainers for the partition grille

Pulling out and securing the partition grille

– Pull the grille up as far as it will go.

– Engage the ends of the bar in the retainers (B) ⇒ fig. 121.

Using the partition grille with the rear backrest folded down

– Fold down the rear backrests ⇒ page 149.

– Pull the grille upwards.

– Engage the ends of the bar in the retainers (A) ⇒ fig. 121.

Retracting the partition grille

– Unhook the bar from the retainers.

– Let the grille retract slowly.

Removing and installing the partition grille ⇒ page 147. ■

Removing and installing luggage compartment cover / partition grille

The luggage compartment cover / partition grille can only be removed when the rear backrests are folded forwards.

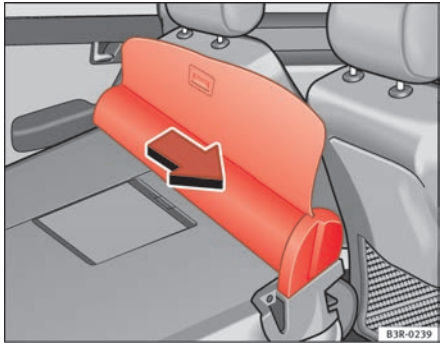

Fig. 122 Removing luggage compartment cover / partition grille

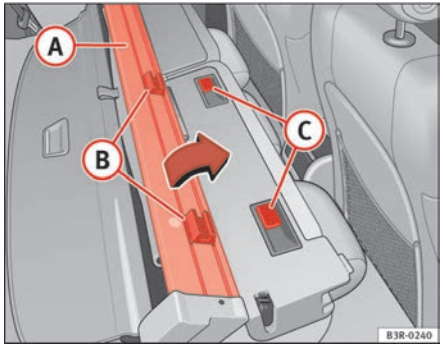

Fig. 123 Installing luggage compartment cover / partition grille

Removing luggage compartment cover / partition grille

– Open the right-hand rear door.

– Fold down the backrests ⇒ page 149.

– Pull the partition grille in the direction indicated ⇒ fig. 122 and lift it out of the retaining rails.

Installing luggage compartment cover / partition grille

– Open the right-hand rear door.

– Fold down the backrests ⇒ page 149.

– Fit the partition grille (A) on the backrest so that the retainers (B) are located next to the retaining rails (C) ⇒ fig. 123.

– Push the luggage compartment cover / partition grille towards the left-hand side of the vehicle as far as it will go. ■

Luggage compartment liner*

You can use the liner to protect the inside of the luggage compartment when carrying wet or dirty items.

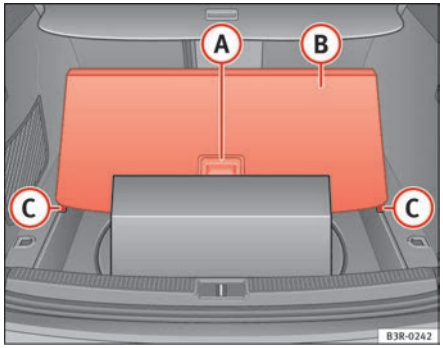

Fig. 124 Floor panel raised

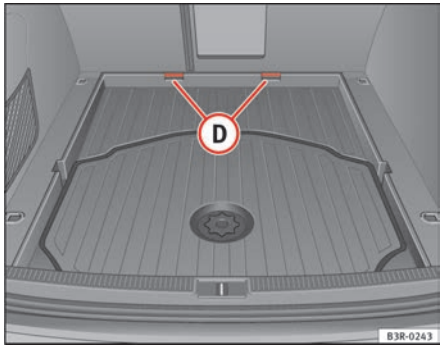

Fig. 125 Floor panel removed for increased luggage space

Folding out floor panel to upright position

– Open the tailgate.

– Take hold of handle (A) ⇒ fig. 124, lift the floor panel (B) and line up the bottom corners of the floor panel with the recesses (C).

– Put the items you are transporting onto the luggage compartment liner

Folding floor panel up against rear backrest

– Open the tailgate.

– Take hold of handle (A) ⇒ fig. 124 and fold out the floor panel as far as the rear backrest.

Removing floor panel

– Open the tailgate.

– Take hold of the handle (A) ⇒ fig. 124 and fold out the floor panel as far as the rear backrest.

– Pull the complete floor panel towards the rear of the vehicle so it comes out of the retainers (D) ⇒ fig. 125.

Small items can also be stored **under** floor panel (B) ⇒ fig. 124.

The space available for carrying items in the luggage compartment liner can be increased by folding out the floor panel or removing it completely.

Caution

When the floor panel is folded out to the upright position you should not transport items weighing more than about 7.5 kg, or items which exceed 2/3 of the height of the upright floor panel.

Note

It is advisable to secure the items by means of a strap secured to the fastening rings on the left and the right hand side. ■

Side storage compartment

The CD-ROM player for the navigation system is located in the left side storage compartment of the luggage compartment.*

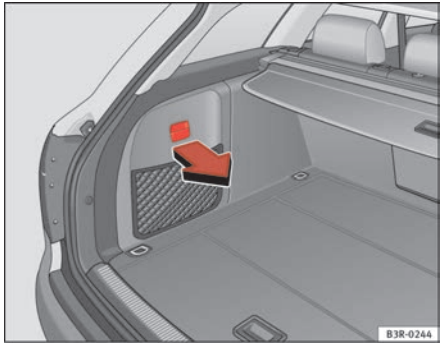

Fig. 126 Luggage compartment: Side trim with closed storage compartment

– To open the storage compartment, pull the handle forwards ⇒ fig. 126.

CD-ROM player for navigation system*

The CD-ROM player for the navigation system is located in this storage compartment in the luggage compartment. Separate operating instructions are enclosed for this system. ■

Extending the luggage compartment

The two sections of the backrest can be folded forwards either together or separately to increase the capacity of the luggage compartment.

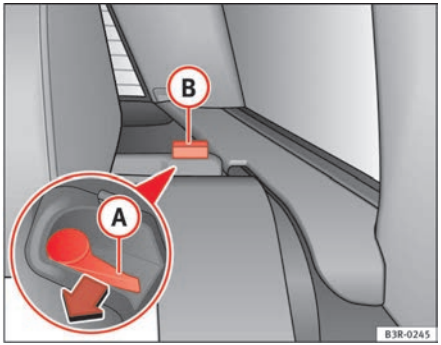

Fig. 127 Backrest release lever

Folding the backrest forwards

– Press the release lever (A) ⇒ fig. 127 in the direction indicated by the arrow.

– Fold down the backrest. ▶

Returning the backrest to its upright position

– Push the backrest up until it engages securely ⇒ ⚠. The red marking on the tab (B) should no longer be visible when the backrest is properly secured.

⚠ WARNING

- **Make sure that the rear backrest is securely locked in position so that the seat belt can provide proper protection on the centre rear seat.**
- **The rear backrest must always be securely latched so that objects stored in the luggage compartment will not fly forward during sudden braking.**

Caution

When returning the backrest to an upright position, make sure that the seat belts for the outer rear seats are in their guides, so that they cannot be caught up and damaged in the catches for the backrest. ■

Ski bag*

You can use the "ski bag" to transport skis or other extra-long objects safely inside the vehicle without soiling or damaging the upholstery.

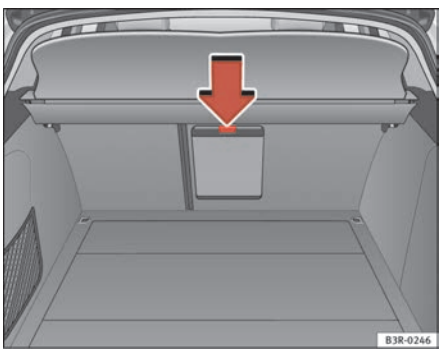

Fig. 128 Detailed view of the rear of the rear backrest: Ski bag cover

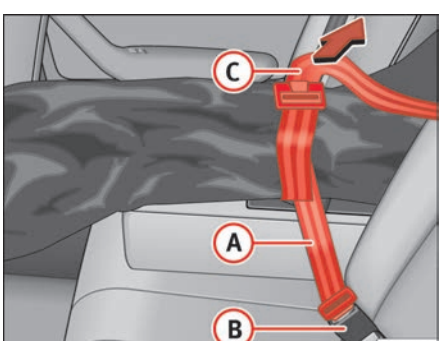

Fig. 129 Fastening the ski bag in the seatbelt buckle

Loading

– Open the tailgate.

– Press the release catch for the ski bag cover ⇒ page 150, fig. 128 -arrow- and swivel the cover downwards.

– Pull down the centre rear armrest.

– From the passenger compartment, press down the release catch for the ski bag cover and pull out the cover.

– Pull out and unfold the ski bag.

– The long items can now be loaded through the luggage compartment into the ski bag ⇒ ⚠.

Securing

– Insert the fastening belt (A) ⇒ page 150, fig. 129 of the ski bag into the centre seat belt buckle (B).

– Pull the free end of belt (C) to tighten.

Storing

– Close the cover of the load-through hatch in the luggage compartment.

– Carefully fold away the ski bag.

– Close the inside cover of the load-through hatch from the passenger compartment.

WARNING

The ski bag must be secured in place with the fastening belt after it has been loaded.

Note

Do not fold away the ski bag after use if it is still damp. ■

Roof carrier / roof rails*

Description

Additional luggage can be carried on the roof carrier.

Note the following points if you intend to carry loads on the roof:

- We recommend using the cross bars from the SEAT Genuine Accessories Program.
- These cross bars form the basic elements of a complete roof carrier system. For safety reasons, however, the corresponding additional fastenings must be fitted to carry luggage, bicycles, surfboards, skis and boats. All the components of this system can be acquired from Authorised Service Centres.

Caution

Any damage to the vehicle caused by the use of other types of roof rack or incorrect installation will not be covered by the factory warranty. The roof carrier system must therefore be installed exactly according to the instructions provided. ■

Attachment points

The roof carrier must be attached at the marked points only.

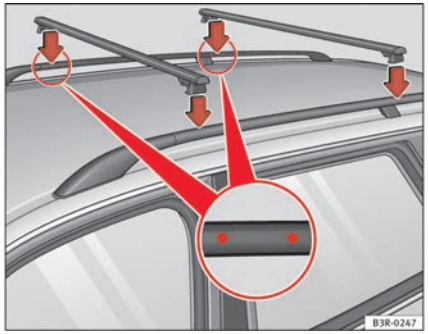

Fig. 130 Attachment points for cross bars

The cross-bars must be fitted exactly between the points marked on the roof railings ⇒ fig. 130. The markings are visible on the inside of the railings.

Caution

A roof carrier unit must not be used if the vehicle is not equipped with roof rails (basic support). ■

Roof load

Loads carried on the roof must be securely attached. The car's handling is affected whenever you carry loads on the vehicle.

The authorised load on the roof of your vehicle is **75 kg**. Use the weight of the roof carrier system and that of the load as a basis to calculate the roof load.

If less resistant systems are used, the roof carrier must not be loaded to the maximum weight permitted. If less resistant systems are used, these must only be loaded to the maximum weight permitted indicated in the assembly instructions.

WARNING

- **Loads carried on the roof must be securely attached. Failure to do so could result in an accident.**
- **Do not exceed the maximum roof load for the vehicle, the maximum axle loads or the maximum gross vehicle weight. Failure to do so could result in an accident.**
- **When transporting heavy or bulky loads on the roof, bear in mind that the car's handling is affected by the extra weight on the roof and a possible susceptibility to cross winds. Adjust your speed and driving style accordingly to avoid accidents.**

Caution

Please take extra care not to let the tailgate strike the roof load when open.

For the sake of the environment

Roof carriers are often left attached for convenience, even when they are not being used. However, the increased air resistance means that the vehicle uses more fuel. For this reason you should always take off the roof carrier when it is not in use. ■

Drink holders

Front drink holders

Fig. 131 Detailed view of instrument panel: Drink holders

– To open the drink holder, press the symbol on the drink holder lid ⇒ fig. 131

– To close the drink holder, press it in until it engages.

WARNING

- **Do not put any hot drinks in the drink holder while the vehicle is moving. You can be scalded if the hot liquid is spilt.**
- **Do not use hard china cups or glasses. These could cause injury in the event of an accident.** ■

Drinks holder in the rear armrest*

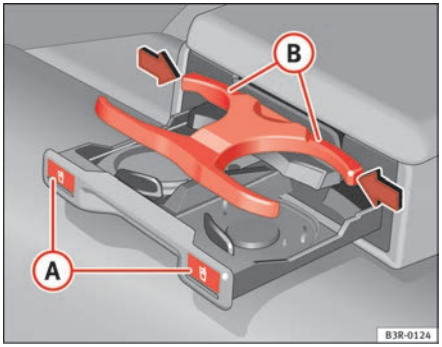

Fig. 132 Drink holder in the rear armrest

Opening the drink holder

– Press the symbol (A) ⇒ fig. 132.

Adjusting the retainer arm

– To adjust one of the retainer arms (B), release it by pressing in the direction indicated (arrow) and move it as required.

The retainer arm should be positioned against the drinks holder so that it is held securely.

One or two drinks holders can be held in the centre armrest.

WARNING

- **Do not put any hot drinks in the drink holder while the vehicle is moving. You can be scalded if the hot liquid is spilt.**

WARNING (continued)

- **Do not use hard china cups or glasses. These could cause injury in the event of an accident.** ■

Ashtray*, cigarette lighter* and power points

Front ashtray*

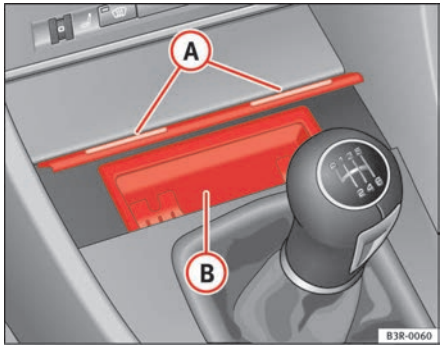

Fig. 133 Centre console: Open ashtray

Opening the ashtray

– Lightly press the front part of the ashtray (A) ⇒ fig. 133.

Removing the ashtray

– Take hold of the sides of the ashtray (B) ⇒ fig. 133 and lift it out.

Fitting the ashtray casing

– Insert the casing and press it into its mountings.

WARNING

Never put waste paper in the ashtray, as this could cause a fire. ■

Rear ashtray

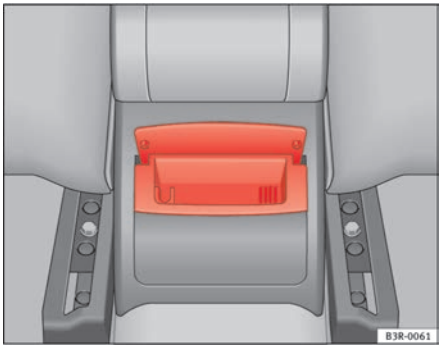

Fig. 134 Rear ashtray

Opening the ashtray

– Lift the lid.

Removing the ashtray

– Take hold of the lid ⇒ fig. 134 and lift out the ashtray. ▶

Fitting the ashtray casing

– Open the lid on the ashtray and press the casing into the mounting as far as it will go.

WARNING

Never put waste paper in the ashtray, as this could cause a fire. ■

Cigarette lighter*

The 12-volt socket for the cigarette lighter can also be used as a power source for other electrical appliances.

Fig. 135 Cigarette lighter in the centre console

Using the cigarette lighter

– Press in the cigarette lighter knob.

– Wait for the lighter to pop out slightly.

– Pull out the cigarette lighter immediately.

– Use the glowing heater element of the cigarette lighter to light your cigarette.

– Put the cigarette lighter back in its socket.

Operating the socket

– Take out the cigarette lighter.

– Insert the plug of the electrical appliance into the cigarette lighter socket.

The cigarette lighter ⇒ fig. 135 employs a standard 12-volt socket, which can also be used as a power source for electrical appliances. The appliances connected to the socket must not exceed a power rating of 100 W.

WARNING

- **Be careful when using the electric cigarette lighter. Carelessness or negligence when using the cigarette lighter can cause burns.**
- **The lighter will only work when the ignition is switched on.**
- **The electrical sockets and, therefore, any appliances connected to them will only work when the ignition is switched on.**

Caution

Always use the correct type of plugs to avoid damaging the sockets.

Note

The use of electrical appliances with the engine switched off will cause a battery discharge. ■

Power point in the luggage compartment*

Electrical equipment can be connected to the 12 Volt socket.

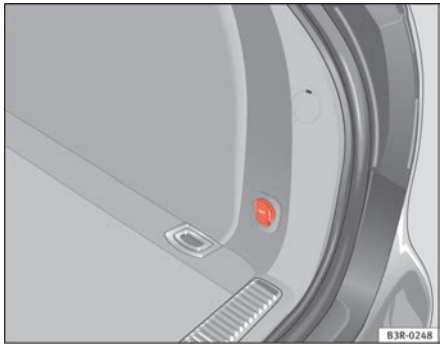

Fig. 136 Detailed view of the side trim in the luggage compartment: 12-volt socket

– Lift the power point cover ⇒ fig. 136.

– Insert the plug of the electrical appliance into the socket.

Electrical equipment can be connected to the 12-volt socket. The appliances connected to the socket must not exceed a power rating of 100 W.

WARNING

The power points, and any accessories connected to them are also functional with the ignition switched off or the key removed. To avoid the risk of injury, never leave children unsupervised in the vehicle.

Caution

Always use the correct type of plugs to avoid damaging the sockets.

Note

The use of electrical appliances with the engine switched off will cause a battery discharge. ■

Compartments

Overview

There are several storage compartments at various points in the vehicle.

Your vehicle has the following storage compartments:

First-aid kit*	
Emergency triangle*	
Glove compartment (glove compartment cooling)	⇒ page 157
Storage compartment in the centre console	
Vehicle wallet compartment*	
Compartments in the door trims	⇒ page 158
Coat hooks	⇒ page 158
Side storage compartment in luggage compartment	

Some of the compartments listed are only provided in certain models / model years or are optional extras. ■

Glove compartment

The glove compartment is equipped with a lock and a light.*

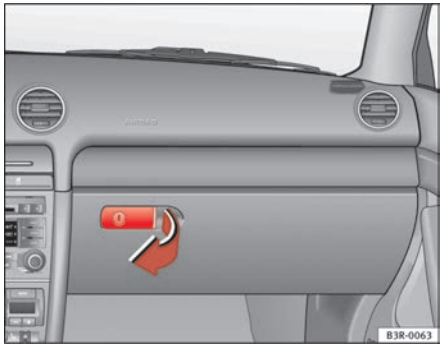

Fig. 137 Glove compartment

Opening the glove compartment

– Pull the handle on the lid in the direction indicated (arrow) ⇒ fig. 137 and open the lid.

Closing the glove compartment

– Close the lid and push it in until it engages.

If the side lights or headlights are switched on, the light in the glove compartment comes on when it is opened.

The lid has separate holders for a pen and a note pad.

WARNING

For safety reasons, the glove compartment must always be closed when the vehicle is moving. Failure to do so could result in an accident. ■

Cool box in glove compartment*

The cool box will only work when the climate control is delivering cooled air.

Fig. 138 Glove compartment with cool box open

– Open the glove compartment ⇒ fig. 137.

– Open the lid of the cool box ⇒ fig. 138.

– Turn switch (A) to switch cooling on and off. ▶

The cool box will only work when the climate control is delivering cooled air. We recommend you switch off the cool box if the climate control is delivering warm air to heat the interior.

Note

The “non-slip” mat in the cool box can be removed for cleaning. ■

Compartments in the door trim

Storage compartments are provided in the door trims.

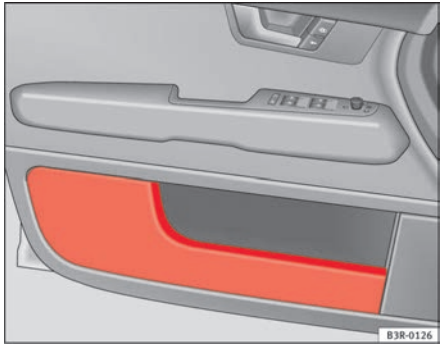

Fig. 139 Door trim with storage compartment

WARNING

The storage compartments in the door trims should only be used to store small objects. Make sure that they are stored safely inside the compartment, as they might otherwise impair the protection offered by the side airbags. ■

Coat hooks

There is a coat hook above each of the rear doors.

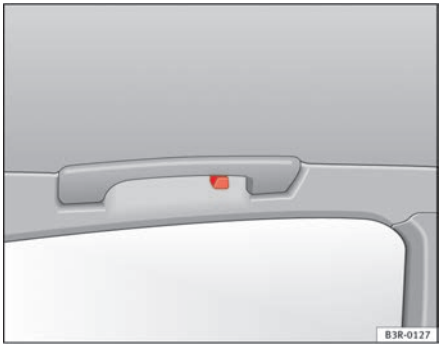

Fig. 140 Area above the rear doors: Coat hooks

WARNING

- **Please make sure that any items of clothing hanging from the coat hooks do not obstruct your view to the rear.**
- **The coat hooks should only be used for lightweight clothing. Do not leave any heavy or sharp objects in the pockets.**
- **Do not use clothes hangers to hang up the clothing, as this could interfere with the function of the head-protection airbags*.** ■

Compartments in the front seats

There is a storage compartment with a lid at the front of each front seat.

Opening

– Pull the handle to open the compartment.

Closing

– Close the lid and push it in until it engages.

Note

The compartments will hold a maximum weight of 1 kg. ■

Heating, Ventilation and Air conditioning

2C-Climatronic

Description

The climate control is designed to automatically keep the passenger compartment at the temperature you find most comfortable at all times of the year.

Recommended settings:

– Set the temperature to 22°C (71°F).

– Press the AUTO ⇒ page 162, fig. 141 button.

The following setting quickly provides a comfortable temperature inside the vehicle. We therefore recommend you do not modify the setting unless you find this temperature uncomfortable or where circumstances require as such.

The climate control provides heating and ventilation and also cools and dehumidifies the air inside the vehicle.

The climate control is fully automatic and will constantly maintain the temperature which has been set. To achieve this, the temperature of the air supplied to the interior, the blower speed (volume of air delivery) and the air distribution are regulated automatically. The system also takes solar radiation into account and, therefore, no subsequent manual readjustments are required. Therefore, **automatic mode** ⇒ page 163 should be used for the comfort of all the passengers in virtually all conditions throughout the year.

Please note the following points:

The humidity of the air is automatically reduced when the system cools the interior of the vehicle. This helps to prevent condensation on the windows.

If the humidity and temperature outside the vehicle are high, **condensation** can drip off the evaporator in the air cooling system and form a pool underneath the vehicle. This is normal and does not indicate a leak.

If the outside temperature is low, the blower normally only switches to a higher speed once the coolant has warmed up sufficiently (this does not apply to the defrost setting).

In order to achieve maximum engine power, the air conditioning compressor is temporarily switched off when pulling away from standstill with full throttle.

The compressor also switches off if the coolant temperature is excessively high to ensure adequate engine cooling under extreme loads.

Pollution filter

The pollution filter (a combined particle filter and activated charcoal filter) serves as a barrier against impurities in the outside air, including dust and pollen.

For the climate control to work with maximum efficiency, the pollution filter element must be replaced at the intervals specified in the Service Schedule.

If the vehicle is driven in areas with a high level of air pollution and the filter is no longer fully effective, it may be necessary to change the filter element more frequently.

Caution

- If you suspect that the climate control system is damaged, switch over to ECON mode to prevent further damage and have the system checked by a specialist garage.
- Repairs to the climate control require specialist knowledge and special tools. For this reason, please contact a specialist garage if the system is not working properly.

Note

- Keep the air intake slots in front of the windscreen clear of snow, ice and leaves to ensure unimpaired heating and cooling and to prevent the windows misting over.
- The air from the outlets flows through the passenger compartment and out through the slots below the rear window. Therefore, do not cover these slots with items of clothing or other objects.
- The air conditioning system operates most effectively with the windows and the sliding/tilting roof* closed. However, if the vehicle has heated up after standing in the sun for some time, the air inside can be cooled more quickly by opening the windows briefly. ■

Controls

This overview will help you become quickly familiar with the controls for the climate control.

Fig. 141 Climate control controls

The left-hand display shows the temperature selected for the left-hand side and the right-hand display the temperature for the right-hand side.

The functions can be switched on or off by briefly pressing the buttons. The diode on the buttons lights up when the function is enabled.

The grille between buttons [⊖] and [⇧] must be kept clear, as the temperature sensors are located behind the grille.

- Do not cover the grille.
- Do not clean the grille with a vacuum cleaner, as this could damage the temperature sensors located behind the grille.

Button(s)	Meaning
[AUTO]	Automatic mode
[-] [+] (left and right sides)	Temperature selection for the left and right sides
[⊞]	Defrost
[⊖]	Manual air recirculation mode
[ECON]	Switches off air cooling
[OFF]	Switches off climate control (instead of [⊖])
[⊖]	Automatic air recirculation mode (instead of [OFF])

Button(s)	Meaning
[-] [+] (centre buttons)	Adjusts blower speed
[⇧]	Air to the windows
[≡]	Air from the dashboard outlets
[⇩]	Air to the footwells

The [⇧], [≡] and [⇩] buttons (which regulate air distribution) can either be selected individually or in combination. ■

Automatic mode [AUTO]

Standard setting for all seasons.

Switching on automatic mode

– Select a temperature between +18°C (64°F) and +29°C (86°F).

– Press the [AUTO] button ⇒ page 162, fig. 141.

The automatic mode maintains a constant temperature inside the vehicle and dehumidifies the air. Air temperature, air delivery and air distribution are regulated automatically to reach the desired interior temperature as quickly as possible, and then to maintain this temperature. The system automatically compensates for any variations in the outside temperature and for the effect of direct sunlight.

The automatic temperature regulation only operates at temperature settings between +18°C and +29°C. If a temperature below +18°C is selected, **LO** appears on the display. If a temperature is selected which is higher than +29°C, the display will show **HI**. In the two extreme settings, the climate control operates continuously with maximum cooling or heating output and the temperature is not regulated automatically. The temperature is not regulated.

Note

By keeping the [AUTO] button on the driver's side pressed for several seconds, the temperature of the passenger's side can be set to the temperature of the driver's side or vice versa. The display indicates the new temperature value. ■

Selecting the temperature [-] [+]

Separate temperatures can be selected for the driver's and front passenger's side.

– Press the [-] or [+] buttons below the displays ⇒ page 162, fig. 141 until the desired temperature is selected for the driver's side or front passenger's side.

The currently selected temperature setting is shown in the display above the buttons.

By keeping the [AUTO] button on the driver's side pressed for several seconds, the temperature of the passenger's side can be set to the temperature of the driver's side or vice versa. The display indicates the new temperature value. The previous temperature setting can be restored by resetting the display on the driver's or passenger's side as required. ■

Defrosting

The windscreen and side windows are defrosted or demisted as quickly as possible.

– To enable this mode, press the ⇒ page 162, fig. 141 button.

– To disable, press the button again or select the AUTO button.

The temperature is regulated automatically. The air output is increased to maximum and most of the air comes out of outlets 1 and 2 ⇒ page 167.

The air recirculation and ECON modes are switched off when the button is pressed. ■

Air recirculation: manual enabling

The air recirculation setting prevents fumes etc. from entering the interior.

Enabling air recirculation mode

– Press the ⇒ page 162, fig. 141 ⇒ ⚠ button.

Disabling air recirculation mode

– Press the button again or

– Press the AUTO button or

– Press the button.

In this setting, the air in the vehicle is constantly recirculated. We recommend using the air recirculation mode in the following circumstances:

- When driving through a tunnel or in queues of traffic, to prevent fumes entering the interior of the vehicle.

⚠ WARNING

Do not drive for too long with the air recirculation mode enabled because, if the compressor is disconnected, the windscreen may mist up because no fresh air is entering the interior of the vehicle, with the subsequent risk of accidents. ■

ECON Mode (economy) ECON

ECON mode helps save fuel.

– To enable, press the ECON button ⇒ page 162, fig. 141.

– To disable, press the ECON button again or select the AUTO button.

Air cooling is disconnected in ECON mode. The heating and the blower are adjusted automatically. “ECON” stands for “Economy”. Disconnecting air cooling (compressor) saves on fuel.

Please note that the interior temperature must not be lower than the outside temperature in ECON mode. The blower does not cool or dehumidify the air in the interior. The windows could therefore mist up.

On diesel vehicles, the supplementary heater is switched off in ECON mode to save fuel.

Note

If the diode on the ECON button continues to light up when the ECON mode has been switched off (i.e. the climate control has been switched on) this is ▶

due to a defect in one of the climate control components. If a malfunction should occur, please contact a specialist garage. ■

Air recirculation: automatic activation*

If the outside air is polluted by diesel and petrol emissions, an air purity sensor in the vehicle will automatically switch on the air recirculation.

Fig. 142 Button for automatic air recirculation

Enabling air recirculation mode

– Press the button ⇒ fig. 142.

Disabling air recirculation mode

– Press the button again or

– Press the AUTO button or

– Press button.

The automatic air recirculation mode should normally be left switched on at all times.

The system is ready to operate approx. 30 seconds after the engine ignition key has been turned. During this initial period, fresh air is fed into the car.

If the **air purity sensor** in the air conditioning system detects a certain concentration of fumes in the outside air, the control unit will either pass the incoming air through the pollution filter or automatically switch on the air recirculation. If there is a high concentration of pollution in the outside air, the climate control automatically switches to air recirculation and the supply of air from the outside is cut off. As soon as the level of pollution decreases, air is fed into the vehicle from the outside again.

The automatic air recirculation operates for a maximum period of 12 minutes. If the windows mist up when the automatic air recirculation is on, press the button immediately.

The automatic air recirculation switches itself off under certain circumstances (for instance if or is selected). In "ECON" and at temperature of below approx. 8°C below zero, the automatic air recirculation mode is limited to 12 seconds. ■

Switching the temperature display from °C to °F and vice versa

The temperature display can be switched from °C (degrees Celsius) to °F (degrees Fahrenheit) and vice versa.

– Press and hold the button for recirculation mode and briefly press the plus button of the left-hand temperature selector ⇒ page 162, fig. 141. ■

Switching the climate control on/off

Switching the climate control off: models with an OFF button

– Press the OFF button. The climate control is switched off and the supply of air from outside the car is cut off.

Switching the climate control off: models with a button

– Keep pressing the - button for the blower until the display segment is empty. The climate control is switched off and the supply of air from outside the car is cut off.

Switching the climate control on: models with an OFF button

– Press the OFF button again, or

– Press the AUTO button or

– Press one of the air distribution buttons , , or .

Switching the climate control on: models with a button

– Press the + button for the blower, or

– Press the AUTO button or

– Press one of the air distribution buttons , , or .

The climate control also starts to operate if one of the blower or temperature selector buttons is pressed. ■

Blower speed - +

The automatically selected blower speed can be reduced or increased manually.

– Press the - and + buttons in the centre of the control panel ⇒ page 162, fig. 141 to set the blower to the desired speed (and regulate the volume of air delivery).

The climate control system automatically regulates the blower speed according to the interior temperature. However, you can also adjust the air delivery manually. The current blower setting is illustrated by a bar in the middle display (above the buttons). ■

Automatic change of passenger temperature

In order to set automatically the passenger temperature like the driver temperature, press the AUTO button on the driver's side for 2 seconds approximately. In order to set automatically the driver temperature like the passenger's temperature, press the AUTO button on the passenger's side for 2 seconds approximately. ■

Air outlets

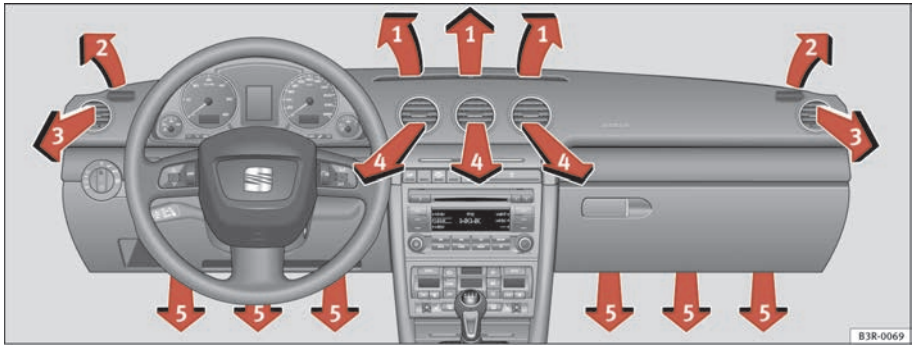

Fig. 143 Instrument panel: Location of air outlets

The air outlets ⇒ fig. 143 (3) and (4) can be operated as follows:

Outlets (3) and (4)

– The outlets can be opened and closed by turning the left thumbwheels.

– The direction of air delivery from the outlets can be varied as required using the adjuster in the centre of each outlet grille. The direction of air flow can be adjusted horizontally and vertically as desired.

The flow of air from the outlets is controlled either automatically or manually, depending on the operating mode selected. All the outlets can provide air that is either heated, unheated or cooled.

The heater outlets for the rear footwells are located under the front seats. They are controlled together with outlets (5).

Note

The cool air provided by the climate control is mainly issued from outlets (3) and (4). To ensure adequate cooling, outlets (3) and (4) should therefore never be closed completely. ■

Air distribution

The automatically-programmed air distribution can be altered manually.

The buttons [⇧], [≡] and [⇩] can be operated either separately or in combination. To return to automatically controlled air distribution, switch off the selected functions separately or press the [AUTO] button ▶

Each of the three buttons has a specific function. The numbers relate to the air outlets ⇒ page 167, fig. 143.

Air directed to windows

This setting directs all the air to outlets 1 and 2. Unlike in setting , the volume of air delivery remains the same.

Air to the driver/front passenger

All the air comes from outlets 3 and 4 in the dash panel and from the rear of the centre console.

Air to the footwells

Most of the air emerges from outlets 5 and the outlets under the front seats. Some of the air will also be issued from outlets 3 and 4.

Note

In all of the above air distribution settings, a small amount of air will still come from the other outlets. ■

Economical use of the climate control

Economical use of the climate control will help save fuel.

Engine power is reduced and fuel consumption increases when the climate control is in cooling mode. To ensure that the system is only switched on when it is really necessary, please note the following points:

– Select ECON mode if you wish to save fuel.

– Select ECON mode if you decide to open the windows or sun roof* while driving.

– If the vehicle has heated up after standing in the sun, open the windows and doors for a short time to cool the vehicle.

For the sake of the environment

By saving fuel you also reduce the amount of pollutants emitted from your vehicle. ■

Key settings

When the ignition is switched on, the climate control settings assigned to the key are selected automatically.

The climate control settings selected are automatically stored and assigned to the key in use. When the vehicle is started, the climate control automatically selects the settings assigned to the key. Hence, every driver automatically obtains his/her preferred settings without having to select them manually.

Note

Should another driver use the key and enter other settings, the previous settings will be deleted. ■

Solar-powered blower/solar roof*

If the vehicle is parked in sufficiently strong sunlight, the blower will operate in solar-powered mode when the ignition is switched off.

After the ignition is switched off, the blower is supplied with electrical power from the solar roof. Please ensure that outlets 3 and 4 are open ⇒ page 167, fig. 143 to ensure the best possible ventilation.

The blower only works when the sun roof is closed or tilted open at the rear.

If the air recirculation mode is on when you switch off the engine, the climate control will automatically switch to fresh air ventilation. ■

Supplementary heating*

Diesel vehicles are fitted with supplementary heating[2)] to raise the temperature of the interior as quickly as possible. At outdoor temperatures below +5°C and with the engine running, the supplementary heating will switch on and off automatically depending on the temperature of the coolant.

In order to save fuel, the supplementary heating can be can be switched off by briefly pressing the ECON button on the climate control. ■

Seat heating*

The surface and backrest of the front seats can be electrically heated.

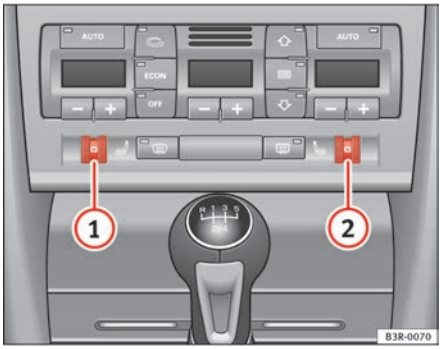

Fig. 144 Detailed view of instrument panel: Thumbwheel controls for seat heating

Turn thumbwheel (1) or (2) ⇒ fig. 144 to switch on and adjust the heating on the left or right front seats.

The heating is switched off when the thumbwheel is set to 0. The temperature settings range from 1 to 6.

Caution

To avoid damaging the heating elements of the seat heating, please do not kneel on the seat or apply sharp pressure to a single point. ■

2) For Nordic countries only.

Driving

Address

Adjusting the steering wheel position

The height and reach of the steering wheel can be adjusted as required to suit the driver.

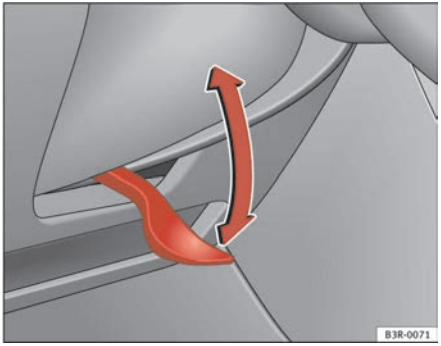

Fig. 145 Lever beneath steering column

– Push the lever ⇒ fig. 145 down ⇒ ⚠.

– Move the steering wheel to the desired position.

– Then push the lever back up against the steering column until it engages in position.

⚠ WARNING

- **Never adjust the position of the steering wheel when the vehicle is moving, as this could cause an accident.**
- **For safety reasons, the lever must always be securely engaged when the vehicle is moving, so that the position of the steering wheel cannot shift unexpectedly. Otherwise this could cause an accident.** ■

Safety

Electronic stabilisation programme (ESP)*

ESP helps make driving safer in certain situations.

Fig. 146 Detail of the centre console: ESP button

▶

The Electronic Stabilisation Program (ESP) contains the electronic differential lock (EDL) and the traction control system (TCS). The ESP function works together with the ABS. If a fault in the ABS occurs, both warning lamps light up, but if the ESP fails, only the ESP warning lamp lights up.

The ESP is started automatically when the engine is started.

The ESP switch deactivates both TCS and ESP functions. The ESP, in spite of being deactivated, will always self-connect when necessary if brakes are being used.

The TCS can be deactivated when in cases where wheel sliding is desirable.

For example:

- When driving with snow chains,
- when driving in deep snow or on loose surfaces,
- when rocking the vehicle backwards and forwards to free it from mud, for example.

Next, the button should be pressed to reactivate the TCS.

When does the warning light switch on or flash ?

- On switching the ignition on, it lights up for about two seconds to carry out a function control.
- The warning lamp will start flashing when the vehicle is moving if the ESP or the TCS is activated.
- It will light up continuously if there is a malfunction in the ESP.

WARNING

- **The electronic stabilisation programme (ESP) cannot defy the laws of physics. This should be kept in mind, particularly on slippery and wet roads and when towing a trailer.**
- **Always adapt your driving style to suit the condition of the roads and the traffic situation. Do not let the extra safety afforded by ESP tempt you into taking any risks when driving, this can cause accidents.**

WARNING (continued)

- **Please refer to the corresponding warning notes on ESP in ⇒ page 183, "Intelligent technology".** ■

Ignition lock

Ignition key positions

The ignition key is used to start and stop the engine.

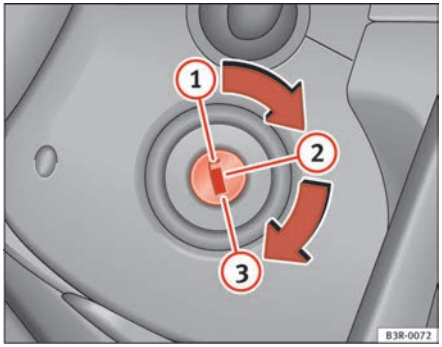

Fig. 147 Ignition key positions

Position (1)

The ignition key is inserted in this position. To **engage the steering wheel lock**, take out the key and turn the wheel until you hear the pin engage. You should always engage the steering lock when you leave the vehicle. This will help to deter thefts ⇒ ⚠.

Switching on the ignition/pre-heating glow plugs (2)

If the key is difficult to turn in the lock, move the steering wheel (to take the load off the steering lock mechanism) until the key turns freely. In the case of vehicles with a diesel engine, the key is turned to this position to preheat the glow plugs.

Starting the engine (3)

The engine is started in this position. Electrical components with a high power consumption are switched off temporarily.

After the engine has started, the ignition key returns to position (2) by itself.

The ignition key has to be turned back to position (1) before re-starting the engine. The **starter inhibitor** in the ignition lock prevents the starter motor from engaging when the engine is running, as this could cause damage.

Switching off the ignition (1)

Turn the ignition key to this position.

WARNING

- **Never remove the ignition key until the vehicle is stationary! Otherwise the steering lock could engage suddenly, which could cause an accident.**
- **Always take the key with you when leaving the vehicle, even if you only intend to be gone for a short time. This is particularly important if there are children in the car, as they might otherwise be able to start the engine or use power-operated equipment (e.g. the electric windows), which could lead to injuries.**

Note

- If the battery has been disconnected and then reconnected, it will be necessary to leave the key in position (2) for about 5 seconds before starting the engine. ■

Starting and stopping the engine

Starting the engine

The engine can only be started with an original SEAT key.

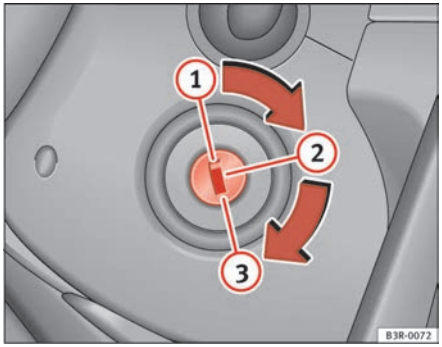

Fig. 148 Ignition key positions

Vehicles with a petrol engine:

– Use the foot brake.

– Manual gearbox: Push the clutch pedal all the way down.

– Move the gear lever into the neutral position ⇒ ⚠.

– Turn the ignition key to position (3) without pressing the accelerator.

– Release the ignition key as soon as the engine starts (the starter motor must not be allowed to run on with the engine). ▶

Vehicles with a diesel engine:

– Use the foot brake.

– Manual gearbox: Push the clutch pedal all the way down.

– Move the gear lever into the neutral position ⇒ ⚠.

– Turn the ignition key to position (2). The pre-heating indicator light ᗡᗡ comes on while the glow plugs are preheating.

– When the indicator light ᗡᗡ goes out, turn the ignition key to position (3). Do not press the accelerator.

– Release the ignition key as soon as the engine starts (the starter motor must not be allowed to run on with the engine).

When starting a very cold engine, it may be a little noisy for the first few seconds until oil pressure has built up in the hydraulic valve compensators. This is quite normal, and no cause for concern.

If the engine fails to start straight-away, switch off the starter after about 10 seconds and try again after about half a minute.

Glow plug system*

To assist starting at low temperatures, **diesel engines** are equipped with a glow plug preheating system. The preheating time depends on the coolant temperature and the outside temperature. Start the engine *as soon as* the glow plug indicator light ᗡᗡ goes out.

When the engine is warm or at outside temperatures above +8°C, the glow plug indicator light will only come on for about one second. This means that the engine can be started *immediately*.

If the engine will not start...

- ⇒ page 279
- ⇒ page 282
- ⇒ page 216, “Refuelling”

WARNING

Never run the engine in confined spaces, as the exhaust gases are poisonous.

Caution

Avoid high engine speeds, full throttle and extreme load conditions until the engine has reached its normal operating temperature, otherwise this can damage the engine.

For the sake of the environment

Do not warm up the engine by running the engine with the vehicle stationary. Start immediately. This will help avoid unnecessary exhaust emissions. ■

Stopping the engine

– Turn the ignition key to position (1) ⇒ page 172, fig. 148.

WARNING

- **Never switch the engine off until the vehicle is stationary.**
- **The brake servo and the power steering system work only when the engine is running. You need more strength to steer and brake the vehicle when the engine is switched off. Given that you will be unable to steer and brake as usual, this could lead to a risk of accidents and injuries.**

Caution

If the engine has been running hard for a long time, there is a risk of heat building up in the engine compartment after the engine has been switched off; this could cause engine damage. Therefore, you should idle the engine for approx. 2 minutes before you switch it off.

Note

After the engine is switched off the radiator fan may run on for up to 10 minutes, even if the ignition is switched off. It may also start running again after some time if the coolant temperature rises due to a build-up of heat under the bonnet, or if the engine is already warm and the engine compartment is heated up further by direct sunlight. ■

Handbrake

Handbrake

The handbrake should be applied firmly to prevent the vehicle from accidentally rolling away.

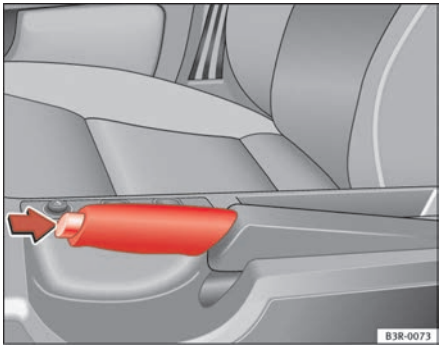

Fig. 149 Detail of the centre console: Handbrake applied

Applying the handbrake

– Pull the handbrake lever up all the way.

Releasing the handbrake

– Pull the lever up slightly and *at the same time* press in the release button ⇒ fig. 149 -arrow-.

– Keep the release button pressed and push the lever all the way down ⇒ ⚠. ▶

If you drive by mistake with the handbrake still applied, you will hear a warning buzzer and the display will show the message:

Handbrake applied

The handbrake warning is enabled after driving for 3 seconds at a speed above 5 km/h.

The handbrake warning lamp (!) lights up when the handbrake is applied with the ignition on.

WARNING

Please note that the handbrake should be released all the way. If it is only partially released, this will cause rear brakes overheating, which can impair the function of the brake system and could lead to an accident.

Caution

After the vehicle has been stopped, always apply the hand brake and engage a gear. ■

Parking

The following points will ensure there is no risk of the car rolling away accidentally after it is parked.

– Use the foot brake to stop the vehicle.

– Apply handbrake firmly.

– Switch the engine off.

– Engage first gear ⇒ ⚠.

When parking on slopes:

Turn the steering wheel so that the, if the vehicle moves, it will do so towards the curb.

WARNING

- **Do not leave anyone (especially children) in the vehicle when it is locked. Locked doors could delay assistance in an emergency, potentially putting lives at risk.**
- **Never leave children unsupervised in the vehicle. They could release e.g. the handbrake or gear lever, moving the vehicle and causing an accident.** ■

Parking aid

General notes

Various systems are available to help you when parking or manoeuvring in tight spaces, depending on the equipment fitted on your vehicle.

The **SEAT parking system** gives an acoustic warning if there are any obstacles *behind* your car ⇒ page 176.

When you are parking, **SEAT parking system plus** warns you acoustically and optically about obstacles in front of and behind the vehicle ⇒ page 176.

Note

To ensure the acoustic parking aid works properly, the sensors must be kept clean and free of snow and ice. ■

SEAT parking system*

The SEAT parking system is an acoustic parking aid.

Sensors are located in the rear bumper. When the sensors detect an obstacle, you are alerted by acoustic signals (beeps). The measuring range of the sensors starts at about:

Rear	Side	0.60 m
	Centre	1.60 m

The acoustic signals sound with increasing frequency as you approach the obstacle. When the vehicle is less than approx. 0.30 m away from the obstacle, the warning tone will sound continuously. Do not drive on!

The volume of the warning beeps will be gradually reduced after about 4 seconds if the vehicle remains at a constant distance from a detected obstacle (it will not be reduced if the obstacle is closer than 0.30 m).

The parking aid is switched on automatically when reverse gear is engaged. You will hear a brief acknowledgement tone.

WARNING

- **The parking aid is not a replacement for driver awareness. The driver is personally responsible for safe parking and other manoeuvres.**
- **The sensors have blind spots in which obstacles are not registered. Always look out for small children and animals because the system will not always detect them. Always pay attention when reversing to avoid accidents.**
- **Always keep a close watch on the area around the vehicle and make full use of the rear-view mirrors.**

Caution

Please note that low obstacles detected by the system may no longer be registered by the sensors as the car moves closer, so the system will not give any further warning. Certain kinds of obstacles (such as wire fences, chains, thin painted posts or trailer draw bars, etc) may not always be detected by the system, so take care not to damage the vehicle in such cases.

Note

- Please refer to the notes on towing ⇒ page 177. ■

SEAT parking system plus*

The SEAT parking system plus is an acoustic parking aid.

Sensors are located in the front and rear bumpers. When the sensors detect an obstacle, you are alerted by acoustic signals (beeps). The measuring range of the sensors starts at about:

Front	Side	0.90 m
	Centre	1.20 m
Rear	Side	0.60 m
	Centre	1.60 m

The acoustic signals sound with increasing frequency as you approach the obstacle. When the vehicle is less than approx. 0.30 m away from the obstacle the warning tone will sound continuously. Stop moving immediately!

The volume of the warning beeps will be gradually reduced after about 4 seconds if the vehicle remains at a constant distance from a detected obstacle (it will not be reduced if the obstacle is closer than 0.30 m). ■

Enabling/Disabling

Fig. 150 Centre console: switch for parking aid

Enabling

– Engage reverse gear or

– Press the button P⊻ on the central console ⇒ fig. 150 or on the gear selector gate. You will hear a brief acknowledgement tone and the LED on the switch will light up.

Disabling

– Drive forwards faster than 10 km/h, or

– Press the button P⊻ or

– disconnect the on button or

– go out of reverse gear.

WARNING

- **The parking aid is not a replacement for driver awareness. The driver is personally responsible for safe parking and other manoeuvres.**
- **The sensors have blind spots in which obstacles are not registered. Always look out for small children and animals because the system will not always detect them. Always pay attention when reversing to avoid accidents.**
- **Always keep a close eye on the area around the vehicle and make full use of the rear-view mirrors.**

Caution

Please note that low obstacles detected by the system may no longer be registered by the sensors as the car moves closer, so the system will not give any further warning. Certain kinds of obstacles (such as wire fences, chains, thin painted posts or trailer draw bars, etc) may not always be detected by the system, so take care not to damage the vehicle in such cases.

Note

- Please refer to the notes on towing ⇒ page 177.
- There is a slight delay in the picture display. ■

Towing bracket*

In towing mode, the rear parking sensors are not enabled when you select reverse gear or press the switch P⊻. This function may not be guaranteed on towing brackets that are not factory fitted. This results in the following restrictions: ▶

SEAT parking system*

There is no distance warning.

SEAT parking system plus*

There is no rear distance warning. The system will still give a warning when obstacles are detected while driving forwards. ■

Fault messages*

If you hear a long beep for a few seconds and the LED on the switch P* starts flashing when you switch on the parking aid, a system fault has occurred. Please have the fault corrected by a Dealer or specialist garage.

Note

If the fault is not corrected before you switch off the ignition, it will only be indicated by the flashing LED on the switch P* the next time you switch on the parking aid. ■

Cruise Control System (CCS)

Introduction

The cruise control system allows you to maintain a constant speed.

Using this equipment, any speed over 30 km/h can be kept constant up to the power output of the engine. This is subject to power output and braking ability of the engine. This helps to reduce fatigue, especially on long journeys.

The indicator light in the instrument panel lights up when the cruise control system is operating.

WARNING

For safety reasons, the cruise control system should not be used in dense traffic or poor road conditions (such as slippery surfaces, heavy rain, loose grit or gravel), as this could cause an accident.

Caution

On vehicles with a manual gearbox: do not go into neutral if the device is enabled without previously releasing the clutch, as the engine will increase its revs and, under certain conditions, could break down.

Note

The cruise control cannot maintain a constant speed when travelling down steep hills. The vehicle tends to accelerate under its own weight. Change down to a lower gear in good time or use the foot brake to slow the vehicle. ■

Setting speed

The desired cruising speed needs to be stored in the memory.

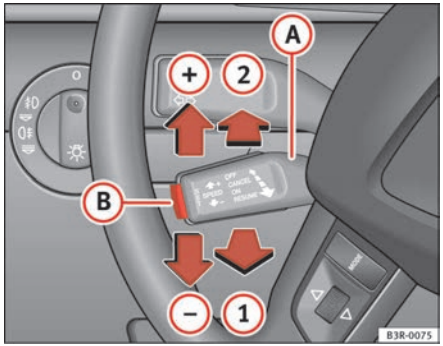

Fig. 151 Controls for the cruise control system

– Drive at the desired speed.

– Pull the lever (A) to position ⇒ fig. 151 (1) to enable the system.

– Briefly press button (B).

When button (B) is released, the current speed is stored in the memory and the vehicle will then maintain this speed. ■

Adjusting stored speed

The desired cruising speed can be adjusted up or down as required.

Acceleration

– Move the lever (A) up towards ⇒ fig. 151 (+).

– Release the lever to store the current cruising speed.

Decelerating

– Move the lever (A) down towards ⇒ fig. 151 (-).

– Release the lever to store the current cruising speed.

Pressing lever (A) briefly

– You can increase the set speed in steps of 2 km/h by briefly pressing the lever (A) up towards ⇒ fig. 151 (+).

– You can decrease the set speed in steps of 2 km/h by briefly pressing the lever (A) down towards ⇒ fig. 151 (-).

You can also use the accelerator pedal momentarily to increase speed. The previously programmed speed will be automatically resumed when the accelerator pedal is released.

However, if the vehicle exceeds the programmed speed by more than 10 km/h for more than 5 minutes, the programmed speed will be deleted. You will then need to enter the speed again. ■

Disabling cruise control temporarily

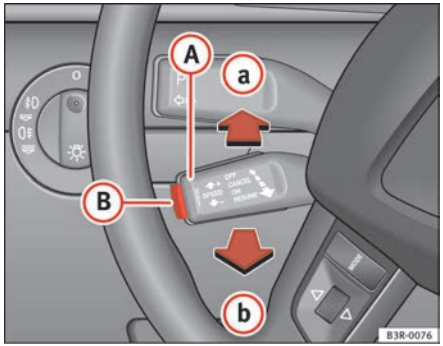

Fig. 152 Controls for the cruise control system

- Press the brake pedal or
- the clutch or
- press the lever (A) ⇒ fig. 152 to position (a) (click stop not engaged).
- Any intervention of the TCS or the ESP will switch off the cruise control.

The speed stored at this point remains in the memory if the system is only temporarily deactivated.

To resume the programmed cruising speed, release the clutch or brake pedal and pull the lever (A) to position (b).

If no speed was stored when the system was temporarily disabled, a new speed can be set as follows: drive at the desired cruising speed and briefly press button ⇒ page 179, fig. 151 (B) (SET).

WARNING

Retrieve the programmed speed only if this is not excessive for the current traffic conditions. Failure to do so could result in an accident. ■

Disabling the cruise control

While driving

- Move lever (A) ⇒ page 179, fig. 151 to position (2) (click stop engaged).

While the vehicle is stationary

- Switch the ignition off. ■

Manual gearbox

Driving a car with a manual gearbox

Fig. 153 Detail of the centre console: gear shift pattern of a 6-speed manual gearbox

Engaging the reverse gear

– The vehicle should be stationary with the engine idling. Press the clutch down thoroughly.

– Place the gear lever into neutral and push the lever downwards.

– Slide the gear lever to the left, and then into the reverse position shown on the gear stick.

The reverse gear can only be engaged when the vehicle is stationary. When the engine is running and before engaging this gear, wait about 6 seconds with the clutch pressed down thoroughly in order to protect the gearbox.

The reverse lights light up when the reverse gear is selected and the ignition is on.

WARNING

- **When the engine is running, the vehicle will start to move as soon as a gear is engaged and the clutch released.**
- **Never select the reverse gear when the vehicle is in motion. Risk of accident.**

Note

- Do not rest your hand on the gear lever while driving. The pressure of your hand could cause premature wear on the selector forks in the gearbox.
- When changing gear, you should always depress the clutch fully to avoid unnecessary wear and damage.
- Do not hold the car “on the clutch” uphills. This causes premature wear and damage to the clutch. ■

Practical tips

Intelligent technology

Electronic stabilisation programme (ESP)

General notes

The electronic stabilisation programme increases the vehicle's stability on the road.

Fig. 154 Centre console with ESP switch

The ESP is designed to increase the degree of control in situations where the car approaches the limits of adhesion, especially when accelerating and cornering. It reduces the risk of skidding and improves stability in all road conditions. The system is active across the entire speed range.

The anti-lock brake system (ABS), the electronic differential lock (EDL) and the traction control system (TCS) are all integrated into the electronic stabilisation programme.

How it works

The ESP control unit processes data from the three integrated systems. It also processes additional inputs provided by other high-precision sensors. These register the vehicle's rotation about the vertical axis (yaw rate), lateral acceleration, brake pressure and steering wheel angle.

The system uses the steering wheel angle and road speed to calculate the changes of direction desired by the driver, and constantly compares them with the actual behaviour of the vehicle. If the desired course is not being maintained (for instance, if the car is starting to skid), then the ESP compensates automatically by braking the appropriate wheel.

The forces acting on the braked wheel bring the car back to a stable condition. If the vehicle *over* swerves (tendency of the rear to leave the road), the brakes will act on the front wheel facing the outside of the bend. If the vehicle *under* swerves (tendency to leave the bend), the braking force is applied to the rear wheel facing the inside of the bend.

The ESP works in conjunction with the ABS ⇒ page 184. If a malfunction should occur in the ABS, the ESP will also be out of action.

Disabling

The ESP is enabled automatically when the engine is started and performs a self-test routine. ▶

If required, the ESP can also be enabled and disabled manually by briefly pressing the ESP switch ⇒ page 183, fig. 154. The ESP warning lamp lights up when the system is switched off, see ⇒ page 68.

In general, the ESP should be left switched on at all times. In particular circumstances where a certain amount of wheel slip is desirable, it may be advisable to switch off the ESP. Examples:

- when driving with snow chains
- when driving in deep snow or on loose surfaces
- when rocking the car backwards and forwards to free it.

The ESP should be switched on again afterwards as soon as possible.

WARNING

The ESP is not able to overcome the physical limits of adhesion. Even with ESP, you should always adjust your speed to suit the conditions. Please bear this in mind, especially on wet or slippery road surfaces. Do not let the extra safety features tempt you into taking any risks when driving. Failure to do so could result in an accident. ■

Anti-lock brake system (ABS)

ABS prevents the wheels from locking up under braking.

The anti-lock brake system (ABS) is an important part of the car's active safety system. However, the ABS will not necessarily guarantee shorter *stopping distances* in all conditions. For instance, on loose gravel or fresh snow on top of an icy surface (conditions which anyway require extreme care and reduced speed), the stopping distance with ABS may even be slightly *longer*.

How the ABS works

The system runs an automatic self-check when the car reaches a road speed of about 6 km/h. This may be accompanied by a noise from the ABS pump.

When one of the wheels is turning very slowly in relation to the road speed and is close to locking up, the system will reduce the pressure in the brake line to this wheel. The driver is made aware of this adjustment process by a **vibration of the brake pedal** and an audible noise. This is a deliberate warning to the driver that one or more of the wheels is tending to lock up and the ABS control function has intervened. In this situation it is important to keep the brake pedal fully depressed so the ABS can regulate the brake application, but do not “pump” the brake pedal.

WARNING

The grip provided by ABS is still subject to the physical limits of adhesion. Always bear this in mind, especially on wet or slippery roads. If you notice that the ABS is working (to counteract locked wheels under braking), you should reduce speed immediately to suit the road and traffic conditions. Do not let the extra safety features tempt you into taking any risks when driving. Failure to do so could result in an accident.

Note

If a malfunction should occur in the ABS, this is indicated by a warning lamp ⇒ page 67. ■

Brake assist system

The brake assist system helps the driver to achieve optimum braking effect.

The brake assist system helps to increase braking power and thus to achieve a shorter stopping distance. If the driver presses the brake pedal very quickly, ▶

the brake assist system automatically boosts the braking force to the maximum level, up to the point where the anti-lock brake function (ABS) intervenes to stop the wheels from locking. You should then keep the brake pedal pressed until the vehicle has braked to the required speed. The brake assist system switches itself off as soon as you release the brake pedal.

The brake assist system will not be operative if there is a malfunction in the ABS or the ESP.

WARNING

Please remember that the accident risk always increases if you drive too fast, especially in corners or on a slippery road, or if you follow too close behind the vehicle in front of you. An increased accident risk cannot be compensated even by the brake assist system. Risk of accident. ■

Electronic differential lock (EDL)

The electronic differential lock prevents the loss of traction caused if one wheel starts spinning.

General notes

The electronic differential lock (EDL) helps the car to start moving, accelerate and climb a gradient in slippery conditions where this may otherwise be difficult or even impossible.

How it works

The EDL works automatically, i.e. without the driver's involvement. With the aid of the ABS sensors, the system monitors the rotational speed of the driven wheels ⇒ page 184. If a considerable *difference in revs* is detected (approx. 100 rpm) in the speed of the driven wheels, e.g. when only *one part* of the surface supporting the wheels is slippery, the system applies the brake to slow down the skidding wheel so that more of the power is directed to the other wheels. The systems works up to a speed of approx. 80 km/h. The system will make noises while it is working.

Moving away from a standstill

If one wheel has less grip and starts spinning (for instance, if one of the driven wheels is on ice), keep pressing the accelerator gradually until the car starts moving.

Overheating of the brakes

To prevent the brake disk of the braked wheel from overheating, the EDL cuts out automatically if subjected to excessive loads. In this case, the vehicle will continue to run and will have the same running properties as those of another without EDL.

The EDL will switch on again automatically when the brake has cooled down.

WARNING

- **When accelerating on a uniformly slippery surface (for instance all four wheels on ice or snow), press the accelerator gradually and carefully. Despite EDL, the driven wheels may otherwise start to spin. This could impair the car's stability. Risk of accident.**
- **Even with EDL, you should always adjust your speed to suit the conditions. Do not let the extra safety features tempt you into taking any risks when driving. Failure to do so could result in an accident.**

Note

If the ABS warning lamp lights up, this can also mean there is a fault in the EDL. Please take the vehicle to a specialist garage as soon as possible. ■

Traction control system (TCS)

The traction control system prevents the drive wheels from spinning when the car is accelerating.

General notes

The traction control system (TCS) is one of the functions incorporated in the electronic stabilisation programme (ESP).

The traction control system (TCS) helps the car to start moving, accelerate or climb a gradient in slippery conditions where this may otherwise be difficult or even impossible.

How it works

The TCS acts automatically, i.e. without the driver's intervention. With the aid of the ABS sensors ⇒ page 184, the TCS monitors the speed of the driven wheels. If the wheels start to spin, the engine power is reduced automatically to match the amount of grip available. The system is active across the entire speed range.

The TCS works in conjunction with the ABS. If a malfunction occurs in the ABS, the TCS will also be inoperative.

Note

To ensure that the TCS works properly, all four wheels must be fitted with identical tyres. The difference in size of the wheels may lead to an undesired reduction in engine power. Also see ⇒ page 242. ■

Brakes

General notes

New brake pads

New brake pads do not provide optimal performance during the first 400 km they must be “run in”. However, the reduced braking capacity may be compensated by pressing on the brake pedal a little harder. Avoid overloading the brakes during run-in.

Wear

The rate of wear on the **brake pads** depends a great deal on how you drive and the conditions in which the vehicle is operated. Negative factors are, for instance, city traffic, frequent short trips or hard driving with abrupt starts and stops.

Wet roads; road salt

In certain conditions, such as in heavy rain, or after washing the car or driving through water, the full braking effect can be delayed by moisture (or in winter by ice) on the discs and brake pads. The brakes should be “dried” by pressing the pedal to restore full braking effect.

When the velocity is *over* 80 km/h windscreen wipers are *on*, the brake system moves the pads towards the brake discs for a few seconds. This occurs - without warning to the driver - at regular intervals and requires a more rapid response from the brakes when driving on wet roads.

The effectiveness of the brakes can also be temporarily reduced if the car is driven for some distance without using the brakes when there is a lot of salt on the road in winter. In this case, the layer of salt on the brake discs and pads has to wear off before braking. ▶

Corrosion

There may be a tendency for dirt to build up on the brake pads and corrosion to form on the discs if the car is used infrequently, or if you only drive low mileages without using the brakes very much.

If the brakes are not used frequently, or if rust has formed on the disks, it is advisable to clean off the pads and disks by braking firmly a few times from a moderately high speed ⇒ ⚠.

Faults in the brake system

If the brake pedal travel should ever increase *suddenly*, this may mean that one of the two brake circuits has failed. Drive immediately to the nearest qualified workshop and have the fault rectified. On the way to the dealer, be prepared to use more pressure on the brake pedal, and allow for longer stopping distances.

Low brake fluid level

Malfunctions can occur in the brake system if the brake fluid level is too low. The brake fluid level is monitored electronically.

WARNING

When applying the brakes to clean off deposits on the pads and discs, select a clear, dry road. Be sure not to inconvenience or endanger other road users. Risk of accident.

Caution

- Never let the brakes "drag" by leaving your foot on the pedal when you do not really intend to brake. This overheats the brakes, resulting in longer stopping distances and greater wear.
- Before driving down a long, steep slope, it is advisable to reduce speed and change into a lower gear. This makes use of engine braking and prolongs the service life of the brakes. If you still have to use the brakes, it is better to brake firmly at intervals than to apply the brakes continuously.

Note

If you wish to equip the car with accessories such as a front spoiler or wheel covers, it is important that the flow of air to the front wheels is not obstructed, otherwise the brakes can overheat. ■

Brake servo

The brake servo assists the driver when braking

The brake servo amplifies the pressure you apply to the brake pedal. The brake servo works only when the engine is running.

WARNING

Ensure the vehicle does not move while in neutral, when the motor is stopped. Failure to do so could result in an accident.

Note

If the brake servo is not working, e.g. because the vehicle has to be towed or because it is broken, you will have to press the brake pedal considerably harder to make up for the lack of servo assistance. ■

Power steering

The power steering assists the driver when turning the steering wheel (with the engine running).

The power steering assists the driver by reducing the force needed to turn the steering wheel. ▶

The power steering does not work if the engine is off. In this case the steering wheel is very hard to turn.

If the steering is held at its *turning limit* when the car is stationary, this will place an excessive load on the power steering system. Turning the steering wheel to its limit places a load on the system, which causes noise. It will also reduce the idling speed of the engine.

Caution

When the engine is running, do not turn the steering wheel to its limit for more than 15 seconds. Otherwise, there is a risk of damaging the power steering.

Note

- If the power steering should fail at any time or the engine is switched off (for instance when being towed), the car can still be steered. However, more effort will be required to turn the steering wheel.
- If the system is leaking or malfunctioning, please take the car to a qualified workshop as soon as possible.
- The power steering requires a special hydraulic fluid. The fluid reservoir is located at the front of the engine compartment on the left ⇒ page 289. The correct fluid level in the reservoir is important for the power steering to function properly. The hydraulic fluid level is checked at the Inspection Service. ■

Servotronic

The servotronic system electronically adjusts the degree of power assistance

In cars equipped with servotronic power steering the degree of power assistance ⇒ page 187 is adjusted *electronically* according to road speed.

If a fault should occur in the *servotronic* system, the *power steering* will still operate. The degree of power assistance will, however, no longer adapt to different speeds. If the electronic regulating system is not working properly, this is most noticeable when turning the steering wheel at low speeds (for instance when parking) – more effort will be required than usual. The fault should be corrected by a qualified workshop as soon as possible. ■

Driving and the environment

Running-in

Running in a new engine

The engine needs to be run-in over the first 1,500 km.

Up to 1,000 kilometres

– Do not drive at speeds of more than 2/3 the maximum speed.

– Do not accelerate hard.

– Avoid high engine revolutions.

– Do not tow a trailer.

From 1000 to 1500 km

– Speeds can be *gradually* increased to the maximum road speed or maximum permissible engine speed (rpm).

During its first few hours of running, the internal friction in the engine is greater than later on, when all the moving parts have bedded in.

For the sake of the environment

If the engine is run in gently, its life will be increased and its oil consumption, reduced. ■

Braking effect and braking distance

The braking effect and braking distance are influenced by driving situations and road conditions.

The efficiency of the brakes depends directly on the **brake pad** wear. The rate of wear of the brake pads depends to a great extent on the conditions under which the vehicle is operated and the way the vehicle is driven. If you often drive in town traffic, drive short distances or have a sporty driving style, we recommend that you have the thickness of your brake pads checked by an Authorised Service Centre more frequently than recommended in the Service Schedule.

If you drive with **wet brakes**, for example, after crossing areas of water, in heavy rainfall or even after washing the car, the effect of the brakes is lessened as the brake discs are wet or even frozen (in winter): The brakes should be “dried” by pressing the pedal to restore full braking effect.

WARNING

Longer braking distances and faults in the brake system increase the risk of accidents.

- **New brake pads must be run in and do not have the correct friction during the first 200 km. However, the reduced braking capacity may be compensated by pressing on the brake pedal a little harder. This also applies when new brake pads are fitted.**
- **If brakes are wet or frozen, or if you are driving on roads which have been gritted with salt, braking power may set in later than normal.**
- **On steep slopes, if brakes are excessively used, they will overheat. Before driving down a long steep slope, it is advisable to reduce speed and change down into a lower gear (or move the selector lever to a lower gear if**

WARNING (continued)

your vehicle has automatic transmission). This makes use of engine braking and relieves the brakes.

- **Never let the brakes "slip" by applying light pressure. Continuous braking will cause the brakes to overheat and the braking distance will increase. Apply and then release the brakes alternately.**
- **Never let the vehicle run with the engine switched off. The braking distance is increased considerably when the brake servo is not active.**
- **Very heavy use of the brakes may cause a vapour lock if the brake fluid is left in the system for too long. This impairs the braking effect.**
- **Non-standard or damaged front spoilers could restrict the airflow to the brakes and cause them to overheat. Observe the relevant instructions before purchasing accessories ⇒ page 214, "Technical modifications".**
- **If a brake circuit fails, the braking distance will be increased considerably. Contact a qualified workshop immediately and avoid unnecessary journeys.** ■

Exhaust gas purification system

Catalytic converter*

To conserve the useful life of the catalytic converter

– Always use unleaded petrol.

– Do not let the fuel get too low in the tank.

– For engine oil changes, do not replenish with too much engine oil ⇒ page 224.

– Never tow the vehicle to start it, use jump leads if necessary ⇒ page 279.

If you notice misfiring, uneven running or loss of power when the vehicle is moving, reduce speed immediately and have the vehicle inspected at the nearest qualified workshop. In general, the exhaust warning lamp will light up when any of the described symptoms occur ⇒ page 66. If this happens, unburnt fuel can enter the exhaust system and escape into the environment. The catalytic converter can also be damaged by overheating.

WARNING

The catalytic converter reaches very high temperatures! Fire hazard!

- **Never park where the catalytic converter could come into contact with dry grass or inflammable materials under the vehicle.**
- **Do not apply additional underseal or anti-corrosion coatings to the exhaust pipes, catalytic converter or the heat shields on the exhaust system. These materials could catch fire when the vehicle is being driven.**

Caution

Never fully drain the fuel tank because the irregularity of the fuel supply may cause ignition problems. This allows unburnt fuel to enter the exhaust system, which could cause overheating and damage the catalytic converter.

For the sake of the environment

Even when the emission control system is working perfectly, there may be a smell of sulphur from the exhaust under some conditions. This depends on the sulphur content of the fuel used. Quite often the problem can be solved by changing to another brand of fuel. ■

Diesel engine particulate filter*

The diesel engine particulate filter eliminates soot produced by burning diesel.

The diesel engine dust filter eliminates most of the soot from the exhaust gas system. Under normal driving conditions, the filter cleans itself. If the driving conditions do not allow the filter to clean itself (for example, multiple short trips) the filter will be obstructed by dust and pollen and the indicator for the diesel engine particulate filter indicator will light up. See section on Warning Lights.

WARNING

- **The diesel engine particulate filter may reach extremely high temperatures; it should not enter into contact with flammable materials underneath the vehicle. Failure to comply could result in fire.**

Caution

- The vehicle is not designed for refuelling with mixtures of FAME fuel (biodiesel) over 7% in accordance with DIN 51628. The diesel particle filter will be damaged if this mixture percentage is exceeded. ■

Economical and environmentally friendly driving

Economical and environmentally friendly driving

Fuel consumption, environmental pollution and wear to the engine, brakes and tyres depends in large part on your driving style. By adopting an economical driving style and anticipating the traffic situation ahead, you can easily reduce fuel consumption by 10-15%. Some tips on how to help you reduce pollution while saving money are listed below.

As you drive try to anticipate the traffic situation

A vehicle uses most fuel when accelerating. When you anticipate the situation, you have to brake less often and, thus, accelerate less. If it is possible, let the vehicle roll with a **gear engaged**, for example, if you see a red light ahead. The braking effect achieved in this way helps to reduce the wear of brakes and tyres; emissions and fuel consumption are reduced to zero (disconnection due to inertia).

Change gear early to save energy

An effective way of saving fuel is to change up *quickly* through the gears. Running the engine at high rpm in the lower gears uses an unnecessary amount of fuel.

Manual gearbox: Change from first to second gear as quickly as possible. We recommend that, whenever possible, you change to a higher gear upon reaching 2,000 rpm.

Avoid driving at high speed

We advise you not to drive at the top speed permitted by the vehicle. Fuel consumption, exhaust emissions and noise levels all increase very rapidly at higher speeds. Driving at moderate speeds will help to save fuel.

Avoid idling

It is worthwhile switching off the engine when waiting in a traffic jam, at level crossings or at traffic lights with a long red phase. The fuel saved after only 30 - 40 seconds is greater than the amount of fuel needed to restart the engine.

The engine takes a very long time to warm up when it is running at idling speed. Mechanical wear and pollutant emissions are also especially high during this initial warm-up phase. It is therefore best to drive off immediately after starting the engine. Avoid running the engine at high speed. ▶

Periodic maintenance

Periodic maintenance work guarantees that, before beginning a journey, you will not consume more than the required amount of fuel. A well-serviced engine gives you the benefit of **improved fuel efficiency** as well as maximum reliability and an enhanced resale value.

A badly serviced engine can consume up to 10% more fuel than necessary.

Avoid short journeys

To reduce the consumption and emission of polluting gases, the engine and the exhaust filtration systems should reach the optimum **service temperature**.

With the engine cold, fuel consumption is proportionally higher. The engine does not warm up and fuel consumption does not regularise until having driven some *four* kilometres. This is the reason why we recommend avoiding short trips wherever possible.

Maintain the correct tyre pressures

Bear in mind that keeping the tyres at an adequate pressure saves fuel. If the tyre pressures are just 1 bar too low, this can put the fuel consumption up by as much as 5%. Due to the greater rolling resistance, under-inflation also increases **tyre wear** and impairs handling.

The tyre pressures should always be checked when the tyres are *cold*.

Do not use **winter tyres** all year round: they will increase fuel consumption by up to 10%.

Avoid unnecessary weight

Every kilo of **extra weight** will put up the fuel consumption, so it is worth checking the luggage compartment occasionally to make sure that no unnecessary loads are being transported.

A roof carrier is often left in place for the sake of convenience, even when it is no longer needed. At a speed of 100-120 km/h your car will use about 12% more fuel as a result of the extra wind resistance caused by the roof carrier even when it is not in use.

Saving electrical energy

The engine activates the alternator, which produces electricity. With the need for electricity, fuel consumption is also increased. Because of this, always turn off electrical equipment when you do not need them. Examples of equipment that use a lot of electricity are: the fan at high speeds, the rear window heating or the seat heaters*. ■

Environmental friendliness

Environmental protection is a top priority in the design, choice of materials and production of your new Seat.

Design measures for economical recycling

- Joints and connections designed for ease of dismantling
- Modular construction to facilitate dismantling
- Increased use of single-grade materials
- Plastic parts and elastomers are labelled in accordance with ISO 1043, ISO 11469 and ISO 1629

Choice of materials

- Nearly all materials used can be recycled
- Similar types of plastics grouped together for easy recycling
- Recycled materials used in manufacture
- Reduction of volatile compounds in plastics
- CFC-free refrigerant in air conditioning

Compliance with prohibited materials laws: cadmium, lead, mercury, chrome VI.

Manufacturing methods

- Use of recycled material for manufacturing plastic parts
- Solvent-free cavity sealing ▶

- Solvent-free wax for protecting the vehicles in transit
- Solvent-free adhesives
- No CFCs used in production
- Surplus materials used extensively for energy conversion and building materials
- Overall water consumption reduced
- Heat recovery systems
- The use of water-soluble paints ■

Driving abroad

Observations

To drive abroad, the following must be taken into consideration:

- For vehicles fitted with a catalytic converter ensure that unleaded petrol is available for the journey. See the chapter “Refuelling”. Automobile organisations will have information about service station networks selling unleaded fuel.
- In some countries, it is possible that a vehicle model is sold under conditions where some spare parts are not available or that the Authorised Service Centre may only carry out limited repairs.

SEAT importers and distributors will gladly provide information about the technical preparation of your vehicle and also about necessary maintenance and repair possibilities. ■

Adhesive strips for headlights

If you have to drive a right-hand drive vehicle in a left-hand drive country, or vice versa, the asymmetric dipped beam headlights will dazzle oncoming traffic.

To prevent dazzling, you must apply stickers to certain parts of the headlight lenses. Further information is available in your Authorised Service Centre.

In vehicles with self-directing headlights, the rotation system must previously be disconnected. To do this, please go to a specialist workshop. ■

Trailer towing

Trailer towing

Technical requirements

The towing bracket must meet certain technical requirements.

Your car is intended mainly for transporting passengers and luggage. However, if suitably equipped, it can also be used to tow a trailer or caravan.

If your vehicle has been **factory**-supplied with a towing bracket, all of the necessary technical and legal aspects for trailing towing have been taking into account during manufacturing.

Your vehicle is fitted with a 13-pole socket for the electrical connection between the trailer and the vehicle. If the trailer has a **7-pole connector** you can use an adapter cable. This can be purchased from any SEAT Dealer.

If a towing bracket is to be fitted after the car is purchased, this must be done according to the instructions of the towing bracket manufacturer ⇒ page 203.

WARNING

If a towing bracket is retrofitted, the installation should be carried out by a specialist garage.

- **Particularly in high outdoor temperatures, it is not possible to drive up long steep gradients without a suitable cooling system. The engine would heat up.**
- **Incorrect installation can result in a safety risk!** ■

Notes on towing

There are a number of points which need to be checked before towing a trailer or caravan.

– Observe the maximum permitted trailer weights ⇒ page 289.

Trailer weights

Never exceed the maximum permitted trailer weights.

If you do not load the trailer up to the maximum permitted trailer weight, you can then climb correspondingly steeper gradients.

The maximum trailer weights listed are only applicable for **altitudes** up to 1,000 m above sea level. With increasing altitude the engine power and therefore the vehicle's climbing ability are impaired because of the reduced air density. The maximum trailer weight has to be reduced accordingly. The weight of the car and trailer must be reduced by about 10% for every subsequent 1000 m (or part thereof). This figure refers to the combined weight of the (loaded) vehicle and (loaded) trailer.

The figures for the **draw bar weight** that appear on the identification plate of the towing bracket are for certification purposes only. The correct figures for your specific model, which may be *lower* than these figures for the towing bracket, are given in the registration documents and on ⇒ page 282. Also refer to ⇒ page 289.

Distributing the load

Distribute loads in the trailer so that heavy objects are as near to the axle as possible. Loads carried in the trailer must be secured to prevent them moving.

Where possible, operate the trailer with the maximum permitted **draw bar weight** on the ball joint of the towing bracket, but do not exceed the specified limit.

Tyre pressure

Check the tyre pressures on your car, and adjust for “full load” conditions (refer to the sticker listing the tyre pressures on the door pillar). It may also be necessary to adjust the tyre pressures on the trailer according to the recommendations of the trailer manufacturer.

Exterior mirrors

Check whether you can see enough of the road behind the trailer with the standard mirrors. If this is not the case you should have additional mirrors fitted. The two exterior mirrors should be fitted on folding arms. Adjust the mirrors to give sufficient rear vision.

Headlights

Before starting a journey, check the headlight beam settings with the trailer hitched up. If necessary, alter the height of the headlight beams by means of the headlight range control. See ⇒ page 120.

Power supply

When you remove the ignition key, the power supply to the trailer is interrupted.

Removable ball joint coupling

Vehicles with a factory-fitted towing bracket are equipped with a *removable* ball joint coupling. This is stored in the spare wheel well in the luggage compartment together with the necessary fitting instructions.

Note

If you frequently tow, we recommend you also have vehicle serviced between services. ■

Notes on towing

Towing a trailer involves additional attention by the driver.

Weight distribution

The weight distribution of a loaded trailer with an unladen vehicle is very unfavourable. However, if this cannot be avoided, drive extra slowly to allow for the unbalanced weight distribution.

Speed

The stability of the car and trailer is reduced with increasing speed. Therefore, it is advisable not to drive at the maximum permissible speed in an unfavourable road, weather or wind conditions. This especially applies when driving downhill.

You should always reduce speed immediately if the trailer shows the slightest sign of **swaying**. Never try to stop the “snaking” by increasing speed.

Anticipate hazards and brake in good time. If towing a trailer with an **inertia brake**, first brake *gently* and then more severely. This will prevent brake tapping by the trailer wheels when they lock. Select a low gear in due course before going down a steep downhill. This enables you to use the engine braking to slow down the vehicle.

Swaying and pitching can be reduced by stabiliser aids. We recommend having stabiliser aids installed when towing trailers with a high trailer load. They can be purchased and installed at a Dealer.

Reheating

When climbing long hills in hot weather with the engine running fast in low gear, you should keep an eye on the coolant temperature gauge ⇒ page 60. Reduce speed immediately if the needle moves to the right end of the scale. If the temperature warning light in the instrument cluster should start flashing, stop the car and let the engine cool down by running it *at idling speed* for a few minutes. ■

Equipment and accessories

Before mounting equipment and accessories (e.g. bicycle rack) please observe the following notes.

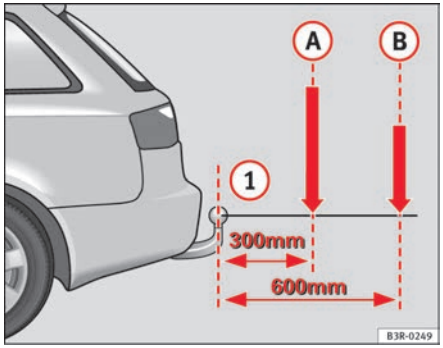

Fig. 155 Load distribution of equipment and accessories

The equipment/accessories mounted must not protrude more than 700 mm from the ball joint (1).

The total weight (mounted equipment plus the load) must not exceed 75 kg.

The maximum load depends on where the centre of gravity lies.

The maximum weight decreases as the distance between the centre of gravity and the ball joint (1) increases.

The following limits apply:

If the distance is 300 mm, the total weight (incl. the equipment mounted) (A) must not exceed 75 kg.

If the distance is 600 mm, the total weight (incl. the equipment mounted) (B) must not exceed 35 kg.

Only bicycle racks for **a maximum of three** bicycles may be used.

Equipment and accessories mounted on the towing bracket

SEAT recommends that you only mount equipment (e.g. bicycle rack) which has been officially approved on the ball joint. If you wish to attach other equipment please make sure that it has been approved by the manufacturer for use on the ball joint. If you mount unsuitable equipment, this can cause damage to the towing bracket. In an extreme case, damage to the towing bracket could cause it to break ⇒ ⚠.

⚠ WARNING

- **If you wish to mount equipment which has not been approved by SEAT, please ensure that it is suitable for use on SEAT vehicles.**
- **The use of unsuitable accessory equipment can result in severe damage to the towing bracket, and it could then break while pulling a trailer - Risk of accident.**
- **Never use tools of any kind when fitting and removing the ball joint. This would damage the locking device, no longer guaranteeing the correct working order of the bracket. This could lead to an accident.** ■

Removable towing bracket

Introduction

Special care is required when fitting and removing the towing bracket.

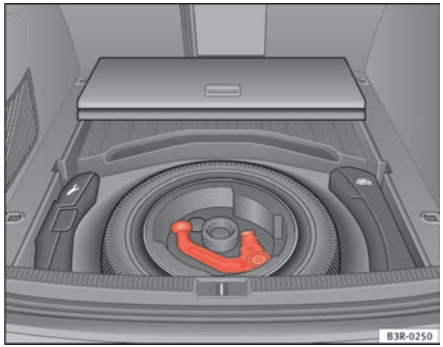

Fig. 156 Luggage compartment: Spare wheel with towing bracket

The removable ball joint attachment for the towing bracket is stored under the floor panel in the luggage compartment.

- On vehicles with a spare wheel ⇒ fig. 156.

The ball joint can be fitted and removed by hand.

Equipment / Accessories mounted on the towing bracket

Please note that the ball joint attachment can be damaged by using unsuitable equipment that is mounted onto the towing bracket (e.g. bicycle rack). Due to the material construction, such damage to the towing bracket dramatically increases safety risks and in extreme cases could lead to breakage of the towing bracket while towing ⇒ ⚠.

Therefore, **before buying** such equipment, ensure that it is suitable for mounting onto the vehicle's towing bracket and that it is approved for this purpose. To prevent damage to the ball joint from unsuitable equipment, we recommend that equipment for the towing bracket be purchased through your SEAT Dealer. Also refer to ⇒ page 214.

⚠ WARNING

- **Only mount equipment on the towing bracket of your vehicle if you are certain it will not damage the bracket. The use of unsuitable accessory equipment can result in severe damage to the towing bracket, and it could then break while pulling a trailer - Risk of accident.**
- **Never use tools of any kind when fitting and removing the ball joint. This would damage the locking device, no longer guaranteeing the correct working order of the bracket. This could lead to an accident.**

Note

- Do not attempt to modify or repair the ball joint or other towing bracket components.
- Should you have any difficulties when using the towing bracket, or suspect that it is not fitted properly, contact a specialist garage.
- Before setting off, always check that the ball joint is secured properly ⇒ page 200.
- Never disengage the ball joint with the caravan / trailer still hitched or with a bicycle rack or similar accessory still attached.
- It is advisable to remove the ball joint when you are not towing a trailer. Make sure that the cover piece is properly fitted on the mounting fixture on the vehicle.
- Remove the ball joint before washing the vehicle with pressurised steam equipment. Make sure the cover piece is fitted correctly onto the mounting fixture. ■

Fitting the ball joint (step 1)

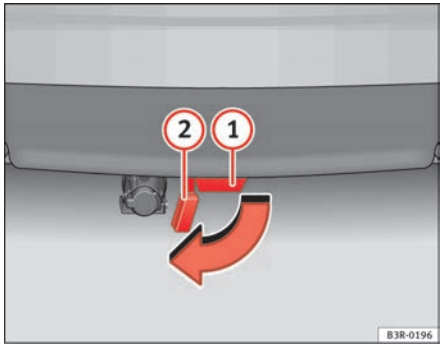

Fig. 157 Rear bumper: Open the cover piece

– Remove the cover piece (2) ⇒ fig. 157 on the mounting fixture (1) below the bumper as far as it will go. The cover piece is held automatically in the open position.

– Make sure the mounting fixture is clean. If not, clean it ⇒ ⚠.

Cont ⇒ page 198, “Fitting the ball joint (step 2)”.

⚠ WARNING

It is important to keep the mounting fixture clean. Otherwise the ball joint may fail to engage safely and securely. This could lead to an accident. ■

Fitting the ball joint (step 2)

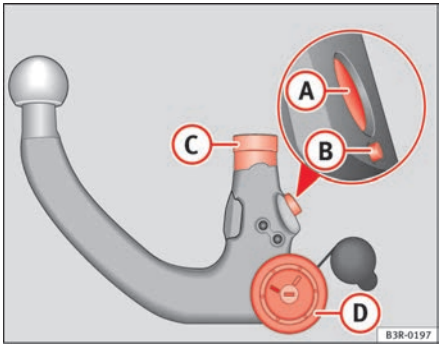

Fig. 158 Removable towing bracket: Ball joint

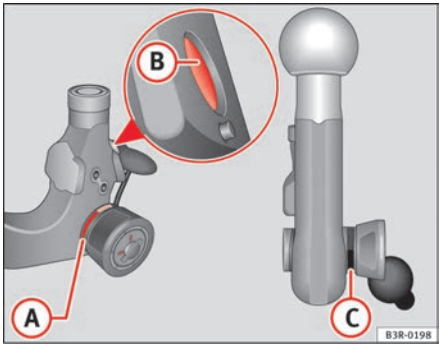

Fig. 159 Removable towing bracket: Ball joint ▶

Make sure the ball joint is clean and undamaged

– Check the locking pin (A), release pin (B), shaft section (C) and knob (D) ⇒ page 198, fig. 158 on the ball joint to make sure they are clean and undamaged.

The spring mechanism inside the ball joint must be in the ready position

– Check that the red marking (A) ⇒ page 198, fig. 159 on the knob is inside the black zone marked on the ball joint.

– Check that the locking pin (B) is inside the holes in the shaft section of the ball joint.

– Check that the knob protrudes visibly from the ball joint, so that there is a clear gap (C) between the knob and the ball joint.

The ball joint can only be installed if the internal spring mechanism is in the **ready** position.

Cont ⇒ page 199, “Fitting the ball joint (step 3)”. ■

Fitting the ball joint (step 3)

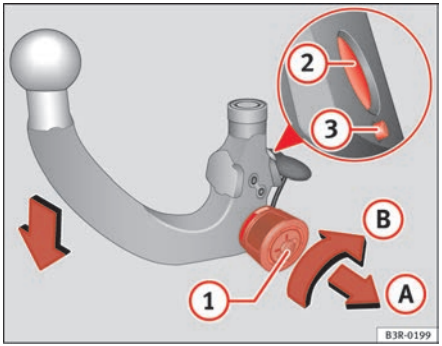

Fig. 160 Removable towing bracket: Setting the spring mechanism to the "ready" position

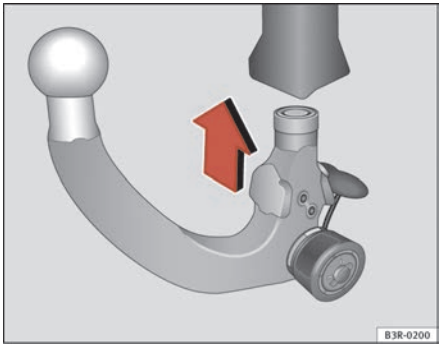

Fig. 161 Removable towing bracket: inserting the ball joint

Setting the spring mechanism to the ready position (if required)

– Insert the key (1) ⇒ page 199, fig. 160 in the lock on the knob and turn it towards the red marking.

– Pull out the knob in direction (A), hold and turn in direction (B) until the locking pin (2) engages and the release pin (3) moves out visibly ⇒ ⚠.

inserting the ball joint

– With the spring mechanism in the ready position, insert the ball joint into the mounting fixture and push it upwards ⇒ page 199, fig. 161 in the direction indicated (arrow) ⇒ ⚠. It should lock into position automatically. You should now clearly hear it click into place.

– Lock the ball joint by turning the key to the green marking.

– Remove the key.

Cont ⇒ page 200, “Fitting the ball joint (step 4)”.

⚠ WARNING

- **If it is not possible to set the spring mechanism to the ready position as described above, do not use the ball joint. Please contact a specialist garage.**
- **To avoid injury, keep your hands away from the knob or cover piece when inserting the ball joint in the mounting fixture. Otherwise, you could be injured.** ■

Fitting the ball joint (step 4)

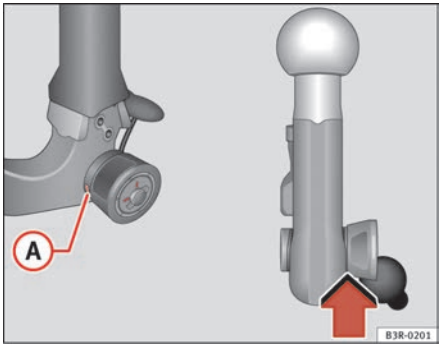

Fig. 162 Removable towing bracket: Safety check

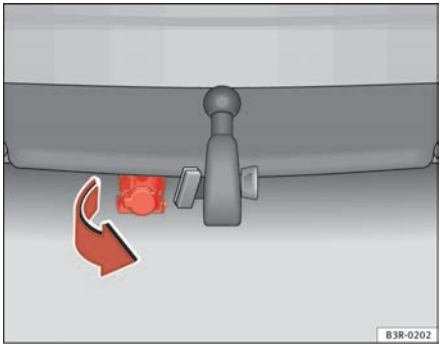

Fig. 163 Rear bumper: Pulling down the connecting socket

Safety check

– Check that the green marking (A) ⇒ page 200, fig. 162 on the knob is inside the black zone marked on the ball joint.

– Check that the knob is directly against the ball joint, so that there is no gap between the knob and the ball joint -arrow-.

– Check that the ball joint is locked and the key is removed so that the knob cannot be pulled out ⇒ ⚠.

– Check that the ball joint fits tightly in the mounting fixture (try moving it about to check).

Towing socket

– To plug in the electrical connection for the trailer, pull down the socket below the bumper ⇒ page 200, fig. 163.

If the safety check is not satisfactory, the ball joint must be fitted again properly.

⚠ WARNING

To avoid accidents, the ball joint must meet all the safety requirements listed in the safety check. The towing bracket must not be used if any one of these requirements is not met. If this is the case, you should contact a specialist garage. ■

Removing the ball joint

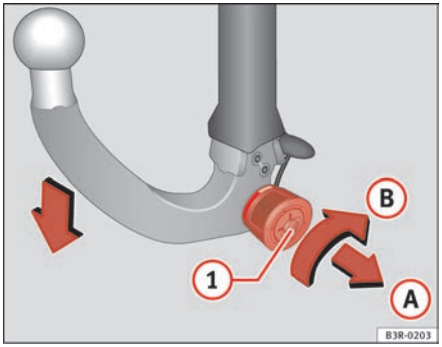

Fig. 164 Removable towing bracket: Removing the ball joint

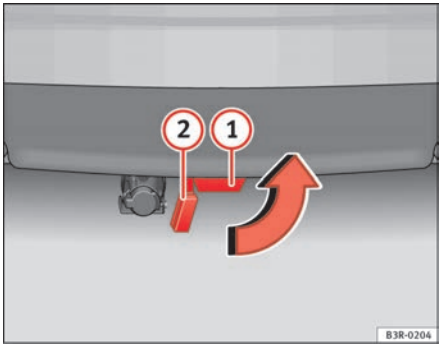

Fig. 165 Rear bumper: fitting the cover piece

– Insert the key in the lock (1) ⇒ fig. 164 on the knob.

– Unlock the ball joint by turning the key to the red marking. ▶

- Take hold of the ball joint and pull out the knob in direction (A).
- Keep hold of the knob and turn it as far as it will go in direction (B).
- Release the knob. The spring mechanism will remain in the ready position ⇒ ⚠.
- Pull the ball joint down out of the mounting fixture (1) ⇒ page 201, fig. 165. The cover piece will cover the mounting fixture automatically (2).
- Put away the ball joint attachment under the floor panel in the luggage compartment.
- Move the socket back up to its original position.

⚠ WARNING

- **To avoid injury, keep your hands away from the locking pin and the release pin when releasing the locking mechanism.**
- **Make sure that the cover piece is properly engaged on the mounting fixture on the vehicle. Otherwise the ball joint may fail to engage securely if dirt accumulates in the mounting fixture.** ■

Fitting a towing bracket*

It is possible to fit a towing bracket to the rear of the vehicle.

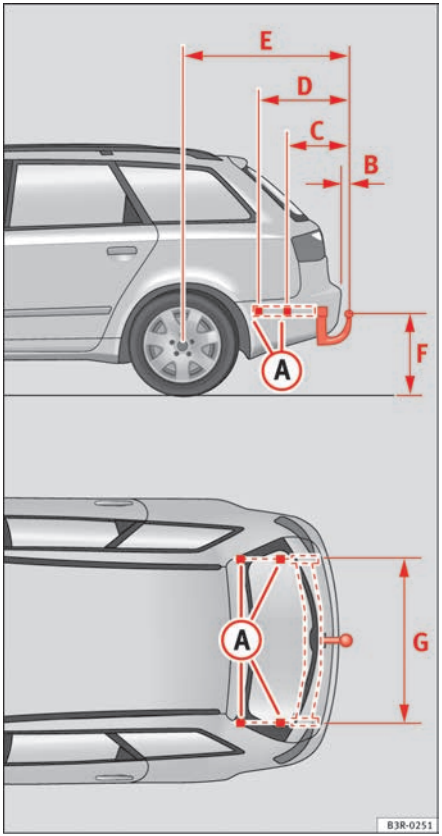

Fig. 166 Attachment points for towing bracket

If a towing bracket is to be fitted after the vehicle is purchased, this must be completed according to the instructions of the towing bracket manufacturer.

The attachment points for the towing bracket (A) are on the lower part of the vehicle.

The distance between the centre of the ball coupling and the ground should never be lower than the indicated value, even with a fully loaded vehicle and including the maximum resting weight.

Elevation values for securing the towing bracket:

(B) 65 mm (minimum)
(C) 403
(D) 629 mm
(E) 1112 mm (vehicle with max. load)
(F) from 350 to 420 mm (fully loaded vehicle)
(G) 1,000 mm

Fitting a towing bracket

- Driving with a trailer involves an extra effort for the vehicle. Therefore, before fitting a towing bracket, please contact an Authorised Service Centre to check whether your cooling system needs modification.
- Submit to the legal requirements in your country (e.g. the fitting of a separate warning lamp).
- Certain vehicle components, e.g. the rear bumper, must be removed and reinstalled. The towing bracket securing bolts must be tightened using a torque wrench, and an electrical socket must be connected to the vehicle's electrical system. The above-mentioned require specialized knowledge and tools.
- Figures in the illustration show the elevation value and the attachment points which must be considered if you are retrofitting a towing bracket.

WARNING

Towing brackets should be fitted by specialists.

WARNING (continued)

- **If the towing bracket is incorrectly installed, there is serious danger of accident.**
- **For your own safety, please observe the instructions provided by the manufacturer of the towing bracket.**

Caution

- If the electrical socket is incorrectly installed, this could cause damage to the vehicle's electrical system.

Note

For the Sport finish, fitting a trailer bracket is not recommended due to the design of the bumpers. ■

Your vehicle maintenance and cleaning

General notes

Regular washing and care help maintain the value of your vehicle.

Your vehicle maintenance

Regular care and washing help to **maintain the value** of the vehicle. This may also be one of the requirements for acknowledging warranty claims in the event of bodywork corrosion or paint defects.

The best way to protect your car against the harmful effects of the environment is through correct maintenance and *frequent* washing. The longer substances such as insects remains, bird droppings, resinous tree sap, road dirt, industrial deposits, tar, soot or road salt and other aggressive materials remain on the vehicle, the more damage they do to the paintwork. High temperatures (for instance in strong sunlight) further intensify the corrosive effect.

After winter, a period when salt is put on the roads, it is important to have the **underside** of the vehicle washed thoroughly.

Products for vehicle maintenance

Car care products are available in your Authorised Service Centre. Keep the product instructions until you have used them up.

WARNING

- **Car care products can be toxic. For this, they must always be kept closed in their original container. Keep them out of the reach of children. Failure to comply could result in poisoning.**
- **Always read and observe the instructions and warnings on the package before using car care products. Improper use could damage your health or**

WARNING (continued)

your vehicle. The use of certain products may produce noxious vapours; they should be used in well ventilated areas.

- **Never use fuel, turpentine, engine oil, nail varnish remover or other volatile fluids. These are toxic and highly flammable. Risk of fire and explosion.**
- **Before washing your vehicle, or carrying out any maintenance, switch the engine off, apply your handbrake firmly and remove the key from the ignition.**

Caution

Never attempt to remove dirt, mud or dust if the surface of the vehicle is dry. Never use a dry cloth or sponge for cleaning purposes. This could damage the paintwork or the windows of your vehicle. Soak dirt, mud or dust with plenty of water.

For the sake of the environment

- When purchasing products for your vehicle maintenance, select the ones which are not harmful to the environment.
- The leftovers of the car care products should not be disposed of with ordinary household waste. Observe the disposal information on the package. ■

Vehicle exterior maintenance

Automatic car wash tunnel

The car can normally be washed without problem in an automatic car wash.

The vehicle paintwork is so durable that the car can normally be washed without problems in an automatic car washing tunnel. However, the paintwork wear depends to a large extent, on the kind of the car washing tunnel, the brushes used, its water filtering and the type of cleaning and preservative products.

Before going through a car wash, be sure to take the usual precautions such as closing the windows and sunroof. There is nothing to note apart from that.

If the vehicle has special accessories such as spoilers or a roof carrier or two-way radio aerial, etc., it is advisable to consult the car washing tunnel operator.

After washing, the **brakes** could hesitate to respond as the brake discs and pads could be wet, or even frozen in winter. “Dry” the brakes by braking several times.

WARNING

Water, ice and salt on the brakes can reduce braking efficiency. Risk of accident. ■

Washing by hand

Vehicle washing

– First soften the dirt with plenty of water and rinse it off.

– Clean your vehicle from top to bottom with a soft sponge, a glove or a brush. Use very light pressure.

– Rinse the sponge or glove often with clean water.

– Special car shampoo should only be used for very stubborn dirt.

– Clean the wheels, sill panels etc. until last with a different sponge or glove.

– Rinse the vehicle thoroughly with water.

– Dry your vehicle surface gently with a chamois leather.

– When **temperature is cold**, dry the rubber seals and its surfaces to prevent them from freezing. Apply silicone spray to the rubber seals.

After washing

– Directly after washing, avoid sudden and sharp braking. “Dry” ⇒ page 189, “Braking effect and braking distance”the brakes by braking several times.

WARNING

- **Wash your car with the ignition switched off.**
- **Protect your hands and arms from cuts on sharp metal edges when cleaning the underbody, the inside of the wheel housings etc. Risk of injury.**
- **Water, ice and salt on the brakes can reduce braking efficiency. Risk of accident.**

Caution

- Never remove dirt, mud or dust if the vehicle surface is dry. Never use a dry cloth or sponge for cleaning purposes. This could scratch the paintwork or glass on your vehicle.
- Washing the vehicle in low temperatures: when washing the vehicle with a hose, do not direct water into the lock cylinders or the gaps around the doors, tailgate, or sunroof. Risk of freezing.

For the sake of the environment

To protect environment, the car should be washed only in specially provided wash bays. This prevents toxic, oil-laden waste water entering the sewerage system. In some districts, washing vehicles outside wash bays is prohibited.

Note

Do not wash the vehicle in direct sunlight. ■

Washing the car with a high pressure cleaner

Be particularly careful when using a high pressure cleaner!

– Always observe the instructions for the high-pressure cleaner, particularly those concerning the **pressure** and the **spraying distance**.

– Increase the spraying distance for soft materials and painted bumpers.

– Do not use a high pressure cleaner to remove ice or snow from windows ⇒ page 208.

– Never use concentrated jet nozzles (“rotating jets”) ⇒ ⚠.

– Directly after washing, avoid sudden and sharp braking. “Dry” ⇒ page 189 the brakes by braking several times.

WARNING

- **Never wash tyres with a concentrated jet (“rotating nozzle”). Even at large spraying distances and short cleaning times, visible and invisible damage can occur to the tyres. This may cause an accident.**
- **Water, ice and salt on the brakes can reduce braking efficiency. Risk of accident.**

Caution

- Do not use water hotter than 60°C. This could damage the vehicle.
- To avoid damage to the vehicle, keep a sufficient distance from sensitive materials such as flexible hoses, plastic, soundproofing material, etc. This is also important for bumpers painted as the paintwork. The closer the nozzle is to the surface, the greater the wear on the material. ■

Vehicle paint maintenance requirements

Regular waxing protects the paintwork.

You need to apply wax to your car if water does not form small drops and run off the paintwork when it is *clean*.

A good quality *hard wax* product is available from your Authorised Service Centre. ▶

Regular wax applications help to protect the paintwork from environmental contaminants ⇒ page 205. It is also effective in protecting against minor scratches.

Even if a **wax solution** is used regularly in the car washing tunnel, it is advisable to protect the paint with a hard wax coating at least twice a year. ■

Polishing the paintwork

Polishing brings back gloss to the paintwork.

Polishing is only necessary if the paint has lost its shine, and the gloss cannot be brought back by applying wax. Polishing products can be purchased in your Authorised Service Centre.

The car must be waxed after polishing if the polish used does not contain wax compounds to seal the paint ⇒ page 207, "Vehicle paint maintenance requirements".

Caution

To prevent damage to the paintwork:

- Do not use polishes and hard wax on painted parts with a matte finish or on plastic parts.
- Do not polish your vehicle in a sandy or dusty environment. ■

Caring for plastic parts

Solvents damage plastic parts.

If normal washing fails to clean plastic parts, clean them with approved **solvent-free** plastic cleaning and care products.

Caution

- The use of liquid air freshener directly over the air vents of the vehicle may damage the plastic parts if the liquid is accidentally spilled.
- Cleaning products which contain solvents will damage the material. ■

Cleaning windows and exterior mirrors

Cleaning windows

– Moisten the windows with commercially available, alcohol based glass cleaner.

– Dry the windows with a clean chamois leather or a lint-free cloth.

Removing snow

– Use a small brush to remove snow from the windows and mirrors.

Removing ice

– Use a de-icer spray.

Use a clean cloth or chamois leather to dry the windows. The chamois leathers used on painted surfaces are not suitable to clean windows because they are soiled with wax deposits which could smear the windows.

If possible, use a de-icing spray to remove ice. If you use an ice scraper, push it in one direction only without swinging it.

Use window cleaner or a silicone remover to clean rubber, oil, grease and silicone deposits off.

Wax deposits can be removed with a special cleaner available in your Authorised Service Centre. Wax deposits on the windscreen could cause the wiper blades to judder. If a window cleanser, specifically for removing wax, is added ▶

to the windscreen washer fluid prevents wiper blades from juddering. Wax deposits are not removed.

Caution

- Never use warm or hot water to remove snow and ice from windows and mirrors. This could cause the glass to crack!
- The heating element for the rear window is located on the inner side of the window. To prevent damage, do not put stickers on the heating elements inside the window. ■

Cleaning windscreen wiper blades

Clean wiper blades are essential to provide clear vision.

1. Use a soft cloth to remove dust and dirt from the windscreen wiper blades.
2. Use window cleanser to clean the windscreen wiper blades. Use a sponge or a cloth to remove stubborn stains. ■

Rubber seals maintenance

If rubber seals are well looked after, they will not freeze so quickly.

1. Use a soft cloth to remove dust and dirt from the rubber seals.
2. Apply a specialist care product to the rubber seals.

The strips on the doors, windows, bonnet and rear lid will remain pliable and last longer if they are treated with a suitable care product (for example silicone spray).

Caring for rubber seals will also prevent premature ageing and leaks. The doors will be easier to open. If rubber seals are well looked after, they will not freeze so quickly in winter. ■

Door lock cylinders

The door lock cylinders can freeze up in winter.

To de-ice the lock cylinders you should only use spray with lubricating and anti-corrosive properties. ■

Cleaning chrome parts

1. Clean chrome parts with a damp cloth.
2. Polish chrome parts with a soft, dry cloth.

If this does not provide satisfying results, use a specialist **chrome cleaning product**. Chrome cleaning products will remove stains and coatings from the surface.

Caution

To prevent scratching chrome surfaces:

- Never use an abrasive care product on chrome.
- Do not clean or polish chrome parts in a sandy or dusty environment. ■

Steel wheel rims

– Clean steel wheel rims regularly using a separate sponge.

Use an industrial cleanser to remove brake dust. Any damage to the paint on steel wheel rims should be repaired before starting to rust.

WARNING

- **Never wash tyres with a cylindrical jet. Even at large spraying distances and short cleaning times, visible and invisible damage can occur to the tyres. This may cause an accident.**
- **Water, ice and salt on the brakes can reduce braking efficiency. Risk of accident. Directly after washing, avoid sudden and sharp braking. "Dry" ⇒ page 189 the brakes by braking several times.** ■

Cleaning alloy wheel rims

Every two weeks

– Wash salt and brake dust from alloy wheels.

– Use an acid free detergent to clean the wheel rims.

Every three months

– Apply a hard wax compound to the wheels.

Alloy wheels require regular attention to preserve their appearance. If road salt and brake dust are not often removed, the aluminium finish will be impaired.

Always use an acid-free detergent for alloy wheel rims.

Car polish or other abrasive agents should not be used. If the protective coating is damaged, e.g. by stone impact, the damaged area should be repaired immediately.

WARNING

- **Never wash tyres with a cylindrical jet. Even at large spraying distances and short cleaning times, visible and invisible damage can occur to the tyres. This may cause an accident.**
- **Water, ice and salt on the brakes can reduce braking efficiency. Risk of accident. Directly after washing, avoid sudden and sharp braking. "Dry" ⇒ page 189 the brakes by braking several times.** ■

Underbody maintenance

The vehicle underbody is coated to protect it from chemical and mechanical damage.

The protective coating can be damaged when driving. We recommend you to ckeck the protective coating under the body and on the running gear, and reinstated if necessary, before and after the winter season.

We recommend you to go to your Authorised Service Centre to carry out repair work and additional anti-corrosion work.

WARNING

Do not apply underseal or anti-corrosion coatings to the exhaust pipes, catalytic converter or the heat shields on the exhaust system. The heat of the exhaust system or the engine could cause them to ignite! Fire hazard. ■

Cleaning the engine compartment

Take special care when cleaning the engine compartment.

Anti-corrosion treatment

The engine compartment and the surface of the power unit are given anti-corrosion treatment at the factory.

Good corrosion protection is particularly important in winter when the car is frequently driven on salted roads. To prevent the salt corroding the vehicle, the entire engine compartment should be thoroughly cleaned before and after winter.

Your Authorised Service Centre has got the necessary equipment to provide the correct cleaning and preserving products. For this reason, we recommend having this work performed by them.

The anti-corrosion protection is usually removed if the engine compartment is cleaned with grease removing solutions, or if you have the engine cleaned. On commissioning theis work, ensure that all surfaces, seams, joints and components in the engine compartment are given anti-corrosion treatment.

WARNING

- **When working in the engine compartment, always observe the safety warnings ⇒ page 221**
- **Before opening the bonnet, switch the engine off, apply the parking brake firmly and always remove the key from the ignition.**
- **Allow the engine to cool before you clean the engine compartment.**
- **Do not clean the vehicle underbody, wheel arches without protecting your hands and arms. You may cut yourself on sharp-edged metal parts. Failure to comply could result in injury.**
- **Moisture, ice and salt on the brakes may affect braking efficiency. Risk of accident. Directly after washing, avoid sudden and sharp braking.**

WARNING (continued)

- **Never touch the radiator fan. It is temperature-controlled and could start automatically, even when the key is removed from the ignition!**

For the sake of the environment

Fuel, grease and oil deposits could be removed when the engine is washed. The polluted water must be cleaned in an oil separator. For this reason, engine washing should be carried out only by a qualified workshop or a petrol station. ■

Vehicle interior maintenance

Plastic parts and dash panel cleaning

– Use a clean, damp cloth to clean plastic parts and the dash panel.

– If this does not provide satisfactory results, use a special **solvent-free** plastic cleaning product.

WARNING

Never clean the dash panel and the airbag module surface with cleansers containing solvents. Solvents cause the surface to become porous. If the airbag triggered, disintegrating plastic parts could cause substantial injuries.

Caution

Cleaning products which contain solvents will damage the material. ■

Wooden trim cleaning*

– Clean the wooden trim with a water-moistened clean cloth.

– If this does not provide satisfactory results, use a *gentle* soap solution.

Caution

Cleaning products which contain solvents will damage the material. ■

Cloth seat covers and fabric trim cleaning

Cloth seat covers and fabric trim on the doors, headlining etc. can be cleaned with a special interior cleanser or with dry foam and a soft brush. ■

Leather cleaning*

Normal cleaning

– Moisten a cotton or woollen cloth with water and wipe over the leather surfaces.

Cleaning stubborn stains

– More stubborn dirt can be removed using a mild soap solution (pure liquid soap; two tablespoons diluted in one litre of water) and a cloth.

– Do not let the water soak through the leather or soak into the seams.

– Then wipe off with a soft, dry cloth.

Leather maintenance

– The leather should be treated twice a year with a special leather-care product, available in your Authorised Service Centre.

– Apply these products very sparingly.

– Then wipe off with a soft, dry cloth.

SEAT does everything possible to preserve the genuine qualities of this natural product. Due to the natural properties of the specially selected hides employed, the finished leather has a certain sensitivity to grease and dirt, etc. so a degree of care is required in everyday use and when looking after the leather.

Dust and grit in the pores and seams can scratch and damage the surface. If the vehicle is under solar radiation for long periods, the leather should be protected to prevent it from fading. However, slight colour variations in high-quality natural leather are normal.

Caution

- Do not use solvents, wax polish, shoe cream, spot removers or similar products on leather.
- To avoid damage, stubborn stains should be removed by a qualified workshop. ■

Seat belts cleaning

A dirty belt may not work properly.

Check all seat belts regularly and keep them clean.

Seat belts cleaning

– Pull the dirty seat belt right out and unroll it.

– Clean dirty seat belts with a *gentle* soap solution.

– Allow it to dry.

– Do not roll the seat belt up until it is dry.

If large stains form on the belts, it will not retract correctly into the automatic belt retractor.

WARNING

- **Do not use chemical cleaning agents on the seat belts, as this can impair the strength of the webbing. Ensure that belts do not come into contact with corrosive fluids.**
- **Check all seat belts condition at regular intervals. If you notice that the belt webbing, fittings, retractor mechanism or buckle of any of the belts is damaged, the belt must be replaced by a specialist workshop.**
- **Do not attempt to repair a damaged seat belt yourself. The seat belts must not be removed or modified in any way.**

Caution

After cleaning, allow seat belts to dry completely before rolling them up. Otherwise, the belt retractors could become damaged. ■

Accessories, parts replacement and modifications

Accessories and spare parts

Always consult an Authorised Service Centre before purchasing accessories and parts.

Your vehicle is designed to offer a high standard of active and passive safety.

Before purchasing accessories and parts, and before making technical changes to your car, we recommend you to consult your Authorised Service Centre.

SEAT dealerships will be happy to provide you with the latest information about the use, legal requirements and recommendations from the manufacturer regarding accessories and parts.

We recommend you use only **SEAT Approved Accessories®** and **SEAT Approved Spare Parts®**. This way, SEAT can guarantee that the product in question is suitable, reliable and safe. SEAT Authorised Service Centres have the necessary experience and facilities to ensure that parts are correctly and professionally installed.

Despite a continuous observation of the market, SEAT is not able to assess the reliability, safety and suitability of those parts **SEAT has not approved**. For this reason, SEAT cannot assume responsibility for any non-genuine parts used, even if these parts have been approved by an official testing agency or are covered by an official approval certificate.

Any **equipment subsequently installed** which has a direct effect on the vehicle and/or the way it is driven (e.g. cruise control system or electronically-controlled suspension) must be approved by SEAT and bear the **e** mark (the European Union's authorisation symbol).

If any **additional electrical components** are fitted so that they do not serve to control the vehicle itself (for instance a refrigerator box, laptop or ventilator fan, etc.), then they must bear the **CE** mark (European Union manufacturer conformity declaration).

WARNING

Accessories, for example telephone holders or drink holders, should never be fitted on the covers of, or within the working range of the airbags. Otherwise, there is a danger of injury if the airbag is triggered in an accident. ■

Technical modifications

Modifications must always be carried out according to our specifications.

Unauthorised modifications to the electronic components or software in the vehicle may cause malfunctions. Due to the way the electronic components are linked together in networks, other indirect systems may be affected by the faults. This can seriously impair safety, lead to excessive wear of components, and also invalidate your vehicle registration documents.

SEAT Authorised Service Centres cannot be held liable for any damage caused by modifications and/or work incorrectly performed.

For this reason, we recommend you that all work should be performed by an Authorised Service Centre using **genuine and SEAT® approved parts and accessories**.

WARNING

Incorrectly performed modifications or other kind of work on your vehicle can lead to malfunctions and cause accidents. ■

Mobile telephones and radiotelephones

First consult your Authorised Service Centre if you wish to use a mobile telephone or a two-way radio with a transmitting power output in excess of 10 watts. Here you will receive information concerning the technical possibilities for retrofitting this equipment.

Mobile telephones and two-way radios should be only fitted by a qualified workshop, for example an Authorised Service Centre.

WARNING

- **Always concentrate primarily on driving. If you are distracted while driving you could have an accident.**
- **Never attach the telephone mountings to the surfaces covering the airbag units or within the range of the airbags. There is a high danger of injury if the airbag is triggered.**

Note

Please observe the operating instructions of your mobile telephone / two-way radio. ■

Athermic windscreen*

Fig. 167 Location of the electronic toll collection system

Vehicles with an athermic windscreen have an area without athermic treatment above the rear-view mirror ⇒ fig. 167. This area has been designed for the operating of electronic components of fitted devices (e.g. electronic toll collection system).

Note

The customer should ensure that the electronic toll collection system is fitted in the correct area to make sure it works correctly. ■

Checking and refilling levels

Refuelling

The tank flap is released manually. The tank holds approximately 70 litres.

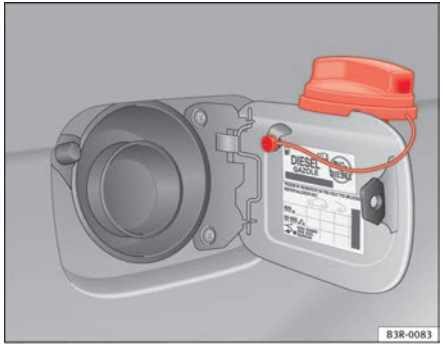

Fig. 168 Fuel tank flap with tank cap attached

The flap that covers the tank cap is unlocked and locked automatically by the central locking.

Unscrewing the tank cap

– Press the right side of the flap to open it.

– Unscrew the fuel tank cap anti-clockwise.

– Hook the cap onto the support fitted to the open tank flap ⇒ fig. 168.

Closing the tank cap

– Screw the tank cap clockwise into the filler opening until it you hear it click into position.

– Close the tank flap.

The tank flap is at the rear of the vehicle on the right.

If the automatic filler nozzle is operated correctly, it will switch itself off as soon as the tank is “full”. Never attempt to fill beyond this point, as this will fill the expansion chamber. Fuel may leak out if ambient conditions are warm.

The correct fuel grade for your vehicle is given on a sticker on the inside of the fuel tank flap. where further notes on fuel can be found.

WARNING

- **Fuel is highly inflammable and can cause serious burns and other injuries.**
  - **Never smoke or use any naked flame when filling the fuel tank of the vehicle, or a spare fuel canister, with fuel. This is an explosion hazard.**
  - **Follow legal requirements for the use of spare fuel canisters.**
  - **For safety reasons we do not recommend carrying a spare fuel canister in the vehicle. The canister could be damaged in an accident and leak.**
- **If, in exceptional circumstances, you have to carry a spare fuel canister, please observe the following points:**
  - **Never fill the spare fuel canister inside the vehicle or on it. An electrostatic charge could build up during filling, causing the fuel fumes to ignite. This may be fatally explosive. Always place the canister on the ground to fill it.**

WARNING (continued)

– **Insert the fuel nozzle into the mouth of the canister as far as possible.**

– **If the spare fuel canister is made of metal, the filling nozzle must be in contact with the canister during filling. This helps prevent an electrostatic charge building up.**

– **Never spill fuel in the vehicle or in the luggage compartment. Fuel vapours are explosive. Danger of death.**

Caution

- Fuel spills should be removed from the paintwork immediately.
- Never run the tank completely dry. An irregular fuel supply could cause misfiring. As a result, unburnt fuel could enter the catalytic converter and cause damage.
- When filling the fuel tank after having run it completely dry on a vehicle with a **diesel engine** the ignition must be switched on for at least 30 seconds without starting the engine. When you then start the engine it may take longer than normal (up to one minute) for the engine to start firing. This is due to the fact that the fuel system has to purge itself of air before starting.

For the sake of the environment

Do not try to put in more fuel after the automatic filler nozzle has switched off; this may cause the fuel to overflow if it becomes warm. ■

Releasing the tank flap manually

The tank flap can be released manually if the central locking system fails to operate.

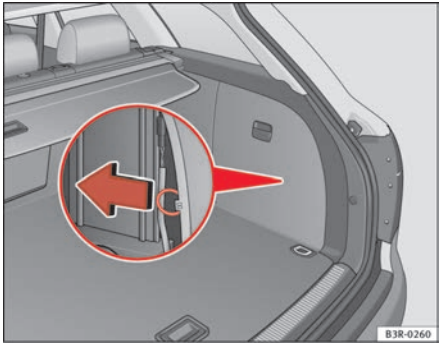

Fig. 169 Luggage compartment: Releasing the fuel tank flap by hand in case of emergency

– Open the tailgate.

– Open the cover in the right-hand side trim.

– Pull the ring to unlock the fuel tank flap ⇒ fig. 169. ■

Petrol

Petrol types

The recommended fuel types are listed on a sticker inside the fuel tank flap.

Only **unleaded petrol, corresponding to the standard DIN EN 228**, may be used for vehicles with catalytic converters (EN = “European Standard”).

Fuel types are differentiated by the **octane rating**, e.g: 91, 95, 98 RON (RON = “Regulation Octane Number, unit for determining the knock resistance of petrol”). You may use petrol with a higher octane number than the one recommended for your engine. However, this has no advantage in terms of fuel consumption and engine power.

The correct fuel type for your vehicle is given in the technical table for the engine. Section “Technical Data”

Caution

- Petrol that follows EN 228 may be mixed with small quantities of ethanol. However, the so-called “bioethanol fuels” available at commercial establishments, e.g. with reference E50 or E85, which contain a high percentage of ethanol, may **not** be used, as they will damage the fuel system.
- Even one tankful of leaded fuel would permanently impair the efficiency of the catalytic converter.
- High engine speed and full throttle can damage the engine when using petrol with an octane rating lower than the correct grade for the engine.

For the sake of the environment

Just one full tank of leaded fuel would seriously impair the efficiency of the catalytic converter. ■

Petrol additives

Petrol additives improve the quality of the petrol.

The quality of the petrol influences running behaviour, performance and service life of the engine. For this reason, you should use good quality petrol containing additives. These additives will help to prevent corrosion, keep the fuel system clean and prevent deposits from building up in the engine.

If good quality petrol with additives is not available or engine problems occur, the required additives must be added during refuelling. ■

Diesel

Diesel*

Diesel fuel must correspond to DIN EN 590 (EN = “European standard”). It must have a cetane number (CN) of at least 51. The cetane number indicates the ignition quality of the diesel fuel.

Notes on refuelling ⇒ page 216. ■

Biodiesel*

The biodiesel fuel must comply with the DIN EN 14.214 (FAME) Standard.

- Biodiesel is a methylester obtained from rapeseed oil.
- DIN is the German abbreviation for “**D**eutsches **I**nstitut für **N**ormung e.V.”, the German standards institute.
- EN means **E**uropean **N**orm.
- FAME is the English abbreviation for “**F**atty **A**cid **M**ethyl **E**ster”.

Your Authorised Service Centre can also be consulted to know if the vehicle has been prepared for biodiesel use.

Things to note about RME fuel (biodiesel)

- The performance of a vehicle using biodiesel maybe somewhat reduced.
- Fuel consumption of a vehicle using biodiesel may be slightly higher.
- RME fuel is resistant to the cold down to approx. -10°C.
- At temperatures below -10°C, we recommend using winter diesel fuel.
- Your vehicle is designed to be refuelled with up to a maximum of 7% blended biodiesel, in accordance with the DIN 51628 standard.

Caution

- RME fuel can damage the fuel system in vehicles which are not suitably adjusted.
- If you refuel with biodiesel, please be sure that it conforms to the DIN E 14.214 standard.
- If you use biodiesel that does not meet the required standard, the fuel filter could become clogged.

Note

- In case of low exterior temperatures and a fuel biodiesel percentage of higher than 50%, an increase in gas emission may occur during operation of the independent heating.
- The fuel filter may become clogged when fuel is changed to biodiesel. For this reason, we recommend you that, when having run 300 or 400 km after a fuel change, the fuel filter change must also be done. Also note the instructions in the Inspection and Maintenance plan.
- If the vehicle is to remain parked for more than about two weeks, we recommend filling the fuel tank with biodiesel and driving about 50 km in order to avoid damage to the injection system. ■

Winter driving

Diesel can thicken in winter.

Winter-grade diesel

When using summer-grade diesel fuel, difficulties may be experienced at sub-zero temperatures because the fuel thickens due to wax separation. Therefore, winter-grade diesel fuel is available in some countries during the cold months. It can be used at temperatures as low as -22°C.

In countries with different climatic conditions the diesel fuel generally sold has different temperature characteristics. Check with an Authorised Service Centre or filling stations in the country concerned regarding the type of diesel fuels available.

Filter pre-heater

Your vehicle is fitted with a fuel filter pre-heater, making it well equipped for operation in winter. This ensures that the fuel system remains operational to approx. -24°C, provided you use winter-grade diesel which is safe to -15°C.

However, if the fuel has waxed to such an extent that the engine will not start at temperatures of under -24°C, simply place the vehicle in a warm place for a while.

Caution

Do not mix fuel additives (“thinners”, or similar additives) with diesel fuel. ■

The bonnet

Releasing the bonnet

The bonnet is released from inside the vehicle.

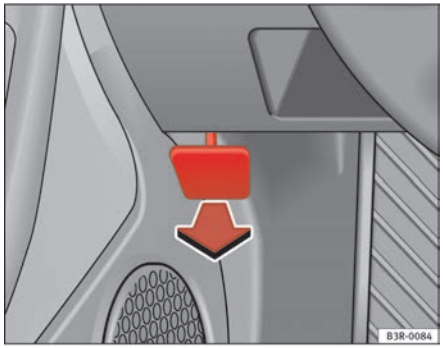

Fig. 170 Detail of foot-well area on driver's side: lever for unlocking the bonnet.

– To release the bonnet, pull the lever under the instrument panel ⇒ fig. 170 in the direction indicated (arrow).

The bonnet springs out of its lock. ■

Opening the bonnet

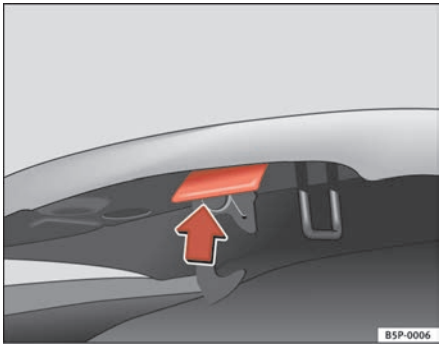

Fig. 171 Release catch under the bonnet

Before opening the bonnet make sure that the windscreen wiper arms are not lifted away from the glass. Otherwise the paint may be damaged.

– Lift the bonnet slightly ⇒ ⚠.

– Press the release catch under the bonnet upwards ⇒ fig. 171. This will release the arrester hook under the bonnet.

– Open the bonnet.

The bonnet is held in position by a gas-filled strut. ▶

WARNING

Never open the bonnet if you see steam or drips of coolant being released from the engine compartment. Failure to comply could result in burns. Wait until no steam or coolant can be seen before opening the bonnet. ■

Work in the engine compartment

Extra caution is necessary when working on components in the engine compartment.

Always be aware of the danger of injury and scalding as well as the risk of accident or even fire when working in the engine compartment (e.g. when checking and refilling fluids). Therefore, always observe the warnings listed below and follow all general safety precautions. The engine compartment of any motor vehicle is a potentially hazardous area ⇒ ⚠

WARNING

- **Switch the engine off.**
- **Remove the ignition key.**
- **Apply handbrake firmly.**
- **Place the gear lever into neutral.**
- **Wait for the engine to cool down.**
- **Children should not be allowed to approach the engine compartment**
- **Never spill liquids involved in vehicle operations on the engine compartment, as these may catch fire (e.g. anti-freeze containing liquid coolant).**
- **Take care not to cause short circuits in the electrical system, especially when working on the battery.**

WARNING (continued)

- **Never touch the radiator fan while the engine is hot, as the fan could start up suddenly.**
- **Never open the expansion tank when the engine is hot. The cooling system is under pressure.**
- **Protect face, hands and arms from any hot steam or hot liquid coolant released by covering the cap with a large, thick rag when opening the expansion tank.**
- **If any tests have to be performed with the engine running, there is an extra safety risk from the rotating parts, such as the drive belts, alternator and radiator fan, etc., and from the high-voltage ignition system.**
- **Observe the following additional warnings if work on the fuel system or the electrical system is necessary:**
  - **Always disconnect the battery.**
  - **Do not smoke.**
  - **Never work near open flames**
  - **Always keep an approved fire extinguisher immediately available.**

Caution

When topping up fluids, make sure the correct fluid is put into the correct filler opening. This can otherwise cause serious malfunctions or engine damage.

For the sake of the environment

Inspect the ground underneath your vehicle regularly so that any leaks are detected at an early stage. If you find spots of oil or other fluids, have your vehicle inspected in the garage. ▶

Note

On right-hand drive vehicles some of the containers/ reservoirs mentioned below are located on the other side of the engine compartment. ■

Closing the bonnet

– To close the bonnet, pull it down to overcome the spring pressure.

– Leave the bonnet secured in the locking part. *Do not tighten* ⇒ ⚠.

WARNING

- **For safety reasons the bonnet must always be completely closed when the vehicle is moving. After closing it always check that it is properly secured. The bonnet must be flush with the adjacent body panels.**
- **Should you notice that the bonnet is not safely secured when the vehicle is moving, stop the vehicle immediately and close the bonnet. Failure to do so could result in an accident.** ■

Engine oil

General notes

We recommend that the oil change should be performed by an Authorised Service Centre or a qualified workshop, according to the Maintenance Program.

The correct oil specifications for your engine are listed in the **Technical data** section ⇒ page 289.

Check that the specifications quoted (VW standards) appear on the container either singly or in combination with other specifications.

Flexible maintenance intervals (Extended Service Intervals*)

Special lubricating oils ⇒ page 223 have been developed in the framework of the SEAT “Extended Service Intervals” ⇒ Booklet “Maintenance Program”

This type of oil **must** be used if you intend to take advantage of the prolongation of the maintenance intervals in the framework of the “Extended Service Intervals” program.

- Do not mix the LongLife oil with oil intended for fixed service intervals, as the requirements for the extended service intervals are then no longer guaranteed.
- Only in exceptional circumstances, if the engine oil level is too low ⇒ page 224 and LongLife oil is not available, it is permitted to top up (once) with oil for **fixed service intervals** ⇒ page 223 (up to a maximum of 0.5 litres).

Fixed service intervals*

If “Extended Service Intervals” are not applied to your vehicle, you can use oils for **fixed service intervals** ⇒ page 223. In this case, your vehicle must be serviced after a fixed interval of 1 year / 15,000 km (10,000 miles) (see the Maintenance Program).

- In exceptional circumstances, if the engine oil level is too low ⇒ page 224 and you cannot obtain the oil specified for your vehicle, you can put in a small quantity of oil conforming to the specification ACEA A2 or ACEA A3 (petrol engines) or ACEA B3 or ACEA B4 (diesel engines) (up to 0.5l).

Vehicles with diesel particulate filter*

The Maintenance Program states whether your vehicle is fitted with a diesel particulate filter. ▶

- Vehicles with a diesel particulate filter must **only** be filled with **VW 507 00** engine oil.
- Avoid mixing this oil with other engine oils.
- Only in exceptional circumstances, if the engine oil level is too low ⇒ page 224 and you cannot obtain the oil specified for your vehicle, can you put in a small quantity of oil (once) conforming to the VW 506 00, VW 506 01, VW 505 00, VW 505 01 or ACEA B3 / ACEA B4 specification. (up to 0.5l). ■

Oil properties

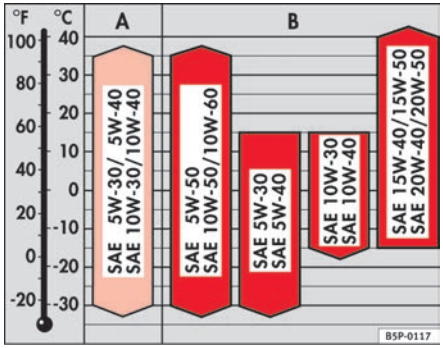

Fig. 172 Types of oil according to temperature

Viscosity

The viscosity class of the oil is selected according to the diagram.

When the ambient temperature falls outside the limits of the scale for a short period, an oil change is not required.

Engine type	Specification
Petrol	VW 501 01/ VW 502 00/ VW 503 00/VW 503 01/ VW 504 00
Diesel Engines with Particulate filter (DPF)[a)]	VW 507 00

a) Only use recommended oils, otherwise you may damage the engine.

Extended Service Intervals*	
Engine type	**Specification**
Petrol	VW 503 00/VW 503 01/ VW 504 00
Diesel	VW 507 00

Mono-grade oil

Single grade oils are generally not suitable for all year round use, due to ranges of viscosity[3)].

These oils are only useful in a climate that is constantly very cold or very warm.

Engine oil additives

No type of additive should be mixed with the engine oil. The deterioration caused by these additives is not covered by the warranty.

Note

Before a long trip, we recommend finding an engine oil that conforms to the corresponding VW specifications and keeping it in the vehicle. This way, the correct engine oil will always be available for a top-up if needed. ■

3) Viscosity: oil density

Checking the oil level

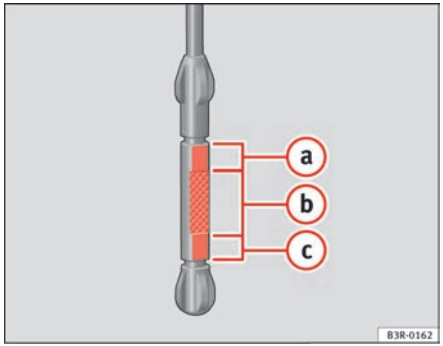

Fig. 173 Markings on oil dipstick

Checking oil level

- Park the vehicle in a horizontal position.
- Briefly run the engine at idle speed until the service temperature is reached then stop.
- Wait two minutes.
- Pull out the dipstick. Wipe the dipstick with a clean cloth and insert it again, pushing it in as far as it will go.
- Then pull it out once more and check the oil level ⇒ fig. 173. If the oil level is too low, add more engine oil ⇒ page 224.

Oil level in area (a)

- Do *not* top up oil.

Oil level in area (b)

- Oil *can* be topped up. *After topping up* the oil level should be in area (a).

Oil level in area (c)

- Oil *must* be topped up. *After topping up* the oil level should be in area (a).

Depending on how you drive and the conditions in which the car is used, oil consumption can be up to 0.5 l/1,000 km. Oil consumption is likely to be higher for the first 5,000 km. Therefore, the engine oil level must be checked at regular intervals, preferably when filling the tank and before a journey. ■

Topping up the engine oil

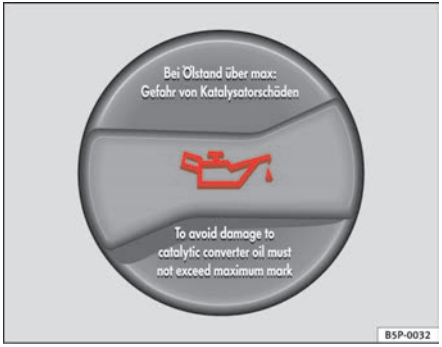

Fig. 174 In the engine compartment: Engine oil filler cap

- Unscrew cap from oil filler opening ⇒ page 289, fig. 240. ▶

– Carefully put in the specified grade of oil ⇒ page 289, adding 0.5 litres at a time.

– After two minutes, check the oil level once again ⇒ page 224.

– Where necessary, add more engine oil.

– Replace the oil filler cap carefully and push the dipstick all the way in.

WARNING

- **When refilling with oil, make sure no oil falls onto hot engine parts. Failure to comply could result in fire.**
- **Wash your skin thoroughly if it comes into contact with engine oil.**

Caution

- The oil level must never be above area (a). This could damage the catalytic converter or the engine. Contact a specialist garage to drain the engine oil if necessary.
- No additives should be used with engine oil. Any damage caused by the use of such additives would not be covered by the factory warranty.

For the sake of the environment

- Oil must not be disposed of into the drains or onto the ground.
- Always observe legal requirements when disposing of empty oil canisters. ■

Cooling system

Liquid coolant

The purpose of the liquid coolant is to carry heat away from the engine. The correct amount of antifreeze is decisive in preventing the cooling system from freezing in winter.

The your vehicle's engine cooling system is filled for life at the factory, so no coolant needs to be changed. The liquid coolant consists of a mixture of water and anti-freeze G12++. This is a glycol-based antifreeze with anti-corrosion additives.

Liquid coolant additive

The amount of antifreeze required depends on the temperatures to be expected in the winter season. If the antifreeze concentration is too low the coolant can freeze, resulting in failure of the cooling system and heater.

The cooling system is filled at the factory with the correct amount of anti-freeze for the country concerned.

In most cases, the mixture consists of 60% water and **40% anti-freeze**. This mixture gives the required anti-freeze protection at temperatures down to -25°C and particularly protects the metal parts of the cooling system against corrosion. It also prevents scaling and significantly raises the boiling point of the liquid coolant.

Countries with warm climate

The liquid coolant concentration must not be reduced by adding plain water, even in the summer or in warm climates. The concentration of the anti-freeze must always be **at least** 40%.

Countries with cold climate

If greater frost protection is required in very cold climates, the proportion of the anti-freeze G12++ can be increased. A concentration of 60% offers anti-

freeze protection of temperatures down to approx. -40°C. However, the concentration of anti-freeze **must not exceed 60%**, as the anti-freeze protection would then drop and the performance of the coolant system would suffer.

Vehicles for countries with cold climates (e.g. Sweden, Norway and Finland) have factory-filled anti-freeze protection for temperatures down to -35°C. In these countries, the concentration of anti-freeze should always be at least 50%.

Caution

- It is advisable to have the cooling system checked before the winter season to make sure that the antifreeze concentration is adequate for the conditions to be expected. This applies particularly if you intend to take the car into a colder climate zone. If necessary, have the antifreeze concentration increased to 50 - 60% as required.
- Use only anti-freeze G12++ , an additive meeting the “TL-VW 774G” specification. Other anti-freezes may give considerably inferior corrosion protection. The damage caused by the use of these anti-freezes may lead to a loss of liquid coolant, causing serious damage to the engine.
- The anti-freeze G12++ can be mixed only with anti-freeze additives G11, G12 and G12+. ■

Checking the liquid coolant level

The liquid coolant level can be checked at a glance.

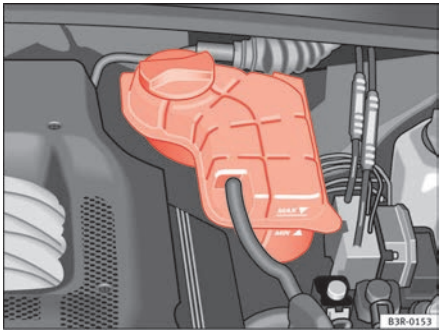

Fig. 175 Engine compartment: Liquid coolant deposit

– Switch the ignition off.

– Check the coolant level on liquid coolant expansion tank ⇒ fig. 175. When the engine is cold, it should be between the “min” and “max” marks. When the engine is hot, it may be slightly above the “max” mark.

Its location is shown in the corresponding general overview of the engine compartment.

The liquid coolant level should be checked with the engine switched off.

The liquid coolant level is monitored by a warning lamp in the instrument panel ⇒ page 78. However, we recommend that it should be checked occasionally.

Liquid coolant losses

Any loss of liquid coolant normally indicates a **leak** in the cooling system. In this case the cooling system should be inspected by a specialist garage without delay. It is not sufficient merely to top up the liquid coolant.

If there are **no leaks** in the system, a loss of liquid coolant can only occur if the coolant boils and is forced out of the system as a result of overheating.

Caution

Radiator sealants must not be added to the liquid coolant. Such additives could seriously impair the function of the cooling system. ■

Topping up the liquid coolant

Be careful when topping up with liquid coolant.

– Switch the engine off.

– Wait for the engine to cool down.

– Cover the cap on the expansion tank ⇒ page 226, fig. 175 with a cloth, and **carefully** unscrew the cap anti-clockwise ⇒ ⚠.

– Add liquid coolant.

– Screw on the cap *tightly*.

Make sure that the liquid coolant meets the required specifications ⇒ page 225, “Liquid coolant”. Do not use a different type of anti-freeze if anti-freeze G12++ is not available. In this case, use only water and bring the anti-freeze concentration back up to the correct level as soon as possible.

Always top up with *new* liquid coolant.

Do not fill above the “max” mark. Excess liquid coolant is forced out of the system through the valve in the filler cap when the engine gets hot.

If a lot of liquid coolant has been lost, wait for the engine to *cool down* before putting in cold coolant. Failure to do so could result in serious engine damage.

WARNING

- **The cooling system is under pressure. Do not unscrew the cap on the expansion tank when the engine is hot. Failure to comply could result in burns.**
- **The anti-freeze and liquid coolant can be a health hazard. Therefore, the anti-freeze should be stored in the original container in a safe place out of reach of children. Failure to comply could result in poisoning.**

For the sake of the environment

Drained off coolant should not be used again. Drain off the used coolant into a suitable container and dispose of it in the proper manner (observe environmental regulations). ■

Radiator fan

The radiator fan can start running spontaneously.

The auxiliary fan can continue to run for as long as 10 minutes after stopping the engine – even after the ignition is switched off. It may also start running suddenly ⇒ ⚠ after some while if

- stored heat raises the coolant temperature, or
- the hot engine compartment is additionally heated up by the sun.

WARNING

when working in the engine compartment be aware that the radiator fan may start running suddenly, leading to the risk of injury. ■

Washer fluid and windscreen wiper blades

Windscreen washer system

Plain water on its own is not sufficient for the windscreen washer system.

Fig. 176 In the engine compartment: Cap of windscreen washer fluid reservoir.

The container for the windscreen washer contains the cleaning fluid for the windscreen and the headlight washer system*. The container is located in the engine compartment (front left). The filler cap is marked with the symbol ⇒ fig. 176.

The **capacity** of the container is listed in ⇒ page 289.

Plain water on its own is not enough to clean the glass properly. It is therefore advisable to add a suitable washer fluid additive (with wax solvent) to the water. A washer fluid with freeze-resistant additive should be used in winter.

Caution

- Never put radiator anti-freeze or other additives into the windscreen washer fluid.
- Never use washer fluid which contains paint thinners or solvents as it can damage the paintwork. ■

Changing windscreen wiper blades

If the windscreen wiper blades are in perfect condition, you will benefit from an improved visibility. Damaged wiper blades should be replaced immediately.

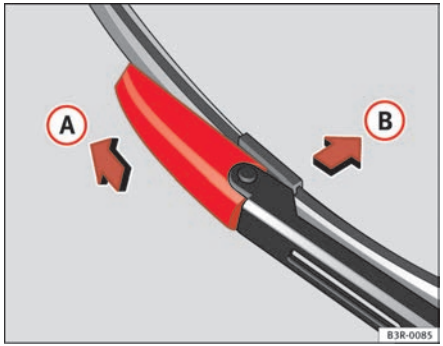

Fig. 177 Removing the wiper blade

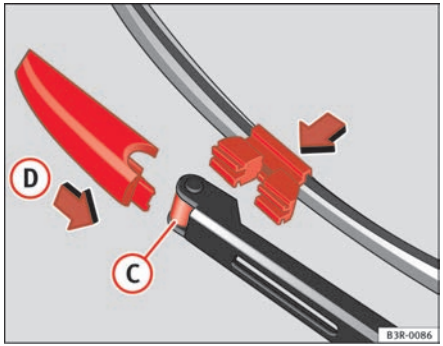

Fig. 178 Fitting the wiper blade

Removing the wiper blade

– Lift the wiper arm away from the windscreen.

– Slide the retainer catch on the wiper blade in the direction indicated ⇒ fig. 177 (A). Hold onto the wiper blade at the same time.

– Pull the wiper blade (B) out of its mounting on the wiper arm.

Fitting the wiper blade

– Slide back the retainer catch on the new wiper blade. The mounting on the wiper blade should now be visible.

– Fit the new wiper blade into the mounting on the wiper arm ⇒ fig. 178 (C).

– Slide the retainer catch on the wiper blade in direction (D) so that it clicks into place on the wiper arm.

– Fold the wiper arm back down onto the glass.

If the **windscreen wipers smear**, they should be replaced if they are damaged, or cleaned if they are soiled.

If this does not produce the desired results, the setting angle of the windscreen wiper arms might be incorrect. They should be checked by a qualified workshop and corrected if necessary.

⚠ WARNING

Do not drive unless you have good visibility through all windows!

- **The ignition must not be switched on while the front wiper arms are in a raised position. The wipers would return to their park position and damage the paintwork on the bonnet.**

WARNING (continued)

- **To prevent smearing on the windscreen, the wiper blades should be cleaned regularly using a window cleaner solution. If the wiper blades are very dirty (e.g. insects etc.), they should be cleaned using a sponge or cloth. Failure to do so could result in an accident.**
- **For safety reasons, the wiper blades should be changed once or twice a year.**

Caution

- Damaged or dirty windscreen wipers could scratch the windscreen.
- Never use fuel, nail varnish remover, paint thinner or similar products to clean the windows. This could damage the windscreen wiper blades.
- Never move the windscreen wiper or windscreen wiper arm manually. This could cause damage.
- Do not pull the windscreen wipers forward unless they are in the service position. Otherwise the bonnet could be damaged.

Note

- The wiper arms can be moved to the service position only when the bonnet is properly closed. ■

Changing the rear wiper blade

A rear wiper blade in perfect condition is essential for clear rear vision. Damaged wiper blades should be replaced immediately.

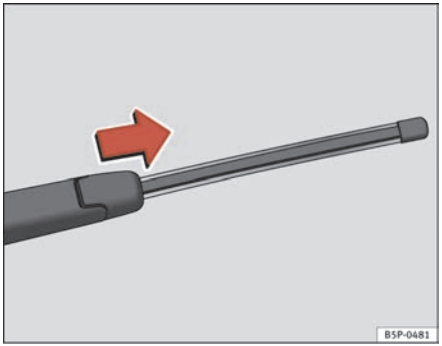

Fig. 179 Remove rear window wiper blade

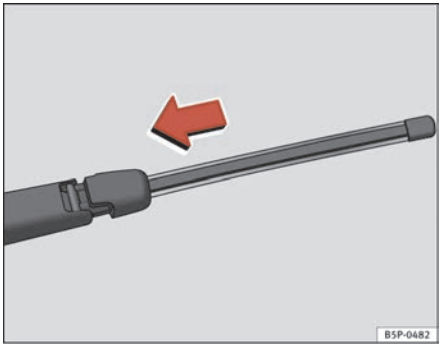

Fig. 180 Fit the rear window wiper blade

Removing the wiper blade

– Lift the wiper arm away from the glass ⇒ page 230, fig. 179.

– Slide the blade adapter in the direction of the arrow and remove the blade ⇒ page 230, fig. 179.

Fitting the wiper blade

– With one hand, hold the top end of the wiper arm.

– Place the blade as shown in the ⇒ page 230, fig. 180 and slide the adapter along until it engages.

Check the condition of the wiper blade regularly. Change as required.

If the **windscreen wiper scrapes**, it should be replaced if damaged, or cleaned if soiled.

If this is not sufficient, refer to a qualified workshop.

WARNING

Do not drive unless you have good visibility through all windows!

- **Clean the windscreen wiper blades and all windows regularly.**
- **The wiper blades should be changed once or twice a year.**

Caution

- A damaged or dirty window wiper could scratch the rear window.
- Never use fuel, nail varnish remover, paint thinner or similar products to clean the window, as they could damage the wiper blades.
- Never move the windscreen wiper by hand. This could cause damage. ■

Brake fluid

Checking the brake fluid level

The brake fluid level can be checked at a glance.

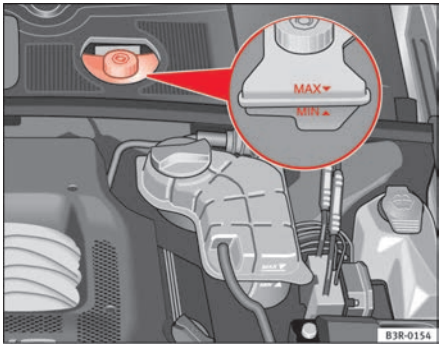

Fig. 181 Engine compartment: markings on brake fluid reservoir

The brake fluid level must be between the “Min” and “Max” ⇒ fig. 181 markings.

The fluid level may drop *slightly* after a period of time due to the automatic compensation for brake pad wear. This is quite normal.

However, if the level goes down noticeably in a *short* time, or drops below the “Min” mark, there may be a leak in the brake system. If the fluid level in the reservoir is too low, this will be indicated by the brake warning lamp ⇒ page 70 and ⇒ page 77. If this should happen, **take the car to a qualified workshop immediately** and have the brake system inspected. ■

Topping up and changing the brake fluid

It is best to have the brake fluid changed by a professional.

Brake fluid absorbs damp. Therefore, in the course of time it will absorb water from the ambient air. If the water content in the brake fluid is too high, the brake system could corrode. In addition, the boiling point of the brake fluid will be considerably reduced. This could adversely affect the braking ability in certain circumstances.

For this reason the brake fluid must be changed periodically.

Your vehicle's Service Schedule will tell you when the brake fluid has to be renewed.

We recommend you have the brake fluid changed as part of a regular Inspection Service at your garage. They are familiar with the procedure and have the necessary special tools and spare parts as well as the proper facilities for disposing of the old fluid.

Use only the genuine brake fluid specified by the factory Specialist garages know that the brake fluid -DOT 4- is factory approved. The brake fluid must be new.

WARNING

- **Therefore, it must always be kept closed in its original container. Keep out of the reach of children. Failure to comply could result in poisoning.**
- **Heavy use of the brakes may cause a vapour lock if the brake fluid is left in the system for too long. This would seriously affect the efficiency of the brakes and the safety of the car, leading to the risk of accident.**

Caution

Please note that brake fluid will attack the paintwork on contact.

For the sake of the environment

If the fluid has to be drained out of the brake system, use an appropriate container to catch the used brake fluid and dispose of it in the proper manner. ■

Battery

General notes

All work on batteries requires specialist knowledge.

The battery is virtually maintenance-free and is checked in the Inspection Services.

We recommend that you replace a battery once it is older than 5 years.

Disconnecting the battery

If the battery is disconnected, some of the vehicle's functions will become inoperative (e.g. electric windows). These functions will require resetting after the battery is reconnected. For this reason, the battery should only be disconnected from the vehicle's electrical system when absolutely necessary.

Long periods of non-use

The battery will gradually lose its charge because certain electrical equipment continues to draw current even when the ignition is off. If you park the vehicle for long periods of time in **winter** you should take the battery out of the vehicle and keep it in a frost-proof room. Store the battery in a place where it cannot “freeze up” and become damaged. At **warm** outside temperatures it is sufficient to disconnect the negative terminal of the battery. Even when the battery is not connected you should charge it from time to time. ▶

Winter operations

The battery is drained more in cold weather, which means that the starting power is reduced. For this reason, have the battery checked and charged if necessary before the start of winter.

Replacing the battery

A replacement battery **must** have the same capacity, voltage and current rating. It must also have the same dimensions as the original, factory-fitted battery and have sealed caps. The SEAT batteries which have been specially developed fulfil the maintenance, performance and safety specifications for your vehicle.

We recommend you use maintenance-free batteries.

WARNING

- **All work on batteries requires specialist knowledge. If work is required on the battery, this should be performed by a Technical Service or specialist garage. Danger of caustic burns and explosion!**
- **The battery must not be opened. Never try to change the battery's liquid level. Explosive gas is released from the battery that could lead to an explosion.**

Caution

- The battery holder and clamps must always be correctly secured.
- Before starting any work on the battery, always observe the **warnings** listed under ⇒ ⚠.

For the sake of the environment

Batteries contain toxic substances including sulphuric acid and lead. Therefore, they must be disposed in line with environmental regulations and must not be disposed of with ordinary household waste. Make sure disconnected batteries cannot tip over. Sulphuric acid could be spilt! ■

Important safety warnings for handling a car battery

The battery is located at the back of the engine compartment ⇒ page 289.

	Wear eye protection
	Battery acid is very corrosive and caustic. Wear protective gloves and eye protection!
	Fires, sparks, naked lights and smoking are prohibited!
	A highly explosive mixture of gases is released when the battery is under charge.
	Keep children away from acid and batteries!

WARNING

Always be aware of the danger of injury and chemical burns as well as the risk of accident or fire when working on the battery and the electrical system:

- **Wear eye protection. Protect your eyes, skin and clothing from acid and particles containing lead.**
- **Battery acid is very corrosive and caustic. Wear protective gloves and eye protection. Do not tilt the batteries. This could spill acid through the vents. Rinse battery acid from eyes immediately for several minutes with clear water. Then seek medical care immediately. Neutralize any acid splashes on the skin or clothing with a soapy solution, and rinse off with plenty of water. If acid is swallowed by mistake, consult a doctor immediately.**
- **Fires, sparks, naked lights and smoking are prohibited. When handling cables and electrical equipment, avoid causing sparks and electrostatic charge. Never short the battery terminals. High-energy sparks can cause injury.**

WARNING (continued)

- **A highly explosive mixture of gases is released when the battery is under charge. The batteries should be charged in a well-ventilated room only.**
- **Keep children away from acid and batteries.**
- **Before working on the electrical system, you must switch off the engine, the ignition and all consumers. The negative cable on the battery must be disconnected. When a light bulb is changed, you need only switch off the light.**
- **Deactivate the anti-theft alarm by unlocking the vehicle before you disconnect the battery! The alarm will otherwise be triggered.**
- **When disconnecting the battery from the vehicle electrical system, disconnect first the negative cable and then the positive cable.**
- **Switch off all electrical consumers before reconnecting the battery. Reconnect first the positive cable and then the negative cable. Never reverse the polarity of the connections. This could cause an electrical fire.**
- **Never charge a frozen battery, or one which has thawed. This could result in explosions and chemical burns. Always replace a battery which has frozen. A flat battery can freeze at temperatures around 0°C.**
- **Ensure that the vent hose is always connected to the battery.**
- **Never use a defective battery. This may be fatally explosive. Replace a damaged battery immediately.**

Caution

- Never disconnect the battery if the ignition is switched on or if the engine is running. This could damage the electrical system or electronic components.
- Do not expose the battery to direct sunlight over a long period of time, as the intense ultraviolet radiation can damage the battery housing.
- If the vehicle is left standing in cold conditions for a long period, protect the battery from frost. If it “freezes” it will be damaged. ■

Charging the battery

A fully-charged battery is important for reliable starting.

– Note the warnings ⇒ ⚠ in “Important safety warnings for handling a car battery” on page 233 and ⇒ ⚠.

– Switch off the ignition and all electrical equipment.

– Only if “fast-charging”: both battery cables must be disconnected (first the “negative” cable, then the “positive” cable).

– Connect the charger cables to the battery terminals, noting the colour code (red is used for “positive”, black or brown for “negative”).

– Now connect the battery charger to the power point and switch on.

– After charging the battery: switch off the battery charger and disconnect the power point cable.

– Finally disconnect the charger cables from the battery.

– If necessary, reconnect both battery cables to the battery (first the “positive” cable, then the “negative” cable).

When charging with a *low* current (for instance with a **small battery charger**) the battery does not normally have to be disconnected. However, both battery cables must be disconnected before **“fast-charging”** the battery with a *high* current. However, always follow the instructions given by the manufacturer of the battery charger.

The *fast-charging* procedure for a battery is **dangerous** ⇒ ⚠ in “Important safety warnings for handling a car battery” on page 233, as it requires a ▶

special charger and the corresponding level of knowledge. We therefore recommend that this work should only be performed by a specialist garage.

A flat battery can **freeze** at temperatures of around 0°C. The battery must be defrosted before charging ⇒ ⚠. It is advisable to replace the battery if it has frozen, because the ice can crack the battery casing and allow the battery acid to escape.

The battery caps should not be opened while the battery is being charged.

⚠ WARNING

Never charge a frozen battery. Failure to comply could result in an explosion. ■

Wheels and tyres

Wheels

General notes

Avoiding damage

- If you have to drive over a kerb or similar obstacle, drive very slowly and as near as possible at a right angle to the kerb.
- Keep grease, oil and fuel off the tyres.
- Inspect the tyres regularly for damage (cuts, cracks or blisters, etc.). Remove any foreign objects embedded in the treads.

Storing tyres

- Mark tyres when you remove them to indicate the direction of rotation. This ensures you will be able to install them correctly when you replace them.
- When removed, the wheels and/or tyres should be stored in a cool, dry and preferably dark location.
- Store tyres in a vertical position if they are not fitted on wheel rims.

New tyres

New tyres have to be run in ⇒ page 189.

The tread depth of new tyres may vary, according to the type and make of tyre and the tread pattern.

Concealed damage

Damage to tyres and rims is often not readily visible. If you notice unusual vibrations or the car pulling to one side, this may indicate that one of the tyres is damaged. The tyres should be checked immediately by an Authorised Service Centre.

Tyres with directional tread pattern

An arrow on the tyre sidewall indicates the direction of rotation on tyres with directional tread. Always observe the direction of rotation indicated when fitting the wheel. This guarantees optimum grip and helps to avoid aquaplaning, excessive noise and wear.

WARNING

- **New tyres do not have maximum grip in the first 500 km. Drive particularly carefully to avoid risk of accident.**
- **Never drive with damaged tyres. This may cause an accident.**
- **If you notice unusual vibration or if the vehicle pulls to one side when driving, stop the vehicle immediately and check the tyres for damage.** ■

Checking tyre pressure

The correct tyre pressure can be seen on the sticker on the inside of the tank flap.

1. Read the required tyre inflation pressure from the sticker. The values refer to Summer tyres. For Winter tyres, you must add 0.2 bar to the values given on the sticker. ▶

2. The tyre pressures should only be checked when the tyres are cold. The slightly raised pressures of warm tyres must not be reduced.

3. Adjust the tyre pressure to the load you are carrying.

Tyre pressure

The correct tyre pressure is especially important at high speeds. The pressure should therefore be checked at least once a month and before starting a journey.

The sticker with the tyre pressure values can be found on the inside of the tank flap. The tyre pressure values given are for cold tyres. Do not reduce the slightly raised pressures of warm tyres ⇒ ⚠.

WARNING

- **Check the tyre pressure at least once per month. Checking tyre pressure value is very important. If the tyre pressure is too high or too low, there is an increased danger of accidents - particularly at high speeds.**
- **A tyre can easily burst if the pressure is too low, causing an accident!**
- **At continuously high speeds, a tyre with insufficient pressure flexes more. In this way it becomes too hot, and this can cause tread separation and tyre blow-out. Always observe the recommended tyre pressures.**
- **If the tyre pressure is too low or too high, the tyres will wear prematurely and the vehicle will not handle well. Risk of accident!**

For the sake of the environment

Under-inflated tyres will increase fuel consumption. ■

Tyre pressure monitoring

The tyre pressure monitoring system constantly checks the pressure of the tyres.

The system warns the driver in the event of a loss of pressure by means of symbols and messages in the instrument cluster display.

Note that tyre pressure also depends on tyre temperature. Tyre pressure increases about 0.1 bar for each 10°C in tyre temperature increase. The tyre heats up while the vehicle is being driven and the tyre pressure will rise accordingly. For this reason, you should only adjust the tyre pressures when they are cold (i.e. approximately at ambient temperature).

To ensure that the tyre pressure monitoring system works reliably, you should check and, if necessary, adjust the tyre pressures at regular intervals and store the correct pressures (reference values) in the system.

A tyre pressure information label is attached to the inside of the fuel tank flap.

WARNING

- **Never adjust tyre pressure when the tyres are hot. This may damage or even burst the tyres. Risk of accident!**
- **An insufficiently inflated tyre flexes a lot more at high speeds and causes significant heating of the tyre. Under these conditions, the tyre bead may be released or the tyre may burst. Risk of accident!**

For the sake of the environment

Under-inflated tyres lead to increased fuel consumption and tyre wear. ■

Significant tyre pressure loss

The tyre symbol (!) is displayed and indicates that the tyre pressure for a least one tyre is insufficient.

- Stop the vehicle.

- Switch the engine off.

- Check the tyre(s).

- Change the wheel if necessary. ■

Tyre pressure monitoring (RKA+)*

The type pressure monitor display on the instrument panel indicates that the pressure is too low.

Fig. 182 Detailed view of the centre console: Button for the tyre pressure monitoring system

The tyre pressure monitoring system makes use of the ABS sensors to compare the rolling circumference and the frequency characteristics of the wheels. If the rolling circumference or frequency characteristic changes on one or more wheels, the tyre pressure warning lamp (!) will light up. The fault will also be indicated by a warning buzzer. The position of the affected tyre will also be shown (if only one tyre is affected) on the centre display of the instrument panel.

The rolling circumference and frequency characteristics can change if:

- the tyre pressure is too low.
- the tyre has suffered structural damage.
- the wheels or the inflation pressures have been changed without initialising the system (see Adjusting the tyre pressure settings).
- there is a greater load on the wheels of one axle (e.g. if you are carrying more passengers or luggage).
- the road surface under the left wheels is different to the road surface under the right wheels for a long period.
- when driving with snow chains.

Adjusting the tyre pressure settings (initialising the tyre pressure monitoring system)

After any incident regarding the wheels of your vehicle, e.g. after modify the tyre pressure ⇒ page 239 or after changing of swapping around wheels ⇒ page 180 - with the vehicle at a standstill and the engine running - press ⇒ fig. 182. The yellow warning lamp (!) will light up. Hold the button down for 2 seconds until the warning lamp goes out and an acoustic warning is given. You can now release the button.

If the wheels are subjected to extremely stress (e.g. heavy load), the tyre pressure must be increased to the recommended value for the maximum load (see the adhesive label on the inside of the fuel tank flap) and then initialise the system.

Tyre pressure warning lamp on

When you switch on the ignition, the tyre pressure warning lamp (!) will light up for about 2 seconds. There is a fault in the system if the indicator stays on permanently after switching on the ignition. The instrument panel also ▶

display TMPS (Tyre Pressure Monitoring System). Please contact the nearest specialist garage as soon as possible.

The tyre pressure warning lamp (!) lights up if the tyre pressure on one or more wheels is significantly lower than the tyre pressure setting which was confirmed by the driver ⇒ ⚠.

WARNING

- **If the tyre pressure warning lamp lights up (!) you must slow down immediately and avoid any severe braking or steering manoeuvres. Stop the vehicle as soon as possible and check the tyres and their pressure.**
- **The driver is responsible for maintaining correct tyre pressures. Therefore, the tyre pressure must be regularly checked.**
- **Under certain conditions (e.g. driving at high speeds, on ice and snow or on poor road surfaces) the tyre pressure warning lamp (!) may not light up immediately or not at all.**
- **Please ask your Dealer or specialist garage whether run-flat tyres can be used on your vehicle. Fitting this type of tyre in an undue manner could lead to your driving licence being taken away from you. Furthermore, it may led to damage to the vehicle or, under certain circumstances, may cause accidents.**
- **If you change normal tyres for run-flat tyres or vice versa, the control unit must be reprogrammed by the Dealer or a specialist garage.**

Note

If you did **not** press the button for the tyre pressure monitoring system to confirm a new tyre pressure setting after making changes to the tyre pressures or changing one or more wheels, the warning lamp (!) may light up although the tyre pressures are correct. In this case, stop the vehicle as soon as possible and, after examining the tyres, press the button for the tyre pressure monitoring system. ■

Tyre service life

The service life of tyres is dependent on tyre pressure, driving style and fitting.

Fig. 183 Tyre tread wear indicators

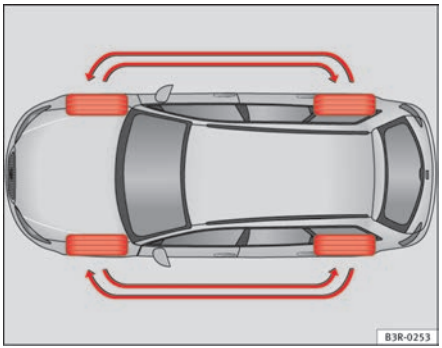

Fig. 184 Diagram for changing wheels

Wear indicators

The original tyres on your vehicle have 1.6 mm high “tread wear indicators” ⇒ page 239, fig. 183, running across the tread. Depending on the make, there will be six to eight of them evenly spaced around the tyre. Markings on the tyre sidewall (for instance the letters “TWI” or other symbols) indicate the positions of the tread wear indicators. The minimum tread depth required by law is 1.6 mm (measured in the tread grooves next to the tread wear indicators). Worn tyres must be replaced. Different figures may apply in export countries ⇒ ⚠.

Tyre pressure

Under-inflation or over-inflation will reduce the life of the tyres considerably and also impair the car's handling. The inflation pressures are listed on a sticker on the inside of the fuel tank flap.

Correct inflation pressures are very important, especially at **high speeds**. The pressure should therefore be checked at least once a month and before starting any long journey.

Tyre pressure monitoring (RKA+)*

Monitoring of the tyre pressures is based on the tyre pressures you have stored. The tyre pressure monitoring system cannot function as intended if you store tyre pressure settings for a normal load, but then drive with the vehicle fully laden. The tyre pressure must be adapted to the actual load and stored accordingly in the tyre pressure monitoring system ⇒ page 238.

Driving style

Fast cornering, heavy acceleration and hard braking all increase tyre wear.

Changing wheels around

If the front tyres are worn considerably more than the rear ones it is advisable to change them around as shown ⇒ page 239, fig. 184. All the tyres will then last for about the same time.

Wheel balance

The wheels on new vehicles are balanced. However, various factors encountered in normal driving can cause them to become unbalanced, which results in steering vibration.

Unbalanced wheels should be rebalanced, as they otherwise cause excessive wear on steering, suspension and tyres. A wheel must also be rebalanced when a new tyre is fitted.

Incorrect wheel alignment

Incorrect wheel alignment causes excessive tyre wear, impairing the safety of the vehicle. If tyres show excessive wear, you should have the wheel alignment checked by an Authorised Service Centre.

⚠ WARNING

There is a serious danger of accidents if a tyre bursts during driving!

- **The tyres must be replaced at the latest when the tread is worn down to the tread wear indicators. Failure to do so could result in an accident. Worn tyres do not grip well at high speeds on wet roads. There is also a greater risk of “aquaplaning”**
- **At continuously high speeds, a tyre with insufficient pressure flexes more. This causes it to overheat. This can cause tread separation and tyre blow-out. Risk of accident. Always observe the recommended tyre pressures.**
- **If tyres show excessive wear, you should have the running gear checked by an Authorised Service Centre.**
- **Keep chemicals such as oil, fuel and brake fluid away from tyres.**
- **Damaged wheels and tyres must be replaced immediately!**

For the sake of the environment

Under-inflated tyres will increase fuel consumption. ■

Anti-puncture tyres*

Anti-puncture tyres allow you to continue driving even with a punctured tyre, in the majority of cases.

Vehicles equipped with anti-puncture[4)] tyres from the factory indicate the loss of tyre pressure on the instrument panel.

Driving with anti-puncture tyres (emergency gear)

– Leave the ESP/TCS (electronic stabilisation programme) switched on, or switch on ⇒ page 68.

– Continue driving carefully and slowly (80 km/h maximum).

– Avoid sudden manoeuvres and sharp turns.

– Avoid driving over obstacles (for example kerbs) or potholes.

– Look out for the ESP/TCS intervening often, smoke coming from the tyres or the smell of rubber, the vehicle vibrating or a clattering noise. If any of these occur, stop the vehicle.

The anti-puncture tyres have a tag on the side of the tyre, with the description: “DSST”, “Eufonia”, “RFT”, “ROF”, “RSC”, “SSR” or “ZP”.

The sides of this type of tyre are reinforced. When the tyres lose air they are supported on the sides (emergency driving).

The loss of pressure in the tyre is shown on the instrument panel. You can then drive a maximum of 80 km and if the circumstances are favourable (for example, low load), even more.

The damaged tyre should be changed as soon as possible. The rim should be checked in a specialist workshop to detect possible damage and replace it if necessary. We recommend you contact Technical Service. If more than one tyre is being used under emergency conditions, this reduces the distance which can be travelled.

Starting driving in emergency conditions

When loss in tyre pressure is displayed on the instrument panel, this means that at least one tyre is being driven in emergency conditions ⇒ ⚠.

End of emergency operation

Do not drive on if:

- smoke is coming from one of the tyres,
- there is a smell of rubber,
- the vehicle vibrates,
- there is a rattling noise.

When is it no longer possible to continue driving even using anti-puncture tyres?

- If the Electronic Stabilisation Program (ESP) is out of operation.
- If the tyre pressure monitoring system is out of operation.
- If one of the tyres has been severely damaged in an accident, etc. If a tyre has been badly damaged there is a risk that parts of the tread can be thrown off and cause damage to the fuel lines, brake pipes or fuel filler.
- It is also advisable to stop driving if severe vibrations occur, or if the wheel starts overheating and gives off smoke.

⚠ WARNING

When driving in emergency conditions, the driving quality of the vehicle is considerably impaired.

- **The maximum permitted speed of 80 km/h is subject to road and weather conditions. Please observe legal requirements when doing so.**
- **Avoid sharp turns and rapid manoeuvres, and brake earlier than usual.**

4) Depending upon version and country.

WARNING (continued)

- **Avoid driving over obstacles (for example kerbs) or potholes.**
- **If one or more tyres is being driven in emergency conditions, the driving quality of the vehicle is impaired and there is a risk of accident.**

Note

- The anti-puncture tyres do not “deflate” on losing pressure because they are supported on the reinforced sides. Therefore defects in the tyre can not be detected with a visual inspection.
- Snow chains must not be used on front tyres used in emergency conditions. ■

New tyres and wheels

New tyres and wheels have to be run-in.

The tyres and wheel rims are an essential part of the vehicle's design. The tyres and rims approved by SEAT are specially matched to the characteristics of the vehicle and make a major contribution to good road holding and safe handling ⇒ ⚠.

Tyres should be replaced at least in pairs and not individually (i.e. both front tyres or both rear tyres together). A knowledge of tyre designations makes it easier to choose the correct tyres. Radial tyres have the tyre designations marked on the sidewall, for example:

195/65 R15 91T

This contains the following information:

195 Tyre width in mm
65 Height/width ratio in %
R Tyre construction: **R**adial
15 Rim diameter in inches
91 Load rating code
T Speed rating

The tyres could also have the following information:

- A direction of rotation symbol
- “Reinforced” denotes heavy-duty tyres.

The manufacturing date is also indicated on the tyre sidewall (possibly only on the inner side of the wheel).

“DOT ... 1103...” means, for example, that the tyre was produced in the 11th week of 2003.

We recommend that work on tyres and wheels is carried out by an Authorised Service Centre. They are familiar with the procedure and have the necessary special tools and spare parts as well as the proper facilities for disposing of the old tyres.

Any Authorised Service Centre has full information on the technical requirements when installing or changing tyres, wheels or wheel trims.

WARNING

- **We recommend that you use only wheels and tyres which have been approved by SEAT for your model. Failure to do so could impair vehicle handling. Risk of accident.**
- **Avoid running the vehicle on tyres that are more than six years old. If you have no alternative, you should drive slowly and with extra care at all times.**
- **Never use old tyres or those with an unknown “history of use”.**
- **If wheel trims are retrofitted, you must ensure that the flow of air to the brakes is not restricted. This could cause them to overheat.**
- **All four wheels must be fitted with radial tyres of the same type, size (rolling circumference) and the same tread pattern.**

For the sake of the environment

Old tyres must be disposed of according to the laws in the country concerned.

Note

- For technical reasons, it is not generally possible to use the wheels from other vehicles. This can also apply to wheels of the same model. The use of wheels or tyres which have not been approved by SEAT for use with your model may invalidate the vehicle's type approval for use on public roads.
- If the spare tyre is not the same as the tyres that are mounted on the vehicle - for example with winter tyres - you should only use the spare tyre for a short period of time and drive with extra care. Refit the normal road wheel as soon as possible. ■

Wheel bolts

Wheel bolts must be tightened to the correct torque.

The design of wheel bolts is matched to the rims. If different wheel rims are fitted, the correct wheel bolts with the right length and correctly shaped bolt heads must be used. This ensures that wheels are fitted securely and that the brake system functions correctly.

In certain circumstances, you may not use wheel bolts from a different car - even if it is the same model ⇒ page 214.

After the wheels have been changed, the tightening torque of the wheel bolts should be checked as soon as possible with a torque wrench. ⇒ ⚠ The tightening torque for steel and alloy wheels is 120 Nm.

WARNING

If the wheel bolts are not tightened correctly, the wheel could become loose while driving. Risk of accident.

- **The wheel bolts must be clean and turn easily. Never apply grease or oil to them.**
- **Use only wheel bolts which belong to the wheel.**
- **If the torque of the wheel bolts is too low, they could loosen whilst the vehicle is in motion. Risk of accident! If the tightening torque is too high, the wheel bolts and threads can be damaged.**

Caution

The prescribed torque for wheel bolts for steel and alloy wheels is 120 Nm. ■

Winter tyres

Winter tyres will improve the vehicles handling on snow and ice.

In winter conditions winter tyres will considerably improve the vehicles handling. The design of summer tyres (width, rubber compound, tread pattern) gives less grip on ice and snow.

Winter tyres must be inflated to a **pressure** 0.2 bar higher than the pressures specified for summer tyres (see sticker on tank flap).

Winter tyres must be fitted on all four wheels.

Information on permitted **winter tyre sizes** can be found in the vehicle's registration documents. Use only radial winter tyres. All tyre sizes listed in the vehicle documentation also apply to winter tyres. ▶

Winter tyres lose their effectiveness when the tread is worn down to a depth of 4 mm.

The speed rating code ⇒ page 242, “New tyres and wheels” determines the following **speed limits** for winter tyres: ⇒ ⚠

Q max. 160 km/h
S max. 180 km/h
T max. 190 km/h
H max. 210 km/h

In some countries, vehicles which can exceed the speed rating of the fitted tyre must have an appropriate sticker in the driver's field of view. These stickers are available from your Authorised Service Centre. The legal requirements of each country must be followed.

Do not have winter tyres fitted for unnecessarily long periods. Vehicles with summer tyres handle better when the roads are free of snow and ice.

If you have a flat tyre, please refer to the notes on the spare wheel ⇒ page 242, “New tyres and wheels”.

WARNING

The maximum speed for the winter tyres must not be exceeded. Otherwise, this could lead to tyre damage and thus, an accident risk.

For the sake of the environment

Fit your summer tyres in good time. They are quieter, do not wear so quickly and reduce fuel consumption. ■

Snow chains

Snow chains may be fitted only to the front wheels, and only to certain tyre sizes ⇒ page 288.

205/55 R16	15 mm chains
225/45 R17	9 mm chains
225/40 R18	7 mm chains

Remove wheel hub covers and trim rings before fitting snow chains. For safety reasons cover caps, available in any Authorised Service Centre, must then be fitted over the wheel bolts.

WARNING

Observe the fitting instructions provided by the snow chain manufacturer.

Caution

You must remove the snow chains to drive on roads which are free of snow. Otherwise they will impair handling, damage the tyres and wear out very quickly.

Note

- In some countries, the speed limit for using snow chains is 50 km/h. The legal requirements of the country should be followed.
- We recommend that you ask your Approved Service Centre for information about appropriate wheel, tyre and snow chain size. ■

If and when

Tools, tyre repair kit and spare wheel

Tools

The tools and jack are stored under the floor panel in the luggage compartment.

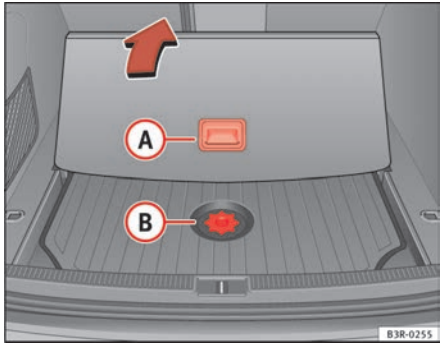

Fig. 185 Access to the toolbox and jack

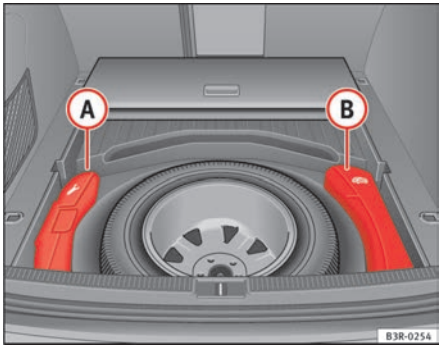

Fig. 186 Toolbox and jack

The tools (A) and jack (B) ⇒ fig. 186 for vehicles with a spare wheel and for vehicles with the tyre repair kit are stored under the floor panel in the luggage compartment.

– Take hold of handle (A) and fold back the floor panel in the luggage compartment ⇒ fig. 185.

– Unscrew the attachment screw from cover (B) ⇒ fig. 185.

– Remove cover.

– Release the toolbox by pulling up on the handle on the box (vehicles equipped with spare wheel).

– Take out the tools or jack. ▶

The tool kit includes:

- A hook for removing wheel covers* or hub caps
- Box spanner for wheel bolts
- A screwdriver with reversible blade
- Towing eye
- An adapter for the anti-theft wheel bolts*

Before replacing the jack in the storage bin, wind down the arm of the jack as far as it will go.

Some of the tools listed are only provided in certain models or are optional extras.

WARNING

- **Do not use the hexagonal socket in the screwdriver handle to tighten the wheel bolts, as with this it is not possible to tighten the bolts to the required torque. Risk of accident.**
- **The jack supplied by the factory is only designed for changing wheels on this model. On no account attempt to use it for lifting heavier vehicles or other loads. Risk of injury.**
- **Never start the engine when the vehicle is raised. Failure to do so could result in an accident.**
- **If work is to be carried out underneath the vehicle, this must be secured by suitable stands. Otherwise, there is a risk of injury.** ■

Tyre mobility system

The tyre mobility system is stored under the floor panel in the luggage compartment.

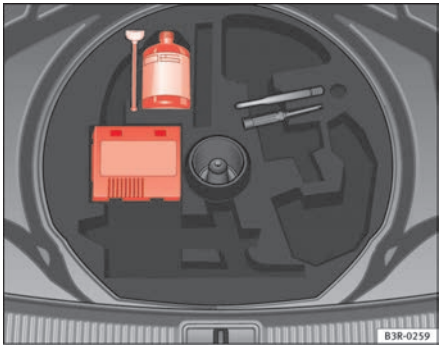

Fig. 187 Tyre Mobility System under floor panel in luggage compartment

– Take hold of the handle and fold back the floor panel in the luggage compartment.

– Take out the tyre mobility system.

Your vehicle is equipped with a Tyre Mobility System in case of a puncture.

The tyre mobility system consists of a container with **sealing compound** and a **compressor** to generate the required tyre pressure.

Instructions for using the sealant compound and the compressor are included with the sealant can. ■

Spare steel rim wheel

The spare steel rim wheel is carried in the wheel well under the floor panel in the luggage compartment. It is only intended for temporary use over short distances.

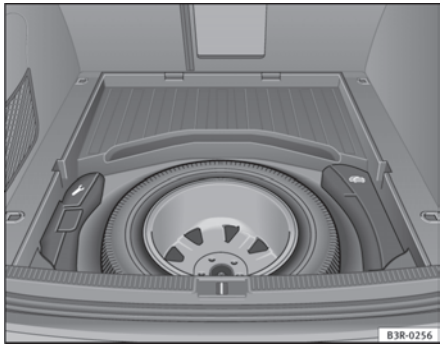

Fig. 188 Spare steel rim wheel

Taking out the spare wheel

– Turn the plastic knob ⇒ fig. 188 anti-clockwise.

– Take out the spare wheel.

Securing the defective wheel in the spare wheel well

– Place wheel in spare wheel well in the luggage compartment.

– Secure wheel by turning plastic knob clockwise.

– Replace the floor panel before closing the boot lid.

Your vehicle can be equipped with a steel spare wheel at the factory. The spare wheel does **not** usually meet the same performance standards as the wheels fitted on the vehicle because of the wheel/tyre dimensions, rubber composition, tread pattern, etc. Therefore, note the following restrictions:

- The spare steel rim wheel is designed only for your vehicle model. Do not attempt to mount the wheel on any vehicle but your own.
- Your vehicle will have different driving characteristics when the spare steel rim wheel is mounted ⇒ ⚠.
- The spare wheel is only intended for temporary use after having a flat tyre. Replace the spare wheel with a normal wheel that has the proper tyre dimensions as soon as possible.
- If the size of the spare steel rim wheel is different to that of the other wheels, it is unlikely that snow chains suitable for the other wheels will fit it.

⚠ WARNING

- **After mounting the spare steel rim wheel, the tyre pressure must be checked and corrected as soon as possible. The inflating pressure must adapt to the vehicle load (consult the table containing the inflation pressures). Otherwise there is danger of causing an accident. Use the highest tyre pressure as indicated in the table.**
- **Do not drive faster than 80 km/h, as higher speeds can cause an accident.**
- **Avoid heavy acceleration, hard braking and fast cornering, as this could cause an accident.** ■

Changing a wheel

Preparation work

What you must do before changing a wheel.

- If you have a flat tyre or puncture, park the car as far away from the flow of traffic as possible. Choose a location that is as **level** as possible.
- All passengers should **leave** the vehicle. They should wait in a safe place (e.g. behind the roadside crash barrier).
- Apply the **handbrake** firmly.
- Engage **1st gear**.
- When towing a trailer: Unhitch the trailer from your vehicle.
- Take the **tools** and the **spare wheel** ⇒ page 245 out of the luggage compartment.

WARNING

If you have a puncture in heavy traffic, switch on the hazard warning lights and place the warning triangle in a visible location. This is for your own safety and also warns other road users.

Caution

If you have to change the tyre on a gradient, block the wheel opposite the wheel being changed by placing a stone or similar object under it to prevent the vehicle from rolling away.

Note

Please observe legal requirements when doing so. ■

Changing a wheel

Change the wheel as described below.

- Remove the **wheel cover**.
- Loosen the **wheel bolts** ⇒ page 249.
- **Raise** the car with the jack ⇒ page 250.
- **Take off** the wheel with the flat tyre and then **put on** the spare wheel ⇒ page 251.
- **Lower** the vehicle.
- Tighten the wheel bolts **firmly** in diagonal sequence with the box spanner ⇒ page 249.
- Replace the **cover**. ■

After changing a wheel

After changing the wheel, there are still tasks to complete.

- Place the wheel with the defective tyre **in the spare wheel well** and secure it.
- Put the tools and jack back in the luggage compartment. ▶

– The **inflation pressure** of the newly fitted spare tyre must be checked as soon as possible.

– Have the **tightening torque** of the wheel bolts checked as soon as possible with a torque wrench. It must be 120 Nm (always when cold)

– Have the flat tyre **replaced** as quickly as possible.

Note

- If you notice that the wheel bolts are rusty and difficult to turn when changing a wheel, they must be replaced before having the tightening torque checked.
- For your safety, drive at moderate speeds until the wheel bolt torque has been checked. ■

Loosening and tightening the wheel bolts

The wheel bolts must be loosened before raising the vehicle.

Fig. 189 Changing the wheel: Loosen the wheel bolts

Loosening

– Fit the **box spanner** as far as it will go over the wheel bolt [5].

– Grip the box spanner as close to the *end* as possible and turn the wheel bolts about *one* turn **anti-clockwise** ⇒ fig. 189 -arrow-.

Tightening

– Fit the box spanner as far as it will go over the wheel bolt[5].

– Grip the box spanner as close to the *end* as possible and tighten the bolt firmly by turning **clockwise**. ▶

[5] An adapter is required to unscrew or tighten the anti-theft wheel bolts* ⇒ page 252.

WARNING

Loosen the wheel bolts only about one turn before raising the vehicle with the jack. Failure to do so could result in an accident.

Note

- Do not use the hexagonal socket in the screwdriver handle to loosen or tighten the wheel bolts.
- If the wheel bolt does not come loose, it may be possible to release it by pushing down the end of the spanner carefully with your *foot*. Hold on to the vehicle for support and take care not to slip. ■

Raising the vehicle

In order to remove the wheel, the vehicle must be raised with a jack.

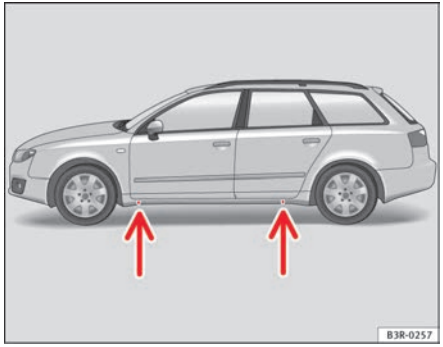

Fig. 190 Changing the wheel: The jacking points

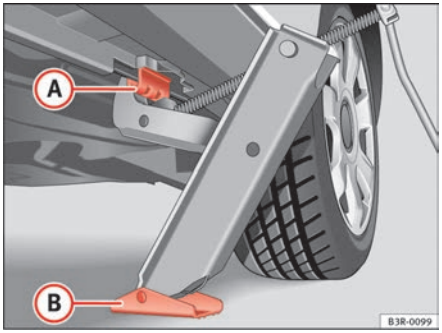

Fig. 191 Changing the wheel: Jack

– Position the vehicle jack under the door sill at the **jacking point** closest to the wheel being changed ⇒ fig. 190 -arrows-.

– Wind up the **jack** under the jacking point until the claw of the jack is directly below the vertical rib under the door sill.

– Align the jack so that the arm of the jack fits on the rib under the door sill ⇒ fig. 191 (A) and the movable base plate of the jack (B) is flat on the ground.

– Raise the vehicle until the defective wheel is just clear of the ground.

Recesses at the front and rear of the door sills mark the jacking points ⇒ fig. 190 -arrows-. There is only *one* jacking point for each wheel. Do not fit the jack anywhere else.

The distance from the jacking points to the wheel arches is approximately 15 cm at the front and 25 cm at the rear. ▶

An **unstable surface** under the jack may cause the vehicle to slip off the jack. Therefore, the jack must be fitted on solid ground offering good support. Use a large, stable base if necessary. On a **hard, slippery surface** (such as tiles) use a rubber mat or similar to prevent the jack from slipping.

WARNING

- **Take all precautions so that the base of the jack does not slip. Failure to do so could result in an accident.**
- **The vehicle can be damaged if the jack is not applied at the correct jacking points. There is also a risk of injury since the jack can slip off suddenly if it is not properly engaged.** ■

Removing and fitting the wheel

For removal and fitting the wheel, the following tasks must be completed.

Fig. 192 Changing the wheel: Hexagonal socket in screwdriver handle to turn the wheel bolts

After loosening the wheel bolts and raising the vehicle with the jack, cange the wheel as described below:

Removing a wheel

– Unscrew the bolts using the **hexagonal tool** in the handle of the screwdriver (vehicle tool) and place them on a clean surface ⇒ fig. 192.

Fitting a wheel

– Screw in the wheel bolts and tighten them lightly using the hexagonal socket in the screwdriver handle.

The wheel bolts should be clean and easily screwed. Before fitting the spare wheel, inspect the wheel condition and hub mounting surfaces. These surfaces must be clean before fitting the wheel.

The hexagonal socket in the screwdriver handle makes it easier to turn the wheel bolts. The reversible screwdriver blade should be removed when the tool is used for this purpose.

If tyres with a specific direction of rotation are fitted, note the direction of rotation.

Note

Do not use the hexagonal socket in the screwdriver handle to loosen or tighten the wheel bolts. ■

Anti-theft wheel bolts

A special adapter is required to turn the anti-theft wheel bolts.

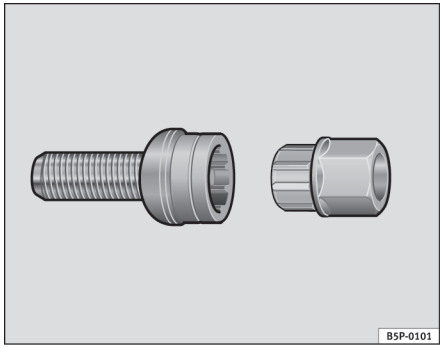

Fig. 193 Anti-theft wheel bolt

– Insert the adapter onto the wheel bolt and push it on as far as it will go ⇒ fig. 193.

– Fit the box spanner as far as it will go over the adapter.

– Loosen or tighten the wheel bolt as appropriate.

Error code

The code number of the anti-theft wheel bolt is stamped onto the front part of the adaptor.

The code number should be noted and kept in a safe place, as it is only by using the code number that a duplicate adaptor can be obtained from an Authorised Service Centre. ■

Tyres with directional tread pattern

Tyres with directional tread pattern must be fitted so that they rotate in the correct direction.

A directional tread pattern can be identified by arrows on the sidewall that point in the direction of rotation. Always note the direction of rotation indicated when fitting the wheel. This is important so that these tyres can give maximum grip and avoid excessive noise, tread wear and aquaplaning.

If, in an emergency, you have to fit the spare wheel so it rotates in the wrong direction, you must drive extremely carefully. The tyre will not give optimum performance. This is particularly important when driving on wet roads.

To benefit from the advantages of tyres with this type of tread pattern, the defective tyre should be replaced as soon as possible so that all tyres again rotate in the correct direction. ■

Tyre repair* (Tyre-Mobility-System)

General information and safety notes

Repaired tyres are only suitable for temporary use over a short period.

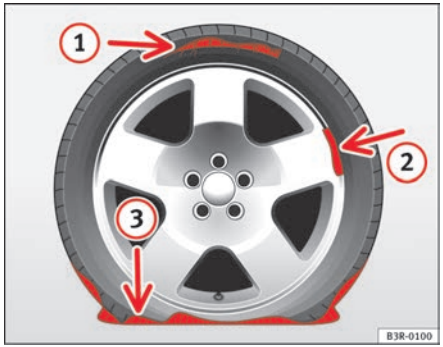

Fig. 194 The Tyre Mobility System is not suitable for repairing this type of damage to tyres.

Your vehicle is equipped with a tyre repair kit: the **Tyre Mobility System**.

In the event of a puncture you will find the **TMS**, which consists of a sealing compound and a compressor, located under the floor panel in the luggage compartment.

The **Tyre Mobility System** will reliably seal tyres damaged by foreign bodies, provided that the cuts or punctures are no larger than approx. **4 mm** in diameter.

It is not necessary to remove the foreign body from the tyre.

The sealing compound must not be used in the following cases:

- On cuts and punctures larger than 4 mm ⇒ fig. 194 (1)
- if the wheel rim has been damaged (2)
- if you have been driving with very low pressure or a completely flat tyre (3)

How to use the **TMS (tyre mobility system)** is described in the section **Repairing a tyre** ⇒ page 254 and in the instructions supplied with the tyre sealant can.

The **TMS (tyre mobility system)** can be used at outside temperatures down to -20°C.

WARNING

After repairing a tyre please note the following points:

- **Do not drive faster than 80 km/h.**
- **Avoid heavy acceleration, hard braking and fast cornering.**
- **Vehicle handling could be impaired.**
- **Tyres which have been sealed using the Tyre Mobility System are only suitable for temporary use over a short period.**
- **After using the tyre sealant the tyre pressure monitoring system* may malfunction. Therefore, please drive carefully to the next available qualified workshop.**
- **The Tyre Mobility System must NOT be used,**
  - **on cuts and punctures larger than 4 mm**
  - **if the wheel rim has been damaged**
  - **if you have been driving with very low pressure or a completely flat tyre**
- **Seek professional assistance if the repair of a tyre puncture is not possible with the sealing compound.**
- **Do not allow the sealant to come into contact with your eyes, skin or clothing.**

WARNING (continued)

- **If you do come into contact with the sealant immediately rinse the eyes or skin affected with clean water.**
- **Change clothing immediately if it becomes soiled with the tyre sealant.**
- **Make sure you do not breathe in the fumes!**
- **If any of the tyre sealant is accidentally ingested, immediately rinse the mouth thoroughly and drink lots of water.**
  - **Do not induce vomiting. Seek medical assistance if needed.**
- **If any allergic reactions should occur get medical help immediately.**
- **Keep the sealant away from children.**

For the sake of the environment

Used bottles of sealing compound can be returned to the Technical Service for disposal.

Note

- If sealant should leak out, leave it to dry. When it has dried, you can pull it off like a piece of foil.
- Observe the expiry date stated on the sealing compound can. Have the sealing compound exchanged by a qualified workshop. ■

Repairing a tyre

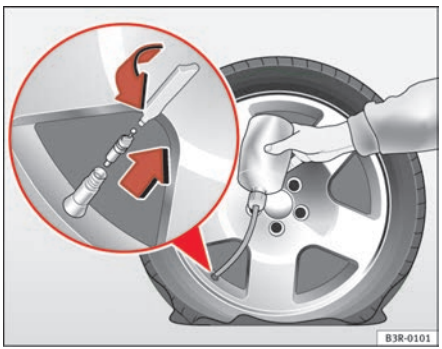

Fig. 195 Repairing a tyre

Preparations

- If you have a flat tyre or puncture, park the car as far away from the flow of traffic as possible.
- Apply the **handbrake** firmly to prevent the vehicle from moving accidentally on slopes.
- Engage **1st gear**.
- Check whether a repair is possible using the Tyre Mobility System ⇒ page 253.
- Ensure that all passengers **leave the vehicle** and move away from the danger area ⇒ ⚠.
- Take the **tyre sealant can** and the **compressor** out of the luggage compartment. ▶

– Stick the “max. 80 km/h” adhesive, which is included with the tyre sealant can, onto the instrument panel where the driver will see it.

Filling the tyre

– Shake the tyre sealant can well.

– Screw the enclosed filling hose onto the sealant can as far as it will go. This will automatically pierce the foil sealing the can.

– Take the valve cap off the tyre valve and use the enclosed valve insert tool to unscrew the valve insert ⇒ page 254, fig. 195.

– Place the valve insert onto a clean surface.

– Remove the sealing plug from the filling hose and insert the hose into the tyre valve.

– Hold the tyre sealant can upside down and fill the complete contents of the can into the tyre.

– Then disconnect the hose and screw the valve insert firmly back into the tyre valve.

Inflating the tyre

– Screw the compressor filling hose onto the tyre valve and plug the connector into the cigarette lighter.

– Pump the tyre up to 2.0 to 2.5 bar and monitor the pressure shown on the pressure gauge.

– If the tyre pressure remains lower than the value specified above drive the vehicle approx. 10 metres forwards or backwards, so that the sealant can spread evenly in the tyre. If the pressure is still lower than the specification the tyre is too badly damaged and cannot be repaired using the tyre sealant.

Final check

– After about 10 minutes, stop to check the tyre pressure.

– If tyre pressure is less than 1.3 bar, the tyre is too badly damaged. Do not drive on! You should obtain professional assistance.

WARNING

- **If you have a puncture in heavy traffic, switch on the hazard warning lights and place the warning triangle in a visible location. This is for your own safety and also warns other road users.**
- **Make sure your passengers wait in a safe place (for instance behind the roadside crash barrier).**
- **Please observe the manufacturers' safety notes on the compressor and the instructions supplied with the tyre sealant can.**
- **If it was not possible to build up a tyre pressure of 2.0 bar within 6 minutes this means that the tyre is too badly damaged. Do not drive on!**
- **Seek professional assistance if the repair of a tyre puncture is not possible with the sealing compound.**
- **If tyre pressure is less than 1.3 bar after driving about 10 minutes, the tyre is too badly damaged. Do not drive on! Obtain technical assistance.**

Caution

Take special care if you have to repair a tyre on a slope.

Note

- Do not use the compressor for longer than 6 minutes. Otherwise, it might overheat. When the compressor has cooled down, you can use it again.
- If tyre sealant should leak out, leave it to dry and then pull it off like foil.
- After carrying out a tyre repair remember to buy a new tyre sealant can at a qualified workshop. This will ensure that the Tyre Mobility System is operative again.
- Please observe legal requirements when doing so. ■

Fuses

Changing fuses

If a fuse has blown, it must be replaced.

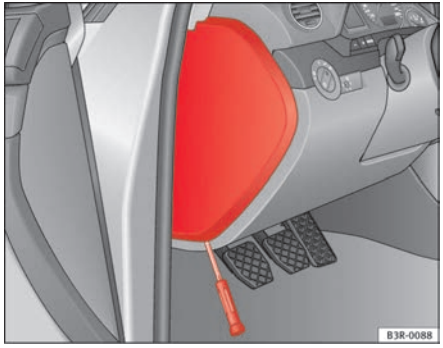

Fig. 196 Left side of dash panel: Fuse box cover

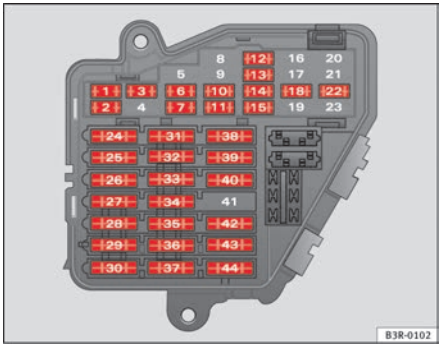

Fig. 197 Schematic drawing of fuse box at the left-hand end of instrument panel: Fuses (without fuse cover)

– Switch off the ignition and its failed electrical component.

– Remove the fuse cover using a screwdriver ⇒ fig. 196.

– Identify the fuse for the failed component ⇒ page 257, “Fuse assignment”.

– Take the plastic clip from inside the fuse cover, fit it onto the blown fuse, and pull the fuse out.

– Replace the blown fuse (which will have a melted metal strip) with a new fuse of the *same* amp rating.

– Fit the fuse cover back on.

The individual electrical circuits are protected by fuses. The fuses are located behind a cover at the left-hand end of the instrument panel.

Two spare fuses and a sticker identifying the fuses are provided on the inside of the fuse cover. There is also a crank handle for operating the sun roof* by hand (if the electrical system fails). ▶

Caution

Never “repair” damaged fuses and never replace them with fuses with a higher rating. Failure to comply could result in fire. It could also cause damage to other parts of the electrical system.

Note

If a newly replaced fuse blows again after a short time, the electrical system must be checked by a qualified workshop as soon as possible. ■

Fuse assignment

This list shows the fuses which can be replaced relatively easily by the owner.

No.	Consumer	Amps
1	Climate control	10
2	Footwell lamps	5
3	Heated washer jets	5
4	Radiator fan	5
5	Parking aid	10
6	Air conditioner (air purity sensor), pressure sensor	5
7	Electronic Stabilisation Program (ESP), brake light switch, clutch pedal switch, steering angle sensor	10
8	Telephone	5
9	Vacant	
10	Self-directing headlights (adaptive light) right	5
11	Airbag and disconnection of the front passenger air-bag	5
12	Diagnostic socket	10
13	Steering column unit	10
14	Brake lights	10
15	Instrument panel	10
16	Vacant	
17	Tyre pressure control, rain/light sensor	10
18	Self-directing headlights (adaptive light) left	5
19	Vacant	
20	Vacant	
21	Vacant	
22	Driver's door / front passenger's door	15
23	Rear doors	15
24	Central electrics unit for convenience equipment	20
25	Heater blower	30
26	Rear window heater	30
27	Electrical socket for trailer (control unit)	30
28	Fuel pump, auxiliary pump for diesel	20
29	Vacant	
30	Sliding/tilting sunroof	20
31	Diagnosis connection, automatic anti-dazzle interior mirror, reverse light	15
32	Towing socket	15

No.	Consumer	Amps
33	Lighter	20
34	Diesel lambda-probe	5
35	Luggage compartment power point*	20
36	Wiper system	30
37	Pump for windscreen washer and headlight washer system	30
38	Luggage compartment illumination, alarm	15
39	Radio	20
40	Horn	25
41	Vacant	30
42	Electronic stabilisation programme (ESP)	25
43	Engine management	15
44	Seat heating	35

Some of the electrical items listed in the table are only fitted on certain models or are optional extras.

The electric windows and electric seat adjusters are protected by **circuit breakers**. These reset automatically after a few seconds when the overload (caused for example by frozen windows) has been corrected.

Note

Please note that the above list contains all data at the time of going to press, so it is subject to modifications. If discrepancies should occur, please refer to the sticker on the inside of the fuse cover for the correct information for your model. ■

Bulbs

General notes

You can change the following bulbs for exterior lights **yourself**:

- Main headlights: all (except for xenon headlights)
- Rear lights: All bulbs
- Side indicator bulb

The following bulbs can only be changed by a **qualified workshop**:

- Main headlights: Xenon* bulb ⇒ page 265
- Front fog lights: Bulb

As a rule, you require a certain degree of practical skill to change defective bulbs. This applies in particular to those bulbs which are only accessible from the engine compartment.

If in doubt, we recommend that you have defective bulbs changed by a qualified workshop or qualified mechanic.

If you do decide to change bulbs in the engine compartment yourself, be aware of the safety risks involved ⇒ page 221 ⇒ ⚠ in “Types of bulbs”. ■

Changing bulbs Halogen headlights

Types of bulbs

You must only replace a bulb with a bulb of the same type. The name can be found on the base of the bulb. ▶

Bulb	Type
Dipped-beam headlights (halogen)	12 V/55 W (H7 LL)
Main beam headlights	12 V/55 W (H1)
Indicator light	12 V/21 W (PY21W)
Side lights	12 V/5 W (W5W LL)

WARNING

- **Take particular care when working on components in the engine compartment if the engine is warm - risk of burns!**
- **Bulbs are highly sensitive to pressure. The glass can break when you touch the bulb, causing injury.**
- **The high voltage element of gas discharge lamps* (xenon light) must be handled correctly. Otherwise, there is a risk of death.**
- **When changing bulbs, please take care not to injure yourself on sharp parts in the headlight housing.**

Caution

- Remove the ignition key before working on the electric system. If not, a short circuit could occur.
- Switch off the lights or parking lights before you change a bulb.

For the sake of the environment

Please ask your specialist retailer how to dispose of used bulbs in the proper manner.

Note

- Depending on weather conditions (cold or wet), the front lights, the fog lights, the rear lights and the indicators may be temporarily misted. This has no influence on the life expectancy of the lighting system. By switching on the lights, the area through which the beam of light is projected will quickly be demisted. However, the edges may continue to be misted.
- Please check at regular intervals that all lighting (especially the exterior lighting) on your vehicle is functioning properly. This is not only in the interest of your own safety, but also in that of all other road users.
- Before changing a bulb, make sure you have the correct new bulb.
- Do not touch the glass part of the bulb with your bare hands, use a cloth or paper towel instead. Otherwise, the fingerprints left on the glass will vaporise as a result of the heat generated by the bulb, be deposited on the reflector and impair its surface. ■

Removing the air duct

The air duct has to be removed to gain access to the bulbs for the right-side headlight.

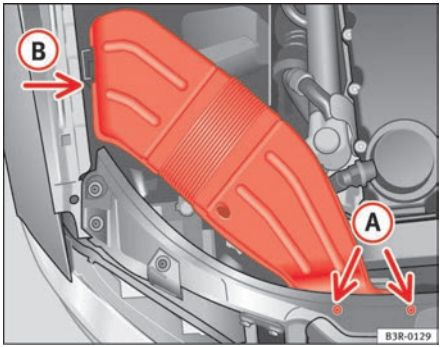

Fig. 198 Air duct on right side of vehicle

– Unscrew bolts (A) ⇒ page 259, fig. 198.

– Detach air duct from guide (B) and take it out. ■

Fitting the air duct

Once the bulb(s) for the right-side headlight have been changed, the air duct must be re-installed.

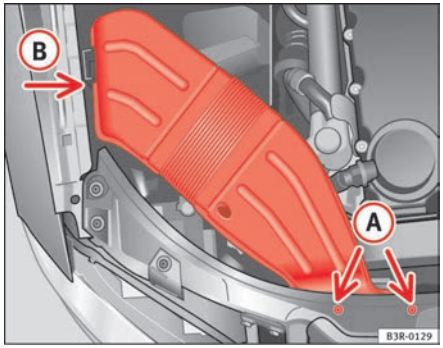

Fig. 199 Air duct on right side of vehicle

– Place the air duct in the correct position.

– First turn the two screws (A) in lightly, then tighten both screws.

– Push air duct into guide (B). ■

Halogen headlight bulbs

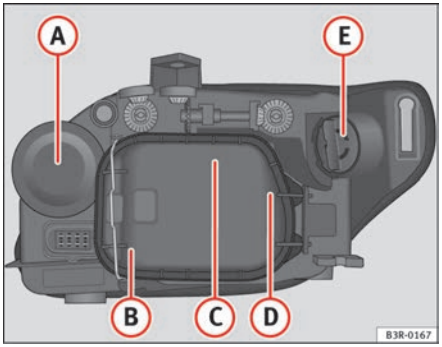

Fig. 200 Halogen bulbs

(A) Main beam headlights
(B) Side lights
(C) Dipped headlights
(D) Side lights
(E) Turn signal light ■

Changing the turn signal bulb

The procedure for changing the bulbs on the front passenger's side is the same as on the driver's side.

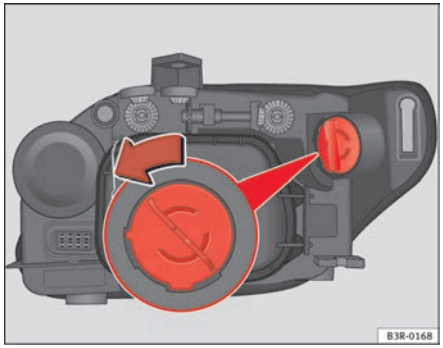

Fig. 201 Turn signal bulb

- Switch off the ignition and the lights.
- Raise the bonnet.
- Turn the bulb holder anti-clockwise, pulling it by the grip ⇒ fig. 201 and removing the bulb holder and the bulb.
- Replace the blown bulb in the bulb holder (press and turn anti-clockwise to remove) with a new bulb (press and turn clockwise to insert).
- Installation is in the reverse order.
- Check whether the new bulb is working.

Note

Although it is not necessary, previously remove the rigid cover ⇒ page 263, fig. 204 for easier turn signal bulb changes. ■

Changing the main headlight bulb

The procedure for changing the bulbs on the front passenger's side is the same as on the driver's side.

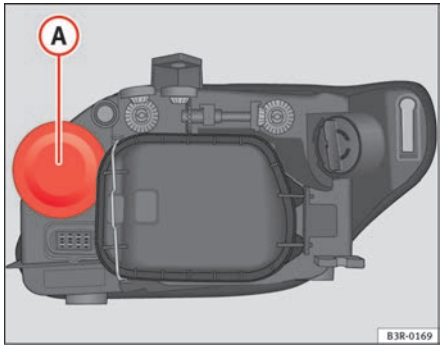

Fig. 202 Main beam headlights

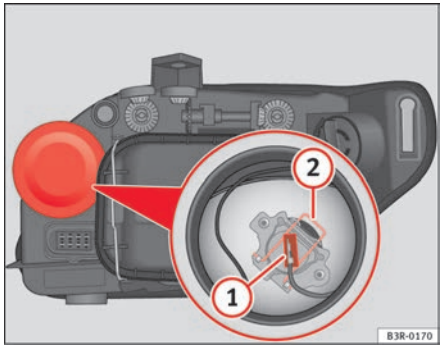

Fig. 203 Main beam headlights

- Switch off the ignition and the lights.
- Raise the bonnet.
- Pull up on the rubber cover (A) ⇒ fig. 202 to remove it.
- Remove the connector ⇒ fig. 203 (1) from the bulb.
- Press the spring ⇒ fig. 203 (2) inwards and to the right.
- Remove the bulb. pulling it from the connection terminal and fitting fit the replacement so that it sits correctly in the cut-out on the reflector. To ensure correct lighting, the filament must be vertical. When changing the bulb, you can check the position of the bulb through the headlight glass.
- Installation is in reverse order, ensuring that the rubber cover is well fitted to the housing.
- Check whether the new bulb is working.
- Have the headlight settings checked as soon as possible. ■

Changing the dipped beam headlight bulb

The procedure for changing the bulbs on the front passenger's side is the same as on the driver's side.

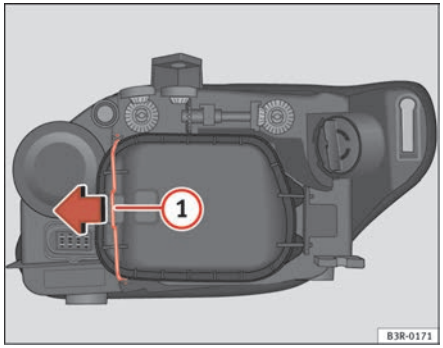

Fig. 204 Dipped headlights

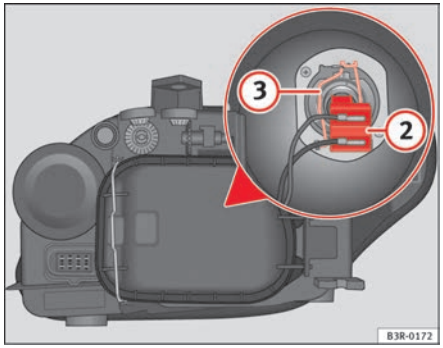

Fig. 205 Dipped headlights

- Switch off the ignition and the lights.
- Raise the bonnet.
- Move the brace ⇒ fig. 204 (1) in the direction of the arrow and remove the rigid cover, separating the brace side and then removing the two tabs from the other end of the cover.
- Pull the connector ⇒ fig. 205 (2) from the bulb.
- Unclip the retainer spring ⇒ fig. 205 (3) pressing inwards to the right.
- Remove the bulb and fit the new one in the headlight casing with the tab upwards, starting to position it from below.
- Clip on the spring, raising it and pressing it slightly while turning it anti-clockwise. To ensure correct lighting, the filament must be vertical. When changing the bulb, you can check the position of the bulb through the headlight glass.
- Connect the connector to the bulb.
- Fit the cover, first inserting the side tabs and then closing the cover and the brace. Make sure that the gasket sits well on the casing cover during the operation.
- Check whether the new bulb is working.
- Have the headlight settings checked as soon as possible. ■

Changing side light bulb (outside of vehicle)

The procedure for changing the bulbs on the front passenger's side is the same as on the driver's side.

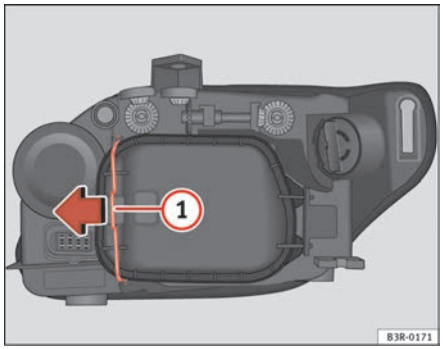

Fig. 206 Side light bulb (outside of vehicle)

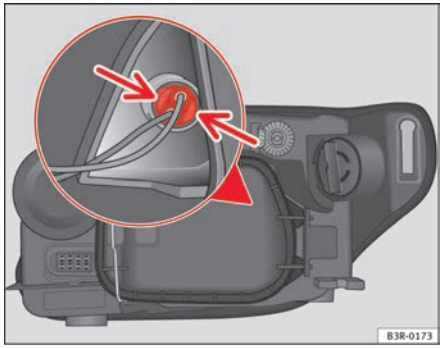

Fig. 207 Side light bulb (outside of vehicle)

– Switch off the ignition and the lights.

– Raise the bonnet.

– Move the brace ⇒ fig. 206 (1) in the direction of the arrow and remove the rigid cover, separating the brace side and then removing the two tabs from the other end of the cover.

– Gently press on the bulb holder tabs ⇒ fig. 207 and pull the cover upwards (it can also be removed by pulling on the bulb holder wires).

– Separate the bulb from the bulb holder by pulling both pieces anti-clockwise.

– Fit the new bulb by pressing on the bulb holder.

– Insert the bulb into the socket and press on the bulb holder. Fit the cover, first inserting the side tabs and then closing the cover and the brace. Make sure that the gasket sits well on the casing cover during the operation.

– Check whether the new bulb is working. ■

Changing the side light bulb (inside of vehicle)

The procedure for changing the bulbs on the front passenger's side is the same as on the driver's side.

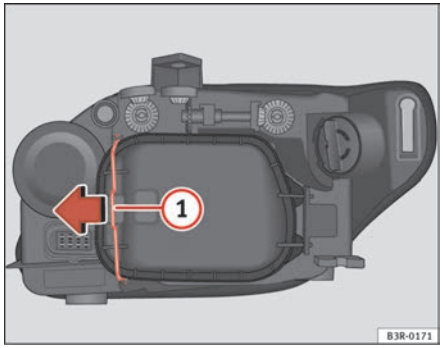

Fig. 208 Side light bulb (inside of vehicle)

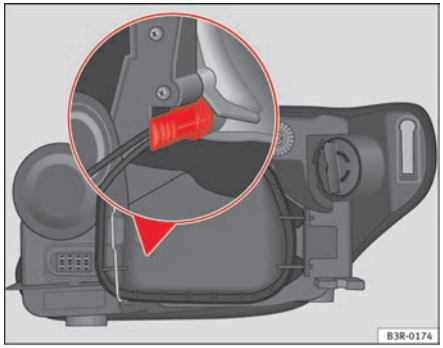

Fig. 209 Side lights. Bulb holder grip in vertical position

- Switch off the ignition and the lights.
- Raise the bonnet.
- Move the brace ⇒ fig. 208 (1) in the direction of the arrow and remove the rigid cover, separating the brace side and then removing the two tabs from the other end of the cover.
- Remove the bulb and the bulb holder by pulling on the bulb holder wiring.
- Separate the bulb from the bulb holder by pulling both pieces anti-clockwise.
- Fit the new bulb by pressing on the bulb holder.
- Insert the bulb into the socket so that the side of the bulb holder grip is vertical ⇒ fig. 209 and press on it.
- Fit the cover, first inserting the side tabs and then closing the cover and the brace. Make sure that the gasket sits well on the casing cover during the operation.
- Check whether the new bulb is working. ■

Changing bulbs. Bi-Xenon AFS headlights

Types of bulbs

You must only replace a bulb with a bulb of the same type. The name can be found on the base of the bulb. ▶

Bulb	Type
Xenon bulbs	12 V/35 W (D1S)
DRL (day light)	12 V/21 W (P21W SLL)
Indicator light	12 V/21 W (PY21W)
Side lights	12 V/5 W (W5W blue LL)

WARNING

- **Take particular care when working on components in the engine compartment if the engine is warm - risk of burns!**
- **Bulbs are highly sensitive to pressure. The glass can break when you touch the bulb, causing injury.**
- **The high voltage element of gas discharge lamps* (xenon light) must be handled correctly. Otherwise, there is a risk of death.**
- **When changing bulbs, please take care not to injure yourself on sharp parts in the headlight housing.**

Caution

- Remove the ignition key before working on the electric system. If not, a short circuit could occur.
- Switch off the lights or parking lights before you change a bulb.

For the sake of the environment

Please ask your specialist retailer how to dispose of used bulbs in the proper manner.

Note

- Depending on weather conditions (cold or wet), the front lights, the fog lights, the rear lights and the indicators may be temporarily misted. This has no influence on the useful life of the lighting system. By switching on the lights, the area through which the beam of light is projected will quickly be demisted. However, the edges may continue to be misted.
- Please check at regular intervals that all lighting (especially the exterior lighting) on your vehicle is functioning properly. This is not only in the interest of your own safety, but also in that of all other road users.
- Before changing a bulb, make sure you have the correct new bulb.
- Do not touch the glass part of the bulb with your bare hands, use a cloth or paper towel instead. Otherwise, the fingerprints left on the glass will vaporise as a result of the heat generated by the bulb, be deposited on the reflector and impair its surface. ■

Removing the air duct

The air duct has to be removed to gain access to the bulbs for the right-side headlight.

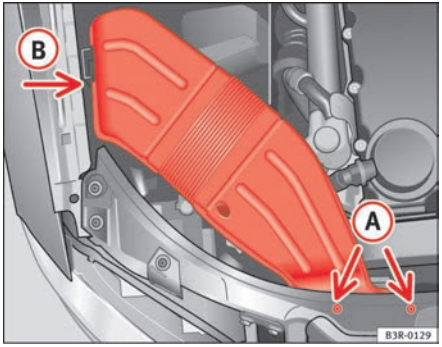

Fig. 210 Air duct on right side of vehicle

– Unscrew bolts (A) ⇒ page 266, fig. 210.

– Detach air duct from guide (B) and take it out. ■

Fitting the air duct

Once the bulb(s) for the right-side headlight have been changed, the air duct must be re-installed.

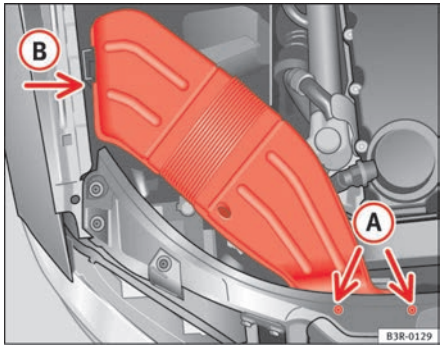

Fig. 211 Air duct on right side of vehicle

– Place the air duct in the correct position.

– First turn the two screws (A) in lightly, then tighten both screws.

– Push air duct into guide (B). ■

Bi-Xenon AFS headlight bulbs

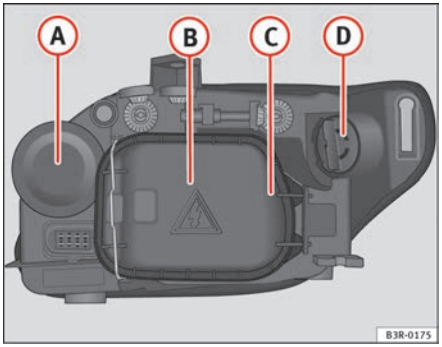

Fig. 212 Bi-Xenon AFS headlight bulbs

(A) Indicator light
(B) Xenon headlight (dipped-beam/main beam)
(C) Side lights
(D) DRL light (day light) ■

Changing the DRL light bulb (day light)

The procedure for changing the bulbs on the front passenger's side is the same as on the driver's side.

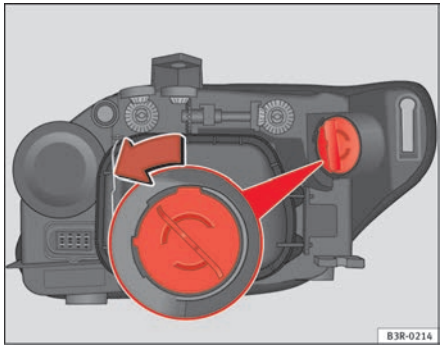

Fig. 213 DRL light (day light)

- Switch off the ignition and the lights.
- Raise the bonnet.
- Turn the bulb holder anti-clockwise, pulling it by the grip ⇒ fig. 213 and removing the bulb holder and the bulb.
- Replace the blown bulb in the bulb holder (press and turn anti-clockwise to remove) with a new bulb (press and turn clockwise to insert).
- Installation is in the reverse order.

Note

Although it is not necessary, previously remove the rigid cover ⇒ page 270, fig. 216 for easier day light bulb changes. ■

Changing the turn signal bulb

The procedure for changing the bulbs on the front passenger's side is the same as on the driver's side.

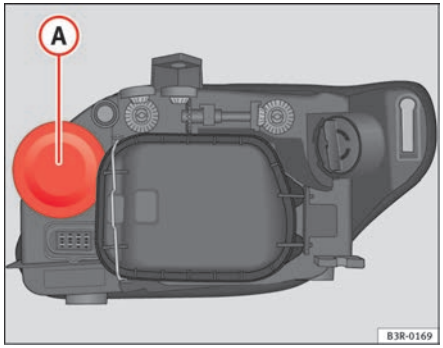

Fig. 214 Turn signal

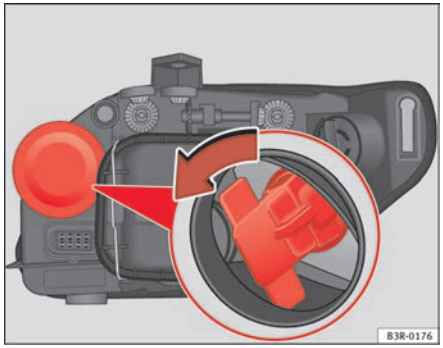

Fig. 215 Turn signal

- Switch off the ignition and the lights.
- Raise the bonnet.
- Pull the rubber cap ⇒ fig. 214 to remove it.
- Remove the bulb holder by pulling on the grip and turning it anti-clockwise ⇒ fig. 215.
- Replace the blown bulb in the bulb holder (press and turn anti-clockwise to remove) with a new bulb (press and turn clockwise to insert).
- Insert the bulb holder into the socket with the tab facing upwards and the grip horizontal. Press it against the socket and turn clockwise. When changing the bulb, you can check the position of the bulb through the headlight glass.
- Fit the rubber cap and tighten, making sure it fit properly into the headlight casing.
- Check whether the new bulb is working. ■

Changing the side light bulb

The procedure for changing the bulbs on the front passenger's side is the same as on the driver's side.

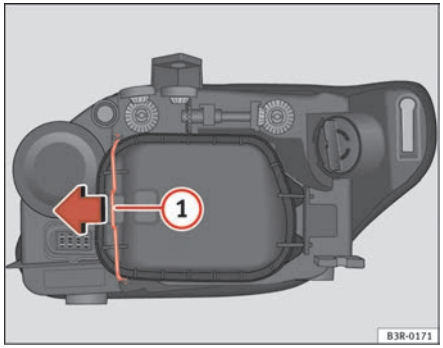

Fig. 216 Side light

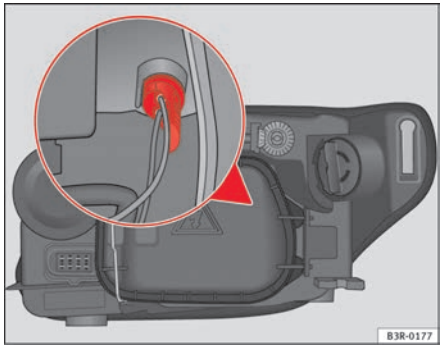

Fig. 217 Side light

- Switch off the ignition and the lights.
- Raise the bonnet.
- Move the brace ⇒ fig. 216 (1) in the direction of the arrow and remove the rigid cover, separating the brace side and then removing the two tabs from the other end of the cover.
- Remove the bulb holder by pulling on the grip ⇒ fig. 217 (it can also be removed by pulling on the bulb holder wires).
- Separate the bulb from the bulb holder by pulling both pieces anti-clockwise.
- Fit the new bulb by pressing on the bulb holder.
- Insert the bulb into the socket and press on the bulb holder grip.
- Fit the cover, first inserting the side tabs and then closing the cover and the brace. Make sure that the gasket sits well on the casing cover during the operation.
- Check whether the new bulb is working. ■

Changing the xenon bulb

The procedure for changing the bulbs on the front passenger's side is the same as on the driver's side.

WARNING

This type of bulb should be changed at a qualified workshop. ■

Changing bulbs for rear lights (in side panel)

Overview of rear lights

Fig. 218 Overview of rear lights

Rear lights in side panel

- Brake lights and rear lights
- Indicator light ■

Removing rear light

To change the bulbs you must remove the rear light assembly. Removing the light requires a certain degree of practical skill.

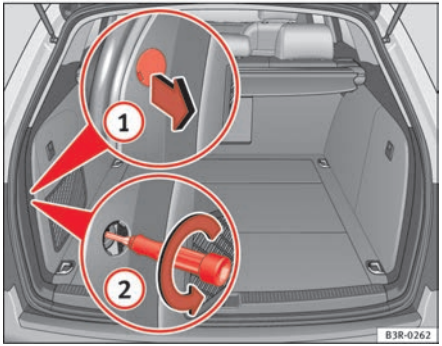

Fig. 219 Luggage compartment: Location of the bolt securing the rear light

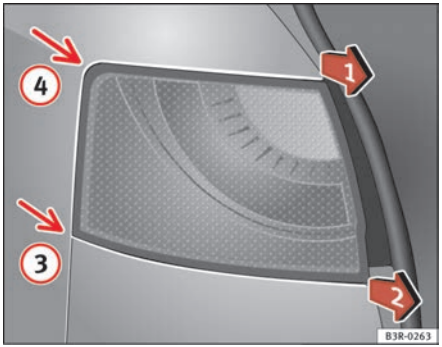

Fig. 220 Removing rear light from side panel ▶

A special retaining screw is used to secure and guide the rear light.

– Check which of the bulbs is defective.

– Open the tailgate.

– Take the screwdriver out of the vehicle's tool kit ⇒ page 245.

– Use the flat-blade side of the reversible screwdriver insert.

– Prise off the cover with a screwdriver in the slot ⇒ page 271, fig. 219 (1) and remove the cover (with the retaining clips) from the opening.

– Carefully loosen the screw located behind the cover with the screwdriver, turning it anti-clockwise (arrows) (2).

– Gradually ease the rear light out of the housing (⇒ page 271, fig. 220 positions (3) and (4)) by pulling alternately in positions (1) and (2).

– Remove the bulb holder ⇒ page 272.

Caution

When removing or installing the rear light, take care not to cause any damage.

- Removing the rear light in particular can lead to the paintwork or rear light becoming damaged. This is another reason why we recommend having the bulbs changed by a qualified workshop.

Note

Make sure you have a soft cloth ready to place under the glass on the rear light, to avoid any scratches. ■

Removing the bulb holder

When changing a bulb, you must first remove the bulb holder.

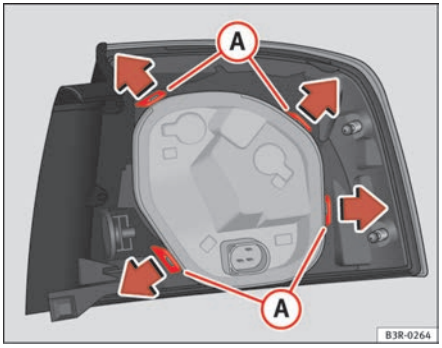

Fig. 221 Retaining tabs on reverse side of rear light

There are four securing tabs on the inside of the rear light unit.

– Release the retaining tabs (A) ⇒ fig. 221.

– Lift the bulb carrier off in direction of the arrow (B).

– Change the defective bulb ⇒ page 273. ■

Changing the bulbs

All bulbs can be changed easily in the bulb holder.

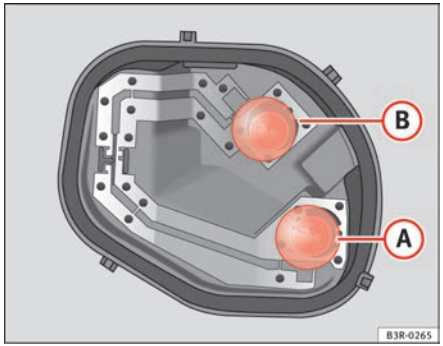

Fig. 222 Position of the bulbs in the bulb holder: Example: Outer left rear light

The bulbs are secured with a bayonet fastener. The table below gives an overview of the bulb positions.

– Lightly press the defective bulb into the bulb holder, then turn it to the left and remove it.

– Fit the new bulb, pressing it into the bulb holder and turn it to the right as far as it will go.

– Use a cloth to remove any fingerprints from the glass part of the bulb.

– Check whether the new bulb is working.

– Re-install the bulb holder ⇒ page 273.

Position of the bulbs

Pos. ⇒ fig. 222	Bulb function
A	Indicator light
B	Side/stop lights

Fitting the bulb holder

The bulb holder is easy to fit.

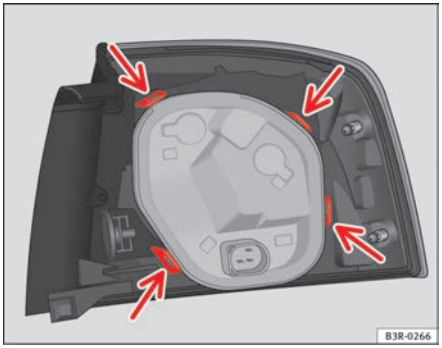

Fig. 223 Securing the bulb holder in the rear light unit

– Check that the seal is seated correctly on the bulb holder.

– Position the bulb holder on the rear light and align it so that it is securely seated.

– Press the bulb holder into the rear light until it engages.

– Check that all four retaining tabs ⇒ page 273, fig. 223 -arrows- have engaged.

– Re-install the rear light unit ⇒ page 274. ■

Fitting the rear light unit

The rear light unit is easy to fit.

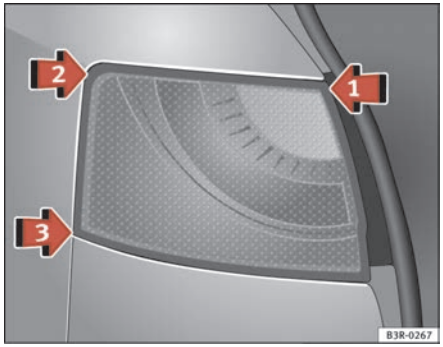

Fig. 224 Fitting the rear light unit

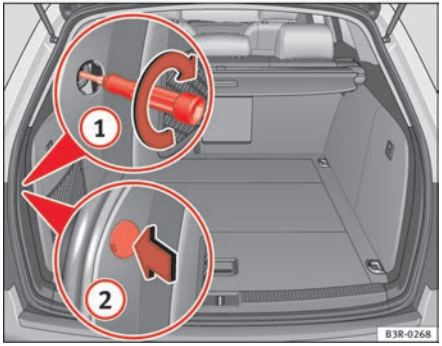

Fig. 225 Luggage compartment: Location of the bolt securing the rear light unit

– First place the rear light unit in ⇒ fig. 224 arrow (1) in the housing.

– Gently press the rear light unit against the housing, first in position (2) and then in position (3), until that the clips engage firmly in the rubber mountings.

– Apply gentle pressure to the front side of the rear light unit and secure using the screwdriver, from the luggage compartment ⇒ fig. 225 (1).

– Try to move the rear light sideways to ensure it is correctly fitted.

– Fit the cover back onto the screw, with the notch pointing to the rear (2).

– Put the screwdriver back into the tool kit.

– Make sure that all bulbs for the rear lights are working. ▶

Caution

Take care when fitting the rear light unit to make sure there is no damage to the paintwork or any of its components. ■

Changing rear light bulbs (in boot lid)

Overview of rear lights

Fig. 226 Overview of rear lights

Rear lights in the boot lid

- Rear light
- Rear fog light
- Reversing light ■

Removing the bulb holder

The tailgate must be open to change the bulbs.

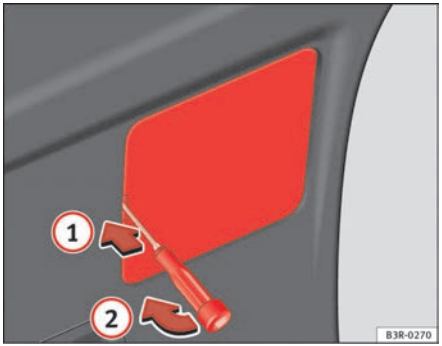

Fig. 227 Remove the cover of the tailgate trim

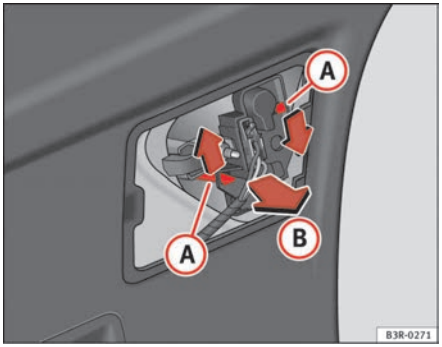

Fig. 228 Remove the bulb holder ▶

You can access the bulb holder for the inner rear lights via the inside of the tailgate.

– Check which of the bulbs is defective.

– Take the screwdriver out of the vehicle's tool kit ⇒ page 245.

– Insert the screwdriver into the opening in the cover ⇒ page 275, fig. 227 (1) and detach the cover (2).

– Press on the tabs (A) ⇒ page 275, fig. 228 in the direction of the arrows and remove the bulb holder by pulling in the direction of the arrow (B).

– Change the bulbs ⇒ page 276. ■

Changing bulbs

All bulbs can be changed easily in the bulb holder.

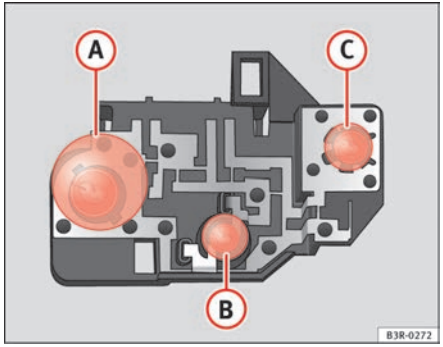

Fig. 229 Position of the bulbs in the bulb holder. Example: Rear lights in the tailgate

The bulbs are secured with a bayonet fastener. The table below gives an overview of the bulb positions.

– Lightly press the defective bulb into the bulb holder, then turn it to the left and remove it.

– Fit the new bulb, pressing it into the bulb holder and turn it to the right as far as it will go.

– Use a cloth to remove any fingerprints from the glass part of the bulb.

– Check whether the new bulb is working.

– Re-install the bulb holder ⇒ page 276.

Position of the bulbs

Pos. ⇒ fig. 229	Bulb function
A	Reverse light
B	Side lights
C	Rear fog light

■

Fitting the bulb holder

The bulb holder is easy to fit.

– Position the bulb holder on the rear light and align it so that it is securely seated.

– Press the bulb holder into the rear light until it engages.

– Fit the cover back in the interior trim so that it engages. ▶

– Put the screwdriver back into the tool kit.

– Make sure that all bulbs for the rear lights are working. ■

Side indicators

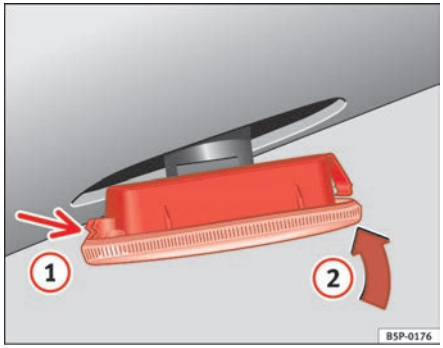

Fig. 230 Side indicator

– Press the indicator to the left or to the right to remove the lamp.

– Remove the lamp holder from the indicator.

– Remove the failed glass bulb and replace with a new bulb.

– Insert the lamp holder in the indicator guide until it clicks into place.

– First place the indicator in the opening in the bodywork, fixing the tabs ⇒ fig. 230, arrow (1).

– Insert the bulb as shown by the arrow (2) ⇒ fig. 230. ■

Luggage compartment lights

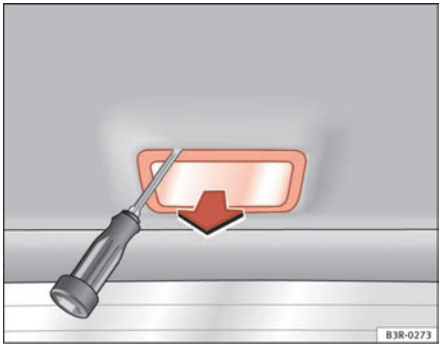

Fig. 231 Luggage compartment light

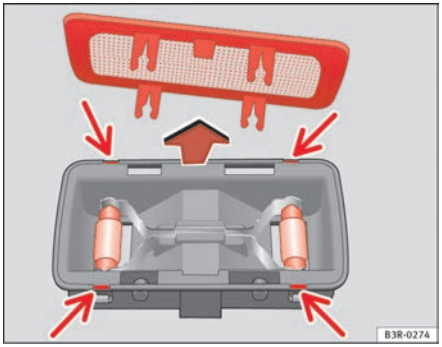

Fig. 232 Luggage compartment light

– Remove the tulip-shaped fitting by pressing on its inside edge using the flat side of a screwdriver.

– Remove the protective cover and remove the bulb from the housing. ■

Registration light

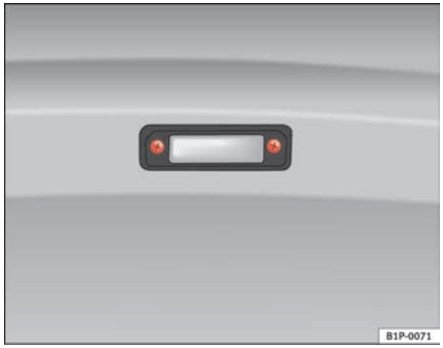

Fig. 233 Registration light

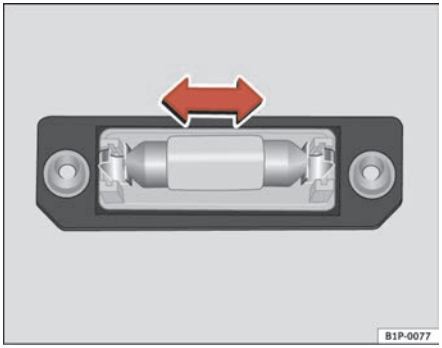

Fig. 234 Registration light

– To remove the tulip-shaped fitting, unscrew the bolts ⇒ fig. 233.

– Remove the bulb, moving it in the direction of the arrow and outwards ⇒ fig. 234.

– Installation is in the reverse order. ■

Sunroof light

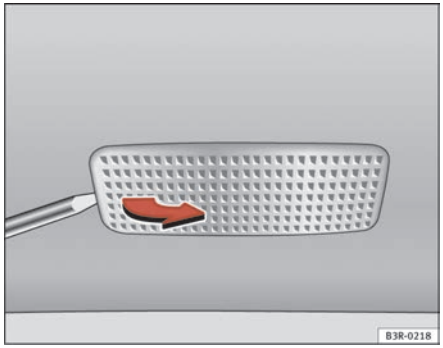

Fig. 235 Removing sunroof light

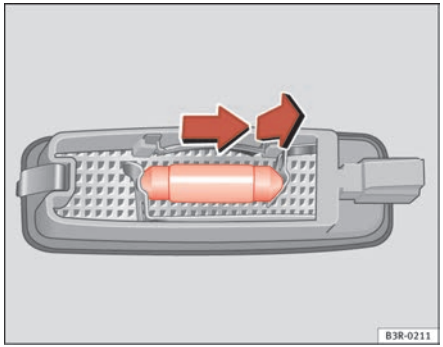

Fig. 236 Removing sun visor light

– Remove the bulb carefully, using the screwdriver on its flat side ⇒ fig. 235.

– Use a screwdriver to remove the protective cover.

– Remove the bulb, moving it in the direction of the arrow and outwards ⇒ fig. 236. ■

Jump-starting

Jump leads

The jump lead must have a sufficient wire cross section.

If the engine fails to start because of a discharged battery, the battery can be connected to the battery of another vehicle to start the engine.

Jump leads

Jump leads must comply with the standard **DIN 72553** (see manufacturer's documentation). The wire cross section must be at least 25 mm^2 for petrol engines and at least 35 mm^2 for diesel engines.

Note

- The vehicles must not touch each other, otherwise electricity could flow as soon as the positive terminals are connected.
- The discharged battery must be properly connected to the vehicle electrical system. ■

How to jump start: description

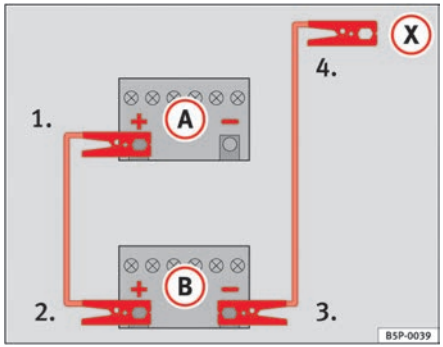

Fig. 237 How to connect the jump leads

⇒ fig. 237 (A) shows the flat battery and (B) the charged battery.

Jump lead terminal connections

– Switch off the ignition on both vehicles ⇒ ⚠.

1. Connect one end of the red jump lead to the positive ⇒ fig. 237 (+) terminal of the vehicle with the flat battery ⇒ ⚠.
2. Connect the other end of the red jump lead to the positive terminal (+) in the vehicle providing assistance.
3. Connect one end of the black jump lead to the negative terminal (-) on the battery of the vehicle providing assistance.
4. Connect the other end of the black jump lead (X) to a solid metal component which is bolted on to the engine block, or onto the engine block itself of the vehicle with the flat battery. Do not connect it to a point near the battery ⇒ ⚠.
5. Position the leads in such a way that they cannot come into contact with any moving parts in the engine compartment.

Starting

6. Start the engine of the vehicle with the boosting battery and let it run at idling speed.
7. Start the engine of the car with the flat battery and wait one or two minutes until the engine is “running”.

Removing the jump leads

8. Before you remove the jump leads, switch off the headlights (if they are switched on).
9. Turn on the heater blower and rear window heater in the vehicle with the flat battery. This helps minimise voltage peaks which are generated when the leads are disconnected.
10. When the engine is running, disconnect the leads in reverse order to the details given above.

Connect the battery clamps so they have good metal-to-metal contact with the battery terminals.

If the engine fails to start, switch off the starter after about 10 seconds and try again after about half a minute.

WARNING

- **Please note the safety warnings referring to working in the engine compartment ⇒ page 221.**
- **The battery providing assistance must have the same voltage as the flat battery (12V) and approximately the same capacity (see imprint on battery). Failure to comply could result in an explosion.**
- **Never use jump leads when one of the batteries is frozen. Danger of explosion! Even after the battery has thawed, battery acid could leak and cause chemical burns. If a battery freezes, it should be replaced.**
- **Keep sparks, flames and lighted cigarettes away from batteries, danger of explosion. Failure to comply could result in an explosion.**
- **Observe the instructions provided by the manufacturer of the jump leads.**
- **Do not connect the negative cable from the other vehicle directly to the negative terminal of the flat battery. The gas emitted from the battery could be ignited by sparks. Danger of explosion.**
- **Do not attach the negative cable from the other vehicle to parts of the fuel system or to the brake line.**
- **The non-insulated parts of the battery clamps must not be allowed to touch. The jump lead attached to the positive battery terminal must not touch metal parts of the vehicle, this can cause a short circuit.**
- **Position the leads in such a way that they cannot come into contact with any moving parts in the engine compartment.**
- **Do not bend over the batteries. This could result in chemical burns.**

Note

The vehicles must not touch each other, otherwise electricity could flow as soon as the positive terminals are connected. ■

Towing and tow-starting

Tow-starting

The use of jump leads is preferable to tow-starting.

We recommend that you do **not** tow-start your vehicle. Jump-starting is preferable ⇒ page 279.

However, if your vehicle has to be tow-started:

– Engage the 2nd or the 3rd gear.

– Keep the clutch pressed down.

– Switch the ignition on.

– Once both vehicles are moving, release the clutch.

– As soon as the engine starts, press the clutch and move the gear lever into neutral. This helps to prevent driving into the towing vehicle.

WARNING

The risk of accidents is high when tow-starting. The vehicle being towed can easily collide with the towing vehicle.

Caution

When tow-starting, fuel could enter the catalytic converter and damage it. ■

Comments

Please observe the following points if you use a tow-rope:

Notes for the driver of the towing vehicle

– Drive slowly at first until the tow-rope is taut. Then accelerate gradually.

– Begin and change gears cautiously. If you are driving an automatic vehicle, accelerate gently.

– Remember that the brake servo and power steering are not working in the vehicle you are towing. Brake earlier than you would normally, but with a more gentle pressure on the brake.

Notes for the driver of the towed vehicle

– Ensure that the tow-rope remains taut at all times when towing.

Tow-rope or tow-bar

It is easier and safer to tow a vehicle with a tow-bar. You should only use a tow-rope if you do not have a tow-bar.

A tow-rope should be slightly elastic to reduce the loading on both vehicles. It is advisable to use a tow-rope made of synthetic fibre or similarly elastic material.

Attach the tow-rope or the tow-bar only to the towing eyes provided or a towing bracket.

Driving style

Towing requires some experience, especially when using a tow-rope. Both drivers should be familiar with the technique required for towing. Inexperienced drivers should not attempt to tow-start or tow away another vehicle. ▶

Do not pull too hard with the towing vehicle and take care to avoid jerking the tow-rope. When towing on an unpaved road, there is always a risk of overloading and damaging the anchorage points.

The ignition of the vehicle being towed must be switched on to prevent the steering wheel from locking and also to allow the use of the indicators, horn, windscreen wipers and washers.

As the brake servo does not work if the engine is not running, you must apply considerably more pressure to the brake pedal than you normally would.

As the power assisted steering does not work if the engine is not running, you will need more strength to steer than you normally would.

Note

- Observe legal requirements when towing or tow-starting.
- Switch on the hazard warning lights of both vehicles. However, observe any regulations to the contrary.
- For technical reasons, vehicles with an automatic gearbox must not be tow-started.
- If damage to your vehicle means that there is no lubricant in the gearbox, you must raise the drive wheels while the vehicle is being towed.
- If the vehicle has to be towed more than 50 km, the front wheels must be raised during towing, and towing should be carried out by a qualified person.
- The steering wheel is locked when the vehicle has no electrical power. The vehicle must then be towed with the front wheels raised. Towing should be carried out by a qualified person.
- The towing eye should always be kept in the vehicle. Please refer to the notes ⇒ page 282, “Tow-starting”. ■

Front towing eye

Fig. 238 Fitting the towing eye to front rear of the vehicle

Fitting the towing eye

– Take the towing ring from the onboard tool set.

– Remove the front cover by pressing down on the right hand side.

– Bolt the eye to its limit to the *left*, in the direction of the arrow ⇒ fig. 238 ■

Rear towing eye

There is a towing eye at the rear on the right below the rear bumper. ■

Technical Data

General notes on the technical data

Outstanding information

Important considerations

All data in the official vehicle documents take precedence over this data.

All data provided in this manual are valid for the standard model in Spain. The vehicle data card included in the Maintenance Programme or the vehicle registration documents shows which engine is installed in the vehicle.

The figures may be different depending on if additional equipment is fitted, for different models, for special vehicles and for other countries.

Abbreviations used in this paragraph of the Technical Data

Abbreviation	Meaning
kW	Kilowatt, engine power measurement.
bhp	Brake horse power, formerly used to denote engine power
at rpm	Revolutions per minute - engine speed.
Nm	Newton metres, unit of engine torque.
l/100 km	Fuel consumption in litres per 100 km.
g/km	Carbon dioxide emissions in grams per km travelled.
CO_2	Carbon dioxide
CN	Cetane number, indication of the diesel combustion power.
RON	Research octane number, indication of the knock resistance of petrol.

Vehicle identification data

The most important data are given on the type plate and the vehicle data sticker.

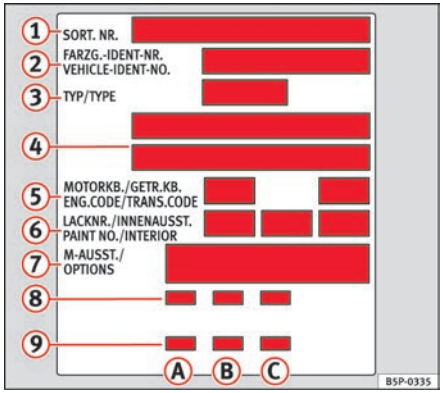

Fig. 239 Vehicle data sticker – boot

Vehicles for certain export countries do not have a type plate.

Type plate

The type plate is located on the left rib inside the engine compartment.

Vehicle identification number

The vehicle identification number (chassis number) can be read from outside the vehicle through a viewer in the windscreen. This is located on the left-hand side of the vehicle in the lower area of the windscreen. It is also located on the right hand side of the engine compartment.

Vehicle data

The data sticker is placed on the inside of the spare wheel recess in the luggage compartment.

The following information is provided on the vehicle data sticker: ⇒ fig. 239.

These data are also provided in the Maintenance Program.

1. Production control number
2. Vehicle identification number (chassis number)
3. Model code number
4. Model designation / engine power output
5. Engine and gearbox code letters
6. Paintwork number / interior trim code
7. Optional equipment codes
8. Consumption values
9. CO_2 emissions values

Data from 2 to 9 are also provided in the Maintenance Program.

Consumption figures and CO_2

- A Consumption (litres/100 km) / CO_2 emissions (g/km) urban
- B Consumption (litres/100 km) / CO_2 emissions (g/km) motorway
- C Consumption (l/100 km) / CO_2 Emissions (g/km) mixed

Data on fuel consumption

Fuel consumption

The consumption and emission details shown on the vehicle data sticker differ from one vehicle to another.

The fuel consumption and CO_2 emissions of the vehicle can be found on the vehicle data sticker.

The fuel consumption and emissions figures given are based on the vehicle weight category, which is determined according to the engine/gearbox combination and the equipment fitted.

The consumption and emission figures are calculated in accordance with the EC test requirements 1999/100/EC. These test requirements specify a realistic test method based on normal everyday driving.

The following test conditions are applied:

Urban cycle	The urban cycle starts with an engine cold start. City driving is then simulated.
Extra urban cycle	In the extra urban cycle simulation the vehicle frequently accelerates and brakes in all gears, as in normal everyday driving. The road speed ranges from 0 to 120 km/h.
Total consumption	The average total consumption is calculated with a weighting of around 37% for the urban cycle and 63% for the extra urban cycle.
CO_2 emissions	The exhaust gases are collected during both driving cycles to calculate carbon dioxide emissions. The gas composition is then analysed to evaluate the CO_2 content and other emissions.

Note

- Actual consumption may vary from quoted test values, depending on personal driving style, road and traffic conditions, the weather and the vehicle condition. ■

Weights

Kerb weight refers to the basic model with a fuel tank filled to 90% capacity and without optional extras. The figure quoted includes 75 kg to allow for the weight of the driver.

For special versions and optional equipment fittings or for the addition of accessories, the weight of the vehicle will increase ⇒ ⚠.

WARNING

- **Please note that the centre of gravity may shift when transporting heavy objects; this may affect the vehicle's handling and lead to an accident. Always adjust your speed and driving style to suit road conditions and requirements.**
- **Never exceed the gross axle weight rating or the gross vehicle weight rating. If the allowed axle load or the allowed total weight is exceeded, the driving characteristics of the vehicle may change, leading to accidents, injuries and damage to the vehicle.** ■

Towing a trailer

Trailer weights

Trailer weights

The trailer weights and drawbar loads approved are selected in intensive trials according to precisely defined criteria. The approved trailer weights are valid for vehicles in the *EU* for maximum speeds of 80 km/h (in certain circumstances up to 100 km/h). The figures may be different in other countries. All data in the official vehicle documents take precedence over these data ⇒ ⚠.

Drawbar load

The *maximum* permitted weight exerted by the trailer drawbar on the ball joint of the towing bracket must not exceed **75 kg**.

In the interest of road safety, we recommend that you always tow approaching the maximum drawbar load. The response of the trailer on the road will be poor if the drawbar load is too small.

If the maximum permissible drawbar load cannot be met (e.g. with small, empty and light-weight single axle trailers or tandem axle trailers with an axle base of less than 1 metre), at least 4% of the actual trailer weight is a legal stipulation for a drawbar load.

⚠ WARNING

- **For safety reasons, do not exceed the 80 km/h limit. This is also valid in countries where higher speeds are permitted.**
- **Never exceed the maximum trailer weights or the draw bar loading. If the permissible axle load or the permissible total weight is exceeded, the driving characteristics of the vehicle may change, leading to accidents, injuries and damage to the vehicle.** ■

Wheels

Tyre pressure, snow chains, wheel bolts

Tyre pressures

The sticker with the tyre pressure values can be found on the inside of the tank flap. The tyre pressure values given there are for *cold* tyres. The slightly raised pressures of warm tyres must not be reduced. ⇒ ⚠

Snow chains

Snow chains may be fitted only to the *front wheels*.

Consult the chapter “wheels” of this manual.

Wheel bolts

After the wheels have been changed, the **tightening torque** of the wheel bolts should be checked as soon as possible with a torque wrench ⇒ ⚠. The tightening torque for steel and alloy wheels is **120** Nm.

⚠ WARNING

- **Check the tyre pressure at least once per month. Checking tyre pressure value is very important. If the tyre pressure is too high or too low, there is an increased danger of accidents, particularly at high speeds.**
- **If the torque of the wheel bolts is too low, they could loosen while the vehicle is in motion. Risk of accident! If the tightening torque is too high, the wheel bolts and threads can be damaged.**

Note

We recommend that you ask your Authorised Service Centre for information about appropriate wheel, tyre and snow chain size. ■

Technical Data

Checking fluid levels

From time to time, the levels of the different fluids in the vehicle must be checked. Never fill with incorrect fluids, otherwise serious damage to the engine may be caused.

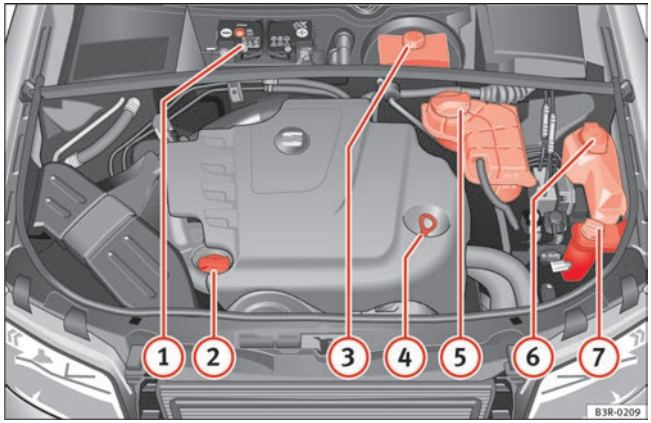

Fig. 240 Diagram for the location of the various elements

1. Vehicle battery
2. Engine oil filler cap
3. Brake fluid reservoir
4. Engine oil dipstick.
5. Coolant expansion tank
6. Windscreen washer fluid container
7. Hydraulic fluid reservoir for power steering

The checking and refilling of service fluids are carried out on the components mentioned above. These operations are described in the ⇒ page 221.

Overview

Further explanations, instructions and restrictions on the technical data are contained as of ⇒ page 285.

Note

The layout of parts may vary depending on the engine. ■

Petrol engine 1.6l 75 kW (102 HP)

General engine data

Power output in kW (HP)	rpm	75 (102) / 5600
Maximum torque	in Nm at 1/min	148 / 3800
No. of cylinders/ capacity	in cm ^{3}	4 / 1595
Compression		10,3 +/- 0,3
Fuel		Super 95 RON[a)]/Normal 91 RON[b)]

a) **R**esearch-**O**ctane-**N**umber = Measure of the antidetonator petrol power.
b) Slight power loss

Performance figures

Maximum speed	in km/h	186
Acceleration from 0-80 km/h	in sec.	8,9
Acceleration from 0-100 km/h	in sec.	13,1

Weights

Gross vehicle weight	in kg	1930
Weight in working order (with driver)	in kg	1445
Gross front axle weight	in kg	990
Gross rear axle weight	in kg	1070
Permitted roof load	in kg	75

Trailer weights

Trailer without brakes	720
Trailer with brakes, gradients up to 8%	1400
Trailer with brakes, gradients up to 12%	1200

Engine oil capacity

Approximate engine oil capacity with oil filter change	3.6 litres

Petrol engine 1.8l 110 kW (150 HP)

General engine data

Power output in kW (HP)	rpm	110 (150) / 5700
Maximum torque	in Nm at rpm	220 / 1800
No. of cylinders/ capacity	in cm^3	4 / 1781
Compression		9,5 +/- 0,3
Fuel		Super 98 RON[a)]/Super 95 RON[b)]

a) **R**esearch-**O**ctane-**N**umber = Measure of the antidetonator petrol power.
b) Slight power loss.

Performance figures

Maximum speed	in km/h	210
Acceleration from 0-80 km/h	in sec.	6,6
Acceleration from 0-100 km/h	in sec.	9,6

Weights

Gross vehicle weight	in kg	2020
Weight in running order (with driver)	in kg	1535
Gross front axle weight	in kg	1065
Gross rear axle weight	in kg	1085
Permitted roof load	in kg	75

Trailer weights

Trailer without brakes	750
Trailer with brakes, gradients up to 8%	1600
Trailer with brakes, gradients up to 12%	1400

Engine oil capacity

Approximate engine oil capacity with oil filter change	4.4 litres

Petrol engine 2.0l 147 kW (200 HP)

General engine data

Power output in kW (HP)	rpm	147 (200) / 5100
Maximum torque	in Nm at rpm	280 / 1800
No. of cylinders/ capacity	in cm^3	4 / 1984
Compression		10,3 +/- 0,3
Fuel		Super 98 RON[a)]/Super 95 RON[b)]

a) **R**esearch-**O**ctane-**N**umber = Anti-detonation rating of the petrol.
b) Slight power loss.

Performance figures

Maximum speed	in km/h	231
Acceleration from 0-80 km/h	in sec.	5,6
Acceleration from 0-100 km/h	in sec.	7,6

Weights

Gross vehicle weight	in kg	2050
Weight in running order (with driver)	in kg	1565
Gross front axle weight	in kg	1090
Gross rear axle weight	in kg	1090
Permitted roof load	in kg	75

Trailer weights

Trailer without brakes	750
Trailer with brakes, gradients up to 8%	1600
Trailer with brakes, gradients up to 12%	1400

Engine oil capacity

Approximate engine oil capacity with oil filter change	4.5 litres

Diesel engine 2.0l 105 kW (143 HP)

General engine data

Power output in kW (HP)	rpm	105 (143) / 4200
Maximum torque	in Nm at rpm	320 / 1750-2500
No. of cylinders/ capacity	in cm^3	4 / 1968
Compression		16,5 +/- 0,3
Fuel		Min. 51 CN[a)]

[a)] **C**etane-**N**umber (cetane index) = Measure of the combustion power of the diesel

Performance figures

Maximum speed	in km/h	207
Acceleration from 0-80 km/h	in sec.	6,6
Acceleration from 0-100 km/h	in sec.	9,6

Weights

Gross vehicle weight	in kg	2050
Weight in running order (with driver)	in kg	1565
Gross front axle weight	in kg	1100
Gross rear axle weight	in kg	1075
Permitted roof load	in kg	75

Trailer weights

Trailer without brakes	750
Trailer with brakes, gradients up to 8%	1800
Trailer with brakes, gradients up to 12%	1600

Engine oil capacity

Approximate engine oil capacity with oil filter change	4.6 litres

Diesel engine 2.0l 125 kW (170 HP)

General engine data

Power output in kW (HP)	rpm	125 (170) / 4200
Maximum torque	in Nm at rpm	350 / 1750-2500
No. of cylinders/ capacity	in cm^3	4 / 1968
Compression		16,5 +/- 0,3
Fuel		Min. 51 CN[a)]

a) **C**etane-**N**umber (cetane index) = Measure of the combustion power of the diesel

Performance figures

Maximum speed	in km/h	224
Acceleration from 0-80 km/h	in sec.	6,1
Acceleration from 0-100 km/h	in sec.	8,6

Weights

Gross vehicle weight	in kg	2075
Weight in running order (with driver)	in kg	1590
Gross front axle weight	in kg	1115
Gross rear axle weight	in kg	1090
Permitted roof load	in kg	75

Trailer weights

Trailer without brakes	750
Trailer with brakes, gradients up to 8%	1800
Trailer with brakes, gradients up to 12%	1600

Engine oil capacity

Approximate engine oil capacity with oil filter change	4.6 litres

Dimensions and capacities

Dimensions		
Length, width	4,666 mm/ 1,772 mm	
Height at kerb weight	1454 mm with roof bars	
Front and rear projection	976 mm/ 1,048 mm	
Wheelbase	2,642 mm	
Turning circle	11.2 m	
Track width[a)]	**Front**	**Rear**
	1,522 mm	1,523 mm
Capacities		
Fuel tank	70 l. Reserve 10 l.	
Windscreen washer fluid container with headlight washer	4.8 l.	
Tyre pressure		
Summer-grade tyres: The correct tyre pressure can be seen on the sticker on the inside of the tank flap. **Winter tyres:** The pressure of these tyres is the same as the summer tyre pressure plus 0.2 bar.		

a) This data will change depending on the type of wheel rim.

Index

A

Accessories 214
Towing 196
Air conditioner
2C-Climatronic 160
Defrosting 164
Solar-powered blower/solar roof 169
Air duct
Fitting 260, 267
Removing 259, 266
Air purity sensor 165
Airbag
Warning lamp 66
Airbag covers 33
Airbag system 28
Curtain airbags 41
Front airbags 31
Side airbags 37
Warning lamp 29
Alternator
Warning lamp 69
Ambient temperature display 72
Anti-freeze 225
Anti-lock brake system
How it works 184
Anti-puncture tyres 241
Anti-theft alarm system 108
Interior monitoring 109
Aquaplaning 240
Armrest
Storage compartment in front armrest 142
Armrests
Adjusting the front armrest 142
Ashtray
Front 154
Rear 154
Athermic windscreen 215
Auto-check system 75
Automatic car wash tunnel 206
Automatic gearbox
Safety interlock for ignition key 171
Automatic headlight control 116

B

Background lighting 125
Battery 232
Battery voltage 81
Charging 234
Disconnection 232
Long periods of non-use 232
Replacing 232, 233
Testing 232
Winter operations 232, 233
Belt tension device
Disposal 27
Warning lamp 29
Belt tension devices 26
Bicycle rack
Towing 196
Biodiesel 218
Biodiesel fuel 218
Bonnet 220
Closing 222
Opening 220
Releasing 220
Brake light
Failure control 80
Brake pads 189
Brake servo 189
Brake system
Brake servo 186
Brakes 186
Malfunction 77
Brakes 189
Brake assist system 184
Brake fluid 231
Worn brake pads 80
Braking distance 189
Bulb change
general notes 258

C

Car keys 96
Catalytic converter 190
CD-ROM player 149
Central locking 99
Manual locking 102
Sunroof: opening and closing 114
Central locking system
Anti-theft security system 100
Locking 100
Locking and unlocking the vehicle from inside 101
Opening and closing the windows 111
Security central locking 102
Switch on the driver's door 101
Tailgate 103
Unlocking 100
Cetane number 218
Changing the main headlight bulb
Main headlight 262
Changing the main headlight bulbs
Dipped beam headlight 263
Changing the rear lights
luggage compartment lights 277
Changing windscreen wiper blades 229
Chassis number 286
Child safety 46
Child safety seat
ISOFIX system 52
Child seat 48
Categorisation in groups 48
Group 1 49
Group 2 49
Group 3 49
Groups 0 and 0+ 48
Safety notes 46
Securing 51
Child seats
on the front passenger seat 29
Childproof lock
Rear doors 105
Cigarette lighter 155
Cleaning alloy wheel rims 210
Cleaning chrome 209
Cleaning engine compartment 211
Cleaning steel wheel rims 210
Cleaning windows 208
Climate control
Air distribution 167
Air outlets 167
Air purity sensor 165
Air recirculation 164
Air recirculation (automatic) 165
Automatic mode 163
Blower 166
Controls 162
ECON Mode (economy) 164
Economical use 168
Key settings 168
Temperature selection 163
Clock, setting 61
Cloth seat covers cleaning 212
Coat hooks 158
Cockpit 57
Overview 57
Compartments 156
In the door trim 158
In the front seats 159
Cool box in glove compartment 157
Cooling system
Coolant temperature gauge 60
Malfunction 78
Cruise control system 178
Adjust stored speed 179
Disabling 180
Disabling temporarily 180
Setting speed 179
Curtain airbags 41
Description 41
Function 42
Safety notes 42

D

Danger of fitting a child seat on the front passenger seat 29
Dash panel cleaning 211
Data entry control 88
Date display 61
Daytime running lights 121
Diesel 218

Diesel engine
Winter driving 219
Diesel engine particulate filter 191
Diesel particulate filter 80
Engine oil 222
Digital clock 61
Dipped headlights 116
DIS
Average fuel consumption 85
Average speed 85
Driving time 85
Instantaneous fuel consumption 85
Disabling front passenger airbag
Safety notes 45
Disabling the airbag
Disabling front passenger airbag 44
Disposal
Airbags 30
Distance covered 86
Distance display 63
Door catch/ tailgate warning 74
Door lock cylinders 209
Doors
Childproof lock 105
Locking the doors manually if the central locking fails to work 102
Driver information system 71
Ambient temperature display 72
Auto-check system 75
CD and radio display 72
Door catch/ tailgate warning 74
Driver messages 76
Handbrake warning 76
Menu display 87
On-board computer 85
Red symbols 77
Speed warning 82
Warning messages 76
Yellow symbols 79
Driver messages 76
Driver's seat
Assigning the key to the seat 140
Enabling stored settings 139
With memory 138
Driving
Driving abroad 193
Economically / With Respect for the Environment 191
Driving abroad 193
Headlights 193
Driving safety 9

E

Economical driving 191
Electric windows 110
Central locking system 111
Possible malfunctions 112
Switch on font passenger's door 111
Switch on rear doors 111
Switches in the driver's door 110
Electrical power point 155
Electronic differential lock
How it works 185
Electronic immobiliser 98
Electronic stabilisation programme
Description 170
How the system works 183
Warning light 171
Emergencies
Changing a wheel 248
Disconnecting the battery 232
Jack 245, 250
Tools 245
tyre mobility system 246
Engine
Running in 189
Starting 172
Stop 173
Engine compartment
Safety instructions 221
Engine oil 222
Checking oil level 224
Consumption 224
Oil pressure too low 78
Oil properties 223
Oil sensor defective 80
Topping up 224
Environment 191
Environmental friendliness 192
Environmental tip
Avoiding pollution 217
Environmentally friendly driving 191

Exhaust gas purification system 190
Exterior mirrors 208

F

Fabric trim cleaning 212
Fastening rings 17
Filling the tank
  Releasing the tank flap manually 217
Floor mats 16
Fog lights 118
Front airbags 31
  Description 31
Front drink holders 153
Front passenger airbag deactivation 44
Frontal airbags
  Operation 32
  safety notes 34
Fuel
  Diesel 218
  Fuel gauge 63
  Fuel level low 80
  Instantaneous fuel consumption 85
  Petrol 218
Fuel range 73, 85
Fuel tank
  opening the fuel tank flap 216
Fuel: save 191
Fuse
  Assignment 257
  Changing 256

G

Gear display 73
Gear shift pattern 181
General overview of the engine compartment 289
Glove compartment 157
  Cool box 157
  Light 124

H

Handbrake 174
Hazard warning lights 122
Head restraint
  Rear seat 142
Head restraints
  Front seats 140
  Rear seats 141
  Removing and fitting 141
head restraints, correct adjustment 13
  In-use and non-use positions 14
Headlight range control 120
  Dynamic 121
  Faulty 81
Headlights 116
  Automatic headlight control 117
  Automatic headlight control photosensors 117
  Coming home function 119
  Driving abroad 193
  Front fog lights 118
  Headlight range control 120
  Headlight washer system 131
  Leaving home function 119
  Self-directing headlights 122
Heated
  Seats 169
Heated rear window 127
Heated seat 169
High pressure cleaners 207
Horn 57

I

Identification number 286
Ignition key
  Safety interlock 171
Ignition lock 171
Indicator lamps
  Cruise control system 67
  Glow plug system 70
  Hazard warning lights 68
  Indicators 68
  Main beam headlights 69
  Trailer indicators 67
Indicator lamps - overview 65
Indicators 123
Instruments
  Lighting 62, 120
Interior lights
  Background lighting 125
  Front 124

Luggage compartment 126
Rear 126
Interior monitoring 109
Intermittent wipe 128
ISOFIX 52

J

Jack 245, 250
Jump leads 279
Jump-starting 279

K

Key tab 96
Keys 96
Battery 98
Climate control settings 168
Remote control key 106
Settings for the driver's seat 140

L

Leather cleaning 212
Light sensor faulty 80
Lighting
Instruments 62, 120
Lights 116
Automatic headlight control 116
Cornering light 122
Dipped headlights faulty 81
Dynamic headlight range control 121
Headlight flasher 124
Parking light 124
Rear lights faulty 81
Self-directing headlights 122
Switching on and off 116
Xenon lights 121
Liquid coolant
Anti-freeze 225
Checking the level 226
Liquid coolant additive 225
Topping up 227
Load compartment in the boot
See Luggage compartment 16
Locking the doors manually if the central locking fails to work
Locking the doors manually if the central locking fails to work 102
Locks 209
Long periods of non-use
Battery 232
Luggage compartment 16, 143
Cover 145
Extending 149
Fastening rings 144
Light 126
Loading 143
Luggage compartment liner 148
Luggage net 144
Partition grille 146
Retaining strap 145
Side storage compartment 149
Ski bag 150
See also Luggage compartment 16
Luggage compartment cover
Removing 147

M

Main beam headlights 123
Maintenance
airbags 30
Maintenance and cleaning 205
Manual gearbox 181
Manual operation
Closing the sunroof manually 115
Fuel tank flap 217
Mirrors
Anti-dazzle interior rear-view mirror with automatic adjustment 131
Automatic exterior mirror adjustment 138
Enabling stored settings 139
Heated exterior mirrors 132
Make-up mirrors 127
Storing settings 139
Mobile telephones and radiotelephones 215

N

Number of seats 18

O

Observations 193

Octane number 218
Oil consumption 224
Oil dipstick 224
Oil level
Check level 80
Oil properties 223
On-board computer 85
Override function
Sunroof override function 114
Overview
Cockpit 57

P

Paintwork
Polishing 208
Parking 175
Parking aid 175
SEAT parking system 176
SEAT parking system plus 176
Partition grille
Removing 147
Pedals 15
Petrol 218
Driving abroad 193
Petrol additives 218
Physical principles of a frontal collision 19
Plastic key tab 96
Plastic parts 208
Plastic parts cleaning 211
Power point 156
Power steering 187
Products for vehicle maintenance 205

Q

Quartz clock 61

R

Radiator fan 227
Radio display 72
Rain sensor 128
Rain sensor faulty 80
Reading lights
Front 124
Rear 126
Rear drinks holder 153
Rear fog light 118
Rear seat bench 149
Rear side window sun blind 128
Rear view mirror
With manual anti-dazzle setting 131
Rear view mirrors
Anti-dazzle setting 131
Interior rear view mirror 131
Rear window heating
Heating element wires 209
Rear window sun blind 128
Rear window wash/wipe
Automatic rear window wash/wipe 130
Rear window wiper
Automatic rear window wash/wipe 130
Intermittent wipe 130
Refuelling 216
Registration light 278
Remote control key
Indicator light 97
Locking and unlocking 106
Locking and unlocking the vehicle 106
Replacing the battery 97
Remote control keys 96
Re-synchronising 107
Removing and fitting the wheel 251
Repairs
airbags 30
Replacement of parts 214
Rev counter 61
Reverse gear
Manual gearbox 181
Roof carrier 151
Attachment points 152
Roof load 152
Roof rails 151
Rubber seals 209
Running in
Engine 189

S

SAFE 98

Safe driving 7
Aspects to take into account 8
Before setting off 8
Driving safety 8
Safety 9
Safety equipment 7
Safety instructions
Engine compartment 221
Safety notes
Airbags 30
Belt tension devices 27
Curtain airbags 42
Disabling front passenger airbag 45
frontal airbags 34
side airbags 40
Using child seats 46
Using seat belts 21
Seals 209
Seat adjustment
Lumbar support 137
Seat belt position
Pregnant women 24
Seat belts 23
Seat belt protection 21
Seat belt release 25
Seat belt warning lamp 18
Seat belts 18
adjustment 22
Height adjustment 25
Incorrectly fastened 26
Not worn 20
Safety notes 21
Warning lamp 18, 68
Seat belts cleaning 213
Seat heating 169
Seats 18
Electric adjustment 136
Electric backrest adjustment 137
Manual adjustment 134
Manual adjustment of lumbar support . . . 135
Manual backrest angle adjustment 135
Moving the seat forwards and backwards . 134
Seat height adjustment 134
Self-directing headlights 122
faulty 81
Service indicator 74
Servotronic 188
Shoes 15
Side airbags 37
Description 37
Function 38
Safety notes 40
Side lights 116
Sitting position
Driver 10
Front passenger 11
Incorrect sitting position 14
Passengers 12
Sitting position, occupants 10
Ski bag 150
Snow chains 244, 288
Solar-powered blower/solar roof 169
Spare keys 96
Spare parts 214
Spare wheel
Steel rim 247
Speed warning 81, 82
Speed warning function 82
Speedometer 63
Steam jets 207
Steering
Locking 171
Manual steering wheel adjustment 170
Steering wheel controls 91
Stopping the engine 173
Sun roof
Opening 113
Sun roof / deflector 112
Sun visors 127
Sunroof 114
Automatic close function 114
Closing 113
Manual operation 115
Override function 114
Supplementary heating 169
Switches in the driver's door
Electric windows 110
Symbols
Red symbols in central display 77
Yellow symbols in central display 79

T

Tailgate
- Central locking system 103
- Light 126

TCS
- How the system works 186

Technical modifications 214
The danger of not using the seat belt 20
The environment
- Heated rear window 127
- Leaks 221
- Roof carriers 152
- Warming up the engine 172

Tightening torque of wheel bolts 288
Tools 245
Tow starting
- Comments 282

Towing 194, 282
- Accessories 196
- Notes on towing 194, 195
- Removable towing bracket 197
- Technical requirements 194

Towing a trailer 288
Towing bracket, fitting 203
Towing eye 282
Towing eyes 283
Tow-starting 282
Traction control system
- How the system works 186

Trailer weights 288
Trip recorder 63
Type plate 286
Tyre Mobility System 253
Tyre mobility system 246
Tyre pressure 66, 90, 236
- Loss 238

Tyre pressure monitoring 237
Tyre pressure monitoring system 89
Tyre pressures 288
Tyre repair kit
- Tyre Mobility System 253

Tyres and wheels
- Dimensions 242

Tyres service life 239
Tyres tread depth 240
Tyres with directional tread pattern 236

U

Underbody maintenance 210

V

Vehicle data 286
Vehicle identification data 286
Vehicle identification number 286
Vehicle Maintenance
- Exterior 206

Vehicle modifications 214
Vehicle paintwork
- Products for vehicle maintenance 205
- Waxing 207

Vehicle washing 206
Ventilation slits 17

W

Warning lamp 29
- Alternator 69

Warning lamps
- Airbag 66
- Anti-lock brake system 67
- Electronic differential lock 67
- Electronic stabilisation programme 68
- Engine management (EPC) 69
- Exhaust emission control system 66
- Handbrake 70
- Red symbols in central display 77
- Seat belt warning lamp 68
- Yellow symbols in central display 79

Warning lamps - overview 65
Washer fluid level 81
Washing by hand 206
Washing with high pressure cleaners 207
Wear indicators 240
Wheel bolts 288
- Torque 243

Wheels 236, 288
- Changing a wheel 248

Why assume the correct sitting position? 28

Why should head restraints be correctly adjusted? 13
Why wear seat belts? 19, 28
Why wear seatbelts? 18
Windows
Defrosting 164
Windscreen washer system 228
Windscreen wiper blades
Cleaning 209
Windscreen wipers 128
Changing blades 229
Changing the rear blade 230
Rain sensor 128
Washer jets 128
Winter
Battery 232
Winter conditions
Defrost function 164
Winter driving
Diesel engine 219
Winter operations
Battery 233
Winter tyres 243
Wiper and washer system 128
Wooden trim cleaning 212

SEAT S.A. is permanently concerned about continuous development of its types and models. For this reason we ask you to understand, that at any given time, changes regarding shape, equipment and technique may take place on the car delivered. For this reason no right at all may derive based on the data, drawings and descriptions in this current handbook.

All texts, illustrations and standards in this handbook are based on the status of information at the time of printing. Except for error or omission, the information included in the current handbook is valid as of the date of closing print.

Re-printing, copying or translating, whether total or partial is not allowed unless SEAT allows it in written form.

SEAT reserves all rights in accordance with the "Copyright" Act.

All rights on changes are reserved.

This paper has been manufactured using bleached non-chlorine cellulose.

© SEAT S.A. - Reprint: 15.02.09

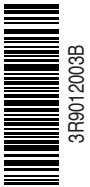

Inglés 3R9012003B (02.09) (GT9)

SEAT