VOLVO C70

OWNER'S MANUAL

Web Edition

Welcome to the world-wide family of Volvo owners. We trust that you will enjoy many years of safe driving in your Volvo, an automobile designed with your safety and comfort in mind. We encourage you to familiarize yourself with the equipment descriptions and operating instructions in this manual. We also urge you and your passengers to wear seat belts at all times in this (or any other) vehicle. And, of course, please do not operate a vehicle if you may be affected by alcohol, medication or any impairment that could hinder your ability to drive.

Your Volvo is designed to meet all applicable federal safety and emission standards. For further information please contact your retailer, or:

In the USA: Volvo Cars of North America, LLC Customer Care Center

1 Volvo Drive

P.O. Box 914

Rockleigh, New Jersey 07647

1-800-458-1552

www.volvocars.us

In Canada: Volvo Cars of Canada Corp

National Customer Service

175 Gordon Baker Road

North York, Ontario M2H 2N7

1-800-663-8255

www.volvocanada.com

2009 © Volvo Car Corporation, All rights reserved.

Contents

00 Introduction

General information..... 10
Volvo and the environment..... 12
Important warnings..... 13

01 Safety

Occupant safety..... 16
Seat belts..... 18
Supplemental Restraint System..... 21
Occupant Weight Sensor (OWS)..... 26
Side impact protection airbags..... 29
Door Mounted Inflatable Curtain system (DMIC) 30
Roll-over Protection system (ROPS) 31
Crash mode..... 32
Child safety..... 33
Child restraint systems..... 35
Infant seats..... 37
Convertible seats..... 39
Booster cushions..... 41
ISOFIX lower anchors..... 42
Child restraint registration and recalls..... 43

02 Instruments and controls

Instrument overview..... 46
Instrument panel..... 49
Indicator and warning symbols..... 51
Symbols – instrument panel..... 53
Information display..... 56
12-volt sockets..... 58
Lighting panel..... 59
Left-side steering wheel lever..... 61
Trip computer..... 63
Cruise control*..... 65
Right-side steering wheel lever..... 67
Steering wheel adjustment, Hazard warning flashers..... 69
Parking brake..... 70
Power windows..... 71
Mirrors..... 72
Personal settings..... 75
HomeLink® Wireless Control System*..... 77

* Option/accessory, for more information, see Introduction.

03 Climate

General information..... 82
Air vents..... 84
Electronic Climate Control 85
Air distribution..... 88

04 Interior

Front seats..... 92
Power retractable hard top 100
Interior lighting..... 106
Storage compartments..... 108
Trunk 113

05 Locks and alarm

Remote key and key blade..... 118
Valet locking 122
Keyless drive*..... 124
Locking and unlocking..... 128
Alarm*..... 130

06 Starting and driving

General information..... 136
Fuel requirements..... 139
Ignition switch..... 142
Starting the vehicle..... 143
Starting the vehicle with keyless drive*... 145
Manual transmission, 6-speed*..... 146
Automatic transmission*..... 147
Shiftlock override..... 149
Brake system..... 150
Stability system..... 152
Towing..... 154
Jump starting..... 157
Towing a trailer..... 158
Detachable trailer hitch..... 160
Transporting loads..... 161
Blind Spot Information System (BLIS)*… 162
Park assist*..... 166

07 Wheels and tires

General information..... 172
Tire inflation..... 175
Inflation pressure—U.S. models 177
Inflation pressure—Canadian models 178
Tire designations..... 179
Glossary of tire terminology..... 181
Vehicle loading..... 182
Uniform tire quality gradings..... 184
Snow chains, snow tires, studded tires.. 185
Temporary spare..... 186
Wheel nuts..... 187
Changing a wheel..... 188
Tire Sealing System 190
Tire Pressure Monitoring System (TPMS) 195

08 Car care

Washing and cleaning the car..... 200
Paint touch up..... 204

* Option/accessory, for more information, see Introduction.

09 Maintenance and servicing

Volvo maintenance..... 208
Maintaining your car..... 210
Hood..... 212
Engine compartment..... 213
Engine oil..... 214
Fluids..... 216
Wiper blades..... 218
Battery..... 219
Replacing bulbs..... 221
Fuses..... 228

10 Audio

Audio functions..... 238
Radio functions..... 243
CD player/CD changer..... 251
Audio menu..... 255
Bluetooth® hands-free connection..... 256

11 Specifications

Label information..... 264
Dimensions and weights..... 266
Fuel, oils, and fluids..... 269
Engine oil..... 271
Engine specifications..... 272
Electrical system..... 274
Three-way catalytic converter..... 276
Volvo programs..... 277

12 Index

Index..... 278

General information

About this manual

- Before you operate your vehicle for the first time, please familiarize yourself with the new-engine oil consumption information, see page 214. You should also be familiar with the information found in the chapters "Instruments and controls", and "Starting and driving".
- Information contained in the balance of the manual is extremely useful and should be read after operating the vehicle for the first time.
- The manual is structured so that it can be used for reference. For this reason, it should be kept in the vehicle for ready access.

Options and accessories

Optional or accessory equipment described in this manual is indicated by an asterisk.

Optional or accessory equipment may not be available in all countries or markets. Please note that some vehicles may be equipped differently, depending on special legal requirements.

Optional or accessory equipment may not be available in all countries or markets. Please note that some vehicles may be equipped differently, depending on special legal requirements.

Contact your Volvo retailer for additional information.

NOTE

- All information, illustrations and specifications contained in this manual are based on the latest product information available at the time of publication.
- Volvo reserves the right to make model changes at any time, or to change specifications or design without notice and without incurring obligation.
- Do not export your Volvo to another country before investigating that country's applicable safety and emission control requirements. In some cases it may be difficult or impossible to comply with these requirements. Modifications to the emission control system(s) may render your Volvo not certifiable for legal operation in the U.S., Canada and other countries.

WARNING

If your vehicle is involved in an accident, unseen damage may affect its driveability and safety.

WARNING

CALIFORNIA proposition 65

Engine exhaust, some of its constituents, and certain vehicle components contain or emit chemicals known to the state of California to cause cancer, and birth defects or other reproductive harm. In addition, certain fluids contained in vehicles and certain products of component wear contain or emit chemicals known to the State of California to cause cancer, and birth defects or other reproductive harm.

WARNING

Certain components of this vehicle such as air bag modules, seat belt pretensioners, adaptive steering columns, and button cell batteries may contain Perchlorate material. Special handling may apply for service or vehicle end of life disposal.

See www.dtsc.ca.gov/hazardouswaste/perchlorate.

Shiftlock (automatic transmission)

When your car is parked, the gear selector is locked in the Park (**P**) position. To release the selector from this position, turn the ignition key to position **II** (or start the engine), depress the brake pedal, press the button on the front side of the gear selector and move the selector from Park (**P**).

General information

Keylock (automatic transmission)
When the ignition is switched off, the gear selector must be in the Park (**P**) position before the key can be removed from the ignition switch.

Anti-lock Brake System (ABS)
The ABS system in your car performs a self-diagnostic test when the vehicle first reaches the speed of approximately 12 mph (20 km/h). The brake pedal will pulsate several times and a sound may be audible from the ABS control module. This is normal.

Fuel filler door
Press the button on the light switch panel when the car is at a standstill to open the fuel filler door.

Fuel filler cap
After refueling, close the fuel filler cap by turning it clockwise until it clicks into place. If this cap is not closed tightly or if the engine is running when the car is refueled, the Malfunction Indicator Lamp ("Check Engine" light) may indicate a fault.

Volvo and the environment

Volvo is committed to the well being of its customers. As a natural part of this commitment, we care about the environment in which we all live. Caring for the environment means an everyday involvement in reducing our environmental impact. Volvo's environmental activities are based on a holistic view, which means we consider the overall environmental impact of a product throughout its complete life cycle. In this context, design, production, product use, and recycling are all important considerations. In production, Volvo has partly or completely phased out several chemicals including CFCs, lead chromates, asbestos, and cadmium; and reduced the number of chemicals used in our plants 50% since 1991.

Volvo was the first in the world to introduce into production a three-way catalytic converter with a Lambda sond, now called the heated oxygen sensor, in 1976. The current version of this highly efficient system reduces emissions of harmful substances (CO, HC, NOx) from the exhaust pipe by approximately 95 – 99% and the search to eliminate the remaining emissions continues. Volvo is the only automobile manufacturer to offer CFC-free retrofit kits for the air conditioning system of all models as far back as the 1975 model 240. Advanced electronic engine controls and cleaner fuels are bringing us closer to our goal. After Volvo vehicles and parts have fulfilled their use, recycling is the next critical step in completing the life cycle. The metal content is about 75% of the total weight of a vehicle, which makes the vehicle among the most recycled industrial products. In order to have efficient and well-controlled recycling, dismantling information is available for all Volvo models. For Volvo, all homogeneous plastic parts weighing more than 3.4 oz. (100 grams) are marked with international symbols that indicate how the component is to be sorted for recycling. In addition to continuous environmental refinement of conventional gasoline-powered internal combustion engines, Volvo is actively looking at advanced technology alternative-fuel vehicles.

When you drive a Volvo, you become our partner in the work to lessen the car's impact on the environment. To reduce your vehicle's environmental impact, you can:

- Maintain proper air pressure in your tires. Tests have shown decreased fuel economy with improperly inflated tires.
- Follow the recommended maintenance schedule in your Warranty and Service Records Information booklet.
- Drive at a constant speed whenever possible.
- See a trained and qualified Volvo service technician as soon as possible for inspection if the check engine (malfunction indicator) light illuminates, or stays on after the vehicle has started.
- Properly dispose of any vehicle-related waste such as used motor oil, used batteries, brake pads, etc.
- When cleaning your vehicle, please use genuine Volvo car care products. All Volvo car care products are formulated to be environmentally friendly.

For additional information regarding the environmental activities in which Volvo Cars of North America, LLC and Volvo Car Corporation are involved, visit our Internet home page at: http://www.volvocars.us.

Accessory Installation

- We strongly recommend that Volvo owners install only genuine, Volvo-approved accessories, and that accessory installations be performed only by a trained and qualified Volvo service technician.
- Genuine Volvo accessories are tested to ensure compatibility with the performance, safety, and emission systems in your vehicle. Additionally, a trained and qualified Volvo service technician knows where accessories may and may not be safely installed in your Volvo. In all cases, please consult a trained and qualified Volvo service technician before installing any accessory in or on your vehicle.
- Accessories that have not been approved by Volvo may or may not be specifically tested for compatibility with your vehicle. Additionally, an inexperienced installer may not be familiar with some of your vehicle's systems.
- Any of your vehicle's performance and safety systems could be adversely affected if you install accessories that Volvo has not tested, or if you allow accessories to be installed by someone unfamiliar with your vehicle.
- Damage caused by unapproved or improperly installed accessories may not be covered by your new vehicle warranty. See your Warranty and Service Records Information booklet for more warranty information. Volvo assumes no responsibility for death, injury, or expenses that may result from the installation of nongenuine accessories.

Driver distraction

- Driver distraction results from driver activities that are not directly related to controlling the vehicle in the driving environment. Your new Volvo is, or can be, equipped with many feature-rich entertainment and communication systems. These include hands-free cellular telephones, navigation systems, and multipurpose audio systems. You may also own other portable electronic devices for your own convenience. When used properly and safely, they enrich the driving experience. Improperly used, any of these could cause a distraction.
- For all of these systems, we want to provide the following warning that reflects the strong Volvo concern for your safety:
- Never use these devices or any feature of your vehicle in a way that distracts you from the task of driving safely. Distraction can lead to a serious accident. In addition to this general warning, we offer the following guidance regarding specific newer features that may be found in your vehicle:
- Never use a hand-held cellular telephone while driving. Some jurisdictions prohibit cellular telephone use by a driver while the vehicle is moving.
- If your vehicle is equipped with a navigation system, set and make changes to your travel itinerary only with the vehicle parked.
- Never program your audio system while the vehicle is moving. Program radio presets with the vehicle parked, and use your programmed presets to make radio use quicker and simpler.
- Never use portable computers or personal digital assistants while the vehicle is moving.

A driver has a responsibility to do everything possible to ensure his or her own safety and the safety of passengers in the vehicle and others sharing the roadway. Avoiding distractions is part of that responsibility.

Occupant safety..... 16
Seat belts..... 18
Supplemental Restraint System..... 21
Occupant Weight Sensor (OWS)..... 26
Side impact protection airbags..... 29
Door Mounted Inflatable Curtain system (DMIC) 30
Roll-over Protection system (ROPS) 31
Crash mode..... 32
Child safety..... 33
Child restraint systems..... 35
Infant seats..... 37
Convertible seats..... 39
Booster cushions..... 41
ISOFIX lower anchors..... 42
Child restraint registration and recalls..... 43

G020871

SAFETY

01

Occupant safety

Volvo's concern for safety

Safety is Volvo's cornerstone. Our concern dates back to 1927 when the first Volvo rolled off the production line. Three-point seat belts (a Volvo invention), safety cages, and energy-absorbing impact zones were designed into Volvo cars long before it was fashionable or required by government regulation.

We will not compromise our commitment to safety. We continue to seek out new safety features and to refine those already in our cars. You can help. We would appreciate hearing your suggestions about improving automobile safety. We also want to know if you ever have a safety concern with your car. Call us in the U.S. at: 1-800-458-1552 or in Canada at: 1-800-663-8255.

Occupant safety reminders

How safely you drive doesn't depend on how old you are but rather on:

- How well you see.
- Your ability to concentrate.
- How quickly you make decisions under stress to avoid an accident.

The following suggestions are intended to help you cope with the ever changing traffic environment.

- Never drink and drive.
- If you are taking any medication, consult your physician about its potential effects on your driving abilities.
- Take a driver-retraining course.
- Have your eyes checked regularly.
- Keep your windshield and headlights clean.
- Replace wiper blades when they start to leave streaks.
- Take into account the traffic, road, and weather conditions, particularly with regard to stopping distance.

Reporting safety defects in the U.S.

If you believe that your vehicle has a defect which could cause a crash or could cause injury or death, you should immediately inform the National Highway Traffic Safety Administration (NHTSA) in addition to notifying Volvo Cars of North America, LLC. If NHTSA receives similar complaints, it may open an investigation, and if it finds that a safety defect exists in a group of vehicles, it may order a recall and remedy campaign.

However, NHTSA cannot become involved in individual problems between you, your retailer, or Volvo Cars of North America, LLC. To contact NHTSA, you may either call the Auto Safety Hotline toll-free at 1-888-327-4236

(TTY: 1-800-424-9153) or write to: NHTSA, U.S. Department of Transportation, Washington D.C. 20590.

You can also obtain other information about motor vehicle safety from:

http://www.safercar.gov

Volvo strongly recommends that if your vehicle is covered under a service campaign, safety or emission recall or similar action, it should be completed as soon as possible. Please check with your local retailer or Volvo Cars of North America, LLC if your vehicle is covered under these conditions.

NHTSA can be reached at:

Internet:

http://www.nhtsa.gov

Telephone:

1-888-DASH-2-DOT
(1-888-327-4236).

Reporting safety defects in Canada

If you believe your vehicle has a defect that could cause a crash or could cause injury or death, you should immediately inform Transport Canada in addition to notifying Volvo Cars of Canada Corp.

To contact Transport Canada, call (800) 333-0510, or (613) 993-9851 if you are calling from the Ottawa region.

Seat belts

Using seat belts

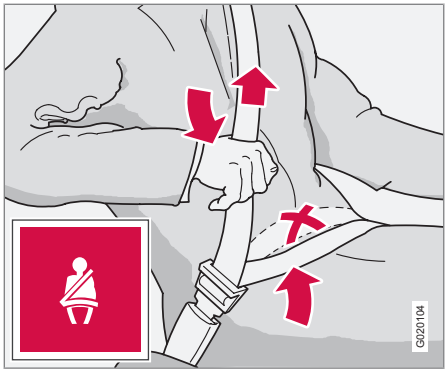

Adjusting the seat belt

Seat belts should always be worn by all occupants of your vehicle. Children should be properly restrained, using an infant, car, or booster seat determined by age, weight and height.

Volvo also believes no child should sit in the front seat of a vehicle.

Most states and provinces make it mandatory for occupants of a vehicle to use seat belts.

Seat belt pretensioners

All seat belts are equipped with pretensioners that reduce slack in the belts. These pretensioners are triggered in situations where the front or side impact airbags deploy, and in certain impacts from the rear. The front seat belts also include a tension reducing device which, in the event of a collision, limits the peak forces exerted by the seat belt on the occupant.

Buckling a seat belt

Pull the belt out far enough to insert the latch plate into the receptacle until a distinct click is heard. The seat belt retractor is normally "unlocked" and you can move freely, provided that the shoulder belt is not pulled out too far.

NOTE

The seat belt is easiest to reach by grasping it near the lower seat belt guide, not over the shoulder.

The retractor will lock up as follows:

- if the belt is pulled out rapidly
- during braking and acceleration
- if the vehicle is leaning excessively
- when driving in turns

When wearing the seat belt remember:

- The belt should not be twisted or turned.
- The lap section of the belt must be positioned low on the hips (not pressing against the abdomen).
- Make sure that the shoulder belt is rolled up into its retractor and that the shoulder and lap belts are taut.

Unbuckling the seat belt

- To remove the seat belt, press the red section on the seat belt receptacle. Before exiting the vehicle, check that the seat belt retracts fully after being unbuckled. If necessary, guide the belt back into the retractor slot.

WARNING

Never use a seat belt for more than one occupant. Never wear the shoulder portion of the belt under the arm, behind the back or otherwise out of position. Such use could cause injury in the event of an accident. As seat belts lose much of their strength when exposed to violent stretching, they should be replaced after any collision, even if they appear to be undamaged.

WARNING

- Never repair the belt yourself; have this work done by a trained and qualified Volvo service technician only.
- Any device used to induce slack into the shoulder belt portion of the three-point belt system will have a detrimental effect on the amount of protection available to you in the event of a collision.
- The seat back should not be tilted too far back. The shoulder belt must be taut in order to function properly.
- Do not use child safety seats or child booster cushions/backrests in the front passenger's seat. We also recommend that children who have outgrown these devices sit in the rear seat with the seat belt properly fastened.

Seat belt guides

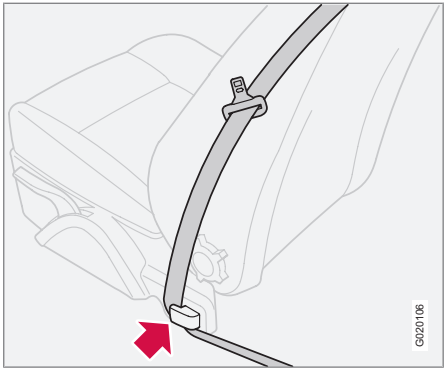

Seat belt guides (on both front seats)

These guides are designed to help provide easier access to the seat belts. A belt can be taken out of the guide and slid to the rearmost part of the lower seat belt anchorage rod to make it easier for passengers to enter or exit the rear seat.

Seat belt use during pregnancy

The seat belt should always be worn during pregnancy. But it is crucial that it be worn in the correct way. The diagonal section should wrap over the shoulder then be routed between the breasts and to the side of the belly. The lap section should lay flat over the thighs and as low as possible under the belly. It must never be allowed to ride upward. Remove all slack from the belt and insure that it fits close to the body without any twists.

As a pregnancy progresses, pregnant drivers should adjust their seats and steering wheel such that they can easily maintain control of the vehicle as they drive (which means they must be able to easily operate the foot pedals and

Seat belts

steering wheel). Within this context, they should strive to position the seat with as large a distance as possible between their belly and the steering wheel.

Child seats

Please refer to page 35 for information on securing child seats with the seat belts.

Seat belt reminder

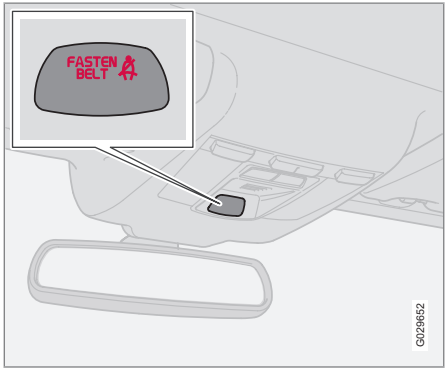

Seat belt reminder light in ceiling console

The seat belt reminder consists of an audible signal, an indicator light near the rearview mirror and a symbol in the instrument panel that alert all occupants of the vehicle to fasten their seat belts. The audible signal and warning light will be on for a total of 6 seconds from the time the ignition is switched on, **regardless of whether or not** the seat belts are fastened.

If the front seat belts are unbuckled while the vehicle is in motion, the audible signal and warning light will be active for a total of 6 seconds.

Rear seats

The seat belt reminder in the rear seat has two additional functions:

- It provides information about which seat belts are fastened in the rear seat. A message will appear in the information display when a belt is being used. This message will disappear after approximately 6 seconds or can be erased by pressing the **READ** button on the left steering wheel lever.
- It also provides a reminder if one of the occupants of the rear seat has unbuckled his/her seat belt while the vehicle is in motion. A visual and audible signal will be given. These signals will stop when the seat belt has been re-buckled or can be stopped by pressing the **READ** button.

The message in the information display can always be accessed, even if it has been erased, by pressing the **READ** button to display stored messages.

Seat belt maintenance

Check periodically that the seat belts are in good condition. Use water and a mild detergent for cleaning. Check seat belt mechanism function as follows: attach the seat belt and pull rapidly on the strap.

Supplemental Restraint System (SRS)

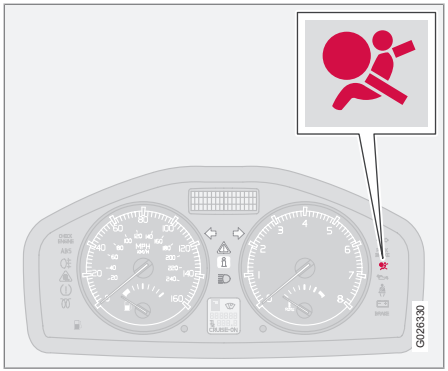

SRS warning light

As an enhancement to the three-point seat belts, your Volvo is equipped with a Supplemental Restraint System (SRS). Volvo's SRS consists of seat belt pretensioners, front airbags, side impact airbags, the occupant weight sensor, and door-mounted inflatable curtains. All of these systems are monitored by the SRS control module. An SRS warning light in the instrument panel (see the illustration) illuminates when the ignition key is turned to position **I**, **II**, or **III**, and will normally go out after approximately 7 seconds if no faults are detected in the system.

Where applicable, a text message will also be displayed when the SRS warning light illuminates. If this warning symbol is not functioning properly, the general warning symbol illuminates and either **SRS AIRBAG SERVICE URGENT** or **SRS AIRBAG SERVICE REQUIRED** will be displayed.

WARNING

- If the SRS warning light stays on after the engine has started or if it illuminates while you are driving, have the vehicle inspected by a trained and qualified Volvo service technician as soon as possible.
- Never try to repair any component or part of the SRS yourself. Any interference in the system could cause malfunction and serious injury. All work on these systems should be performed by a trained and qualified Volvo service technician.

WARNING

If your vehicle has been subjected to flood conditions (e.g. soaked carpeting/standing water on the floor of the vehicle) or if your vehicle has become flood-damaged in any way, do not attempt to start the vehicle or put the key in the ignition before disconnecting the battery (see below). This may cause airbag deployment which could result in personal injury. Have the vehicle towed to a trained and qualified Volvo service technician for repairs.

Automatic transmission

Before attempting to tow the vehicle, use the following procedure to override the shiftlock system to move the gear selector to the neutral position:

1. Switch off the ignition for at least 10 minutes and disconnect the battery.
2. Wait at least one minute.
3. Insert the key in the ignition and turn it to position **II**.
4. Press firmly on the brake pedal.
5. Move the gear selector from Park (**P**) to the Neutral (**N**) position, see page 149, for information on manually overriding the shiftlock system.

Supplemental Restraint System

The front airbag system

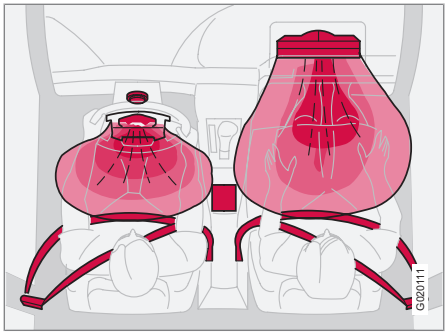

The front airbags supplement the three-point seat belts. For these airbags to provide the protection intended, seat belts must be worn at all times.

The front airbag system includes gas generators surrounded by the airbags, and deceleration sensors that activate the gas generators, causing the airbags to be inflated with nitrogen gas.

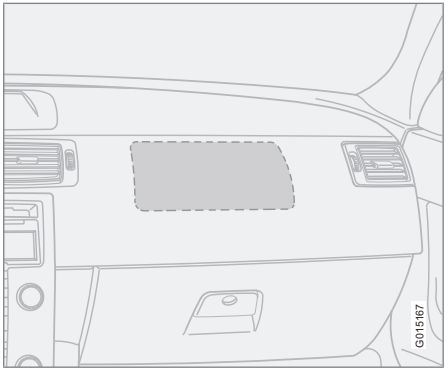

Location of the passenger's side front airbag

As the movement of the seats' occupants compresses the airbags, some of the gas is expelled at a controlled rate to provide better cushioning. Both seat belt pretensioners also deploy, minimizing seat belt slack. The entire process, including inflation and deflation of the airbags, takes approximately one fifth of a second.

The location of the front airbags is indicated by **SRS AIRBAG** embossed on the steering wheel pad and above the glove compartment, and by decals on both sun visors and on the front and far right side of the dash.

- The driver's side front airbag is folded and located in the steering wheel hub.
- The passenger's side front airbag is folded behind a panel located above the glove compartment.

WARNING

- The airbags in the vehicle are designed to be a SUPPLEMENT to-not a replacement for-the three-point seat belts. For maximum protection, wear seat belts at all times. Be aware that no system can prevent all possible injuries that may occur in an accident.
- Never drive a vehicle with a steering wheel-mounted airbag with your hands on the steering wheel pad/airbag housing.
- The front airbags are designed to help prevent serious injury. Deployment occurs very quickly and with considerable force. During normal deployment and depending on variables such as seating position, one may experience abrasions, bruises, swellings, or other injuries as a result from deployment of one or both of the airbags.
- When installing any accessory equipment, make sure that the front airbag system is not damaged. Any interference in the system could cause malfunction.

Front airbag deployment

- The front airbags are designed to deploy during certain frontal or front-angular collisions, impacts, or decelerations, depending on the crash severity, angle, speed and object impacted. The airbags may also deploy in certain non-frontal collisions where rapid deceleration occurs.
- The SRS sensors, which trigger the front airbags, are designed to react to both the impact of the collision and the inertial forces generated by it, and to determine if the intensity of the collision is sufficient for the seat belt pretensioners and/or airbags to be deployed.

However, not all frontal collisions activate the front airbags.

- If the collision involves a nonrigid object (e.g., a snow drift or bush), or a rigid, fixed object at a low speed, the front airbags will not necessarily deploy.
- Front airbags do not normally deploy in a side impact collision, in a collision from the rear or in a rollover situation.
- The amount of damage to the bodywork does not reliably indicate if the airbags should have deployed or not.

NOTE

- Deployment of front airbags occurs only one time during an accident. In a collision where deployment occurs, the airbags and seat belt pretensioners activate. Some noise occurs and a small amount of powder is released. The release of the powder may appear as smoke-like matter. This is a normal characteristic and does not indicate fire.
- Volvo's front airbags use special sensors that are integrated with the front seat buckles. The point at which the airbag deploys is determined by whether or not the seat belt is being used, as well as the severity of the collision.
- Collisions can occur where only one of the airbags deploys. If the impact is less severe, but severe enough to present a clear injury risk, the airbags are triggered at partial capacity. If the impact is more severe, the airbags are triggered at full capacity.

Should you have questions about any component in the SRS system, please contact a trained and qualified Volvo service technician or Volvo Customer Support:

In the USA

Volvo Cars of North America, LLC

Supplemental Restraint System

Customer Care Center

1 Volvo Drive

P.O. Box 914

Rockleigh, New Jersey 07647

1-800-458-1552

www.volvocars.us

In Canada

Volvo Cars of Canada Corp.

National Customer Service

175 Gordon Baker Road

North York, Ontario M2H 2N7

1-800-663-8255

www.volvocanada.com

WARNING

- Do not use child safety seats or child booster cushions/backrests in the front passenger's seat. We also recommend that occupants under 4 feet 7 inches (140 cm) in height who have outgrown these devices sit in the rear seat with the seat belt fastened[1].
- Never drive with the airbags deployed. The fact that they hang out can impair the steering of your vehicle. Other safety systems can also be damaged.
- The smoke and dust formed when the airbags are deployed can cause skin and eye irritation in the event of prolonged exposure.

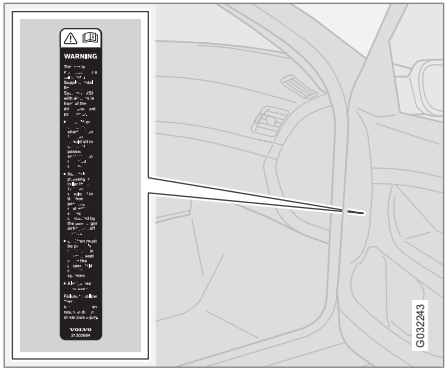

Airbag decal in the front passenger's door opening

[1] See also the Occupant Weight Sensor information on page 26.

Airbag decal on passenger's side dashboard

Airbag decal on the outside of both sun visors

WARNING

- Children must never be allowed in the front passenger's seat. Volvo recommends that ALL occupants (adults and children) shorter than 4 feet 7 inches (140 cm) be seated in the back seat of any vehicle with a passenger-side front airbag. See page 34 for guidelines.
- Occupants in the front passenger's seat must never sit on the edge of the seat, sit leaning toward the instrument panel or otherwise sit out of position.
- The occupant's back must be as upright as comfort allows and be against the seat back with the seat belt properly fastened.
- Feet must be on the floor, e.g., not on the dash, seat or out of the window.

WARNING

- No objects or accessory equipment, e.g. dashboard covers, may be placed on, attached to, or installed near the air bag hatch (the area above the glove compartment) or the area affected by airbag deployment.
- There should be no loose articles, e.g. coffee cups, on the floor, seat, or dashboard area.
- Never try to open the airbag cover on the steering wheel or the passenger's side dashboard. This should only be done by a trained and qualified Volvo service technician.
- Failure to follow these instructions can result in injury to the vehicle occupants.

Occupant Weight Sensor (OWS)

Disabling the passenger's side front airbag

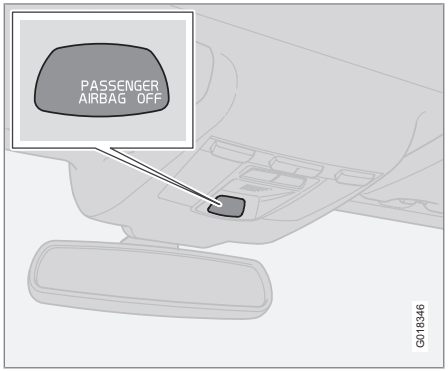

Occupant Weight Sensor (OWS) indicator light

Volvo recommends that ALL occupants (adults and children) shorter than 4 feet 7 inches (140 cm) be seated in the rear seat of any vehicle with a passenger's side front airbag, and be properly restrained. Children should always be seated in child restraints appropriate for their size and weight. See also the child safety recommendations on page 33.

The Occupant Weight Sensor (OWS) is designed to meet the regulatory requirements of Federal Motor Vehicle Safety Standard (FMVSS) 208 and is designed to disable (will not inflate) the passenger's side front airbag under certain conditions.

The OWS works with sensors that are part of the front passenger's seat and seat belt. The sensors are designed to detect the presence of a properly seated occupant and determine if the passenger's side front airbag should be enabled (may inflate) or disabled (will not inflate).

The OWS will disable (will not inflate) the passenger's side front airbag when:

- the front passenger's seat is unoccupied, or has small/medium objects in the front seat,
- the system determines that an infant is present in a rear-facing infant seat that is installed according to the manufacturer's instructions,
- the system determines that a small child is present in a forward-facing child restraint that is installed according to the manufacturer's instructions,
- the system determines that a small child is present in a booster seat,
- a front passenger takes his/her weight off of the seat for a period of time,
- a child or a small person occupies the front passenger's seat.

The OWS uses a **PASSENGER AIRBAG OFF** indicator lamp which will illuminate and stay on to remind you that the passenger's side front airbag is disabled. The **PASSENGER AIRBAG OFF** indicator lamp is located in the overhead console, near the base of the rearview mirror.

NOTE

When the ignition is switched on, the OWS indicator light will go on for up to 10 seconds while the system performs a self-diagnostic test.

However, if a fault is detected in the system:

- The OWS indicator light will stay on
- The SRS warning light (see page 21) will come on and stay on

The message **PASS. AIRBAG OFF SERVICE URGENT** will be displayed in the information display.

Occupant Weight Sensor (OWS)

WARNING

If a fault in the system is detected and indicated as explained on the preceding page, be aware that the passenger's side front airbag will not deploy in the event of a collision. In this case, the SRS system and Occupant Weight Sensor should be inspected by a trained and qualified Volvo service technician as soon as possible.

WARNING

- Never try to open, remove, or repair any components in the OWS system. This could result in system malfunction. Maintenance or repairs should only be carried out by an a trained and qualified Volvo service technician.
- The front passenger's seat should not be modified in any way. This could reduce pressure on the seat cushion, which might interfere with the OWS system's function.

The OWS is designed to disable (will not inflate) the passenger's side front airbag when a rear facing infant seat, a forward-facing child restraint, or a booster seat is detected. The **PASSENGER AIRBAG OFF** indicator lamp will illuminate and stay on to remind you that the passenger's side front airbag is disabled (see the following table).

Passenger's seat occupancy status	OWS indicator light status	Passenger's side front airbag status
Seat unoccupied	OWS indicator light PASS AIRBAG OFF lights up	Passenger's side front airbag disabled
Seat occupied by low weight occupant/object[A]	OWS indicator light PASS AIRBAG OFF lights up	Passenger's side front airbag disabled
Seat occupied by heavy occupant/object	OWS indicator light PASS AIRBAG OFF is not lit	Passenger's side front airbag enabled

[A] Volvo recommends that children always be properly restrained in appropriate child restraints in the rear seats. Do not assume that the passenger's side front airbag is disabled unless the PASSENGER AIRBAG OFF indicator lamp is lit. Make sure the child restraint is properly installed. If there is any doubt as to the status of the passenger's side front airbag, move the child restraint to the rear seat.

The OWS is designed to enable (may inflate) the passenger's side front airbag anytime the system senses that a person of adult size is sitting properly in the front passenger's seat. The **PASSENGER AIRBAG OFF** indicator lamp will be off and remain off.

If a person of adult size is sitting in the front passenger's seat, but the **PASSENGER AIRBAG OFF** indicator lamp is on, it is possible that the person isn't sitting properly in the seat. If this happens:

1. Turn the vehicle off and ask the person to place the seatback in an upright position.
2. Have the person sit upright in the seat, centered on the seat cushion, with the person's legs comfortably extended.
3. Restart the vehicle and have the person remain in this position for about two minutes. This will allow the system to detect that person and enable the passenger's frontal airbag.
4. If the **PASSENGER AIRBAG OFF** indicator lamp remains on even after this, the person should be advised to ride in the rear seat.

This condition reflects limitations of the OWS classification capability. It does not indicate OWS malfunction.

Modifications

If you are considering modifying your vehicle in any way to accommodate a disability, for example by altering or adapting the driver's or

Occupant Weight Sensor (OWS)

front passenger's seat(s) and/or airbag systems, please contact Volvo at:

In the USA

Volvo Cars of North America, LLC

Customer Care Center

1 Volvo Drive

P.O. Box 914

Rockleigh, New Jersey 07647

1-800-458-1552

In Canada

Volvo Cars of Canada Corp.

National Customer Service

175 Gordon Baker Road North York, Ontario M2H 2N7

1-800-663-8255

WARNING

- No objects that add to the total weight on the seat should be placed on the front passenger's seat. If a child is seated in the front passenger's seat with any additional weight, this extra weight could cause the OWS system to enable the airbag, which might cause it to deploy in the event of a collision, thereby injuring the child.
- The seat belt should never be wrapped around an object on the front passenger's seat. This could interfere with the OWS system's function.
- The front passenger's seat belt should never be used in a way that exerts more pressure on the passenger than normal. This could increase the pressure exerted on the weight sensor by a child, and could result in the airbag being enabled, which might cause it to deploy in the event of a collision, thereby injuring the child.

WARNING

Keep the following points in mind with respect to the OWS system. Failure to follow these instructions could adversely affect the system's function and result in serious injury to the occupant of the front passenger's seat:

- The full weight of the front seat passenger should always be on the seat cushion. The passenger should never lift him/herself off the seat cushion using the armrest in the door or the center console, by pressing the feet on the floor, by sitting on the edge of the seat cushion, or by pressing against the backrest in a way that reduces pressure on the seat cushion. This could cause OWS to disable the passenger's side front airbag.
- Do not place any type of object on the front passenger's seat in such a way that jamming, pressing, or squeezing occurs between the object and the front seat, other than as a direct result of the correct use of the Automatic Locking Retractor/Emergency Locking Retractor (ALR/ELR) seat belt, see page 34.
- No objects should be placed under the front passenger's seat. This could interfere with the OWS system's function.

Side impact airbags – front seats only

Location of the side impact (SIPS) airbag

As an enhancement to the structural side impact protection built into your car, the car is also equipped with Side Impact Protection System (SIPS) airbags.

The SIPS airbag system is designed to help increase occupant protection in the event of certain side impact collisions. The SIPS airbags are designed to deploy only during certain side-impact collisions, depending on the crash severity, angle, speed and point of impact.

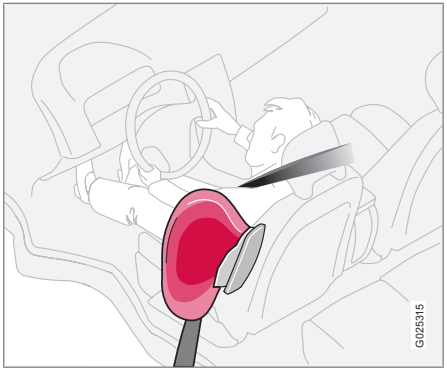

SIPS airbag deployment

NOTE

SIPS airbag deployment (one airbag) occurs only on the side of the vehicle affected by the impact. The airbags are not designed to deploy in all side impact situations.

Components in the SIPS airbag system

This SIPS airbag system consists of gas generators and side airbag modules built into the outboard sides of both front seat backrests.

WARNING

- The SIPS airbag system is a supplement to the structural Side Impact Protection System and the three-point seat belt system. It is not designed to deploy during collisions from the front or rear of the car or in rollover situations.
- The use of seat covers on the front seats may impede SIPS airbag deployment.
- No objects, accessory equipment or stickers may be placed on, attached to or installed near the SIPS airbag system or in the area affected by SIPS airbag deployment.
- Never try to open or repair any components of the SIPS airbag system. This should be done only by a trained and qualified Volvo service technician.
- In order for the SIPS airbag to provide its best protection, both front seat occupants should sit in an upright position with the seat belt properly fastened.
- Failure to follow these instructions can result in injury to the occupants of the vehicle in the event of an accident.

Door Mounted Inflatable Curtain system (DMIC)

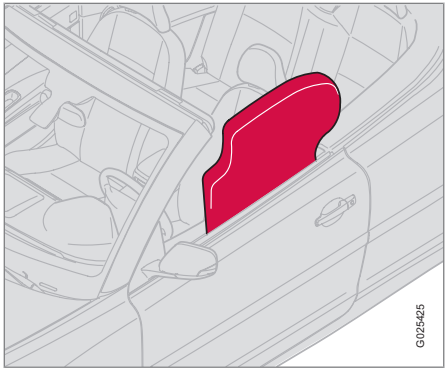

The DMIC is a supplement to the structural side impact protection. These inflatable curtains are concealed in the upper section of both doors.

- The Inflatable Curtain (DMIC) and the Side Impact Airbag System (SIPS airbag) will both deploy in certain side impacts.
- DMIC deployment can occur regardless of whether the power retractable hard top is up or down.
- If the inflatable curtain deploys, it remains inflated for approximately 5 seconds.

WARNING

- The DMIC system is a supplement to the Side Impact Protection System. It is not designed to deploy during collisions from the front or rear of the vehicle. It only provides protection for the occupants of the front seats.
- There is a risk of injury if the driver or front seat passenger leans on or against the door panel when the DMIC deploys.
- Never install or mount any equipment on the insides of the doors, door pillars, or side panels. This could impede the function of the DMIC system.
- Never try to open or repair any components of the DMIC system. This should be done only by a trained and qualified Volvo service technician.

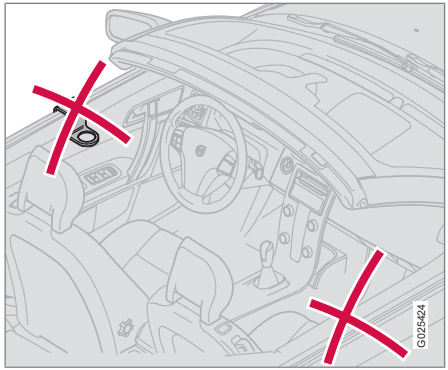

WARNING

In order for the DMIC to provide its best protection, both front seat occupants should sit in an upright position with the seat belt properly fastened; adults using the seat belt and children using the proper child restraint system. Only adults should sit in the front seats. Children must never be allowed in the front passenger seat. See page 34 for guidelines. Failure to follow these instructions can result in injury to the vehicle occupants in an accident.

Introduction

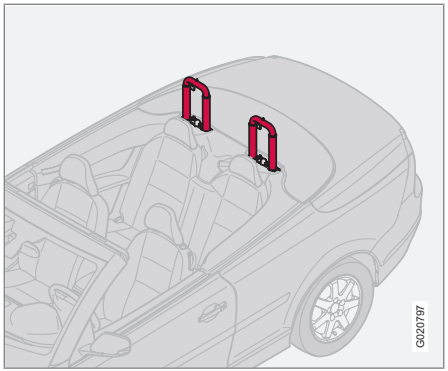

Deployed ROPS roll bars

The ROPS system consists of two roll bars located behind the rear seat head restraints, and a sensor that monitors the roll or pitch angle of the vehicle.

If the vehicle rolls or pitches beyond a preset angle, or in the event of a rear-end collision of sufficient force, the roll bars are automatically deployed (raised).

The ROPS system is designed to function regardless of whether the power retractable hard top is up or down. By design, the tops of the roll bars are equipped with a point in order to pierce the rear window if the top is up.

NOTE

If ROPS has deployed, the system should be inspected by a trained and qualified Volvo service technician.

WARNING

- The rear seat of the Volvo C70 is intended for two occupants, and only two rear seat belts are provided. The center section of the seat should never be used to seat a passenger.
- No objects should be placed over the roll bars or behind the rear seat head restraints.
- All repairs or maintenance to the ROPS system should only be performed by a trained and qualified Volvo service technician.

Crash mode

Driving after a collision

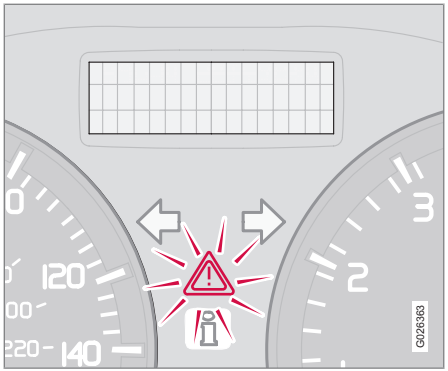

If the vehicle has been involved in a collision, the text **CRASH MODE SEE MANUAL** may appear in the information display. This indicates that the vehicle's functionality has been reduced.

This text can only be shown if the display is undamaged and the vehicle's electrical system is intact.

CRASH MODE is a feature that is triggered if one or more of the safety systems (for example, front or side airbags, an inflatable curtain, or one or more of the seat belt pretensioners) has deployed. The collision may have damaged an important function in the vehicle, such as the fuel lines, sensors for one of the safety systems, the brake system, etc.

WARNING

- Never attempt to repair the vehicle yourself or to reset the electrical system after the vehicle has displayed **CRASH MODE SEE MANUAL**. This could result in injury or improper system function.
- Restoring the vehicle to normal operating mode should only be done by a trained and qualified Volvo service technician.
- After **CRASH MODE SEE MANUAL** has been displayed, if you detect the odor of fuel vapor, or see any signs of fuel leakage, do not attempt to start the vehicle. Leave the vehicle immediately.

Attempting to start the vehicle

If damage to the vehicle is minor and there is no fuel leakage, you may attempt to start the vehicle. To do so:

1. Remove the ignition key or optional keyless drive start control, see page 145.
2. Reinsert the key or start control in the ignition switch. The vehicle will then attempt to reset CRASH MODE to normal mode.
3. Try to start the vehicle.

Moving the vehicle

If the electrical system is able to reset system status to normal (**CRASH MODE SEE MANUAL** will no longer be displayed), the vehicle may be moved carefully from its present position, if for example, it is blocking traffic. It should, however, not be moved farther than is absolutely necessary.

WARNING

Even if the vehicle appears to be drivable after CRASH MODE has been set, it should not be driven or towed (pulled by another vehicle). There may be concealed damage that could make it difficult or impossible to control. The vehicle should be transported on a flatbed tow truck to a trained and qualified Volvo service technician for inspection/repairs.

Children should be seated safely

Volvo recommends the proper use of restraint systems for all occupants including children. Remember that, regardless of age and size, a child should always be properly restrained in a car.

Your car is also equipped with ISOFIX/LATCH attachments, which make it more convenient to install child seats.

Some restraint systems for children are designed to be secured in the vehicle by lap belts or the lap portion of a lap-shoulder belt. Such child restraint systems can help protect children in cars in the event of an accident only if they are used properly. However, children could be endangered in a crash if the child restraints are not properly secured in the vehicle. Failure to follow the installation instructions for your child restraint can result in your child striking the vehicle's interior in a sudden stop.

Holding a child in your arms is NOT a suitable substitute for a child restraint system. In an accident, a child held in a person's arms can be crushed between the vehicle's interior and an unrestrained person. The child could also be injured by striking the interior, or by being ejected from the vehicle during a sudden maneuver or impact. The same can also happen if the infant or child rides unrestrained on the seat. Other occupants should also be properly restrained to help reduce the chance of injuring or increasing the injury of a child.

All states and provinces have legislation governing how and where children should be carried in a car. Find out the regulations existing in your state or province. Recent accident statistics have shown that children are safer in rear seating positions than front seating positions when properly restrained. A child restraint system can help protect a child in a vehicle. Here's what to look for when selecting a child restraint system:

- It should have a label certifying that it meets applicable Federal Motor Vehicle Safety Standards (FMVSS 213) – or in Canada, CMVSS 213.
- Make sure the child restraint system is approved for the child's height, weight and development – the label required by the standard or regulation, or instructions for infant restraints, typically provide this information.
- In using any child restraint system, we urge you to carefully look over the instructions that are provided with the restraint. Be sure you understand them and can use the device properly and safely in this vehicle. A misused child restraint system can result in increased injuries for both the infant or child and other occupants in the vehicle.

When a child has outgrown the child safety seat, you should use the rear seat with the standard seat belt fastened. The best way to help protect the child here is to place the child on a cushion so that the seat belt is properly located on the hips (see the illustration on page 41). Legislation in your state or province may mandate the use of a child seat or cushion in combination with the seat belt, depending on the child's age and/or size. Please check local regulations.

A specially designed and tested booster cushion can be obtained from your Volvo retailer.

USA: for children weighing 33–80 lbs. (15–36 kg) and 38–54 inches (97–137 cm) in height

Canada: for children weighing 40–80 lbs. (18–36 kg) and 40–54 inches (102–137 cm) in height

WARNING

Do not use child safety seats or child booster cushions/backrests in the front passenger's seat. We also recommend that children under 4 feet 7 inches (140 cm) in height who have outgrown these devices sit in the rear seat with the seat belt fastened.

Child safety

Automatic Locking Retractor/ Emergency Locking Retractor (ALR/ ELR)

To make child seat installation easier, each seat belt (except for the driver's belt) is equipped with a locking mechanism to help keep the seat belt taut.

When attaching the seat belt to a child seat:

1. Attach the seat belt to the child seat according to the child seat manufacturer's instructions.
2. Pull the seat belt out as far as possible.
3. Insert the seat belt latch plate into the buckle (lock) in the usual way.
4. Release the seat belt and pull it taut around the child seat.

A sound from the seat belt retractor will be audible at this time and is normal. The belt will now be locked in place. This function is automatically disabled when the seat belt is unlocked and the belt is fully retracted.

WARNING

Do not use child safety seats or child booster cushions/backrests in the front passenger's seat. We also recommend that children who have outgrown these devices sit in the rear seat with the seat belt properly fastened.

Volvo's recommendations

Why does Volvo believe that no child should sit in the front seat of a car? It's quite simple really. A front airbag is a very powerful device designed, by law, to help protect an adult.

Because of the size of the airbag and its speed of inflation, a child should never be placed in the front seat, even if he or she is properly belted or strapped into a child safety seat. Volvo has been an innovator in safety for over seventy-five years, and we'll continue to do our part. But we need your help. Please remember to put your children in the back seat, and buckle them up.

Volvo has some very specific recommendations:

- Always wear your seat belt.
- Airbags are a SUPPLEMENTAL safety device which, when used with a three-point seat belt can help reduce serious injuries during certain types of accidents. Volvo recommends that you do not disconnect the airbag system in your vehicle.
- Volvo strongly recommends that everyone in the vehicle be properly restrained.
- Volvo recommends that ALL occupants (adults and children) shorter than 4 feet 7 inches (140 cm) be seated in the back seat of any vehicle with a front passenger side airbag.
- Drive safely!

Child restraints

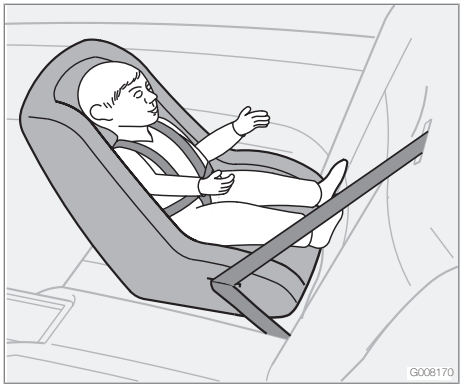

Infant seat

There are three main types of child restraint systems: infant seats, convertible seats, and booster cushions. They are classified according to the child's age and size.

The following section provides **general information** on securing a child restraint using a three-point seat belt. Refer to page 42 for information on securing a child restraint using ISOFIX lower anchors.

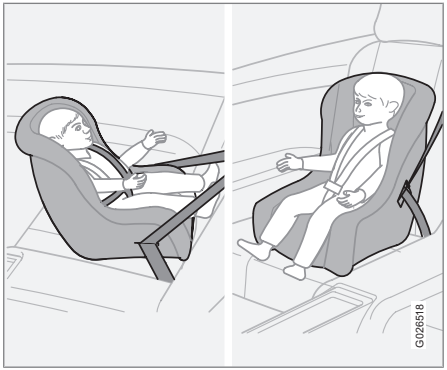

Convertible seat

WARNING

A child seat should never be used in the front passenger seat of any vehicle with a front passenger airbag – not even if the **Passenger airbag off** symbol near the rear-view mirror is illuminated (on vehicles equipped with Occupant Weight Sensor). If the severity of an accident were to cause the airbag to inflate, this could lead to serious injury or death to a child seated in this position.

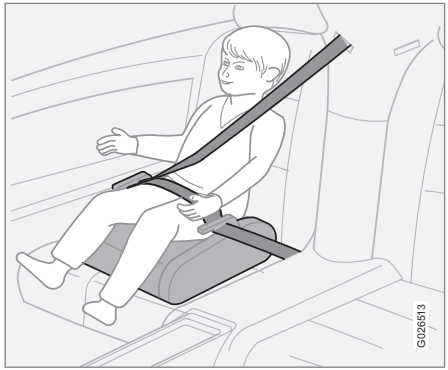

Booster cushion

WARNING

Always refer to the child restraint manufacturer's instructions for detailed information on securing the restraint.

Child restraint systems

WARNING

- When not in use, keep the child restraint system secured or remove it from the passenger compartment to help prevent it from injuring passengers in the event of a sudden stop or collision.
- A small child's head represents a considerable part of its total weight and its neck is still very weak. Volvo recommends that children up to age 4 travel, properly restrained, facing rearward. In addition, Volvo recommends that children should ride rearward facing, properly restrained, as long as possible.
- The following text is mandated by Canadian legislation: The Volvo C70 is not equipped with top tether anchors. Child restraints or booster cushions requiring anchors of this kind cannot be properly fastened and should not be used in this vehicle.

Securing an infant seat with a seat belt

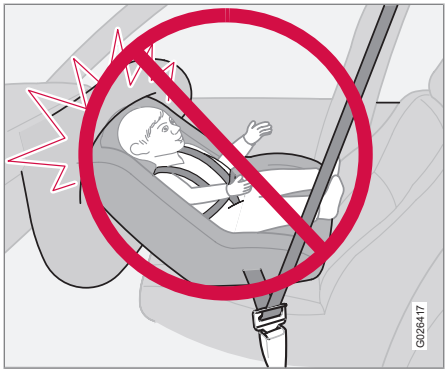

Do not place the infant seat in the front passenger's seat

NOTE

Refer to page 42 for information on securing a child restraint using ISOFIX lower anchors.

WARNING

- An infant seat must be in the rear-facing position only.
- The infant seat should not be positioned behind the driver's seat unless there is adequate space for safe installation.

1. Place the infant seat in the rear seat of the vehicle.

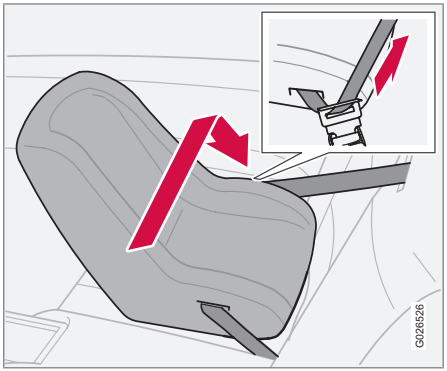

Positioning the seat belt through the infant seat

2. Attach the seat belt to the infant seat according to the manufacturer's instructions.

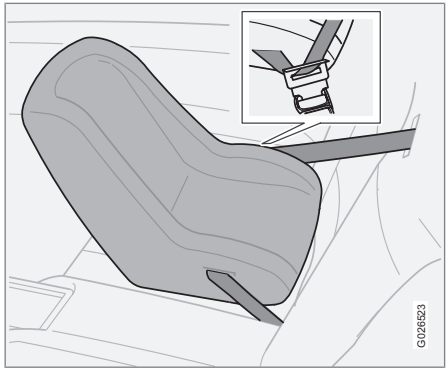

Fasten the seat belt

WARNING

A child seat should never be used in the front passenger seat of any vehicle with a front passenger airbag – not even if the "Passenger airbag off" symbol near the rear-view mirror is illuminated (on vehicles equipped with Occupant Weight Sensor). If the severity of an accident were to cause the airbag to inflate, this could lead to serious injury or death to a child seated in this position.

3. Fasten the seat belt by inserting the latch plate into the buckle (lock) until a distinct click is audible.

Infant seats

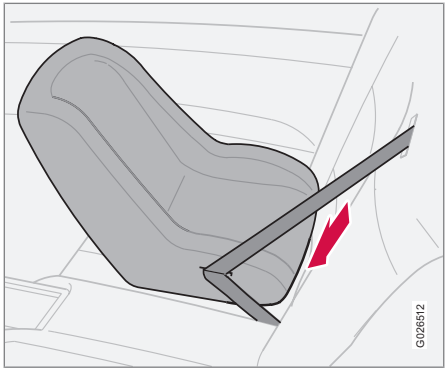

Pull out the shoulder section of the seat belt

4. Pull the shoulder section of the seat belt out as far as possible to activate the belt's automatic locking function.

NOTE

The locking retractor will automatically release when the seat belt is unbuckled and allowed to retract fully.

5. Press the infant seat firmly in place, let the seat belt retract and pull it taut. A sound from the seat belt retractor's automatic locking function will be audible at this time and is normal. The seat belt should now be locked in place.

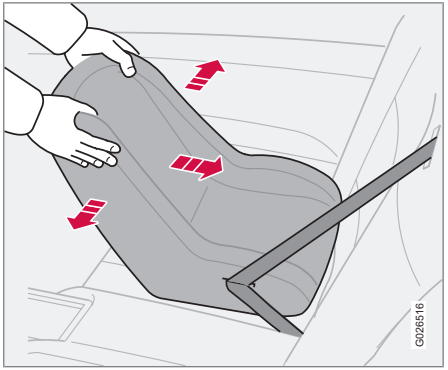

Ensure that the seat is securely in place

WARNING

It should not be possible to move the child restraint more than 1 in. (2.5 cm) in any direction.

6. Push and pull the infant seat to ensure that it is held securely in place by the seat belt.
7. The infant seat can be removed by unbuckling the seat belt and letting it retract completely.

Securing a convertible seat with a seat belt

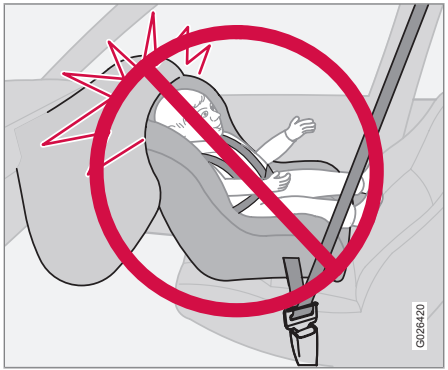

Do not place the convertible seat in the front passenger's seat

NOTE

Refer to page 42 for information on securing a child restraint using ISOFIX lower anchors.

Convertible seats can be used in either a forward or rearward-facing position, depending on the age and size of the child.

WARNING

Always use a convertible seat that is suitable for the child's age and size. See the convertible seat manufacturer's recommendations.

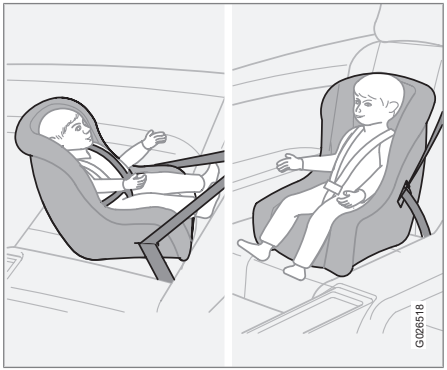

Route the seat belt through the convertible seat

WARNING

A small child's head represents a considerable part of its total weight and its neck is still very weak. Volvo recommends that children up to age 4 travel, properly restrained, facing rearward. In addition, Volvo recommends that children should ride rearward facing, properly restrained, as long as possible.

WARNING

- Convertible child seats should be installed in the rear seat only.
- A rear-facing convertible seat should not be positioned behind the driver's seat unless there is adequate space for safe installation.

1. Place the convertible seat in the rear seat of the vehicle.

Convertible seats

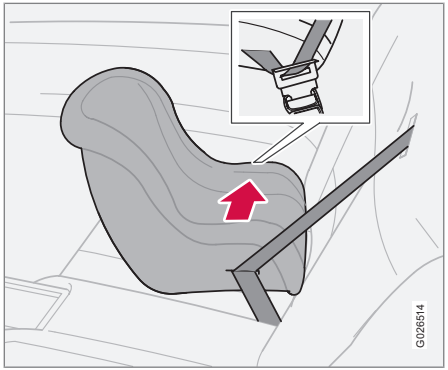

Fasten the seat belt

2. Attach the seat belt to the convertible seat according to the manufacturer's instructions.
3. Fasten the seat belt by inserting the latch plate into the buckle (lock) until a distinct click is audible.
4. Pull the shoulder section of the seat belt out as far as possible to activate the belt's automatic locking function.

NOTE

The locking retractor will automatically release when the seat belt is unbuckled and allowed to retract fully.

5. Press the convertible seat firmly in place, let the seat belt retract and pull it taut. A sound from the seat belt retractor's automatic locking function will be audible at this time and is normal. The seat belt should now be locked in place.

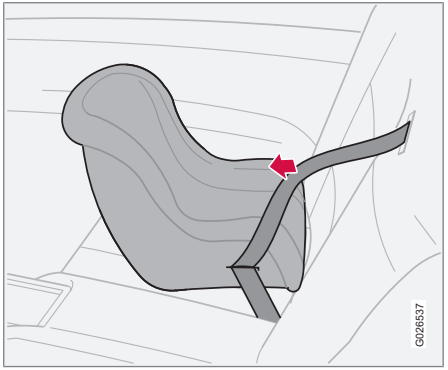

Pull out the shoulder section of the seat belt

6. Push and pull the convertible seat to ensure that it is held securely in place by the seat belt.

WARNING

It should not be possible to move the child restraint more than 1 in. (2.5 cm) in any direction.

The convertible seat can be removed by unbuckling the seat belt and letting it retract completely.

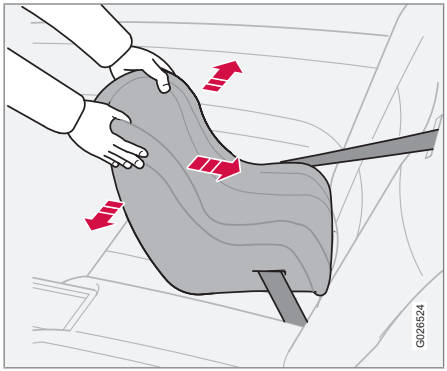

Ensure that the seat is securely in place

Securing a booster cushion

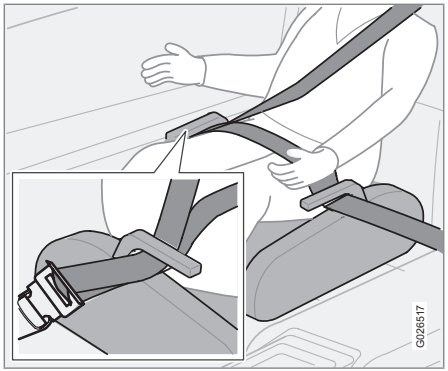

Position the child correctly on the booster cushion and fasten the seat belt

WARNING

A child seat should never be used in the front passenger seat of any vehicle with a front passenger airbag – not even if the **Passenger airbag off** symbol near the rear-view mirror is illuminated (on vehicles equipped with Occupant Weight Sensor). If the severity of an accident were to cause the airbag to inflate, this could lead to serious injury or death to a child seated in this position.

Booster cushions are recommended for children who have outgrown convertible seats.

1. Place the booster cushion in the rear seat of the vehicle.
2. With the child properly seated on the booster cushion, attach the seat belt to or around the cushion according to the manufacturer's instructions.
3. Fasten the seat belt by inserting the latch plate into the buckle (lock) until a distinct click is audible.
4. Ensure that the seat belt is pulled taut and fits snugly around the child.

WARNING

- The hip section of the three-point seat belt must fit snugly across the child's hips, not across the stomach.
- The shoulder section of the three-point seat belt should be positioned across the chest and shoulder.
- The shoulder belt must never be placed behind the child's back or under the arm.

ISOFIX lower anchors

Using the ISOFIX lower child seat anchors

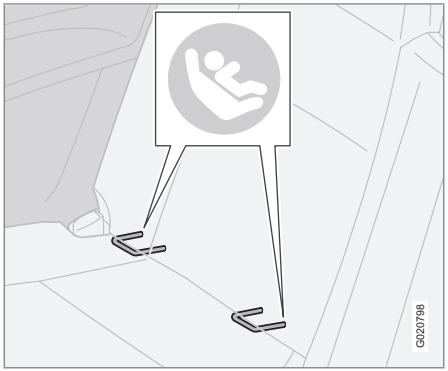

Lower anchors for ISOFIX-equipped child seats are located in both rear seating positions, hidden below the backrest cushions. Symbols on the seat back upholstery mark the anchor positions (see the illustration).

To access the anchors:

1. Put the child restraint in position.
2. Kneel on the child restraint to press down the seat cushion and locate the anchors by feel.
3. Fasten the attachment on the child restraint's lower straps to the ISOFIX lower anchors.
4. Firmly tension the lower child seat straps according to the manufacturer's instructions.

NOTE

- Always follow your child seat manufacturer's installation instructions and use ISOFIX lower anchors whenever possible.

WARNING

- Child seats should never be placed in the center of the rear seat. This area is not intended to be a seating position and is not equipped with a seat belt or ISOFIX anchors.

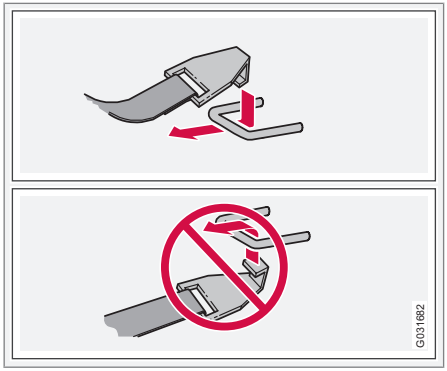

Fasten the attachment correctly to the ISOFIX lower anchors

WARNING

Be sure to fasten the attachment correctly to the anchor (see the illustration). If the attachment is not correctly fastened, the child restraint may not be properly secured in the event of a collision.

Registering a child restraint

Child restraints could be recalled for safety reasons. You must register your child restraint to be reached in a recall. To stay informed about child safety seat recalls, be sure to fill out and return the registration card that comes with new child restraints.

Child restraint recall information is readily available in both the U.S. and Canada. For recall information in the U.S., call the U.S. Government's Auto Safety Hotline at 1-800-424-9393. In Canada, visit Transport Canada's Child Safety website at http://www.tc.gc.ca/roadsafety/childsafety/menu.htm.

Instrument overview..... 46
Instrument panel..... 49
Indicator and warning symbols..... 51
Symbols – instrument panel..... 53
Information display..... 56
12-volt sockets..... 58
Lighting panel..... 59
Left-side steering wheel lever..... 61
Trip computer..... 63
Cruise control*..... 65
Right-side steering wheel lever..... 67
Steering wheel adjustment, Hazard warning flashers..... 69
Parking brake..... 70
Power windows..... 71
Mirrors..... 72
Personal settings..... 75
HomeLink® Wireless Control System*..... 77

G020901

* Option/accessory, for more information, see Introduction.

INSTRUMENTS AND CONTROLS

02

Instrument overview

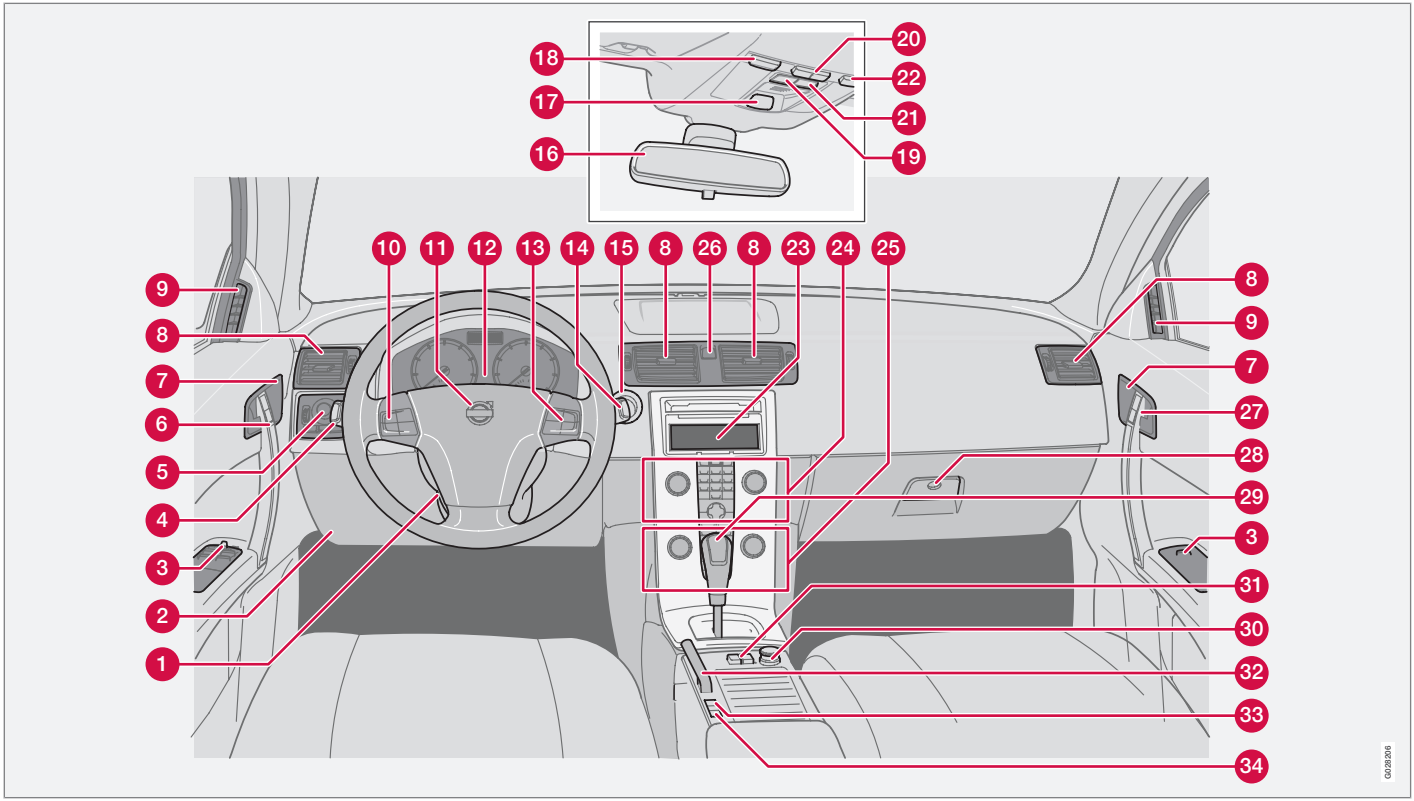

Instrument overview

1	Steering wheel adjustment
2	Hood opener
3	Controls in front doors
4	Left steering wheel lever
5	Lighting panel, fuel filler door opener
6	Door open handle and locking button
7	Lock indicator light
8	Climate system air vent
9	Side window air vent
10	Cruise control
11	Horn, airbag
12	Main instrument panel
13	Audio controls
14	Right steering wheel lever
15	Ignition switch
16	Rear-view mirror
17	Seat belt reminder and Occupant Weight Sensor indicator
18	Driver's side reading light
19	Movement detector*, alarm sensor
20	Courtesy lighting switch
21	Position for accessory switch
22	Passenger's side reading light
23	Display for climate control, personal settings, and audio system
24	Controls for personal settings and audio system
25	Controls for climate system
26	Hazard warning flashers
27	Door open handle, and locking button
28	Glove compartment
29	Gear selector
30	12-volt socket
31	Switch for raising/lowering the power retractable hard top
32	Parking brake
33	Position for optional equipment
34	Position for optional equipment

Instrument overview

Control panel in driver's door

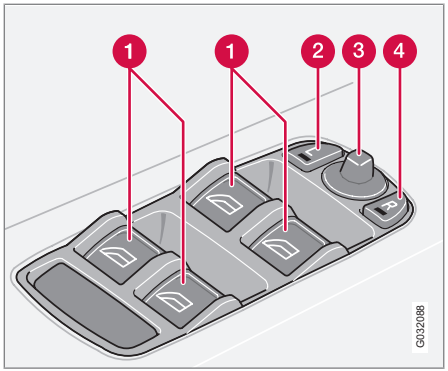

1	Power windows
2	Door mirror button, driver's side
3	Door mirror adjustment control
4	Door mirror button, passenger's side

Instrument panel

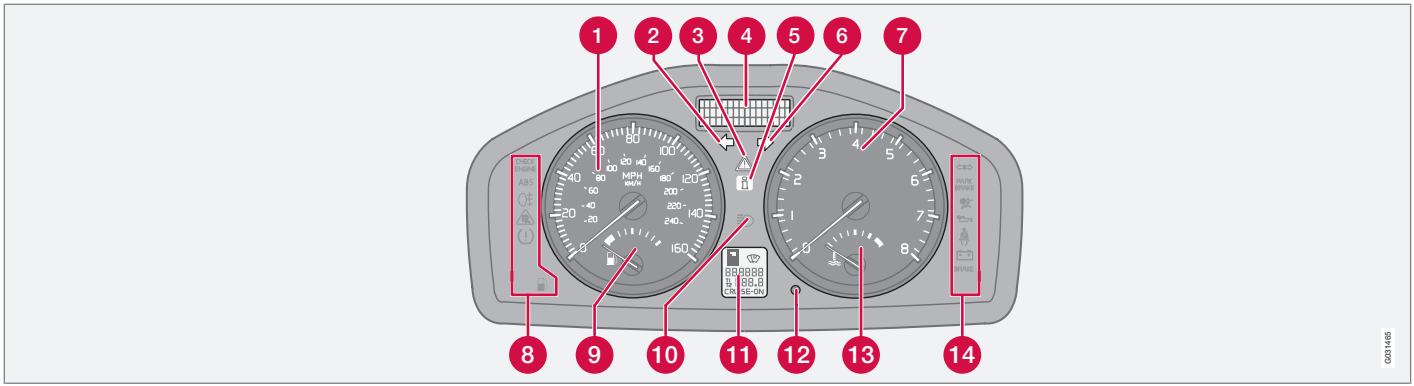

1. Speedometer
2. Turn signal, left
3. Warning symbol – See the following pages for additional information.
4. Information display – The display presents information and warning messages, the ambient temperature, clock, etc. When the ambient temperature is between 23 °F and 36 °F (–5 °C and +2 °C), a snowflake symbol is shown in the display. This symbol serves as a warning for possible slippery road surfaces. Please note that this symbol does not indicate a fault with your car. At low speeds, or when the car is not moving, the temperature readings may be slightly higher than the actual ambient temperature.
5. Information symbol – See the following pages for additional information.
6. Turn signal, right
7. Tachometer – Shows engine speed in thousands of revolutions per minute (rpm). Do not drive continuously with the needle in the red area of the dial, which indicates maximum allowable engine rpm range. Instead, shift to a higher gear or slow the vehicle down. The engine management system will automatically prevent excessively high engines speeds. This will be noticeable as a pronounced unevenness in engine speed.
8. Indicator and information symbols
9. Fuel gauge, see page 269 for fuel tank volume. When a warning light in the gauge comes on, the vehicle should be refueled as soon as possible, see page 63 for more information on fuel level and consumption in the "Trip computer" section.
10. High beam indicator
11. Function display – This window displays information on functions such as the

Instrument panel

odometer, trip odometers, optional rain sensor, and cruise control.

12 Trip odometer reset button – The trip odometers are used to measure short distances. Press the button briefly to switch between the odometer for the car's total mileage and the two trip odometers, T1 and T2. A long press (more than 2 seconds) resets the currently selected trip odometer.

13 Temperature gauge – The gauge indicates the temperature of the engine cooling system. If the temperature is abnormally high and the needle enters the red zone, a message is shown in the display. Bear in mind that auxiliary lamps in front of the air intake reduce the cooling capacity at high outside temperatures and high engine loads.

14 Indicator and warning symbols

Function check

The indicator and warning symbols[1] light up when you turn the ignition key or the optional keyless drive start control to the driving position (position **II**) before starting. This shows that the symbols are functioning.

When the engine starts, all symbols go out. If the engine is not started within 5 seconds, all of the symbols except the malfunction indicator light (**CHECK ENGINE**) and the oil pressure warning light will go out. Certain symbols may not have their functions illustrated, depending on the car's equipment.

The **PARK BRAKE** symbol will not go out until the parking brake has been released.

Symbols in the center of the instrument panel

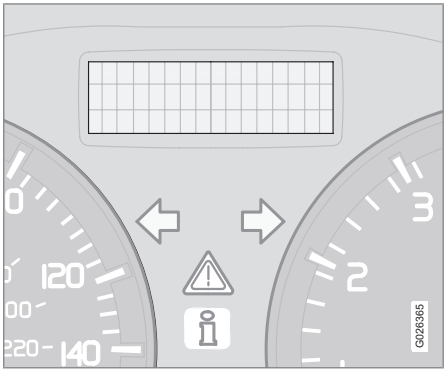

Warning symbol

The red warning symbol lights up to indicate a fault that could affect the car's drivability.This symbol illuminates when the vehicle is traveling at speeds above 5 mph (7 km/h). A text explaining the nature of the fault will also be shown in the information display. The symbol and accompanying text will remain on until the fault has been corrected. This symbol may also light up in combination with other indicator or warning symbols.

If the red warning symbol lights up:

1. Stop the car as soon as possible in a suitable location.
2. Read the message in the information display.
3. Follow the instructions provided, or contact a trained and qualified Volvo service technician. Erase the message by pressing **READ**, see page 56.

Information symbol

The yellow information symbol lights up to alert the driver to a message in the information display. This symbol illuminates when the vehicle is traveling at speeds below 5 mph (7 km/h).

The message can be erased by pressing the **READ** button, see page 56, or will disappear automatically (the length of time required for the message to disappear varies, depending on the function indicated).

When the message "**TIME FOR REGULAR SERVICE**" is displayed, the text can be erased and the information symbol light can be turned off by pressing the **READ** button. The text will disappear and the symbol light will go out automatically after two minutes.

[1] On certain engines, the symbol for low oilpressure is not used. Instead, a text warning is provided in the information display, see page 214.

Indicator and warning symbols

This symbol may also light up in combination with other indicator or warning symbols.

NOTE

The car can still be driven after the information symbol has come on. The car can be driven for 1–2 weeks after service-related information has been displayed.

Symbols – left side

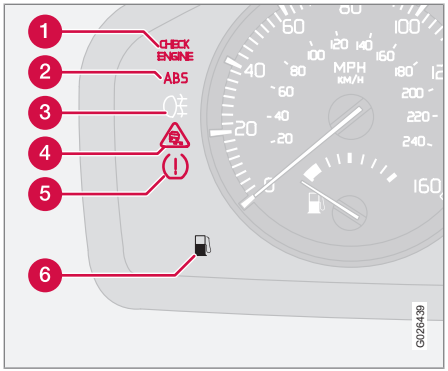

1. Malfunction indicator light

As you drive, a computer called On-Board Diagnostics II (OBDII) monitors your car's engine, transmission, electrical and emission systems.

The **CHECK ENGINE** light will light up if the computer senses a condition that potentially may need correcting. When this happens, please have your car checked by a trained and qualified Volvo service technician as soon as possible.

A **CHECK ENGINE** light may have many causes. Sometimes, you may not notice a change in your car's behavior. Even so, an uncorrected condition could hurt fuel economy, emission controls, and drivability. Extended driving without correcting the cause could even damage other components in your car.

NOTE

Canadian models are equipped with the second symbol.

2. Anti-lock Brake system (ABS)

If the warning light comes on, there is a malfunction of the ABS system (the standard braking system will still function).

The vehicle should be driven to a trained and qualified Volvo service technician for inspection, see page 150 for additional information.

NOTE

Canadian models are equipped with the second symbol.

3. Rear fog light

This symbol indicates that the rear fog light (located in the driver's side taillight cluster) is on.

4. Stability system DSTC

This indicator symbol flashes when the DSTC (Dynamic Stability and Traction control system) is actively working to stabilize the car, see page 152 for more detailed information.

5. Tire Pressure Monitoring System

This system monitors inflation pressure in the tires. See page 195 for more information.

6. Fuel level warning light

When this light comes on, the vehicle should be refueled as soon as possible.

Symbols – instrument panel

Symbols – right side

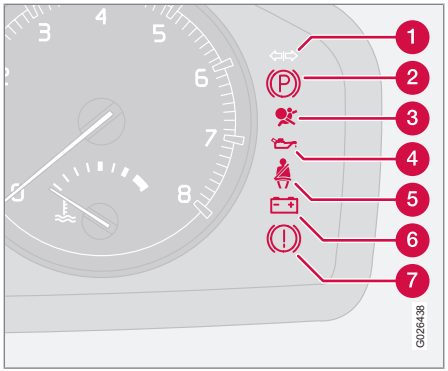

1. Turn signal indicator for trailer (certain markets only)

If you are towing a trailer, this light will flash simultaneously with the turn signals on the trailer. If the light does not flash when signaling, one of the turn signals on the trailer or on the car are not functioning properly.

2. Parking brake applied

This light is on when the parking brake (hand brake) is applied. The parking brake lever is situated between the front seats, see page 70 for more information.

NOTE

Canadian models are equipped with the second symbol.

3. SRS system warning light

If this light comes on while the car is being driven, or remains on for longer than approximately 10 seconds after the car has been started, the SRS system's diagnostic functions have detected a fault in a seat belt lock or pretensioner, a front airbag, side impact airbag, and/or an inflatable curtain. Have the system(s) inspected by a trained and qualified Volvo service technician as soon as possible.

4. Oil pressure warning light[1]

If the light comes on while driving, the car, stop the engine immediately, and check the engine oil level. If the oil level is normal and the light stays on after restart, have the car towed to the nearest trained and qualified Volvo service technician. After hard driving, the light may come on occasionally when the engine is idling. This is normal, provided it goes off when the engine speed is increased.

5. Seat belt reminder

This symbol (and the seat belt reminder light above the rear view mirror) will light up if either front seat occupant has not buckled his/her seat belt. If the car is not moving, the symbols will go out after approximately 6 seconds.

6. Generator warning light

If the light comes on while the engine is running, have the charging system checked by an authorized Volvo workshop.

[1] On certain engines, this symbol is not used to indicate low oil pressure. Instead, a text warning is provided in the information display, see also page 214.

7. Brake failure warning light

If this light comes on while driving or braking, stop the car as quickly as possible in a safe place, open the hood, and check the brake fluid level in the reservoir, see page 213 for the location of the reservoir.

NOTE

Canadian models are equipped with the second symbol.

WARNING

If the fluid level is below the **MIN** mark in the reservoir or if a **Brake failure – Service urgent** message is displayed in the information display: **DO NOT DRIVE**. Have the car towed to a trained and qualified Volvo service technician and have the brake system inspected.

If the BRAKES and ABS warning lights come on at the same time, this could indicate a fault in the brake system.

In this case:

1. Stop the car in a suitable place and switch off the engine.
2. Restart the engine.
3. If both warning lights go off, no further action is required and the car can be driven.
4. If both lights remain on after the engine has been restarted, switch off the engine again and check the brake fluid level, see page 213 for the location of the reservoir.

Door open warning

The driver will be alerted if one of the doors, the hood or the trunk are open or ajar.

At low speeds

If the car is moving at a speed of less than approximately 3 mph (5 km/h), the Information symbol in the instrument panel will light up and a message will be shown in the information display indicating which door(s), etc is not completely closed.

At higher speeds

If the car is moving at a speed above approximately 6 mph (10 km/h), the Warning symbol in the instrument panel will light up and a message will be shown in the information display indicating which door(s), etc is not completely closed.

Information display

Messages

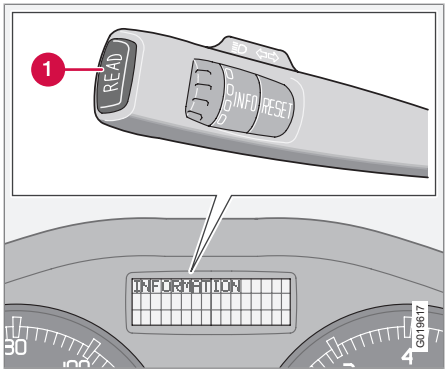

When an indicator or warning light in the instrument panel comes on, a message is also shown in the information display. To read a message:

1. Press the **READ** button (1).
2. Pressing **READ** repeatedly enables you to scroll to any other messages that may be stored.

NOTE

If a message is displayed when e.g. you are using the trip computer, this message must be read before you can access the trip computer.

Message	Meaning
STOP SAFELY[A]	Stop the vehicle in a safe place and switch off the engine to help prevent the risk of serious damage.
HIGH ENGINE TEMP STOP SAFELY	Stop the vehicle in a safe place and switch off the engine to help prevent the risk of serious damage.
SERVICE URGENT[A]	Take your car to a trained and qualified Volvo service technician for inspection immediately.
SEE MANUAL[A]	Refer to your owner's manual. For additional information, please contact your Volvo retailer.

Message	Meaning
SERVICE REQUIRED[A]	Take your car to a trained and qualified Volvo service technician for inspection as soon as possible (but preferably before the next scheduled maintenance service).
BOOK TIME FOR SERVICE	Book time for service at an authorized Volvo workshop.
TIME FOR REGULAR MAINTENANCE	This message is affected by the number of miles/km driven, by the number of months, or by the number of engine hours since the service reminder was reset at the most recent regularly scheduled service.
MAINTENANCE OVERDUE	If the vehicle is not serviced according to schedule, the warranty may not apply to damaged parts, etc.

Message	Meaning
TIME FOR REGULAR MAINTE-NANCE	This message is affected by the number of miles/km driven, by the number of months, or by the number of engine hours since the service reminder was reset at the most recent regularly scheduled service.
REMINDER CHECK OIL LEVEL	Stop as soon as possible and switch off the engine, check the oil level and top up if necessary, see page 214.

A This is part of the message. Additional information will also be displayed.

12-volt sockets

12-volt socket (front seat)

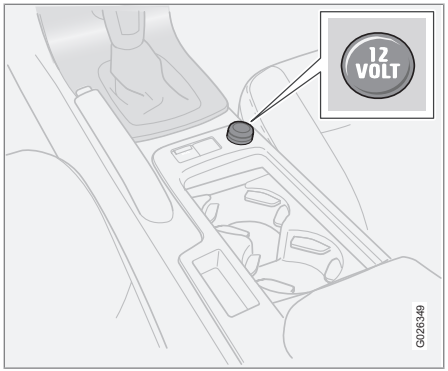

12-volt socket, auxiliary equipment

The 12-volt socket can be used to plug in certain accessories such as cellular telephones, etc. The maximum current is 10 A. The key must be in position **I** (or higher) for the auxiliary socket to function.

Ashtrays/cigarette lighter

The auxiliary socket can also be used for a cigarette lighter[1], and ashtrays, which can be purchased from your Volvo retailer.

NOTE

The cover should be kept on when the auxiliary socket is not in use.

[1] Accessory.

Parking lights

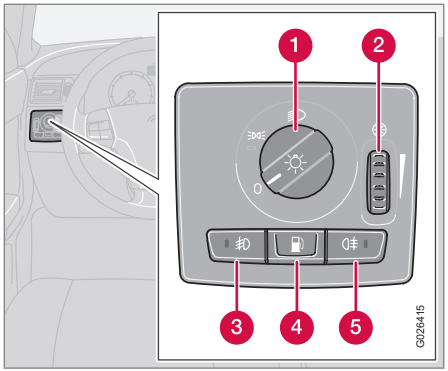

1. Light switch
2. Thumb wheel for adjusting brightness of instrument lighting
3. Daytime running lights
4. To unlock the fuel filler door
5. Rear fog light

Pos.	Lighting
0	All lighting off. Low beam headlights (daytime running lights) will automatically come on if the ignition key is in position II. Front and rear parking lights and license plate lights will also be on. High beams can be briefly flashed. The headlights switch off automatically when the ignition key is removed.
	Parking lights
	Daytime running lights. High beams and high beam flash can be used in this position.

The front and rear parking lights can be turned on even when the ignition is switched off.

– Turn switch (1) to the parking light position.

The license plate lights also illuminate when the parking lights are switched on.

Headlights

1. Turn the ignition key to position **II**.
2. The low beam headlights (daytime running lights) illuminate automatically, except when the light switch (1) is in the parking light position[1].

NOTE

See page 61 for information on switching between high and low beams.

Brake lights

The brake lights come on automatically when the brakes are applied.

Fog lights

Front fog lights*

The front fog lights can be used in combination with either the headlights or the parking lights.

1. Turn the ignition key to position **II**.
2. Press button (3) to turn on the front fog lights.

An indicator light in the button illuminates when the front fog lights are on.

[1] On Canadian models, the daytime running lights will remain on with the light switch in this position.

Lighting panel

Rear fog light

The single rear fog light is located in the driver's side taillight cluster.

The rear fog light will only function in combination with the high/low beam headlights or the optional front fog lights.

1. Turn the ignition key to position **II**.
2. Press button (5) to turn on the rear fog light.

An indicator light in the button illuminates when the rear fog light is on.

NOTE

The rear fog light is considerably brighter than the normal taillights and should be used only when conditions such as fog, rain, snow, smoke or dust reduce visibility for other vehicles to less than 500 ft. (150 meters).

Instrument panel lighting

The instrument panel lighting illuminates when the ignition is in position **II** and the light switch (1) is in either position 0 or .

NOTE

To make it easier to read the odometer, trip odometer, clock, and ambient temperature, these gauges illuminate when the vehicle is unlocked and when the key has been removed from the ignition switch. The lighting will go out when the vehicle is locked.

Move the thumb wheel (2) up to increase brightness or down to decrease brightness.

Unlocking the fuel filler door

With the ignition switched off, press button (4) to unlock the fuel filler door. Please note that the fuel filler door will remain unlocked until the car begins to move forward.

An audible click will be heard when the fuel filler door re-locks.

Manually unlocking the fuel filler door

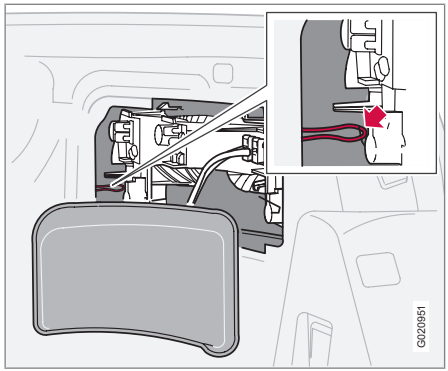

If it should be necessary to manually unlock the fuel filler door from the trunk, the power retractable hard top should be up.

1. Remove the panel covering the taillight housing on the right side of the trunk.
2. Pull the cord that is attached to a hook to pop open the fuel filler door.

When the fuel filler door has opened, return the cord to the hook and replace the taillight cover panel.

Lever positions

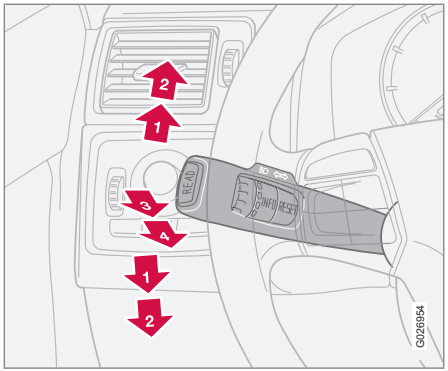

1. Turn signals, lane change position
2. Turn signals, position for normal turns
3. High beam flash
4. Toggle between high and low beams, Home Safe lighting

Turn signals

When turning

– Move the lever as far up or down as possible (to position 2) to start the turn signals.

The turn signals will be cancelled automatically by the movement of the steering wheel, or the lever can be returned to its initial position by hand.

When changing lanes

The driver can automatically flash the turn signals 3 times by:

- Moving the turn signal lever up or down to position 1 and releasing it.
- Moving the lever up or down to position 2 and immediately back to its original position.

NOTE

- This automatic flashing sequence can be interrupted by immediately moving the lever in the opposite direction.
- If the turn signal indicator flashes faster than normal, check for a burned-out turn signal bulb.

High/low beam headlights

Continuous high beams

1. Turn the ignition key to position **II**.
2. With the light switch (1) in position , see page 59, pull the turn signal lever toward the steering wheel (position 4) to toggle between high and low beams.

High beam flash

1. Turn the ignition key to position **II**.
2. Pull the turn signal lever to position 3. The high beams will remain on until the lever is released.

Home safe lighting

When you leave your car at night, you can make use of the home safe lighting function to illuminate the area in front of the car.

1. Remove the key from the ignition switch.
2. Pull the direction indicator lever as far as possible towards the steering wheel (to position 4) and release it.
3. Exit the car and lock the doors.

The headlights and parking lights will illuminate and remain on for 30[1], 60 or 90 seconds. The time interval can be changed according to your

[1] Factory setting.

Left-side steering wheel lever

preferences by using the Personal Settings function, see page 75 for more information.

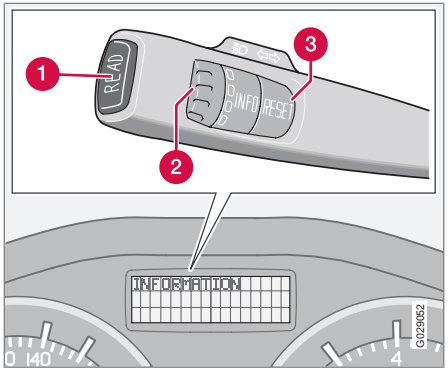

1. **READ** (press to acknowledge/confirm/erase a message)
2. Thumb wheel (used to scroll among the trip computer menus)
3. **RESET**

The trip computer stores information gathered from several systems in your car and has four menus (five on Canadian models) that can be shown in the information display.

- MILES TO EMPTY TANK
- AVERAGE (average fuel consumption)
- INSTANTANEOUS (current fuel consumption)
- AVERAGE SPEED
- ACTUAL SPEED (current speed in mph, Canadian models only)
- DSTC, see page 152

NOTE

Warning messages from the car's monitoring systems will override the trip computer function.

If a warning message is shown in the information display while you are using the trip computer:

1. Acknowledge the message by pressing the **READ** (button 1).
2. Press **READ** again to return to the trip computer function.

Controls

The trip computer functions can be accessed by twisting the thumb wheel (2) one step at a time in either direction. Twisting a final time returns you to the original function.

Resetting

AVERAGE (average fuel consumption) and AVERAGE SPEED can be reset.

1. Select one of these functions.
2. Press **RESET** (3).

MILES TO EMPTY TANK

This function shows the approximate distance that can be driven on the fuel remaining in the tank. The calculation is based on average fuel consumption during the last 20 miles (30 km) of driving and the amount of fuel remaining in the tank when the reading was taken.

When the message **---- miles to empty tank** appears in the display, refuel as soon as possible.

AVERAGE

This value indicates fuel consumption since the last time the trip computer was reset, by pressing **RESET** (button 3). When the engine is switched off, information on fuel consumption is stored and remains in system memory until **RESET** (button 3) is pressed again.

INSTANTANEOUS

This value indicates the current fuel consumption, based on readings taken once per second. When the car is not moving, "----" will be displayed.

AVERAGE SPEED

This value indicates average speed since the last time the trip computer was reset, by pressing **RESET** (button 3). When the engine is switched off, information on average speed is stored and remains in system memory until the **RESET** (button 3) is pressed again.

Trip computer

ACTUAL SPEED (Canadian models only)

This function provides the driver with an instantaneous conversion of the car's current speed from km/h to mph.

NOTE

Trip computer readings may vary slightly depending on the circumference of the tires on the car, tire inflation, or driving style.

Engaging the cruise control function

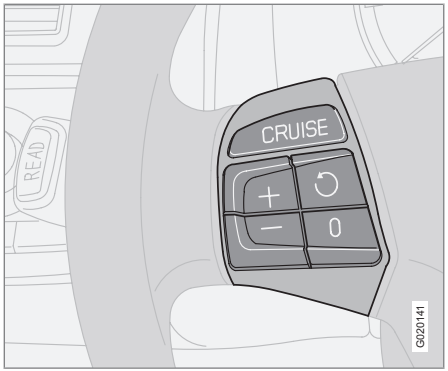

The cruise control buttons are located on the left side of the steering wheel hub.

NOTE

This does not set the vehicle's speed.

1. Press the **CRUISE** button. CRUISE will appear in the function display in the center of the instrument panel.
2. Press + or – to set the current speed. CRUISE ON will be displayed.

Increasing or decreasing speed

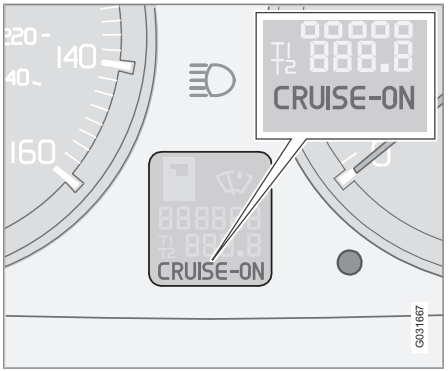

Use + or – in the following ways to increase or decrease the vehicle's speed:

1. Press and hold down + or – until the vehicle reaches the desired speed. This will become the set speed when the button is released.
2. Press + or – for approximately a half second and release the button to increase or decrease vehicle speed by approximately 1 mph (1.6 km/h).

NOTE

- Cruise control will not function at speeds below 20 mph (30 km/h).
- Momentary acceleration, for less than 1 minute (e.g. when passing another car), does not affect cruise control operation. The car will automatically return to the previously set speed when the accelerator pedal is released.

Temporarily disengaging the cruise control

- Press **0** to temporarily disengage cruise control.

CRUISE will appear in the function display. The currently set speed is stored in the system's memory.

Cruise control is also automatically disengaged:

- If the speed drops below approximately 20 mph (30 km/h) when driving uphill.
- When the brake or clutch pedal is depressed.
- If the gear selector is moved to position **N**.

Cruise control*

- During wheel spin or wheel lock-up.
- If the vehicle's speed is increased by using the accelerator pedal for more than 1 minute.

Returning to the set speed

Press the button to resume the previously set speed. **CRUISE ON** will be displayed.

Disengaging cruise control

Cruise control can also be disengaged by:

- Pressing the **CRUISE** button (**CRUISE ON** will no longer be shown in the function display).
- Putting the gear selector in Neutral (**N**).

WARNING

Cruise control should not be used in heavy traffic or when driving on wet or slippery roads. Cruise control may not maintain set speed on steep downgrades.

* Option/accessory, for more information, see Introduction.

Windshield wipers

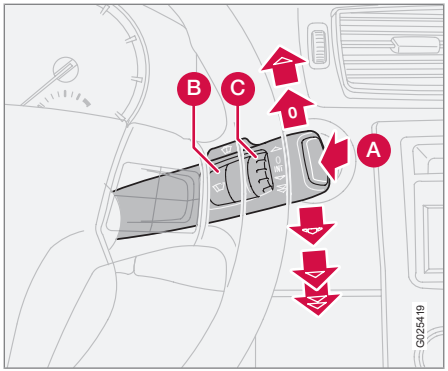

A Windshield/headlight washers

B Rain sensor – on/of, see page 67

C Thumb wheel

Windshield wipers off

The windshield wipers are off when the lever is in position **0**.

Manual wiper function

From position **0**, move the lever upward. The windshield wipers will sweep one stroke at a time for as long as the lever is held up.

Intermittent wiper function

With the lever in this position, you can set the wiper interval by moving the thumb wheel (C) upward to increase wiper speed or downward to decrease the speed.

Continuous wiper function

The wipers operate at "normal" speed.

High speed wiper function.

A – Windshield washers

Pull the lever toward the steering wheel and release it. The wipers will make 2–3 sweeps across the windshield after the lever has been released.

CAUTION

- Use ample washer fluid when washing the windshield. The windshield should be thoroughly wet when the wipers are in operation.
- Before using the wipers, ice and snow should be removed from the windshield/rear window. Be sure the wiper blades are not frozen in place.

Headlight washers (certain models)

When the lever has been pulled, high pressure jets mounted in the bumper will spray the headlights.

The following applies to conserve washer fluid, see page 59 for information on the light switch positions:

Low/high beam headlights on

The headlights will be washed the first time the windshield is washed. Thereafter, the headlights will only be washed once for every five times the windshield is washed within a 10 minute period.

Parking lights on

Optional Dual Xenon headlights will be washed once for every five times the windshield is washed.

Normal halogen headlights will not be washed.

Right-side steering wheel lever

B – Rain sensor*

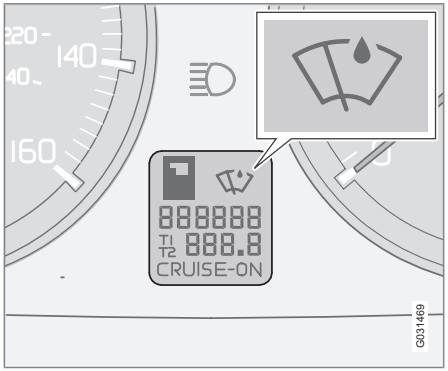

The rain sensor regulates windshield wiper speed according to the amount of water on the windshield. The sensitivity of the rain sensor is adjusted by moving the thumb wheel (C in the illustration on the previous page) up (the wipers will sweep the windshield more frequently) or down (the wipers will sweep the windshield less frequently).

On/Off

Activating the rain sensor

1. Switch on the ignition.
2. Put the windshield wiper lever in position **0**.
3. Press button B (see page 67). The rain sensor symbol will appear in the lower display.

Manual deactivation

The rain sensor can be deactivated by:

Pressing button (B).

or

Moving the windshield wiper lever down.

NOTE

The rain sensor function will remain activated if the lever is briefly moved up to activate the "manual sweep" function.

CAUTION

The rain sensor should be deactivated when washing the car in an automatic car wash, etc. If the rain sensor function is left on, the wipers will start inadvertently in the car wash and could be damaged.

Automatic deactivation

The rain sensor is deactivated automatically in the following situations:

- When the key is removed from the ignition.
- Five minutes after the ignition is switched off if the key is left in the ignition.

C – Thumb wheel

The thumb wheel is used to set the wiper interval when intermittent wiping is selected, or the sensitivity to the amount of rain on the windshield when the rain sensor is selected. Move the wheel upward or downward to increase/decrease wiper speed when the intermittent function is selected, or to increase/decrease the optional rain sensor's sensitivity when the this function is activated.

* Option/accessory, for more information, see Introduction.

Steering wheel adjustment

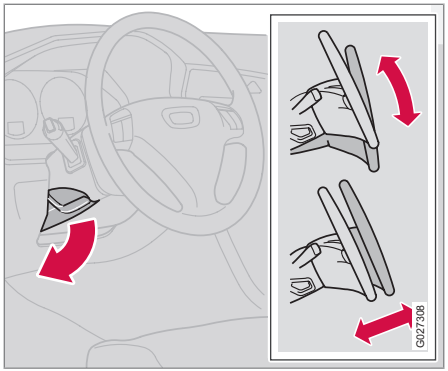

Both the height and the reach of the steering wheel can be adjusted to a comfortable position for the driver.

1. Pull down the lever on the steering column to release the steering wheel.
2. Adjust the steering wheel to a suitable position.
3. Press the lever back into place to lock the steering wheel in the new position. If necessary, press the steering wheel slightly while pressing the lever into the locked position.

Check that the steering wheel is locked in the new position.

WARNING

Never adjust the steering wheel while driving.

Hazard warning flashers

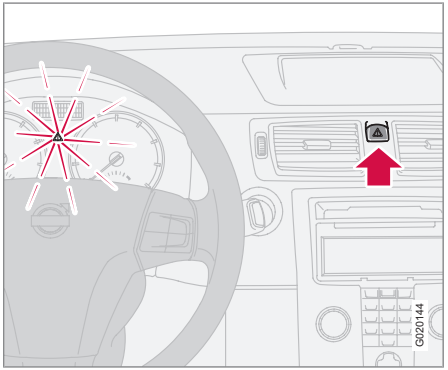

The four-way flasher should be used to indicate that the vehicle has become a traffic hazard.

1. Press the triangular button in the center dash.
2. Press the button again to turn off the flashers.

NOTE

- Regulations regarding the use of the hazard warning flasher may vary, depending on where you live.
- The hazard warning flashers will be activated automatically if an airbag deploys.

Parking brake

Parking brake (hand brake)

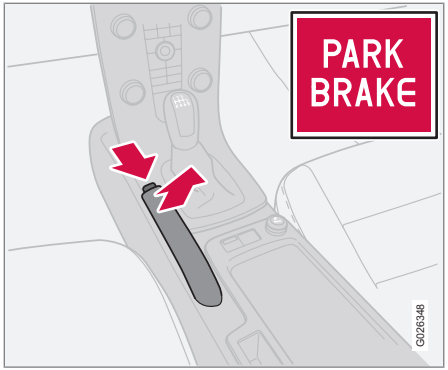

The parking brake lever is located between the front seats.

NOTE

The indicator light will illuminate even if the parking brake has only been partially applied.

When applying the parking brake

1. Press firmly on the brake pedal.
2. Pull the parking brake lever up firmly to its full extent.
3. Release the brake pedal and ensure that the vehicle is at a standstill.
4. If the vehicle rolls, the parking brake lever must be pulled more firmly.
5. When parking a vehicle always put the gear selector in first gear (for manual transmission) or **P** (for automatic transmission).

Parking on a hill

- If the vehicle is pointing uphill, turn the front wheels so that they point away from the curb.
- If the vehicle is pointing downhill, turn the front wheels so that they point toward the curb.

Releasing the parking brake

1. Press firmly on the brake pedal.
2. Pull the lever up slightly, press the button at the end of the lever and lower the lever completely.

WARNING

Pull up the parking brake lever up firmly to its full extent.

Operation

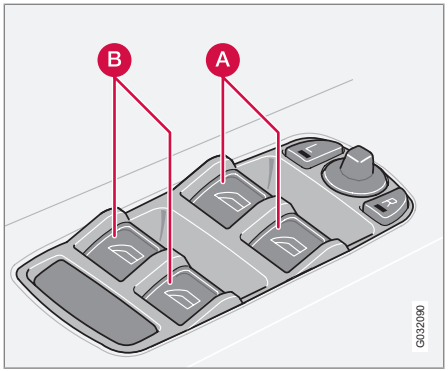

Control panel in driver's door

A Open/close front windows

B Open/close rear windows

The power windows are controlled by buttons in the arm rests.

- The ignition must be ON (ignition key in position **I**, **II** or the engine running) for the power windows to function.
- The power windows will also function after the ignition has been switched off as long as neither of the front doors has been opened.

Opening a window

Lightly press down the front edge of any of the buttons (A or B) to the first detent ("stop") to open a window to the position of your choice.

WARNING

- Always remove the ignition key when the vehicle is unattended.
- Never leave children unattended in the vehicle.
- Make sure that the windows are completely unobstructed before they are operated.

1. Press down the front part of one or both buttons A as far as possible and release to automatically open the front window(s) completely.
2. To stop the window at any time, pull the button up.

NOTE

To reduce buffeting wind noise if the rear windows are opened, also open the front windows slightly.

Closing a window

1. Lightly pull up the front edge of any of the buttons (A or B) to the first detent ("stop") to close a window to the position of your choice.
2. Pull up the front part of one or both buttons (A) as far as possible and release to automatically close the front window(s) completely.

Power window control – front passenger's side

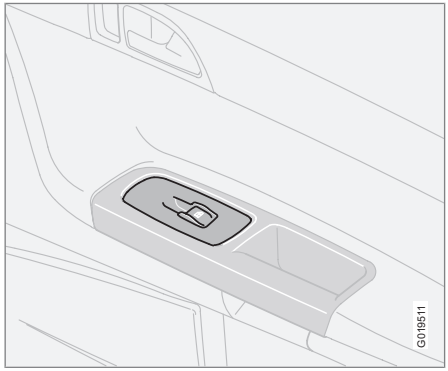

The control for the power window in the front passenger's door operates that window only.

Mirrors

Rearview mirror

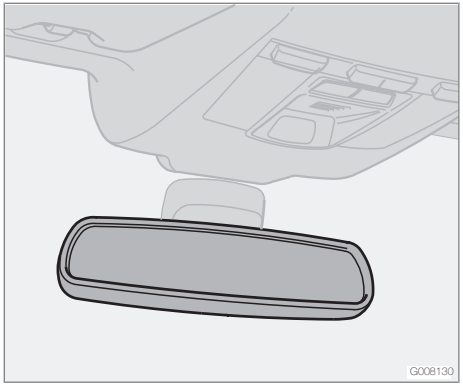

Auto-dim function
An integrated sensor reacts to headlights from following traffic and automatically reduces glare.

Rearview mirror with compass*

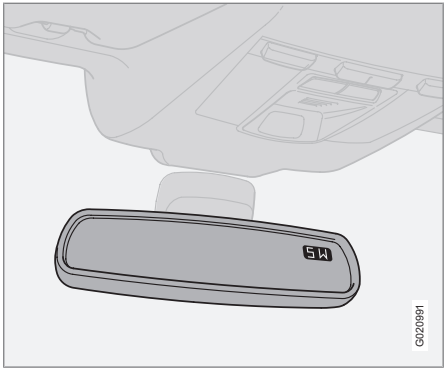

The upper right-hand corner of the rearview mirror has an integrated display that shows the compass direction toward which the car is pointing. Eight different directions can be displayed: N, NE, E, SE, S, SW, W and NW. The display shows your car's orientation with respect to true north.

Calibrating the compass

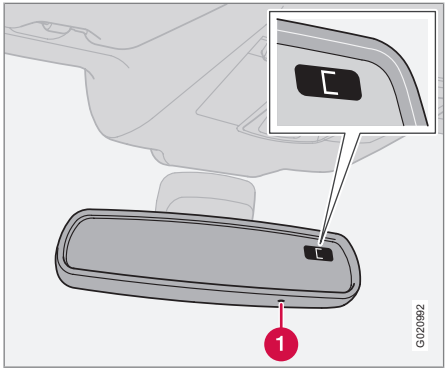

The earth is divided into 15 magnetic zones. The compass is initially set for the zone to which the car was delivered, and should always be adjusted if the car is driven to a new magnetic zone. A "C" will be displayed if calibration becomes necessary.

To calibrate the compass:

1. Stop the car in a large, open area, away from traffic.
2. Using a pen or similar object, hold the button (1) depressed for at least 6 seconds. "C" will be displayed.

* Option/accessory, for more information, see Introduction.

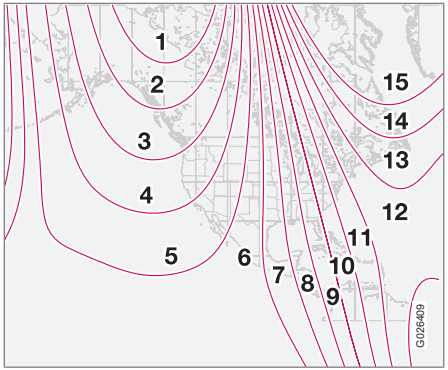

Magnetic zones

3. Press button (1) for at least 3 seconds to display the number of the current magnetic zone.
4. Press button (1) repeatedly until the number for the required geographical area (1–15) is displayed. "C" will be displayed again.
5. Drive slowly in a circle at a maximum speed of 6 mph (10 km/h) until a compass direction is displayed.

Calibration is complete.

Power door mirrors

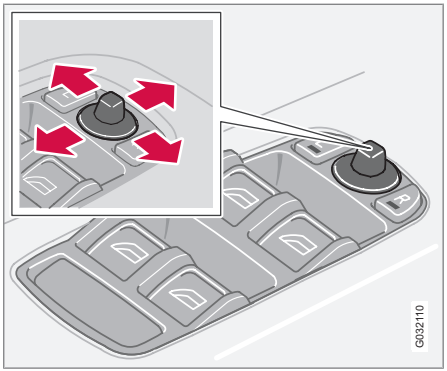

The mirror control switches are located on the driver's door armrest.

Adjusting the mirrors

WARNING

- The mirrors should always be adjusted prior to driving.
- Objects seen in the passenger's side wide-angle door mirror are closer than they appear to be.

Driver's door mirror:

– Press the **L** button (a light in the switch will go on) to activate the adjustment control. Use this control to adjust the driver's door mirror.

Passenger's door mirror:

1. Press the **R** switch (a light in the switch will go on) to activate the adjustment control. Use this control to adjust the passenger's door mirror.
2. After you have adjusted the mirror(s), press the **L** or **R** switch again (the LED will go out) to deactivate the adjustment control.

Storing the mirrors' position

The position of the door mirrors is stored when the vehicle is locked. The next time the driver's door is unlocked with the same remote key and that door is opened within 2 minutes, the optional power driver's seat and side door mirrors will automatically move to the position that they were in when the doors were most recently locked with the same remote key.

Folding power door mirrors*

The mirrors can be folded in for parking/driving in narrow spaces.

Folding the mirrors in

1. Press down the **L** and **R** mirror control buttons on the driver's door at the same time.
2. Release them after approximately one second. The mirrors automatically fold in to the fully retracted position.

Mirrors

Folding the mirrors out

Fold out the mirrors by pressing down the **L** and **R** buttons at the same time. The mirrors automatically fold out to the fully extended position.

Automatic folding

When the vehicle is locked/unlocked with the remote key or with the optional keyless drive system (see page 124), the power door mirrors with automatically fold in or out.

NOTE

The door mirrors will not fold out automatically when the vehicle is unlocked if they were folded in using the buttons on the driver's door control panel.

This function can be activated/deactivated in Personal settings (see page 75). In the menu system, go to **Car settings ➔ Fold mirr. when locking**.

Return to "neutral" position

If a mirror has been inadvertently moved (bumped in a parking lot, etc.) from its original (neutral) position, it must be moved back to this position before automatic folding will function again.

To do so:

1. Fold in the mirrors by pressing the **L** and **R** mirror control buttons on the driver's door at the same time.
2. Fold them out again by pressing the **L** and **R** mirror control buttons.

This returns the mirrors to their original (neutral) positions.

Blind Spot Information System (BLIS)*

The Blind Spot Information System (BLIS) is an information system that indicates the presence of another vehicle in the side-view mirror's "blind area." See page 162 for detailed information.

* Option/accessory, for more information, see Introduction.

Control panel

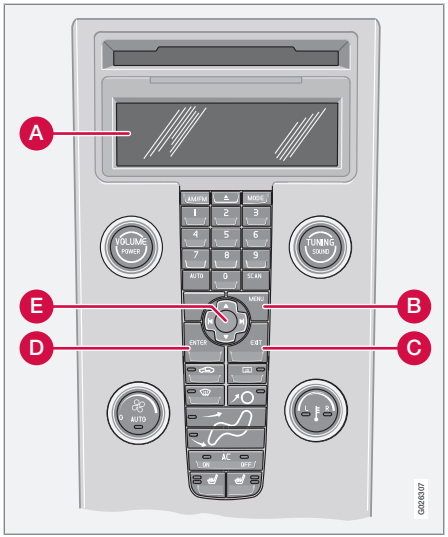

A Display

B Menu button

C Exit button

D Enter button

E Menu navigation controls

Personal settings can be made for some of the car's functions, such as the central locking system, climate control, and the audio system. Please refer to page 239 for more information on the audio functions that can be adjusted. The settings are presented in the display (A).

To access the menu and adjust settings

1. Press **MENU** (B).
2. Scroll to **Car Settings** using the menu navigation control (E).
3. Press **ENTER** (D).
4. Select an alternative using the menu navigation control (E).
5. Confirm your selection by pressing **ENTER**.

To exit the menu

– Press **EXIT** (C).

Available settings

Clock adjust

To set the time:

1. Use the number keys or the up/down arrow keys on the navigation control (E) to change the hour or minute.
2. Select hour(s) or minute(s) to be changed with the left/right arrow keys.
3. Press **ENTER** to start the clock.

NOTE

If you are currently using the 12-hour time setting, use the up/down arrow keys to select **AM/PM** after the minute-setting has been adjusted.

Lock confirmation light

When the car is locked/unlocked with the remote key, the direction indicators can be selected to flash to confirm the action. The alternatives On/Off are available for both locking and unlocking.

Autolock

When the car starts to move, the doors and trunk can be locked automatically. The alternatives On/Off are available.

NOTE

Pulling the handle twice on a door unlocks and opens that door.

Unlock

There are two alternatives for unlocking:

Personal settings

- Global (All doors) – unlocks all doors and the trunk with one press on the remote key.
- Two Step (Two-stage unlocking) – This alternative unlocks the driver's door with one press on the remote key. A second press unlocks the passenger's door and the trunk

Automatically folding the door mirrors

The setting makes it possible to automatically fold the door mirrors in or out when the vehicle is locked or unlocked. See page 73.

Operating side windows

The following alternative can be selected for opening all side windows at the same time by pressing and holding the Unlock button on the central locking system's remote key, (see page 128 for additional information).

- Auto open all windows On/Off

Temporarily turning off the double locking function and alarm sensor(s)

The double locking function and the alarm sensors can be temporarily turned off (if, for example, a person or a pet remains in the vehicle when the doors are locked from outside with the remote key, and the power retractable hard top is down. There are two alternatives:

Activate once and **Ask on exit**, see page 131 for additional information.

Approach lighting

This alternative determines the length of time for which the car's lights will remain on when the Approach light button on the central locking system's remote key is pressed. Intervals of 30/60/90 seconds may be selected, see the section "Remote key functions" for more information.

Home safe lighting

This alternative determines the length of time for which the car's lights will remain on when the high beam lever on the steering column is pulled toward the wheel with the ignition switched off. Intervals of 30/60/90 seconds may be selected, see page 61 for information on using this function.

Information

- VIN number – The VIN (Vehicle Identification Number) is the car's unique identity number.
- Number of Keys – the number of keys registered for the car is displayed here.

Climate functions

- Blower speed in AUTO mode – the blower speed can be set to AUTO mode in models equipped with ECC. Choose between "Low", "Normal" and "High".
- Timer for recirculation – when the timer is active, the air recirculates in the car for 3–12 minutes depending on the ambient temperature. Select On/Off depending on whether the recirculation timer is to be active or not.

Keyless locking and unlocking*

The following alternatives can be selected for locking and unlocking the doors and trunk:

- All doors – all doors are locked or unlocked at the same time.
- Doors on the same side – front and rear doors on the same side are unlocked together.
- Both front doors – both front doors are unlocked together.
- One front door – either of the front doors can be unlocked separately[1].

Reset to factory settings

Use this alternative to return to the default climate system settings.

[1] Factory default.

* Option/accessory, for more information, see Introduction.

HomeLink® Wireless Control System*

Introduction

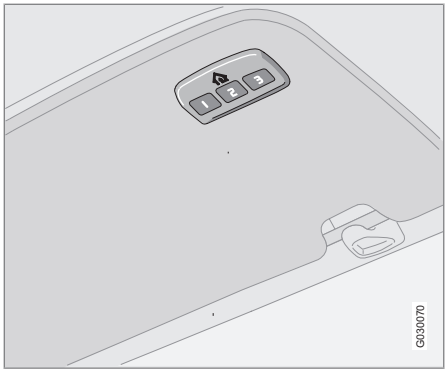

The HomeLink[1] Wireless Control System provides a convenient way to replace up to three hand-held radio-frequency (RF) transmitters used to activate devices such as gate operators, garage door openers, entry door locks, security systems, even home lighting. Additional HomeLink information can be found on the Internet at www.homelink.com.

WARNING

- If you use HomeLink to open a garage door or gate, be sure no one is near the gate or door while it is in motion.
- When programming a garage door opener, it is advised to park outside of the garage.
- Do not use HomeLink with any garage door opener that lacks safety stop and reverse features as required by U.S. federal safety standards (this includes any garage door opener model manufactured before April 1, 1982). A garage door that cannot detect an object - signaling the door to stop and reverse - does not meet current U.S. federal safety standards. For more information, contact HomeLink at: www.homelink.com.

Retain the original transmitter of the RF device you are programming for use in other vehicles as well as for future HomeLink programming. It is also suggested that upon the sale of the vehicle, the programmed HomeLink buttons be erased for security purposes. Refer to “Erasing HomeLink Buttons”.

Programming HomeLink

NOTE

Some vehicles may require the ignition switch to be turned on or to the second (“accessories”) position for programming and/or operation of HomeLink. It is also recommended that a new battery be placed in the hand-held transmitter of the device being programmed to HomeLink for quicker training and accurate transmission of the radio-frequency signal.

1. Position the end of your hand-held transmitter 1–3 inches (5–14 cm) away from the HomeLink button you wish to program while keeping the indicator light in view.
2. Simultaneously press and hold both the chosen HomeLink and hand-held transmitter buttons until the HomeLink indicator light changes from a slow to a rapidly blinking light. Now you may release both the HomeLink and hand-held transmitter buttons.

[1] HomeLink and the HomeLink house are registered trademarks of Johnson Controls, Inc.

HomeLink® Wireless Control System*

NOTE

Some devices may require you to replace this Programming Step 2 with procedures noted in the “Gate Operator / Canadian Programming” section. If the HomeLink indicator light does not change to a rapidly blinking light after performing these steps, contact HomeLink at www.homelink.com.

3. Firmly **press, hold for five seconds and release** the programmed HomeLink button up to two separate times to activate the door. If the door does not activate, press and hold the just-trained HomeLink button and observe the indicator light.
   - If the indicator light **stays on constantly, programming is complete** and your device should activate when the HomeLink button is pressed and released.
   - If the indicator light blinks **rapidly for two seconds and then turns to a constant light continue with “Programming” steps 4-6** to complete the programming of a rolling code equipped device (most commonly a garage door opener).
4. At the garage door opener receiver (motor-head unit) in the garage, locate the “learn” or “smart” button. This can usually be found where the hanging antenna wire is attached to the motor-head unit.
5. Firmly press and release the “learn” or “smart” button. (The name and color of the button may vary by manufacturer.) There are 30 seconds to initiate step 6.
6. Return to the vehicle and firmly press, hold for two seconds and release the programmed HomeLink button. Repeat the “press/hold/release” sequence a second time, and, depending on the brand of the garage door opener (or other rolling code equipped device), repeat this sequence a third time to complete the programming process.

HomeLink should now activate your rolling code equipped device.

Gate Operator/Canadian Programming

Canadian radio-frequency laws require transmitter signals to “time-out” (or quit) after several seconds of transmission – which may not be long enough for HomeLink to pick up the signal during programming. Similar to this Canadian law, some U.S. gate operators are designed to “time-out” in the same manner.

If you live in Canada or you are having difficulties programming a gate operator or garage door opener by using the “Programming” procedures, **replace “Programming HomeLink” step 2 with the following**:

- Continue to press and hold the HomeLink button while you **press and release - every two seconds** (“cycle”) your hand-held transmitter until the HomeLink indicator light changes from a slow to a rapidly blinking light. Now you may release both the HomeLink and hand-held transmitter buttons.

Proceed with “Programming” step 3 to complete.

Using HomeLink

To operate, simply press and release the programmed HomeLink button. Activation will now occur for the trained device (i.e., garage door opener, gate operator, security system, entry door lock, home/office lighting, etc.). For convenience, the hand-held transmitter of the device may also be used at any time. In the event that there are still programming difficulties or questions, contact HomeLink at: www.homelink.com.

* Option/accessory, for more information, see Introduction.

Erasing HomeLink Buttons

To erase programming from the three HomeLink buttons (individual buttons cannot be erased but can be “reprogrammed” as outlined below), follow the step noted:

1. Press and hold the two outer HomeLink buttons until the indicator light begins to flash-after 10 seconds.
2. Release both buttons. Do not hold for longer that 20 seconds.

HomeLink is now in the train (or learning) mode and can be programmed at any time beginning with “Programming” - step 1.

Reprogramming a Single HomeLink Button

To program a device to HomeLink using a HomeLink button previously trained, follow these steps:

1. Press and hold the desired HomeLink button. **DO NOT** release the button.
2. The indicator light will begin to flash after 20 seconds. Without releasing the HomeLink button, proceed with “Programming” - step 1.

For questions or comments, contact HomeLink at: www.homelink.com or 1–800–355–3515.

This device complies with FCC rules part 15 and Industry Canada (IC) RSS-210. Operation is subject to the following two conditions: (1) This device may not cause harmful interference, and (2) This device must accept any interference that may be received including interference that may cause undesired operation.

NOTE

The transmitter has been tested and complies with FCC and IC rules. Changes or modifications not expressly approved by the party responsible for compliance could void the user’s authority to operate the device.[2]

[2] The term “IC:” before the certification/registration number only signifies that Industry Canada technical specifications were met.

General information..... 82
Air vents..... 84
Electronic Climate Control 85
Air distribution..... 88

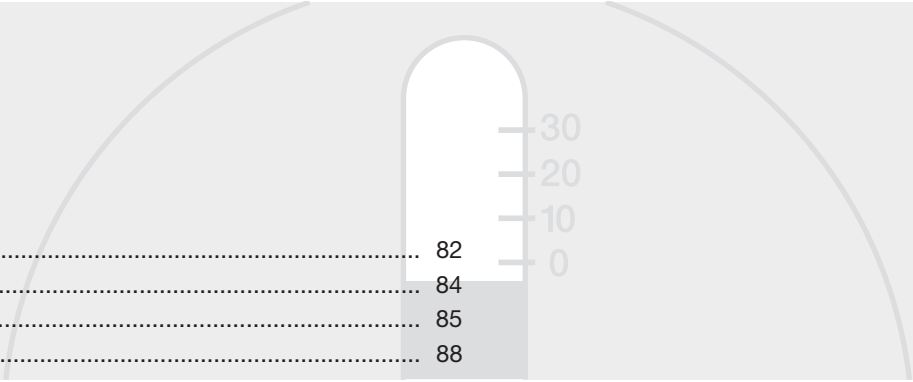

CLIMATE

03

General information

Air conditioning – A/C

Your car is equipped with a climate control system that includes either manually adjustable air conditioning or optional Electronic Climate Control (ECC).

The air conditioning system can be switched off, but for optimal air quality in the passenger compartment and to prevent the windows from fogging, the air conditioning should be left on – even in cool weather.

NOTE

In warm weather, a small amount of water may accumulate under the car when it has been parked. This water is condensation from the A/C system and is normal.

Ice and snow

Always keep the air intake grille at the base of the windshield free of snow.

Fog on the inside of the windows

The defroster function should be used to remove fog or mist from the inside of the windows. Keeping the windows clean with a commercially available window washing spray will also help prevent fogging or misting

Climate control maintenance

Special tools and equipment are required to maintain and carry out repairs on the climate system. Work of this type should only be done by a trained and qualified Volvo service technician.

Refrigerant

Volvo cares about the environment. The air conditioning system in your car contains a CFC-free refrigerant – R134a. This substance will not deplete the ozone layer. The system contains 1.2 lbs (530 g) R134a (HFC 134a), and uses PAG oil.

Passenger compartment filter

Replace the cabin air filter with a new one at the recommended intervals. Please refer to your Warranty and Service Records Information booklet, or consult a trained and qualified Volvo service technician for these intervals. The filter should be replaced more often when driving under dirty and dusty conditions. The filter cannot be cleaned and therefore should always be replaced with a new one.

NOTE

There are different types of cabin air filters. Ensure that the correct type is installed.

Display

The display above the climate control panel shows the climate settings that have been made.

Personal settings

There are two functions in the climate system that can be set to your preferences:

- Blower speed to Auto mode (models with ECC only).
- Timer controlled recirculation of the air in the passenger compartment.

General information

For information about how to make these settings, see the Personal settings section on page 75.

Air vents

Air vents in the dashboard

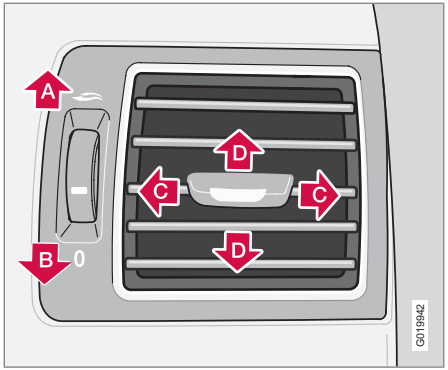

- A Open
- B Closed
- C Horizontal air flow
- D Vertical air flow

Direct the outer air vents toward the side windows to defrost.

Electronic Climate Control

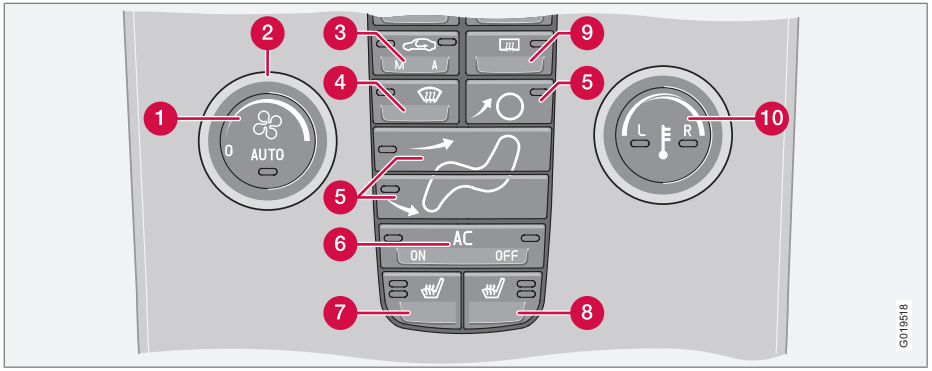

1. Auto – On/Off
2. Blower speed
3. Recirculation
4. Defroster
5. Airflow controls
6. A/C – ON/OFF
7. Heated driver's seat
8. Heated front passenger's seat
9. Rear window and door mirror defrosters
10. Temperature selector

ECC functions

1. Auto – On/Off

The **AUTO** function automatically regulates climate control to maintain the desired temperature. The automatic function controls heating, air conditioning, blower speed, recirculation, and air distribution.

If you select one or more manual functions, the remaining functions continue to be controlled automatically. All manual settings are switched off when **AUTO** is switched on. **AUTO CLIMATE** is shown in the display.

2. Blower speed

The blower speed can be increased or decreased by turning the knob. The blower speed is regulated automatically if **AUTO** is selected. The previously set blower speed is disconnected.

NOTE

If the knob is turned counterclockwise and the blower indication in the display goes out, the blower and the air conditioning are switched off. The display shows the blower symbol and **OFF**.

Electronic Climate Control

3. Recirculation

This function can be used to shut out exhaust fumes, smoke, etc from the passenger compartment. The air in the passenger compartment is then recirculated, i.e. no air from outside the car is taken into the car when this function is activated.

If the air in the car recirculates for too long, there is a risk of condensation forming on the insides of the windows, especially in winter.

Timer

The timer function minimizes the risk of fogging or stale air when the recirculation function is selected, see page 75 for information on setting the recirculation timer.

NOTE

Recirculation is always disengaged if the defroster button is engaged to clear ice or condensation from the side windows.

4. Defroster

Directs airflow to the windshield and side windows and increases blower speed. When the defroster is activated:

- Air flows to the windows at high blower speed.
- The LED in the defroster button lights up when this function is activated. The air conditioning system is controlled to provide maximum air dehumidification.
- The air conditioning is automatically switched on (can be switched off by pressing button 6).

The air is not recirculated.

5. Airflow controls

Press one of the three buttons in the illustration to activate the selected airflow. A symbol in the display above the climate control panel and a lit LED in the selected button indicate that the manual function has been selected. With manually selected airflow both warm and cool air can be selected. See also the table on page 88.

6. Air conditioning On/Off

ON: The air conditioning system is engaged when the **ON** light is lit and is controlled automatically by the system to maintain the selected temperature.

OFF: The system is disengaged when the **OFF** lights up

When **OFF** is selected and the **OFF** LED is lit, the air conditioning system is deactivated. Other functions are still controlled automatically.

When Defroster (4) is selected, the air conditioning system is activated for maximum dehumidifying.

7 and 8. Heated front seats*

Maximum heating: Press the button once – both LEDs light up.

Reduced heating: Press the button a second time – one LED lights up.

Seat heating off: Press the button a third time – no LEDs are lit.

* Option/accessory, for more information, see Introduction.

9. Rear window and door mirror defrosters

Press to defrost the rear window and door mirrors.

The rear window and door mirrors are defrosted simultaneously if the switch is pressed once. The defrost function is active if the LED in the switch is illuminated.

- The function can be switched off manually by pressing the button.
- The defrost function switches off automatically after 12–20 minutes, depending on the outside temperature.

NOTE

- On certain markets, the defrost function may remain on longer than 20 minutes in cold weather to help keep the rear window free from ice or condensation.
- This function is automatically switched off when the power retractable hard top is down.

10. Temperature selector

The temperatures on the driver's and passenger's sides can be set separately using the knob (with the thermometer in it). The temperature can be set for both sides of the car when the ignition is switched on (both LEDs will be on), which means that a temperature setting will apply to both sides of the car.

To set the temperature on one side of the car:

1. Press the knob once. The LED for one side of the car will light up. Turn the knob to adjust the temperature.
2. Press the knob a second time to set the temperature on the opposite side of the car.
3. Press the knob a third time to set the temperature on both sides of the car at the same time.

NOTE

Selecting a temperature that is higher or lower than necessary will not heat or cool the passenger compartment faster.

Sensors

- The sunlight sensor is on the upper side of the dashboard
- The passenger compartment temperature sensor is located behind the climate system control panel.
- The ambient temperature sensor is in the driver's side door mirror.
- The humidity sensor is in the rearview mirror.

These sensors should never be obstructed.

NOTE

The sunlight sensor monitors the side of the vehicle from which the sun shines into the passenger compartment. This means that the temperature may differ slightly between the left and right air vents, even if the climate system temperature is set to be the same for both sides of the passenger compartment.

Acceleration

The air conditioning system is temporarily switched off during full throttle acceleration.

Air distribution

	Air distribution	Use:		Air distribution	Use:
	Defroster. Air is not recirculated in this mode. Air conditioning is always engaged. There is also a certain amount of airflow to the panel air vents.	Defrost/de-fog the windshield and front side windows.		Air to the floor and windows. There is also a certain amount of airflow to the dashboard air vents.	For comfortable conditions and good defrosting in cold weather. Medium to high blower speed.
	Air to windshield and front side windows. There is also a certain amount of airflow to the dashboard air vents.	Prevents fogging in cold or humid weather (blower speed should be moderate to high).		Air to the floor and from the dashboard air vents.	For sunny weather with cool ambient temperatures.
	Air to the windows and from the dashboard air vents.	For good comfort in warm, dry weather.		Air to the floor. There is a certain amount of airflow to the dashboard and window air vents.	To warm the feet.
	Airflow directed to the head and chest from the dashboard air vents.	To ensure efficient cooling in a warm weather.		Airflow to the windows, dashboard air vents, and floor.	For cooler air toward the feet, or for warmer air toward the head and chest.

Front seats..... 92
Power retractable hard top 100
Interior lighting..... 106
Storage compartments..... 108
Trunk 113

G020908

INTERIOR

04

Front seats

Manual seat adjustment

The driver's and passenger's seats can be adjusted in a number of ways to provide a comfortable driving and sitting position.

1. Forward-rearward: Pull the lever up and slide the seat to the position of your choice.
2. Use this control to raise or lower the front edge of the seat cushion.
3. Use this control to raise or lower the rear edge of the seat cushion.
4. Turn this knob (optional on some passenger's seats) to adjust the firmness of the lumbar support[1].
5. Turn this knob to adjust the backrest tilt.
6. Control panel for the optional power seats.

NOTE

Both front seats are equipped with head restraints that can be adjusted vertically to suit the height of the passenger. The upper edge of the head restraint should be at least on a level with the upper-most point of the seat occupant's ear (see the section "Adjusting the front seat head restraints" on page 98).

WARNING

- Do not adjust the seat while driving.
- Adjust the driver's seat and seat belt (see page 18) before driving. The seat should be adjusted so that the brake pedal can be depressed fully.
- Position the seat as far rearward as comfort and control allow.

Accessing the rear seat

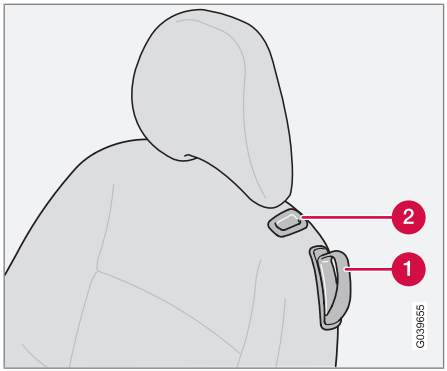

Seat access buttons (power seat shown)

1. Seat adjustment handle
2. Seat adjustment button

[1] Also applies to the optional power seat.

Manual seat

Moving the seat forward:

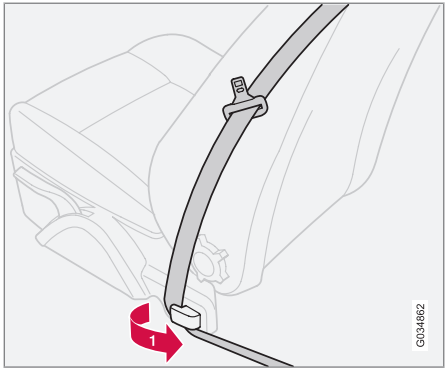

1. Remove the seat belt from its guide (see page 19).

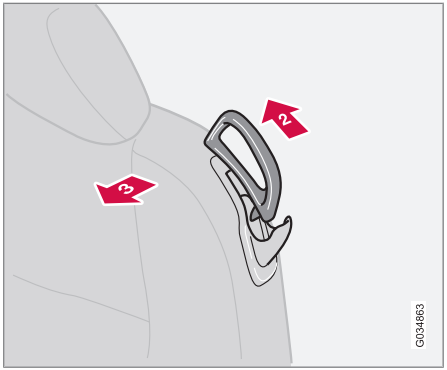

2. Pull up the handle.
3. Hold the handle up and move it forward slightly until the backrest begins to move.

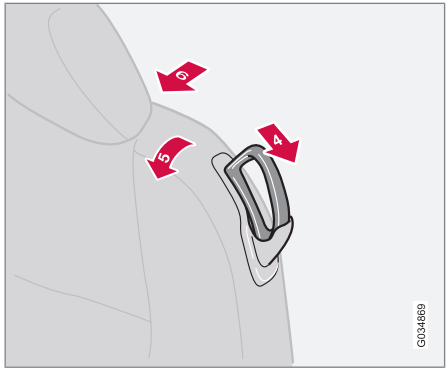

4. Press the handle down.
5. Fold the backrest forward until it locks in position.
6. Move the seat forward.

Front seats

Moving the seat rearward:

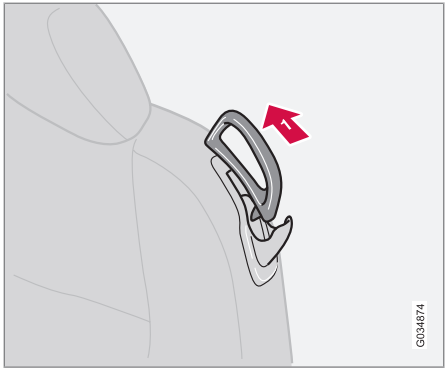

1. **With the backrest folded forward in the locked position**, slide the seat rearward until it stops/locks in its original position.
2. Pull up the handle.
3. Hold the handle up and move it rearward slightly until the backrest begins to move.

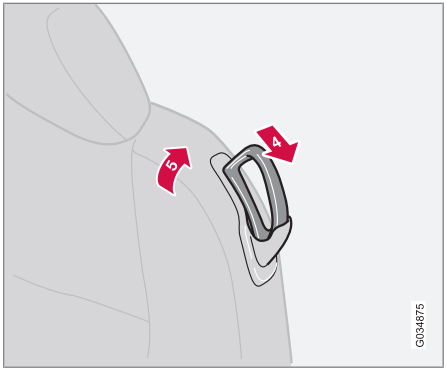

4. Press the handle down.
5. Fold up the backrest to the upright position.
   > The seat will return to the position it was in before it was moved.

6. Return the seat belt to its guide.

Seat position

If the seat does not return to its original position, reset the seat memory function as follows:

1. Sit in the seat.
2. Lift the handle (1) (see page 92) and move the seat as far rearward as possible.
3. While holding the handle up, move the seat forward to the desired position.

Power seat

Moving the seat forward:

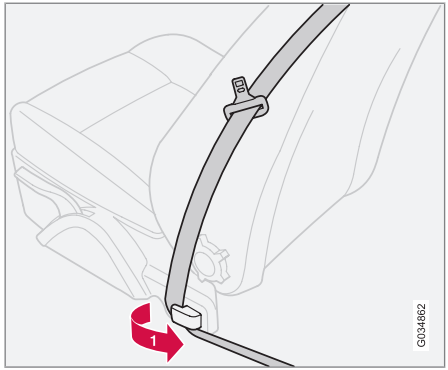

1. Remove the seat belt from its guide (see page 19).

Front seats

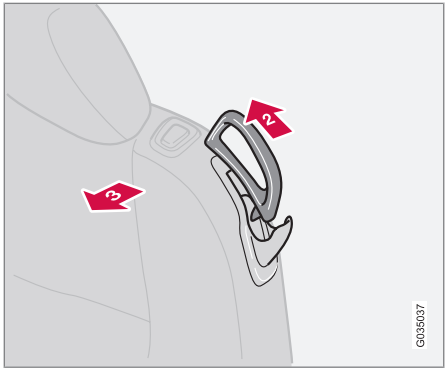

2 Pull up the handle.

3 Hold the handle up and move it forward slightly until the backrest begins to move.

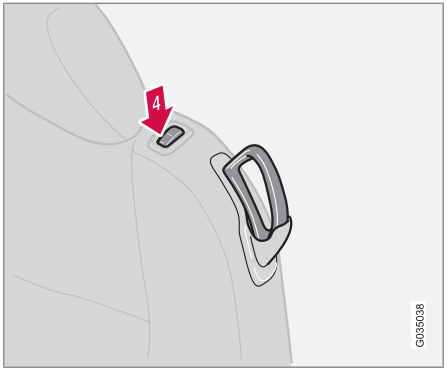

4 Press the handle down.

5 Fold the backrest forward until it locks in position.

6. Hold down the button while the seat moves forward. If the seat is in a high position, it will be lowered automatically so that the head restraint does not come in contact with the sun visor.

Moving the seat rearward:

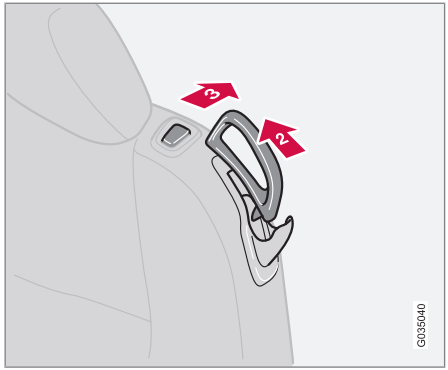

1. **With the backrest folded forward in the locked position**, press and hold down the button until the seat has returned to its original position.

2 Pull up the handle.

3 Hold the handle up and move it rearward slightly until the backrest begins to move.

Front seats

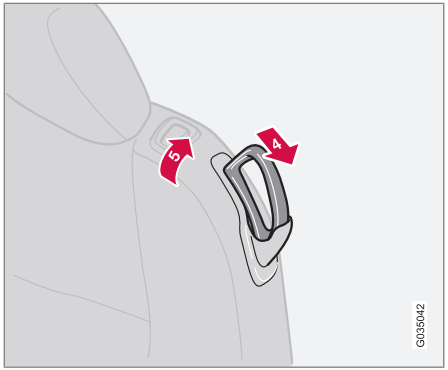

4 Press the handle down.

5 Fold up the backrest to the upright position.

> The seat will return to its original position.

6. Return the seat belt to its guide.

The front passenger's seat belt should be in its guide while the vehicle is being driven, even if the seat is not occupied.

WARNING

After the seat has been returned to its original position, be sure that the backrest is securely locked in the upright position.

Power seats*

The power driver's seat can be adjusted:

- If the ignition key is in position **I** or **II**.
- During a 10 minute period after the doors have been unlocked if the door remains open.
- If the door is closed and the ignition key is not yet in the ignition, or if the key is in position **0**, the seat can be adjusted or during a period of 40 seconds. The power passenger's seat can only be adjusted if the ignition key is in position **I** or **II**, or if the engine is running.

NOTE

Both front seats are equipped with head restraints that can be adjusted vertically to suit the height of the passenger. The upper edge of the head restraint should be at least on a level with the upper-most point of the seat occupant's ear (see the section "Adjusting the front seat head restraints" on page 98).

Adjusting the seat

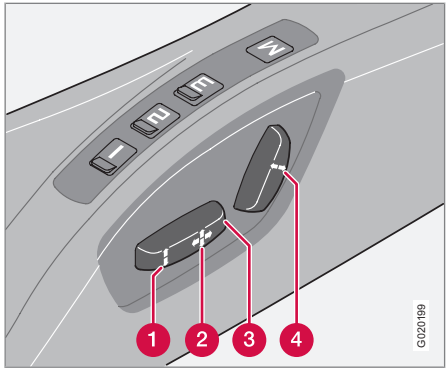

Seat adjustment controls

Seat adjustment controls 1, 2, 3, and 4 on the side of the seat can be used to move the seat to the position of your choice.

1. Move this section of the control up or down to raise/lower the front section of the seat cushion.
2. Move the control forward/rearward to move the seat forward or rearward.
3. Move this section of the control up or down to raise/lower the rear section of the seat cushion.
4. Backrest tilt.

* Option/accessory, for more information, see Introduction.

NOTE

Both front seats are equipped with head restraints that can be adjusted vertically to suit the height of the passenger. The upper edge of the head restraint should be at least on a level with the upper-most point of the seat occupant's ear (see the section "Adjusting the front seat head restraints" on page 98).

NOTE

The power seats have an overload protector that activates if a seat is blocked by any object. If this occurs, switch off the ignition (key in position **0**) and wait for approximately 20 seconds before operating the seat again.

Emergency stop

If the seat inadvertently begins to move, press any of the buttons to stop the seat.

Programming the seat memory, driver's seat only*

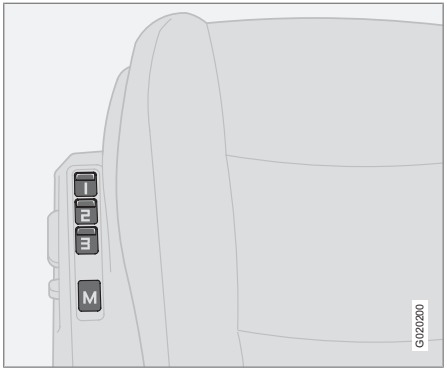

Power seat memory buttons

Three different seating positions (and the position of the door mirrors) can be stored in the seat's memory. The memory buttons are located on the outboard side of the driver's seat (see the illustration).

To program (store) a seat/mirror position in memory button **1**:

1. Adjust the seat (and door mirrors) to the desired position.
2. Press and hold down the "**M**" (Memory) button.
3. With the "**M**" button depressed, press memory button **1** to store the seat and mirrors' current position.

To move the seat and mirrors to the position that they were in when memory button **1** was programmed, press and hold down button 1 until the seat/mirrors stop moving.

As a safety precaution, the seat will stop automatically if the button is released before the seat has reached the preset position.

Central locking system remote key and driver's seat memory

The remote key transmitter can also be equipped with an optional function that controls the electrically operated driver's seat in the following way:

1. Adjust the seat/door mirrors to the desired position.
2. When you leave the car, lock it using the remote key.
3. The next time the driver's door is unlocked with the same remote key and that door is opened within 2 minutes, the driver's seat and door mirrors will automatically move to the position that they were in when the doors were most recently locked with the same remote key.

Front seats

NOTE

The memory function in the remote key operates independently the memory function in the seat.

WARNING

- Because the driver's seat can be adjusted with the ignition off, children should never be left unattended in the car.
- Movement of the seat can be STOPPED at any time by pressing any button on the power seat control panel.
- Do not adjust the seat while driving. The seat should be adjusted so that the brake pedal can be depressed fully. In addition, position the seat as far rearward as comfort and control allow.
- The seat rails on the floor must not be obstructed in any way when the seat is in motion.

Adjusting the front seat head restraints

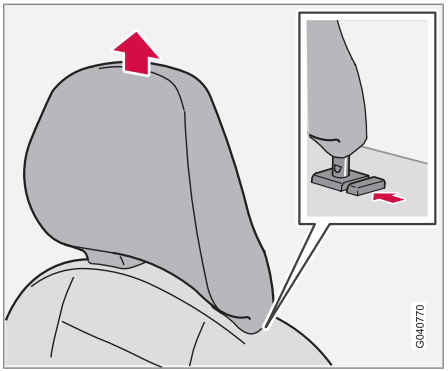

The front seat head restraints are designed so that they can be adjusted to two different height positions.

NOTE

- When the vehicle leaves the factory, the front seat head restraints will be in the lower position.
- Due to the low roofline of the Volvo C70, it is necessary to have the headrest in the lowest position and also to lower the seat height adjustment if you wish to fold down the seat's backrest.

The head restraints should be put in the upper or lower position according to the height of the occupant of the seat.

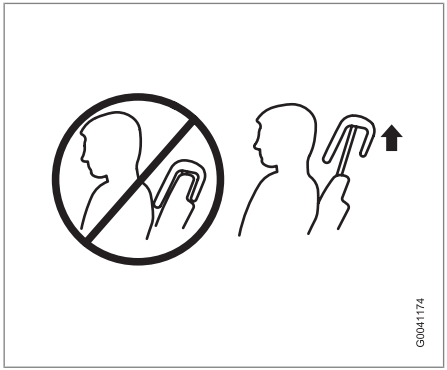

The upper edge of the head restraint should be at least on a level with the upper-most point of the seat occupant's ear (see illustration).

To raise or lower a head restraint:

Raising or lowering a head restraint

1. Release the head restraint by pressing the button underneath its left side, at the base of the support (see the illustration).
2. Move the head restraint until it clicks (locks) into the upper or lower position.

WARNING

After adjusting the head restraint, be sure that it is securely locked in the new position by pressing and/or pulling it.

Removing a head restraint

The front seat head restraints can be removed, for example, when cleaning the upholstery or if the front passenger's seat backrest is folded down to accommodate a long load. To do so:

1. Release the head restraint by pressing the release button underneath its left side, at the base of the support.
2. While holding in the release button, press the locking button at the base of the head restraint's right support with a screw driver, etc., and lift the head restraint until it can be removed completely.

WARNING

- If a front seat head restraint has been removed, it must be put properly back in place and it must lock (click) into one of the available adjustment positions before the seat is occupied.
- The front seat head restraints must be in position and properly adjusted to the height of the person sitting in the seat when the vehicle is driven and when the front passenger's seat is occupied.

Power retractable hard top

Before operating the power retractable hard top

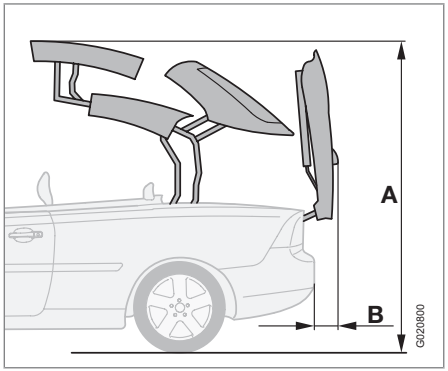

Please observe the following information before operating the power retractable hard top:

- There should be no objects on the power retractable hard top's cover.
- Remove all snow, ice or loose objects from the power retractable hard top and trunk lid.
- The top should be dry before it is lowered.

CAUTION

If the power retractable hard top is lowered while it is wet, water may drip into the passenger compartment or trunk

- There should be at least 6.5 feet (2 meters) of free space from the ground (distance A in the illustration).
- There should be at least 8 inches (20 cm) of free space behind the vehicle (distance B in the illustration in the center column).
- The ambient temperature should be above 14°F (-10°C).
- The trunk divider (see page 101) must be closed.
- The trunk must be closed.
- The vehicle must be at a standstill and the brake pedal must be pressed.

Volvo also recommends the following:

- The vehicle should be parked outdoors, on level ground.
- Raising or lowering the power retractable hard top should preferably be done in one, continuous operation.
- If the vehicle is parked outdoors, the engine should be idling to help avoid battery drain.

CAUTION

If the instructions on these pages are not followed, damage to the power retractable hard top's mechanism may occur.

WARNING

- The power retractable hard top must not be obstructed in any way when it is being operated. Always have an unobstructed view of the power retractable hard top when it is in motion. See also the decal on the trunk divider.
- Anyone near the vehicle should be well clear of the power retractable hard top's moving parts before it is operated.
- Children must never be allowed to play with the power retractable hard top control button.
- Do not leave the power retractable hard top motionless longer than necessary while it is being operated.
- Do not leave the key in the ignition if there are children in the vehicle.

Trunk divider

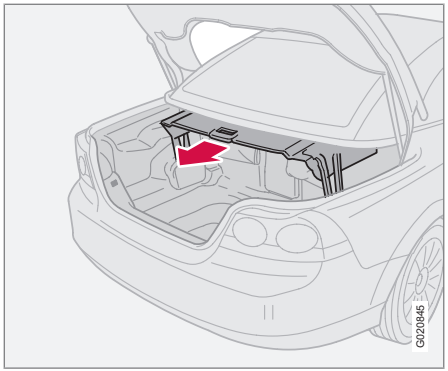

The purpose of the trunk divider is to indicate the amount of cargo that can be stowed in the trunk without affecting movement of the power retractable hard top.

1. Grasp the handle and lift.
2. Pull the trunk divider rearward.
3. Be sure to close the trunk divider completely so that it locks in place on both the right and left sides.

NOTE

If the trunk divider is not completely closed, it will not be possible to operate the power retractable hard top.

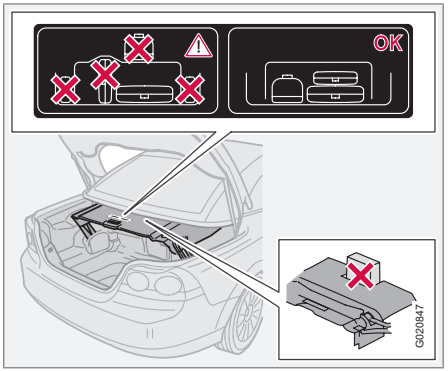

Trunk divider decal

Power retractable hard top cover

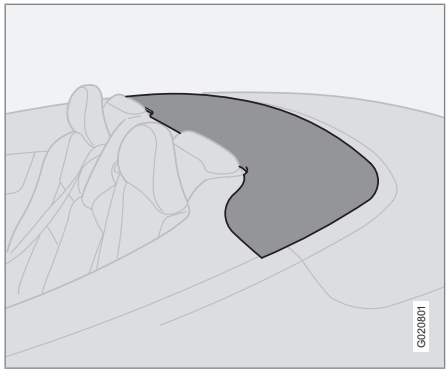

When lowered, the power retractable hard top is concealed by a cover, see the illustration.

CAUTION

Do not sit or place heavy objects on the power retractable hard top cover.

Power retractable hard top

Operating the power retractable hard top

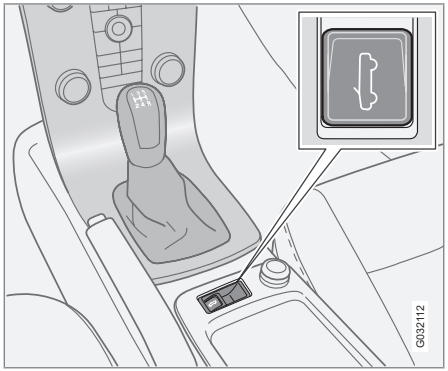

Power retractable hard top button

1. Turn the ignition key to position **II** or start the engine if the vehicle is parked outdoors.
2. Press the brake pedal.
3. **Opening the hard top**: Press and hold down the button. Release the button when an audible signal sounds and the message **TOP FULLY DOWN** is displayed.

   Closing the hard top: Pull up and hold the button to raise the hard top. Release the button when an audible signal sounds and the message **TOP FULLY UP** is displayed.

CAUTION

- Please heed any messages that may appear in the information display while the top is in operation.
- Any windows that are closed will be opened approximately 4 inches (10 cm) while the power retractable hard top is in operation. The windows will be automatically re-closed when the top is completely raised or lowered.

WARNING

- See the section “Before operating the power retractable hard top” on page 100 before operating the power retractable hard top.

Never pull the release wire for the power retractable hard top’s hydraulic system that is located under the rear seat cushion. This wire is only intended for use by qualified service personnel. Pulling this wire could lead to:

- A high risk of being injured by the power retractable hard top mechanism.
- Unexpected movement of the hard top, or the hard top or the trunk could inadvertently open.
- The retractable hard top can be damaged.

Power retractable hard top-related text messages

- **PRESS BRAKE TO OPERATE TOP** Press the brake pedal to operate the retractable hard top.
- **CLOSE TRUNK TO OPERATE TOP** The trunk is open and must be closed before operating the power retractable hard top.
- **TRUNK DIVIDER IS NOT CLOSED** The trunk divider (see page 101 for more information) must be closed before operating the power retractable hard top.
- **TOP INOPERATIVE LOW BATTERY** The battery's charge is too low to operate the power retractable hard top. In this case, the top can only be raised. Start the engine, or if necessary, have the battery charged before operating the top.
- **TOP IS UNLOCKED** The power retractable hard top is not fully up or down. Press/pull and hold the button again to complete the operation.
- **TOO HOT OR COLD TO OPERATE TOP** The power retractable hard top mechanism has overheated, or the ambient temperature is below 14° F (-10° C). If the mechanism has overheated, wait for approximately 5 minutes (the message in the information display will disappear) and try to lower or raise the top again.

If a fault in the power retractable hard top mechanism occurs, the following messages will be displayed:

- **TOP MALFUNCTION SERVICE REQUIRED** The power retractable hard top cannot be operated. Contact an authorized Volvo retailer or service technician. If the top is down in this situation, a cover for the vehicle is provided in the trunk. see page 100 for more information.
- **TOP MALFUNCTION SEE MANUAL** The power retractable hard top must be operated according to the following instructions.

Emergency operation

If the message **TOP MALFUNCTION SEE MANUAL** is displayed, the power retractable hard top cannot be operated in the normal way.

NOTE

If a fault has occurred and the power retractable hard top has been raised, it cannot be lowered again until the fault has been corrected.

CAUTION

Carefully read the information under “Before operating the power retractable hard top” (see page 100) before operating the power retractable hard top. Damage may be unavoidable if the power retractable hard top must be operated under such conditions.

1. Press or pull the hard top control button (see page 102) until **ROOF FAILURE SEE MANUAL** is displayed.
2. Release the button.
3. Pull the button again and hold it. After approximately 5 seconds, the power retractable hard top will begin to move. Hold the button up until the top is fully raised.

NOTE

Movement of the top may stop briefly. However, the button should be pulled up throughout the entire operation. An audible signal will sound during the entire operation.

WARNING

Never pull the release wire for the power retractable hard top’s hydraulic system that is located under the rear seat cushion. This wire is only intended for use by qualified service personnel. Pulling this wire could lead to:

- High risk of being injured by the power retractable hard top’s opening/closing mechanism.
- Unexpected movement of the hard top/the hard top or the trunk could inadvertently open.
- The retractable hard top can be damaged.

Power retractable hard top

Temporary cover

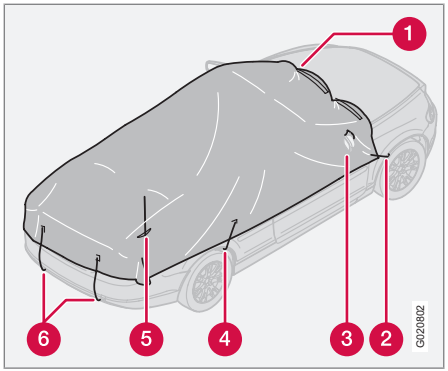

Covering the vehicle

1. Fold under windshield wipers
2. Attachment at front wheel housings
3. Door mirror opening
4. Attachment at rear wheel housings
5. Antenna opening
6. Attachment at rear bumper

The cover should only be used if the power retractable hard top is down and cannot be raised. It should be placed over the car so that the shock-cord attaching points are on the underside.

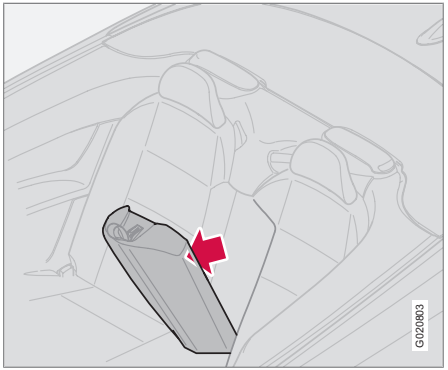

Location of the cover

To install the cover:

1. Raise all windows.
2. Take out the cover (stowed in the compartment in the rear side of the ski hatch in the center of the rear seat backrest), remove it from the bag and unfold it.
3. Slide the cover under the windshield wipers so that there is one fold under each wiper blade (1).
4. Attach the front shock-cord hooks (2) on the edges of the front wheel housings.
5. Slide the openings in the cover (3) over the respective door mirrors.
6. Attach the rear side hooks (4) on the edges of the rear wheel housings.
7. Guide the antenna through opening 5.
8. Attach the hooks (6) under the rear bumper.

Wind blocker (retailer installed accessory)

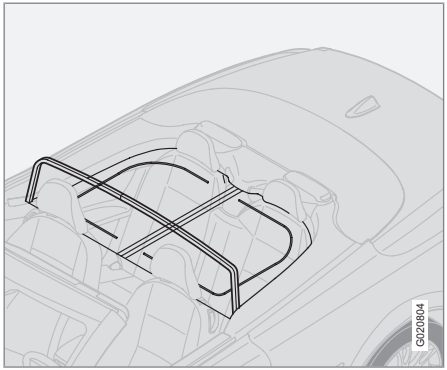

Wind blocker

The wind blocker is intended for use while driving with the power retractable hard top down to help reduce swirling breezes in the passenger compartment.

Installing the wind blocker

1. Unfold the wind blocker to its full width.
2. Unfold the supports on both rear sides.
3. Slide the winder blocker's rear supports under the rear head restraints so that they rest on the upper edge of the backrest.
4. Press the side lock tabs into the holes in the side panels until they click into place.
5. Raise the wind blocker.

The zipper in the wind blocker can be opened to place or access objects in the rear seat.

CAUTION

Slide in the supports carefully to avoid damaging the upholstery.

WARNING

- Make sure the wind blocker is securely attached. An improperly secured wind blocker may cause injury to occupants of the vehicle or to other motorists.
- No one should be allowed to sit in the rear seat when the wind blocker is in place.

When not in use, the wind blocker should be stored in its bag, in the trunk, against the rear seat backrest.

Interior lighting

Interior lighting

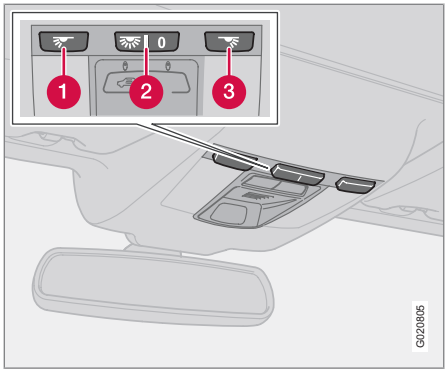

Front courtesy lights and reading lights

1. Front driver's side reading light, on/off
2. Courtesy lighting
3. Front passenger's side reading light, on/off

The front seat reading lights can be switched on and off by pressing buttons (1) or (3) when the ignition key is position **I** or **II**, or when the engine is running.

The courtesy lighting (2) can be set to three positions:

– Press the left side of the button: the interior courtesy lighting turns on.

– Neutral position: the interior courtesy lighting comes on when a door is opened, and is switched off 10 seconds after the door is closed.

– Press the right side of the button: the interior courtesy lighting stays off.

Courtesy lighting – automatic function

The interior lighting has a built-in automatic function that switches on the courtesy lighting for 30 seconds when:

- the car is unlocked from the outside using the key blade or remote key
- the engine is switched off and the ignition key is turned to the **0** position.

The courtesy lighting lights up or remains on for 5 minutes when:

- one of the doors is opened and left open.
- the courtesy lighting has not been switched off (the right side of button 2 depressed).

The automatic lighting goes out when:

- the engine is started
- the car is locked from the outside using the key blade or remote key.

If the courtesy lighting is not switched off manually, it will be turned off automatically 5 minutes after the engine has been switched off.

Footwell lighting

The footwell (and courtesy lighting) comes on or goes off when one of the side doors is opened or closed.

Rear reading lights

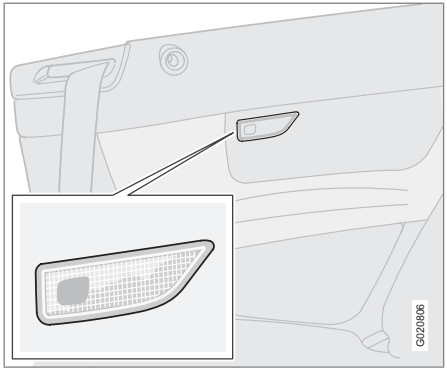

Rear reading lights

The rear reading lights can be switched on or off by pressing the respective buttons, and function if the ignition key is in positions **I**, **II**, or if the engine is running.

The courtesy lighting can be switched on or off within 30 minutes after the engine has been

switched off, or after a door has been opened or closed.

These lights switch off automatically 5 minutes after the engine has been switched off.

Vanity mirror

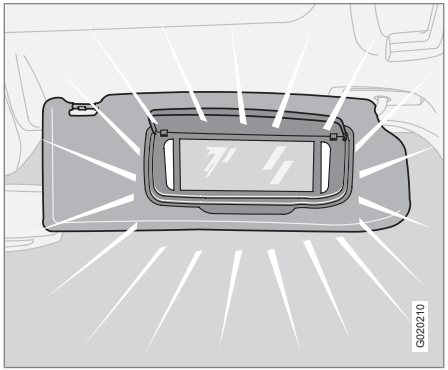

Raise the cover to switch on the light.

Storage compartments

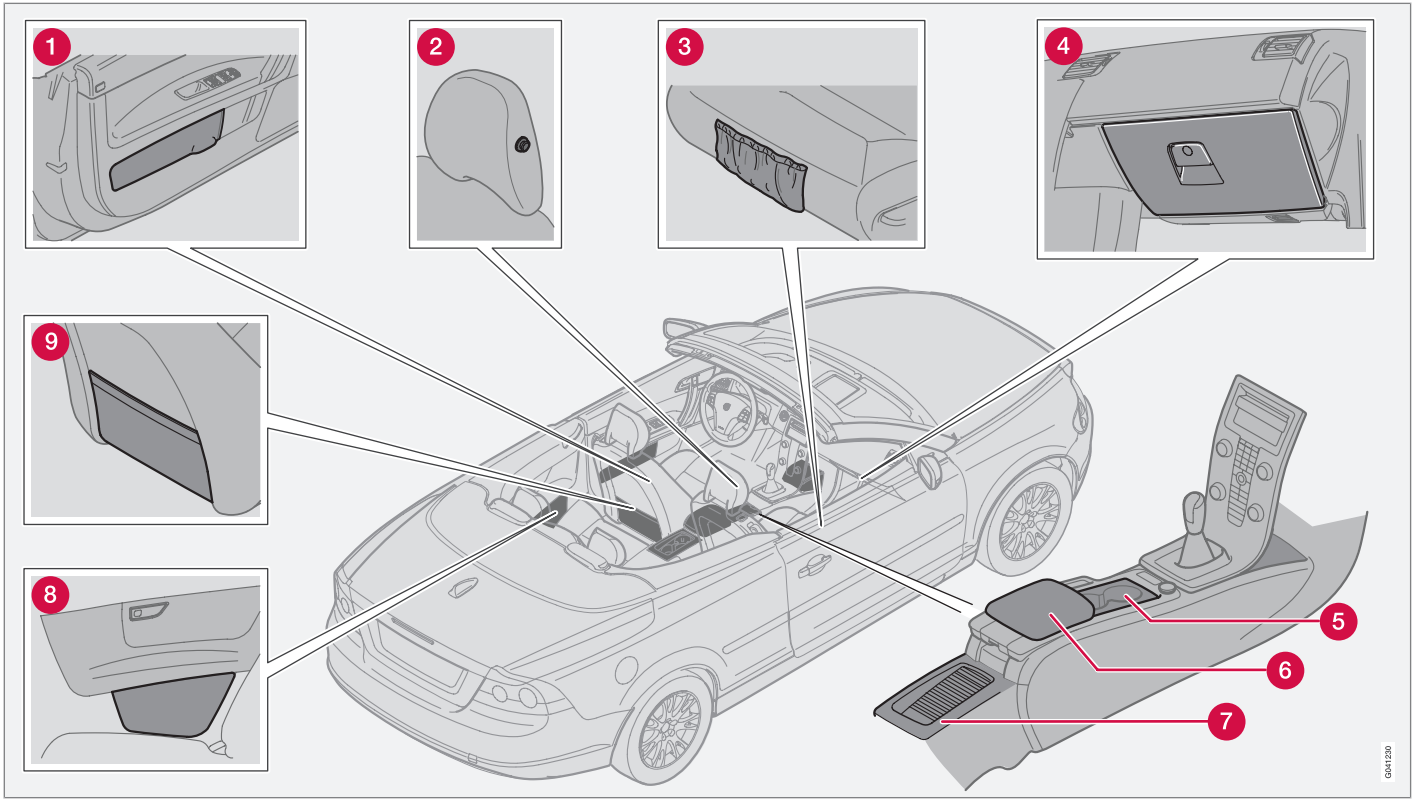

1. Lockable storage compartment in door
2. Jacket hanger (intended for light garments only)
3. Storage pocket on front side of front seat cushion
4. Glove compartment
5. Cup holders
6. Storage compartment for e.g., CDs
7. Cup holders for rear seat passengers
8. Storage compartments in rear side panels
9. Storage compartment on rear side of front seat backrests.

WARNING

- Anchor any heavy objects to prevent them from moving during sudden stops.
- Packages on the rear parcel shelf can obscure vision and may become dangerous projectiles in the event of a sudden stop or an accident.

Glove compartment

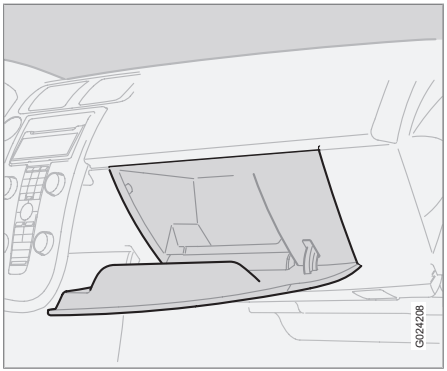

The owners manual and maps can be stored here. There are also holders for coins, pens and fuel cards. The glove compartment can only be locked and unlocked using the detachable key blade from the central locking system's remote key. See page 120 for information on removing the key blade from the remote key, and page 129 for information about locking the glove compartment.

Jacket hanger

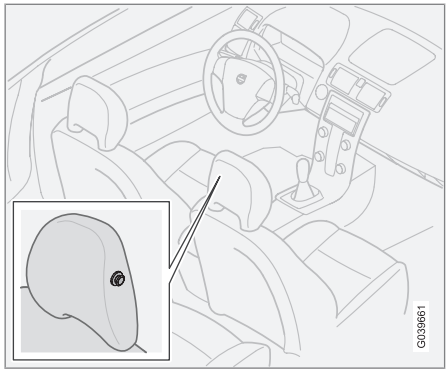

The jacket hanger is located on the inboard side of the front passenger's seat head restraint. It is only intended for hanging light garments.

Storage compartments

Compartment in door panel

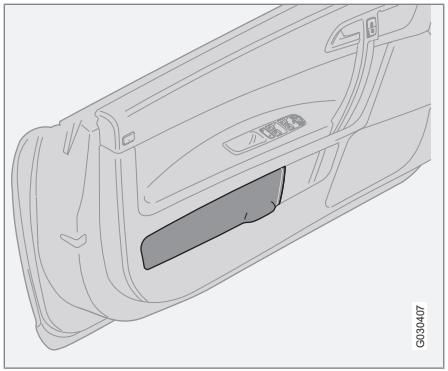

Open the compartment by lifting the front lower section of the lid.

Locking function
The door panel compartments can be locked by pressing the Lock button on the central locking system's remote key.

Rear seat storage compartment

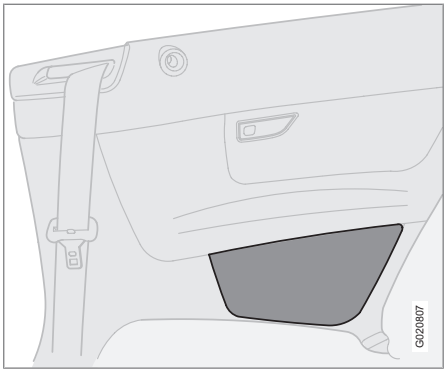

To open, press on the **top center** of the panel. Both the forward and rearward catches should release and the panel should spring open. If one side does not open, press again directly over that catch.

CAUTION

Never pull the panel; the catches may be damaged.

- Press to close and latch the panel.

Storage under the front, center armrest

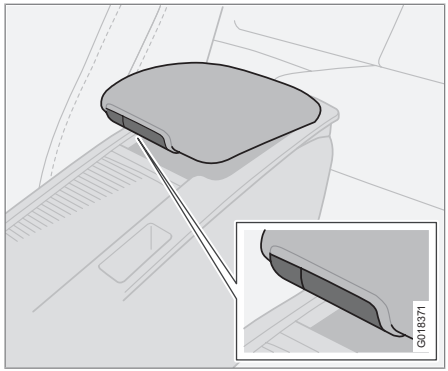

There are two storage compartments under the front, center armrest.

- Press the smaller button on the front edge of the armrest and lift the armrest cover to access a shallow storage compartment.
- Press the larger button and lift the entire armrest to access a deeper compartment.

CD storage

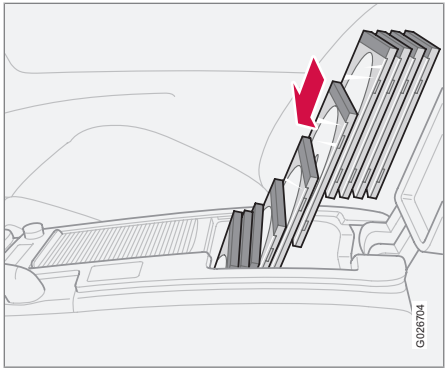

The deep storage compartment has room for 10 CD jewel cases. These cases must be inserted with their spines upward in order to allow space for 10 cases in the storage compartment

Cup holders in the center console

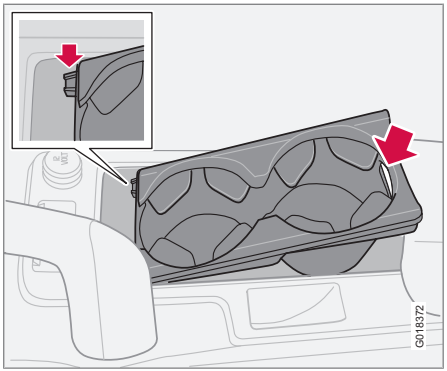

Two cup holders are located under the sliding cover in the center console.

The cup holders can be lifted out if necessary. To do so, grasp the indentation on the rear edge of the cup holder and lift.

To put the cup holder back in place:

1. Slide the two locating tabs in the front side of the cup holder into the two corresponding recesses in the center console storage space.
2. Press down the rear edge of the cup holder.

To close the sliding cover, grasp the underside of the front edge and pull.

Rear cup holders

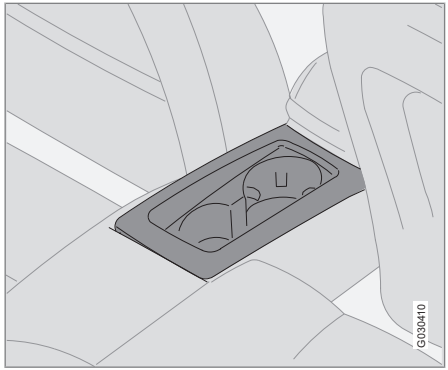

Storage compartments

Storage compartment behind the parking brake

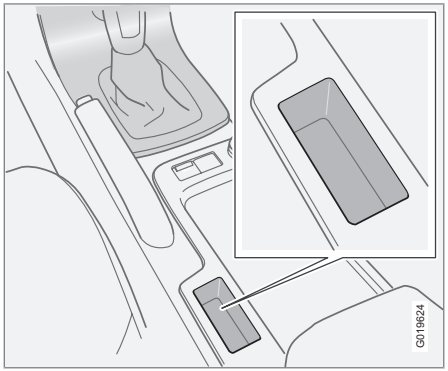

If the buttons for optional equipment are not installed, the recess behind the parking brake can be used as a storage compartment for coins, etc.

WARNING

Objects placed in this compartment should not interfere with the hand brake lever when it is in the lifted (hand brake applied) position.

Loading the trunk

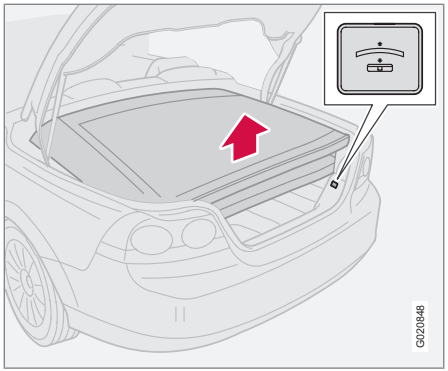

Button for changing level of folded power retractable hard top

Loading the trunk with the power retractable hard top down

When the power retractable hard top is down, it is folded in the trunk. Using the button shown in the illustration above, the folded power retractable hard top can be moved up or down slightly to facilitate loading or unloading small objects.

NOTE

This movement is part of the normal power retractable hard top operation, which means that messages pertaining to the power retractable hard top's operation (see page 102) also apply to the this function.

WARNING

Anyone near the vehicle should be well clear of the power retractable hard top's moving parts before it is operated.

CAUTION

- Any objects that impede the movement of the power retractable hard top may damage the top or its mechanism.
- When the power retractable hard top has been raised for loading the trunk, or if its movement has been interrupted by pressing the button twice, the trunk should not be closed. Doing so can damage the system or cause paint damage.

To raise the level of the folded power retractable hard top:

1. Open the trunk.
2. Press the button on the right side of the trunk opening.

NOTE

There may be a delay of several seconds before the folded power retractable hard top begins to move.

Movement of the top can be stopped by pressing the button again.

3. The folded power retractable hard top will raise slightly. If an audible signal sounds during this operation, check the information display in the center instrument panel for messages.
4. Lift the trunk divider (see page 101) to provide an opening into the trunk.
5. When the objects to be loaded have been placed in the trunk, press down the trunk divider.
6. Press the button to move the power retractable hard top downward. Movement of the top can be stopped by pressing the button again.
7. Close the trunk.

Trunk

NOTE

The trunk cannot be closed while the folded power retractable hard top is in the upper position.

Raising and lowering the folded top in the event of a fault

If the message **ROOF FAILURE SEE MANUAL** is displayed, the folded power retractable hard top can only be lowered in the trunk.

CAUTION

Damage may be unavoidable if the power retractable hard top must be operated when this message is displayed.

Press the button again and hold it down. After approximately 2 seconds, the power retractable hard top will begin to move. Keep the button depressed until the folded top is lowered.

An audible signal will sound during this entire operation.

Load anchoring eyelets

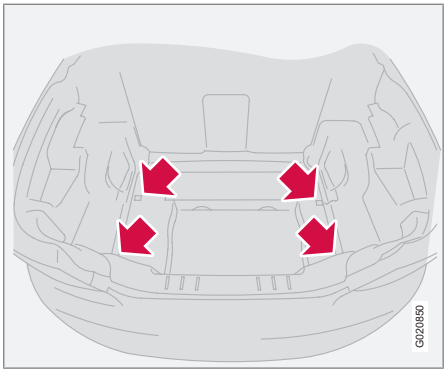

The eyelets in the trunk can be used to fasten accessory load and lashing straps, load nets, and other load anchors.

12-volt socket in trunk*

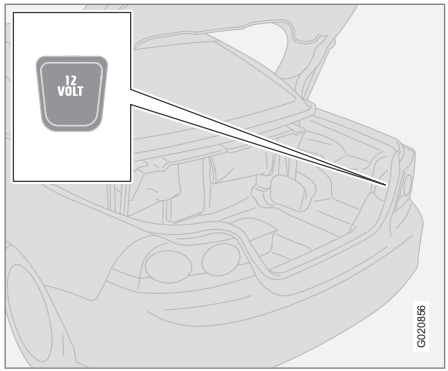

Fold down the lid to use the socket.

- Using the 12-volt socket while the engine is not running drains the vehicle's battery.
- If the ignition is switched off and a device drawing more that 0.1A is connected to a socket, a battery alert will be shown in the driver information display.
- The cover should be kept on when the auxiliary socket is not in use.

* Option/accessory, for more information, see Introduction.

Carrying long loads (ski hatch)

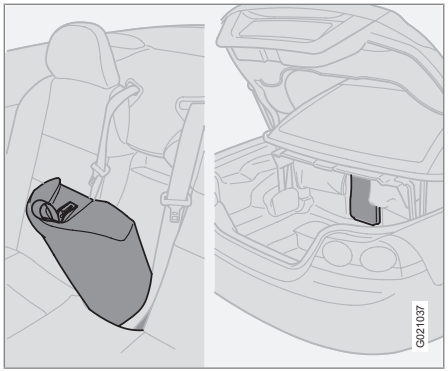

Ski hatch

The center section of the rear seat backrest can be opened to create space for carrying long, light objects (max. length 6.5 ft/2 meters, max. weight 55 lbs/25 kg). To do so, the center section (cushion) of the rear seat backrest must be removed, the tire repair kit (if the vehicle is so equipped) must be removed and stowed in the trunk, and the plastic hatch in the trunk must be opened.

Removing the center backrest cushion

Pull the strap at the upper edge of the cushion, pull it forward, and lift it out.

Opening the plastic hatch

From the trunk, press the catches in the two holes in the hatch toward each other to release the hatch, and fold it down.

NOTE

If the vehicle is equipped with the optional ski bag, the bag's zipper must be opened from the passenger's compartment in order to insert objects through the ski hatch.

Replacing the backrest cushion

Begin by guiding the lower section of the cushion into place. Then press the upper section of the cushion into place.

NOTE

This cushion is locked in place when the vehicle is locked with the remote control.

Securing long objects

Long objects should be secured with one of the rear seat belts.

Wrap the belt once around the object and lock the belt in the retractor as usual. If the vehicle is equipped with the optional ski bag, pass the seat belt through the bag's handle before fastening the seat belt.

Remote key and key blade..... 118
Valet locking 122
Keyless drive*..... 124
Locking and unlocking..... 128
Alarm*..... 130

* Option/accessory, for more information, see Introduction.

LOCKS AND ALARM

05

Remote key and key blade

Remote keys

Two remote keys that also function as ignition keys are provided with your car. The remote keys contain detachable metal key blades for manually locking or unlocking the driver's door and the glove compartment.

USA – FCC ID: LTQVO315TX

This device complies with part 15 of the FCC rules. Operation is subject to the following conditions: (1) This device may not cause harmful interference, and (2) this device must accept any interference received, including interference that may cause undesired operation.

Canada – IC: 3659AVO315TX

Operation is subject to the following conditions: (1) this device may not cause interference, and (2) this device must accept any interference, including interference that may cause undesired operation of the device.

Loss of a remote key

If either of the remote keys is lost, the other must be taken with the car to a Volvo retailer. As an anti-theft measure, the code of the lost remote key must be erased from the system.

Each key blade has a unique code, which is used if new key blades are required. A maximum of six remote keys/key blades can be programmed and used for one car.

Immobilizer (start inhibitor)

Each of the keys supplied with your car contains a coded transponder. The code in the key is transmitted to an antenna in the ignition switch where it is compared to the code stored in the start inhibitor module. The car will start only with a properly coded key. If you misplace a key, take the other keys to an authorized Volvo retailer for reprogramming as an antitheft measure.

CAUTION

Never use force on the narrow section of the remote key – this is where the transponder is located. The car cannot be started if the transponder is damaged.

USA – FCC ID: LTQWFS 125VO

This device complies with part 15 of the FCC rules. Operation is subject to the following condition: (1) This device may not cause harmful interference, and (2) this device must accept any interference received, including interference that may cause undesired operation.

Canada – IC: 3659A-WFS125VO

Operation is subject to the following conditions: (1) this device may not cause interference, and (2) this device must accept any interference, including interference that may cause undesired operation of the device.

Remote key functions

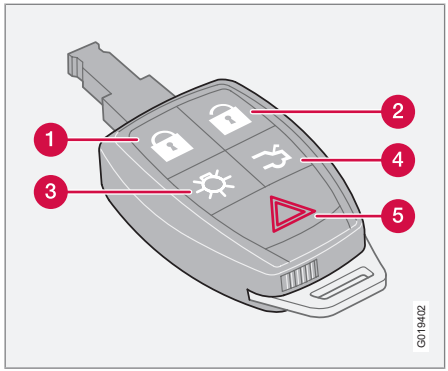

1 **Lock** – Press the Lock button on the remote once to lock all doors and the trunk. The turn signals will flash once to confirm locking.

NOTE

The car can also be locked if a door is open (does not apply to vehicles with the optional keyless drive).

2 **Unlock** – Press the Unlock button on the remote once to unlock the driver's door. After a short pause, press the Unlock button a second time within 10 seconds to unlock the other doors and the trunk. A long press (at least several seconds) opens all side windows.

NOTE

- The turn signals flash to confirm that the vehicle has been correctly locked/unlocked with the remote key or the optional keyless drive. When locking the vehicle, the turn signals will flash a confirmation only if all the doors are securely closed and locked. Flashing confirmation for locking and unlocking may be customized in the vehicle's Personal settings menu, see page 75 for more information.
- The two-step unlocking function can be changed so that one press of the Unlock button unlocks all of the doors and the trunk. See Personal settings page 75 for more information.

- **Automatic relocking:** If the doors are unlocked, the locks will automatically reengage (re-lock) and the alarm will rearm after 2 minutes unless a door or the trunk has been opened.
- **Automatic locking:** When the car starts to move, the doors and trunk can be locked automatically. This feature can be turned on or off, see Personal settings on page 75 for more information.
- Airbag deployment will automatically attempt to unlock the doors.

3 **Approach lighting** – As you approach the car: Press the button on the remote key to illuminate the area around the car in dark conditions. Pressing the button once lights up the interior lighting, parking lights, and license plate lighting. These lights will switch off automatically after 30, 60 or 90 seconds. See the Personal settings page 75 for information about adjusting the time setting.

4 **Unlock trunk** – Press the button once to disarm the alarm system and unlock only the trunk. After closing, the trunk will not automatically relock. Press Lock to relock it and rearm the alarm.

NOTE

This function will unlock, but not pop open, the trunk.

5 **Panic alarm** – This button can be used to attract attention during emergency situations. To activate the panic alarm, press and hold the red button for at least 3 seconds or press it twice within 3 seconds. The turn signals and horn will be activated. The panic alarm will stop automatically after 30 seconds. To deactivate, wait approximately 5 seconds and press the red button again.

NOTE

This button will NOT unlock the car.

Weak battery in the remote key

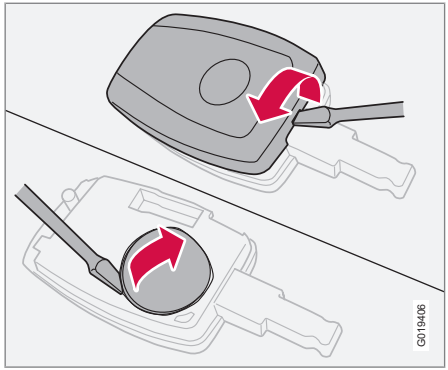

Remote key and key blade

When the battery begins to lose its charge, the Information symbol in the instrument panel (see page 51) lights up and **KEY BATTERY LOW VOLTAGE** is shown in the information display.

Replacing the battery in the remote key

If the range of the transmitter is noticeably reduced, this indicates that the battery (type CR 2450, 3V) is weak and should be replaced. To replace the battery:

1. Place the remote key with the keypad downward. Pry open the cover with a small slotted screwdriver.
2. Remove the cover.

CAUTION

When replacing the battery, avoid touching the electrical circuitry in the other half of the remote key.

3. Note how the + and – sides of the battery are positioned on the inside of the cover (see the underside of the cover).
4. Pry out and replace the battery. Avoid touching the battery and its contact surfaces with your fingers.
5. Press the cover back into place.

The old battery should be disposed of properly at a recycling center or by a trained and qualified Volvo service technician.

Key blade

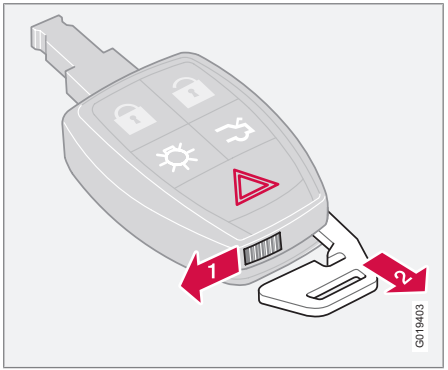

Removing the key blade

The key blade can be removed from the remote key. When removed, it can be used as follows:

- To lock/unlock the driver's door
- To lock/unlock the glove compartment, see page 129.
- To open the trunk mechanically, see page 129.
- For valet locking (see page 122)

Removing the key blade

1. Slide the spring loaded catch to the side.
2. While holding the catch, pull the key blade out of the remote key.

Reinserting the key blade in the remote key

1. Hold the remote key with the pointed end down.
2. Carefully slide the key blade into its groove.
3. Gently press the key blade in the groove until it clicks into place.

Unlocking the doors with the detached key blade

1. Insert the key blade as far as possible in the driver's door lock.
2. Turn the key blade clockwise approximately one-quarter turn to unlock the driver's door only.

NOTE

After unlocking the driver's door with the key blade, opening the door will trigger the alarm.

To disable the alarm

Press the Unlock button on the remote key, or insert the key in the ignition switch.

Locking the doors with the detached key blade

1. Lock the other door(s) by pressing the lock button on each door. Please note that this does not arm the alarm or lock the trunk.
2. Turn the key blade one-quarter turn counter-clockwise to lock the driver's door.

Valet locking

Locking points

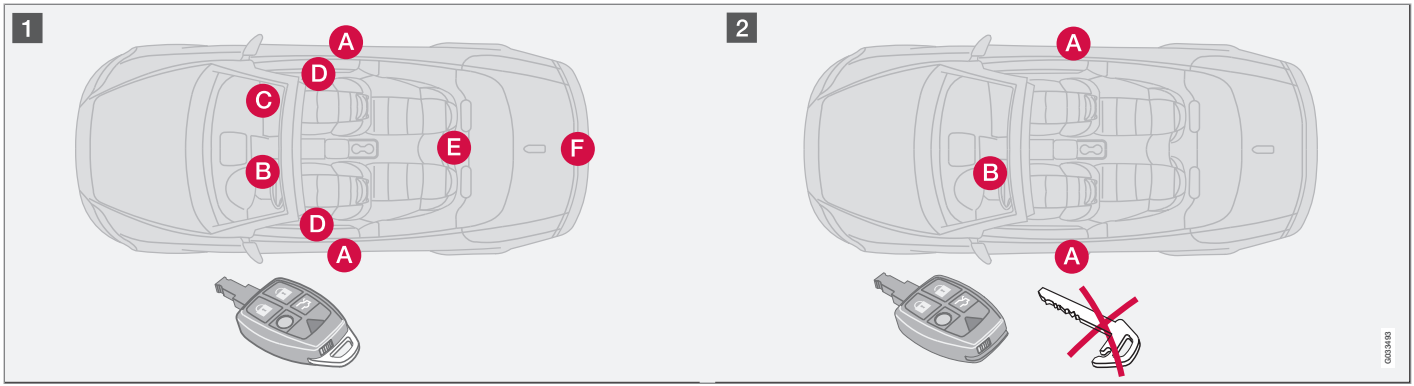

1 Normal locking/unlocking points for the remote key with the key blade in place (valet locking not activated):

- A Doors
- B Steering wheel lock
- C Glove compartment
- D Compartments in door panels
- E Ski hatch
- F Trunk

2 Locking/unlocking points for the remote key with the key blade removed (valet locking activated):

- A Doors
- B Steering wheel lock

By utilizing the remote key with the key blade removed, the valet locking feature enables you to block access to the trunk and glove compartment, door panel compartments and the ski hatch for e.g., valet parking or when the car is brought to the retailer for service.

Valet locking

Activating the valet locking function

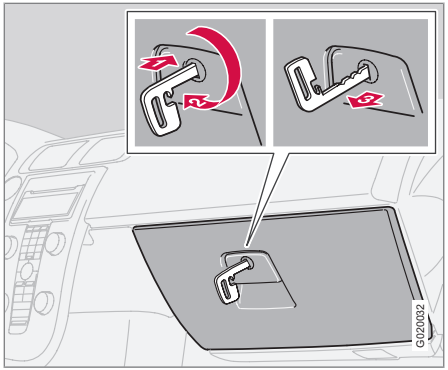

Begin by removing the key blade from the remote key (see page 120).

NOTE

The first stages of opening the power retractable hard top offer temporary access to the contents of the trunk. Therefore, before activating valet locking, the power retractable hard top must be up and the trunk divider (see page 101) must be open. This makes it impossible to operate the power retractable hard top.

1. Insert the key in the glove compartment lock.
2. Turn the key blade 180° clockwise to lock the glove compartment and to lock points C, D, E, and F and disconnect these points from the central locking system (a message appears in the information display).
3. Remove the key blade from the glove compartment lock.

Give the parking attendant or service personnel only the remote key (with the key blade removed).

Deactivating the valet locking function

Turn the key blade 180° counterclockwise in the glove compartment lock to deactivate valet locking (the trunk can then be unlocked using the remote key).

For information on locking/unlocking the glove compartment normally, see page 128

Keyless drive*

Keyless locking and unlocking

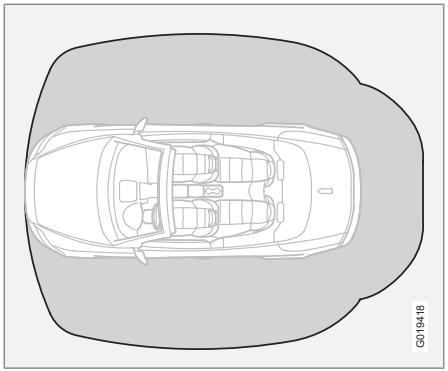

Range of the keyless drive remote key–5 ft (1.5 meters)

This system makes it possible to unlock and lock the vehicle without having to use the remote key. It is only necessary to have a keyless drive remote key in your possession to operate the central locking system.

NOTE

The buttons on the keyless drive remote key can also be used to lock and unlock the vehicle, see page 118 for more information.

Both of the remote keys provided with the vehicle have the keyless function, and additional remotes can be ordered. The system can accommodate up to six keyless drive remote keys.

NOTE

The number of doors that are unlocked at the same time can be set in the Personal settings menu, see page 75 for additional information.

Unlocking the vehicle

- A keyless drive remote key must be on the same side of the vehicle as the door to be opened, and be within 5 feet (1.5 meters) of the lock or the trunk opening control (see the shaded areas in the illustration).
- Pull a door handle to unlock and open the door or press the trunk opening control.
- See page 145 for information on starting a vehicle equipped with keyless drive.

Locking the vehicle

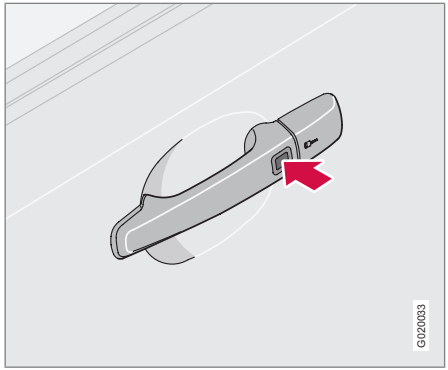

Keyless drive lock button

The doors and the trunk can be locked by pressing the lock button in any of the outside door handles.

NOTE

- If one or more doors and/or the trunk is not fully closed when the lock button is pressed, the door(s) or trunk will not be locked.
- On keyless drive vehicles with an automatic transmission, the gear selector must be in the Park (**P**) position and the ignition must be switched off before the doors/trunk can be locked.

* Option/accessory, for more information, see Introduction.

Locking or unlocking the vehicle with the key blade

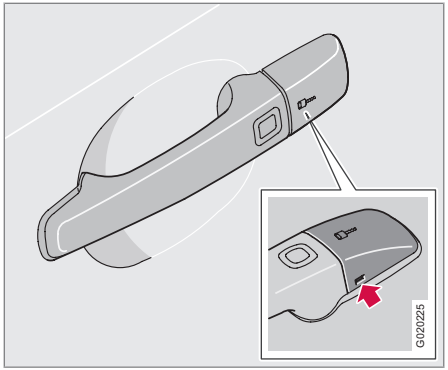

Keyless drive keyhole cover

The driver's door on vehicles equipped with keyless drive can be locked or unlocked with the remote key's detachable key blade if necessary, see page 119 for information on removing the key blade from the remote key. To access the keyhole in the driver's door:

- Pry off the keyhole cover by inserting the key blade or a small screwdriver in the hole on the underside of the cover (indicated by the arrow in the inset illustration).
- Insert the key blade as far as possible in the driver's door lock. Turn the key blade clockwise approximately one-quarter turn to unlock the driver's door only. This will trigger the alarm.
- **To disable the alarm:** Press the Unlock button on the keyless drive remote key. If the batteries in the remote are weak, remove the keyless drive start control from the ignition switch by pressing the catch (see the illustration on page 145) and pulling the control out of the ignition switch. Insert the ignition key section of a keyless drive remote key in the ignition switch.

Keyless drive remote key and driver's seat memory

This function is only available on vehicles equipped with the optional power driver's seat.

- When you leave the car with a keyless drive remote key in your possession and lock any door, the position of the driver's seat will be stored in the seat's memory.
- The next time a door is opened by a person with the same remote key in his/her possession, the driver's seat will automatically move to the position that it was in when the door was most recently locked.

NOTE

If several people carrying keyless drive remote keys approach the vehicle at the same time, the driver's seat will assume the position it was in for the person who opens a door first.

Keyless drive information messages

If anyone leaves the vehicle with the only keyless drive remote key in his or her possession while the ignition is switched on, a message will be shown in the information display and an audible signal will sound.

NOTE

This message will only be displayed if the start control is in position **I** or **II**.

The message will be erased from the display and the audible signal will stop when the remote key has been returned to the vehicle and one of the following has occurred:

- A door has been opened and closed
- The start control has been turned to position **0**
- The **READ** button (see page 56 for the location of this button) has been pressed.

Keyless drive*

CAUTION

- Keyless drive remote keys should never be left in the vehicle. In the event of a break-in, a remote found in the vehicle could make it possible to start the engine.
- Electromagnetic fields or metal obstructions can interfere with the keyless drive system. Avoid placing the remote key near cellular phones, metallic objects or e.g., in a metal briefcase.

Canada – IC:267T- 5WK48952,

267T- 5WK48964, 267T-5WK48891
NOTE

This device complies with RSS -210 of Industry Canada. Operation is subject to the following two conditions: (1) This device may not cause harmful interference, and (2) this device must accept interference received, including interference that may cause undesired operation.

CAUTION

Changes or modifications not expressly approved by the manufacturer could void the user's authority to operate the equipment.

USA – FCC ID:KR55WK48952,

KR55WK48964
NOTE

This device complies with part 15 of the FCC Rules. Operation is subject to the following two conditions: (1) This device may not cause harmful interference, and (2) this device must accept interference received, including interference that may cause undesired operation.

CAUTION

Changes or modifications not expressly approved by the manufacturer could void the user's authority to operate the equipment.

Siemens VDO

5WK48891

Tested To Comply With FCC Standards

For Automobile Use

Location of the keyless drive antennas

The keyless drive system has a number of antennas located at various points in the vehicle.

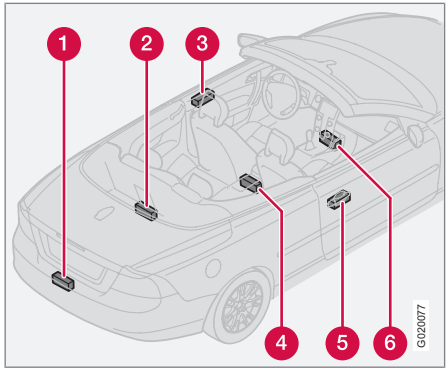

1. On the inside center of the rear bumper
2. Under the floor of the trunk, near the rear seat
3. Left door handle
4. Under the rear section of the center console
5. Right door handle
6. Under the front section of the center console

* Option/accessory, for more information, see Introduction.

Keyless drive*

WARNING

People with implanted pacemakers should not allow the pacemaker to come closer than 9 inches (22 cm) to any of the keyless drive system's antennas. This is to help prevent interference between the pacemaker and the keylesss drive system.

Locking and unlocking

Locking/unlocking the vehicle from the inside

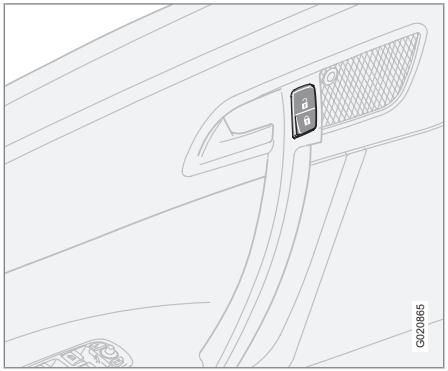

The switches near the door opening handles on either door can be used to lock or unlock both doors and the trunk, and to set the alarm.

– **Unlocking:** Press the upper section of the switch.

– **Locking:** Press the lower section of the lock button.

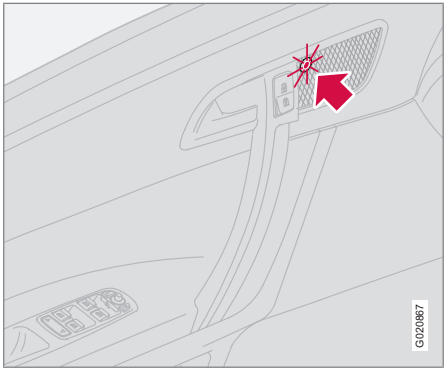

Lock indicator light

Lock indicator lights

An indicator light in each door will illuminate for approximately 5 minutes after the car has been locked using the remote key.

- If doors are locked: The indicator lights will flash once.
- If doors are Unlocked: The indicator lights will flash twice
- During driving with doors locked: The indicator lights will be Off.

NOTE

- The doors cannot be opened by pulling up the lock buttons.
- If both doors are closed when a lock button is pressed, the alarm will not be armed.
- Each door can also be locked manually using the lock button on that particular door. This applies only if the car has not been locked from the outside.
- The doors can also be unlocked (and the door opened) by pulling the handle in the door twice.

Opening the trunk from the inside[1]

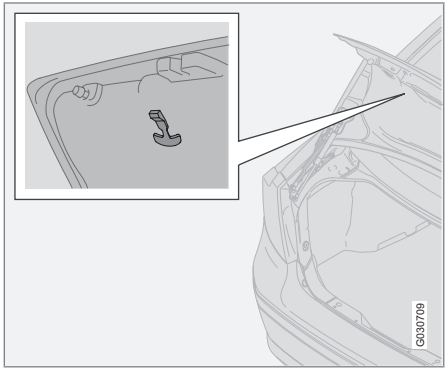

The vehicle is equipped with a florescent handle on the inside of the trunk lid, which can be used in an emergency situation to open the trunk from the inside.

- Pull the handle down to release the trunk lid.

After use, the handle must be pushed back into its original position before the trunk can be closed.

Mechanically opening the trunk

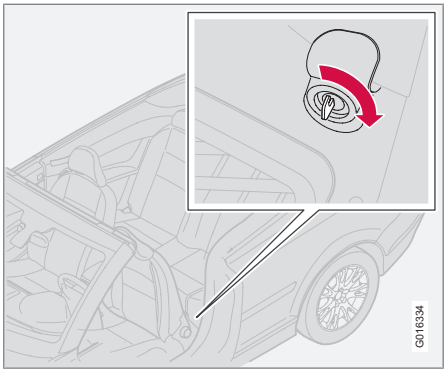

1. Fold down the driver's seat backrest to access the keyhole near the floor of the rear seat.
2. Fold up the tab covering the key hole.
3. Insert the key blade in the keyhole and turn it 110 degrees clockwise.

CAUTION

This function should never be used when the power retractable hard top is in motion. This could cause damage to the trunk lid/ hard top.

Locking the glove compartment

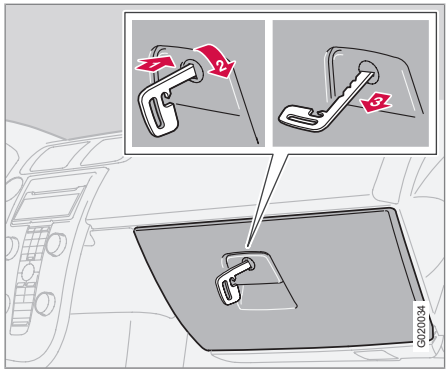

The glove compartment can only be locked and unlocked using the detachable key blade on the remote key, see page 119 for information on removing the key blade from the remote key.

1. Insert the key blade in the glove compartment lock.
2. Turn the key blade 90 degrees clockwise.
3. Remove the key blade from the lock.

Unlock the glove compartment in the reverse order.

[1] U.S. models only.

Alarm*

The alarm system

The alarm is automatically armed whenever the car is locked with the remote key, or if a front lock button is depressed.

When armed, the alarm continuously monitors a number of points on the car. The following conditions will trigger the alarm:

- The hood is forced open.
- The trunk is forced open.
- A door is forced open.
- The ignition switch is tampered with
- An attempt is made to start the car with a non-approved key (a key not coded to the car's ignition).
- If there is movement in the passenger compartment (if the car is equipped with the optional movement sensor).
- The car is lifted or towed (if the car is equipped with the optional inclination sensor)
- The battery is disconnected (while the alarm is armed).
- The siren is disconnected when the alarm is disarmed.
- The alarm system functions in the same way, regardless of whether the power retractable hard top is raised or lowered.

The alarm indicator light

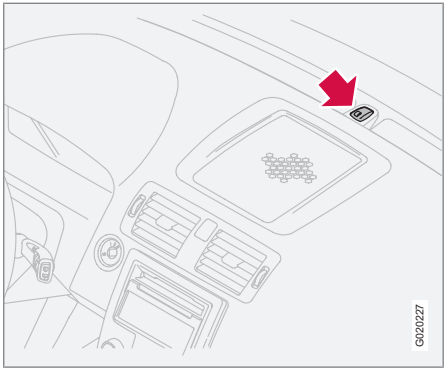

Alarm indicator light

The status of the alarm system is indicated by the indicator light on at the top of the dashboard (see the illustration):

- Indicator light off – the alarm is not armed
- The indicator light flashes every two seconds – the alarm is armed
- The indicator light flashes rapidly before the ignition is switched on – the alarm has been triggered. The message **ALARM TRIGGERED**, **CHECK CAR** will also be displayed.
- **Fault in the alarm system:** If a fault has been detected in the alarm system, a message will be shown in the information display. Contact your Volvo retailer to have the alarm system inspected and repaired if necessary.

Arming the alarm

– Press the **LOCK** button on the remote key, or press the central lock button on one of the front doors with the door open. One long flash of the turn signals will confirm that the alarm is armed.

Disarming the alarm

– Press the **UNLOCK** button on the remote key or insert the key in the ignition[1] to disarm the alarm. Two short flashes from the car's direction indicators confirm that the alarm has been deactivated and that all doors are unlocked.

[1] On vehicles with the optional keyless drive, press in the start control in the ignition switch.

* Option/accessory, for more information, see Introduction.

Turning off (stopping) the alarm

If the alarm is sounding, it can be stopped by pressing the **UNLOCK** button on the remote key or by inserting the key in the ignition switch. The driver's door must first be unlocked with the key blade.

NOTE

On vehicles equipped with the optional keyless drive, the start control must be removed from the ignition switch before the key can be inserted, see page 145 for instructions.

Audible/visual alarm signal

An audible alarm signal is given by a battery powered siren. The alarm cycle lasts for 30 seconds.

NOTE

The visual alarm signal is given by flashing all turn signals and turning on the interior lighting for approximately 5 minutes.

Temporarily turning off the accessory alarm sensor(s)

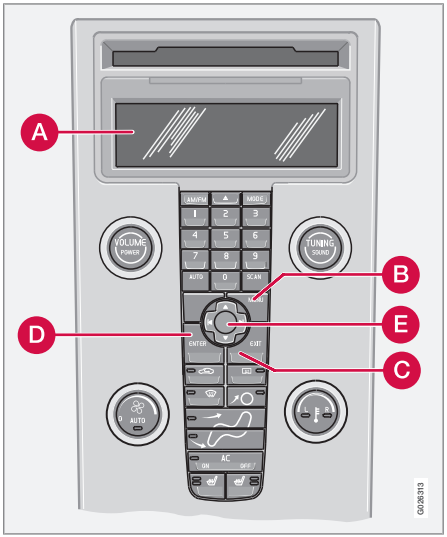

A Display

B **MENU**

C **EXIT**

D **ENTER**

E Menu navigation controls

In certain situations it may be desirable to turn off the accessory inclination and movement alarm sensors, and the double locking function if, for example, you drive your vehicle onto a ferry where the rocking of the boat could trigger the alarm or if a pet is left in the vehicle with the doors locked.

To do so:

1. Press **MENU** to enter the menu system and scroll to **Car settings** (for a more detailed description of the menus, see page 75.
2. Select **Reduced guard**.
3. Select **Activate once** and the message **Reduced guard – See manual** will appear in the information display. The alarm sensors and/or double locking function will be turned off when the vehicle is locked.

   or

   Select **Ask on exit**. Each time the ignition key is turned to position **0**, the message **Press ENTER to reduce guard until engine is started. Press EXIT to cancel** will be displayed. Select one of the alternatives:

Alarm*

- If the alarm sensors are to be deactivated, press **ENTER** and then lock the vehicle.
- If the vehicle is equipped with the double locking function, it will be deactivated at the same time.

The next time the ignition key is turned to position **II**, the sensors will be reactivated and **Full guard** will displayed.

or

- If you do not wish to deactivate the sensors, do not choose an alternative and lock the vehicle or press **EXIT** and lock the vehicle.

CAUTION

- The accessory sensors are automatically reconnected to the alarm system the next time the vehicle is unlocked and then locked again.
- This function will not turn off the vehicle's standard alarm.

U.S.A. FCC ID: MAYDA 5823(3)
This device complies with part 15 of the FCC rules. Operation is subject to the following conditions: (1) This device may not cause harmful interference, and (2) this device must accept any interference received, including interference that may cause undesired operation.

Canada IC: 4405A-DA 5823(3)
Movement sensor DA5823 by Dynex Operation is subject to the following conditions: (1) this device may not cause interference, and (2) this device must accept any interference, including interference that may cause undesired operation of the device.

* Option/accessory, for more information, see Introduction.

General information..... 136
Fuel requirements..... 139
Ignition switch..... 142
Starting the vehicle..... 143
Starting the vehicle with keyless drive*..... 145
Manual transmission, 6-speed*..... 146
Automatic transmission*..... 147
Shiftlock override..... 149
Brake system..... 150
Stability system..... 152
Towing..... 154
Jump starting..... 157
Towing a trailer..... 158
Detachable trailer hitch..... 160
Transporting loads..... 161
Blind Spot Information System (BLIS)*..... 162
Park assist*..... 166

G020912

* Option/accessory, for more information, see Introduction.

STARTING AND DRIVING

06

General information

Economical driving conserves natural resources

Better driving economy may be obtained by thinking ahead, avoiding rapid starts and stops and adjusting the speed of your vehicle to immediate traffic conditions.

Observe the following rules:

- Bring the engine to normal operating temperature as soon as possible by driving with a light foot on the accelerator pedal for the first few minutes of operation. A cold engine uses more fuel and is subject to increased wear.
- Whenever possible, avoid using the vehicle for driving short distances. This does not allow the engine to reach normal operating temperature.
- Drive carefully and avoid rapid acceleration and hard braking.
- Use the transmission's Drive (**D**) position as often as possible and avoid using kick-down.
- Do not exceed posted speed limits.
- Avoid carrying unnecessary items (extra load) in the vehicle.
- Maintain correct tire pressure. Check tire pressure regularly (when tires are cold).
- Remove snow tires when threat of snow or ice has ended.
- At highway driving speeds, fuel consumption will be lower with the air conditioning on and the windows closed than with the air conditioning off and the windows open.
- Using the onboard trip computer's fuel consumption modes can help you learn how to drive more economically.

Other factors that decrease gas mileage are:

- Dirty air cleaner
- Dirty engine oil and clogged oil filter
- Dragging brakes
- Incorrect front end alignment

Some of the above mentioned items and others are checked at the standard maintenance intervals.

WARNING

Driving with the trunk open: Driving with the trunk open could lead to poisonous exhaust gases entering the passenger compartment. If the trunk must be kept open for any reason, proceed as follows:

1. Close the windows.
2. Set the ventilation system control to air flow to floor, windshield and side windows and the blower control to its highest setting.

Weight distribution affects handling

At the specified curb weight your vehicle has a tendency to understeer, which means that the steering wheel has to be turned more than might seem appropriate for the curvature of a bend. This ensures good stability and reduces the risk of rear wheel skid. Remember that these properties can alter with the vehicle load. The heavier the load in the cargo area, the less the tendency to understeer.

Handling, roadholding

Vehicle load, tire design and inflation pressure all affect vehicle handling. Therefore, check that the tires are inflated to the recommended pressure according to the vehicle load. See the "Tire pressure" section. Loads should be distributed so that capacity weight or maximum permissible axle loads are not exceeded.

Driving through water

The vehicle can be driven through water up to a depth of approximately 9 in. (25 cm), at a maximum speed of 6 mph (10 km/h).

- Take particular care when driving through flowing water.
- Clean the electrical connections for trailer wiring after driving in mud or water
- When driving through water, maintain low speed and do not stop in the water.

WARNING

After driving through water, press lightly on the brake pedal to ensure that the brakes are functioning normally. Water or mud can make the brake linings slippery, resulting in delayed braking effect.

CAUTION

- Engine damage will occur if water is drawn into the air cleaner.
- If the vehicle is driven through water deeper than 9 in. (25 cm), water may enter the differential and the transmission. This reduces the oil's lubricating capacity and may shorten the service life of these components.
- Do not allow the vehicle to stand in water up to the door sills longer than absolutely necessary. This could result in electrical malfunctions.
- If the engine has been stopped while the car is in water, do not attempt to restart the engine. Have the car towed out of the water.

Cold weather precautions

If you wish to check your vehicle before the approach of cold weather, the following advice is worth noting:

- Make sure that the engine coolant contains 50 percent antifreeze. Any other mixture will reduce freeze protection. This gives protection against freezing down to –31 °F (–35 °C). See section "Coolant". The use of "recycled" antifreeze is not approved by Volvo. Different types of antifreeze must not be mixed.
- Volvo recommends using only genuine Volvo antifreeze in your vehicle's radiator. Your Volvo retailer stocks plenty of Volvo engine coolant to help protect your vehicle during cold weather.
- Try to keep the fuel tank well filled – this prevents the formation of condensation in the tank. In addition, in extremely cold weather conditions it is worthwhile to add fuel line de-icer before refueling.
- The viscosity of the engine oil is important. Oil with low viscosity (thinner oil) improves cold-weather starting as well as decreasing fuel consumption while the engine is warming up. For winter use, 5W-30 oil, particularly the synthetic type[1], is recommended. Be sure to use good quality oil but do not use cold-weather oil for hard driving or in warm weather, see page 271 for more information.
- The load placed on the battery is greater during the winter since the windshield wipers, lighting, etc. are used more often. Moreover, the capacity of the battery decreases as the temperature drops. In very cold weather, a poorly charged battery can freeze and be damaged. It is therefore advisable to check the state of charge more frequently and spray an anti-rust oil on the battery posts.
- Volvo recommends the use of snow tires on all four wheels for winter driving – see the chapter "Wheels and tires."
- To prevent the washer fluid reservoir from freezing, add washer solvents containing antifreeze (see page 213 for the location of the washer fluid reservoir). This is important since dirt is often splashed on the windshield during winter driving, requiring the frequent use of the washers and wipers. Volvo Washer Solvent should be diluted as follows: Down to 14 °F (–10 °C): 1 part washer solvent and 4 parts water Down to 5 °F (–15 °C): 1 part washer solvent and 3 parts water Down to 0 °F (–18 °C): 1 part washer solvent and 2 parts

[1] Synthetic oil is not used when the oil is changed at the normal maintenance intervals except at owner request and at additional charge. Please consult your Volvo retailer.

General information

water Down to –18 °F (–28 °C): 1 part washer solvent and 1 part water.

- Use Volvo Teflon Lock Spray in the locks.

NOTE

Avoid using de-icing sprays as they can cause damage to the locks.

Conserving electrical current

Keep the following in mind to help minimize battery drain:

- When the engine is not running, avoid turning the ignition key to position **II**. Many electrical systems (the audio system, the optional navigation system, power windows, etc) will function with the ignition key in position **I**. This position reduces drain on the battery.
- Please keep in mind that using systems, accessories, etc that consume a great deal of current when the engine is not running could result in the battery being completely drained.
- The optional 12 volt socket in the trunk (certain models only) provides electrical current even with the ignition switched off, which drains the battery.

NOTE

- If the ignition is switched on, a warning message will be displayed in the text window in the instrument panel when the battery charge is low.
- An energy conserving function designed into the vehicle's electrical system will switch off certain functions or reduce the load on the battery by, e.g., reducing the audio system's volume.

Before a long distance trip

It is always worthwhile to have your vehicle checked at a trained and qualified Volvo service technician before driving long distances. Your trained and qualified Volvo service technician will also be able to supply you with bulbs, fuses, spark plugs and wiper blades for your use in the event that problems occur.

As a minimum, the following items should be checked before any long trip:

- Check that engine runs smoothly and that fuel consumption is normal.
- Check for fuel, oil, and fluid leakage
- Have the transmission oil level checked[2].
- Check condition of drive belts.
- Check state of the battery's charge.
- Examine tires carefully (the spare tire as well), and replace those that are worn. Check tire pressures.
- The brakes, front wheel alignment, and steering gear should be checked by your Volvo retailer only.
- Check all lights, including high beams.
- Reflective warning triangles are legally required in some states/provinces.
- Have a word with your Volvo retailer if you intend to drive in countries where it may be difficult to obtain the correct fuel.
- Consider your destination. If you will be driving through an area where snow or ice are likely to occur, consider snow tires.

[2] To prevent injury from contact with hot surfaces, do not inspect your vehicle's transmission fluid yourself. Have your vehicle's transmission fluid level inspected by a qualified Volvo service technician.

Octane rating

Minimum octane

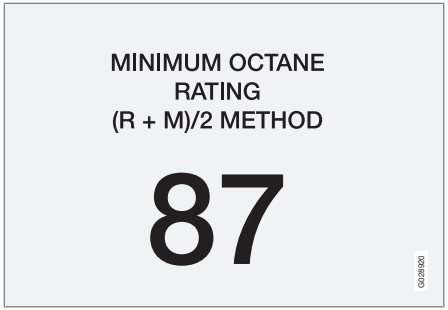

Typical pump octane label

Volvo recommends premium fuel for best performance, but using 87 octane or above will not affect engine reliability.

Volvo engines are designed to achieve rated horsepower, torque, and fuel economy performance using premium 91 octane fuel.

Demanding driving

In demanding driving conditions, such as operating the vehicle in hot weather, towing a trailer, or driving for extended periods at higher altitudes than normal, it may be advisable to switch to higher octane fuel (91 or higher) or to change gasoline brands to fully utilize your engine's capacity, and for the smoothest possible operation.

NOTE

When switching to higher octane fuel or changing gasoline brands, it may be necessary to fill the tank more than once before a difference in engine operation is noticeable.

Fuel Formulations

Do not use gasoline that contains lead as a knock inhibitor, and do not use lead additives. Besides damaging the exhaust emission control systems on your vehicle, lead has been strongly linked to certain forms of cancer.

Many fuels contain benzene as a solvent. Unburned benzene has been strongly linked to certain forms of cancer. If you live in an area where you must fill your own gas tank, take precautions. These may include:

- standing upwind away from the filler nozzle while refueling
- refueling only at gas stations with vapor recovery systems that fully seal the mouth of the filler neck during refueling
- wearing neoprene gloves while handling a fuel filler nozzle.

Use of Additives

With the exception of gas line antifreeze during winter months, do not add solvents, thickeners, or other store-bought additives to your vehicle's fuel, cooling, or lubricating systems. Overuse may damage your engine, and some of these additives contain organically volatile chemicals. Do not needlessly expose yourself to these chemicals.

WARNING

Never carry a cell phone that is **switched on** while refueling your vehicle. If the phone rings, this may cause a spark that could ignite gasoline fumes, resulting in fire and injury.

WARNING

Carbon monoxide is a poisonous, colorless, and odorless gas. It is present in all exhaust gases. If you ever smell exhaust fumes inside the vehicle, make sure the passenger compartment is ventilated, and immediately return the vehicle to a trained and qualified Volvo service technician for correction.

Fuel requirements

Deposit control gasoline (detergent additives)

Volvo recommends the use of detergent gasoline to control engine deposits. Detergent gasoline is effective in keeping injectors and intake valves clean. Consistent use of deposit control gasolines will help ensure good drivability and fuel economy. If you are not sure whether the gasoline contains deposit control additives, check with the service station operator.

NOTE

Volvo does not recommend the use of store-bought fuel injector cleaning additives.

Unleaded fuel

Each Volvo has a three-way catalytic converter and must use only unleaded gasoline. U.S. and Canadian regulations require that pumps delivering unleaded gasoline be labelled "UNLEADED". Only these pumps have nozzles which fit your vehicle's filler inlet. It is unlawful to dispense leaded fuel into a vehicle labelled "unleaded gasoline only". Leaded gasoline damages the three-way catalytic converter and the heated oxygen sensor system. Repeated use of leaded gasoline will lessen the effectiveness of the emission control system and could result in loss of emission warranty coverage. State and local vehicle inspection programs will make detection of misfueling easier, possibly resulting in emission test failure for misfueled vehicles.

NOTE

Some U.S. and Canadian gasolines contain an octane enhancing additive called methylcyclopentadienyl manganese tricarbonyl (MMT). If such fuels are used, your Emission Control System performance may be affected, and the Check Engine Light (malfunction indicator lamp) located on your instrument panel may light. If this occurs, please return your vehicle to a trained and qualified Volvo service technician for maintenance.

Gasoline containing alcohol and ethers

Some fuel suppliers sell gasoline containing "oxygenates" which are usually alcohols or ethers. In some areas, state or local laws require that the service pump be marked indicating use of alcohols or ethers. However, there are areas in which the pumps are unmarked. If you are not sure whether there is alcohol or ethers in the gasoline you buy, check with the service station operator. To meet seasonal air quality standards, some areas require the use of "oxygenated" fuel. Volvo allows the use of the following "oxygenated" fuels; however, the octane ratings listed on this page must still be met.

Alcohol – Ethanol: Fuels containing up to 10% ethanol by volume may be used. Ethanol may also be referred to as Ethyl alcohol, or "Gasohol".

Ethers – MTBE: Fuels containing up to 15% MTBE may be used.

Methanol

Do not use gasolines containing methanol (methyl alcohol, wood alcohol). This practice can result in vehicle performance deterioration and can damage critical parts in the fuel system. Such damage may not be covered under the New Vehicle Limited Warranty.

Fuel filler door

Press the button on the light switch panel (see the illustration on page 59) **with the ignition switched off** to unlock the fuel filler door. Please note that the fuel filler door will remain unlocked until the vehicle begins to move forward. An audible click will be heard when the fuel filler door relocks.

If you intend to leave your vehicle while it is being refueled, this feature enables you to lock the doors/trunk while leaving the fuel filler door unlocked.

You can also keep the vehicle locked if you remain inside it during refueling. The central locking button does not lock the fuel filler door.

Be sure the fuel filler door is not obstructed and is completely closed after refueling. **Open the fuel filler cap slowly during hot weather**.

Refueling

The fuel tank is designed to accommodate possible expansion of the fuel in hot weather, see page 269 for fuel tank volume. Be aware that the "usable" tank capacity will be somewhat less than the specified maximum. When the fuel level is low, such factors as ambient temperature, the fuel's "Reid vapor pressure" characteristics, and terrain can affect the fuel pump's ability to supply the engine with an adequate supply of fuel. Therefore, it is advisable to refuel as soon as possible when the needle nears the red zone, or when the fuel warning light comes on.

CAUTION

- Do not refuel with the engine running[1]. Turn the ignition off or to position **I**. If the ignition is on, an incorrect reading could occur in the fuel gauge
- After refueling, close the fuel filler cap by turning it clockwise until it clicks into place.
- Avoid overfilling the fuel tank. Do not press the handle on the filler nozzle more than one extra time. Too much fuel in the tank in hot weather conditions can cause the fuel to overflow. Overfilling could also cause damage to the emission control systems.
- Avoid spilling gasoline during refueling. In addition to causing damage to the environment, gasolines containing alcohol can cause damage to painted surfaces, which may not be covered under the New Vehicle Limited Warranty.
- Do not use gasolines containing methanol (methyl alcohol, wood alcohol). This practice can result in vehicle performance deterioration and can damage critical parts in the fuel system. Such damage may not be covered under the New Vehicle Limited Warranty.

[1] If the fuel filler cap is not closed tightly or if the engine is running when the vehicle is refueled, the Check Engine Light (malfunction indicator lamp) may indicate a fault. However, your vehicle's performance will not be affected. Use only Volvo original or approved fuel filler caps.

Ignition switch

Ignition switch positions

0 – Locked position

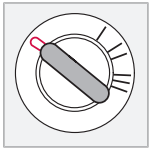

Remove the key to lock the steering wheel[1]. Never turn the key to position **0** while driving or when the vehicle is being towed.

NOTE

A ticking sound may be audible if the key is turned to a position between **0** and **I**. To stop this sound, turn the key to position **II** and back to position **0**.

I – Intermediate position[2]

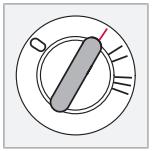

Certain accessories, radio, etc. on, daytime running lights off.

II – Drive position

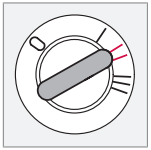

The key's position when driving. The vehicle's entire electrical system is activated.

III – Start position

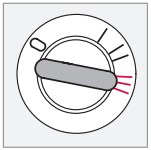

Turn the key to this position and release it immediately. The key returns automatically to the Drive position.

A chime will sound if the key is left in the ignition and the driver's door is opened (does not apply to vehicles with the optional keyless drive).

[1] Automatic transmission: the gear selector must be in the Park position. The optional keyless drive start control does not need to be removed.
[2] Please be aware that leaving the key in this positions **I** or **II** will increase battery drain.

To start the engine

WARNING

Before starting, check that the seat, steering wheel and mirrors are adjusted properly. Make sure the brake pedal can be depressed completely. Adjust the seat if necessary.

1. Fasten the seat belt.
2. Apply the parking brake if not already set. The gear selector should be locked in the Park (**P**) position (Shiftlock). See also page 149.

   Manual transmission: The clutch must be fully depressed.

NOTE

After a cold start, idle speed may be noticeably higher than normal for a short period. This is done to help bring components in the emission control system to their normal operating temperature as quickly as possible, which enables them to control emissions and help reduce the vehicle's impact on the environment.

3. The vehicle is equipped with an autostart feature. Without touching the throttle pedal, turn the key to position **III** and release it. The starter motor will then operate automatically (for up to ten seconds) until the engine starts. If the engine fails to start, repeat this step.
4. To release the gear selector from the Park (**P**) position, the engine must be running (or the ignition key must be in position **II**) and the brake pedal must be depressed.
5. Select the desired gear. On models with an automatic transmission, the gear engages after a very slight delay which is especially noticeable when selecting **R**.

NOTE

- **Immobilizer**: If two of the keys to your vehicle are close together, e.g., on the same key ring when you try to start the vehicle, this could cause interference in the immobilizer system and result in the vehicle not starting. If this should occur, remove one of the keys from the key ring before trying to start the vehicle again.
- **Keylock**: Models equipped an automatic transmission have a keylock system. When the engine is switched off, the gear selector must be in the Park (**P**) position before the key can be removed from the ignition switch[1].
- When starting in cold weather, the transmission may shift up at slightly higher engine speeds than normal until the automatic transmission fluid reaches normal operating temperature.
- Do not race a cold engine immediately after starting. Oil flow may not reach some lubrication points fast enough to prevent engine damage.

[1] The optional keyless drive start control does not need to be removed from the ignition switch.

Starting the vehicle

WARNING

Volvo's floor mats are specially manufactured for your car. They must be firmly secured in the clips on the floor so that they cannot slide and become trapped under the pedals on the driver's side.

- Always place the gear selector in Park (**P**) (manual transmission: first or reverse gear) and apply the parking brake before leaving the vehicle.and apply the parking brake before leaving the vehicle. Never leave the vehicle unattended with the engine running.
- Always open garage doors fully before starting the engine inside a garage to ensure adequate ventilation. The exhaust gases contain carbon monoxide, which is invisible and odorless but very poisonous.

CAUTION

Automatic transmission: The engine should be idling when you move the gear selector. Never accelerate until after you feel the transmission engage! Accelerating immediately after selecting a gear will cause harsh engagement and premature transmission wear. Selecting **P** or **N** when idling at a standstill for prolonged periods of time will help prevent overheating of the automatic transmission fluid.

Starting a vehicle with keyless drive

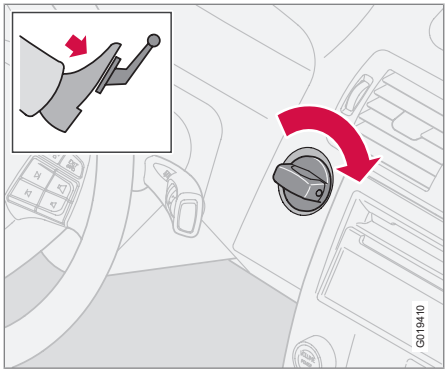

Keyless drive makes it possible to unlock, start and lock the vehicle without using a remote key.

A start control is fitted in the ignition switch on vehicles equipped with the optional keyless drive. This control is used in the same way as the ignition key to start the engine. See also page 143 for general information on starting the engine.

NOTE

A keyless drive remote key must be inside the vehicle in order to start the engine.

1. Press the brake pedal (the clutch pedal must also be fully depressed on models with a manual transmission).
2. Press in the keyless drive start control and turn it to position **III**.

NOTE

The vehicle is equipped with an **autostart** function that makes it possible to start the engine without holding the start control in position III. Turn the start control to position **III** and release it. The starter motor will then operate automatically (for up to ten seconds) until the engine starts.

Starting the vehicle with the ignition key (remote key)

A vehicle with keyless drive can also be started with the ignition key (if, for example, the battery in the keyless drive remote key is weak). To do so:

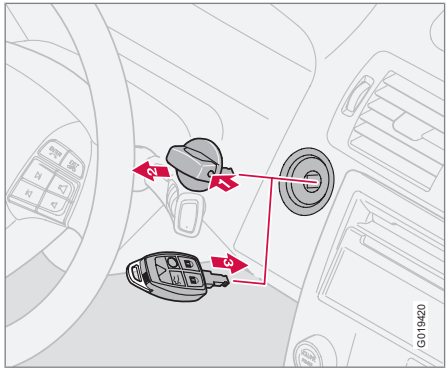

Removing the keyless drive start control

1. Press the catch on the side of the start control (see the illustration).
2. Pull the keyless drive start control out of the ignition switch.
3. Insert the remote key into the ignition switch and turn it to position **III** to start the engine, page 143 for complete starting information.

Manual transmission, 6-speed*

6-speed manual transmission

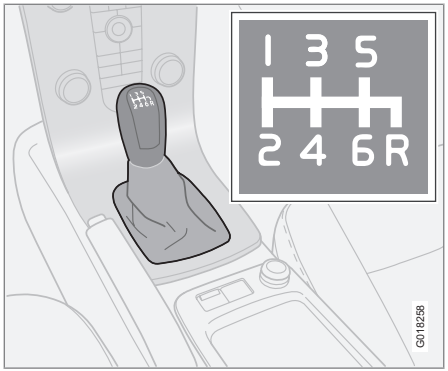

- Depress the clutch pedal completely when changing gears[1]
- Remove your foot from the clutch pedal while driving. The shift pattern should be followed.
- Overdrive (5th and 6th gears) should be used as often as possible to help improve fuel economy.

Engaging reverse gear, 6-speed transmission

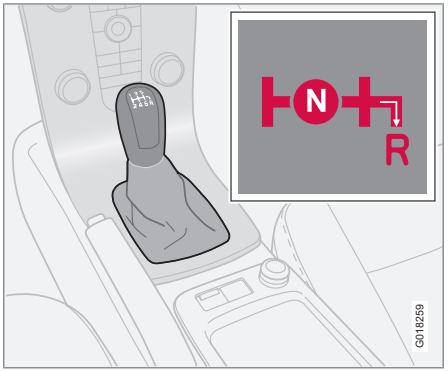

Reverse gear should only be engaged from a complete stop.

NOTE

Reverse gear is electronically blocked to help prevent it from being selected while the vehicle is moving foward.

CAUTION

Never shift into reverse while moving forward.

WARNING

An extra mat on the driver's floor can cause the accelerator, brake, and/or clutch pedal to catch. Check that the movement of these pedals is not impeded. Not more than one protective floor covering may be used at one time.

[1] Clutch interlock: The clutch must be fully depressed before you can start your car. If the clutch is notdepressed, it will not be possible to start the engine.

* Option/accessory, for more information, see Introduction.

Shiftgate positions

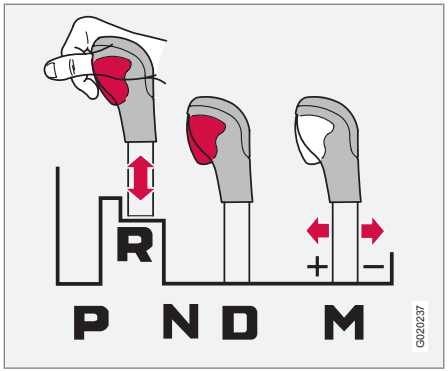

Depress the button on the front of the gear selector knob to move the selector between the **R**, **N**, **D**, and **P** positions.

The gear selector can be moved freely between the Geartronic (manual shifting) and Drive (**D**) positions while driving.

Gear selector positions

P – Park

Select the **P** position when starting or parking.

In **P**, the transmission is mechanically blocked (Shiftlock). Always apply the parking brake when parking.

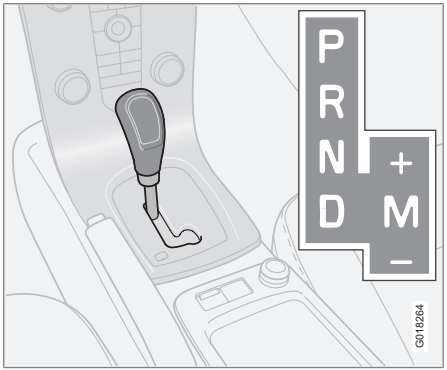

***D** - left position: automatic shifting, **M** - right position: manual shifting*

CAUTION

The car must be stationary when selecting position **P**.

R – Reverse

The car must be stationary when shifting to position **R**.

N – Neutral

N is the neutral position. The engine can be started, but no gear is selected. Apply the parking brake when the car is stationary with the gear selector in **N**.

NOTE

If the gear selector is in the Neutral position and the vehicle has been at a standstill for at least 3 seconds, the brake pedal must be pressed before the gear selector can be moved to another position.

In order to move the gear selector to another position:

1. Turn the ignition key to position **II** (if the engine is not already running).
2. Depress the brake pedal.
3. Move the gear selector to the desired position.

D – Drive

D is the normal driving position. The Drive position offers 5 forward gears[1]. The car automatically shifts between the various forward gears,

[1] T5 models have 6 forward gears.

Automatic transmission*

based on the level of acceleration and speed. The car must be at a standstill when shifting to position **D** from position **R**.

Manual shifting – Geartronic

The manual shifting mode (Geartronic) can be selected at any time to manually select forward gears, including while the car is moving.

NOTE

Reverse, Neutral, and Park cannot be selected in Geartronic mode.

- To access the Manual (**M**) shifting position from Drive (**D**), move the gear selector to the right to **M**.
- To return to the Drive (**D**) position from **M**, move the gear selector to the left.

While driving

- If you select the **M** position while driving, the gear that was being used in the Drive position will also initially be selected in the **M** position.
- Move the gear selector forward (toward "**+**") to shift to a higher gear or rearward (toward "**–**") to shift to a lower gear.
- If you hold the gear selector toward "**–**", the transmission will downshift one gear at a time and will utilize the braking power of the engine. If the current speed is too high for using a lower gear, the downshift will not occur until the speed has decreased enough to allow the lower gear to be used.
- If you slow to a very low speed, the transmission will automatically shift down.

Cold starts (turbo engines)

When driving before the engine has reached its normal operating temperature, the transmission will shift up at slightly higher engine speeds to heat the three-way catalytic converter as quickly as possible.

Kickdown

Automatic shift to a lower gear (kickdown) is achieved by depressing the accelerator pedal fully and briskly. An upshift will occur when approaching the top speed for a particular gear or by releasing the accelerator pedal slightly. Kickdown can be used for maximum acceleration or when passing at highway speeds.

Safety function

To help prevent excessive engine speeds (rpm) that could lead to engine damage, the engine management system includes a function that prevents kickdown from taking place if the engine speed is too high.

Kickdown will not occur if the driver attempts to use this function when engine speeds are too high. The transmission will remain in the currently selected gear.

* Option/accessory, for more information, see Introduction.

Overriding the shiftlock system

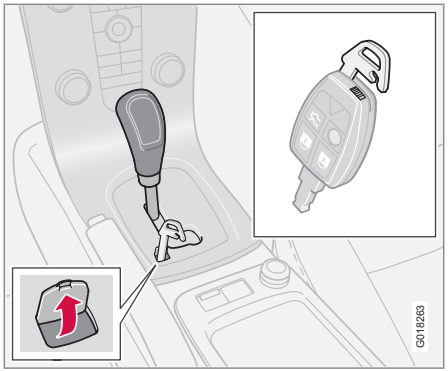

Shiftlock prevents the gear selector from being moved out of the **P**position unless the ignition key is in position **II** and the brake pedal is depressed.

In certain cases it may be necessary to move the gear selector from the **P**position manually.

To manually override the Shiftlock system:

1. Apply the parking brake.
2. Depress the brake pedal.
3. There is a small cover below **P**-**R**-**N**-**D** on the gear selector panel. Open the rear edge of the panel.
4. Insert the key blade, see page 120, into the opening and press it down until it bottoms.
5. With the key blade pressed down, move the gear selector out of the **P** position.

Brake system

Brake circuit malfunction

The brake system is a hydraulic system consisting of two separate brake circuits. If a problem should occur in one of these circuits, it is still possible to stop the vehicle with the other brake circuit.

If the brake pedal must be depressed farther than normal and requires greater foot pressure, the stopping distance will be longer.

A warning light in the instrument panel will light up to warn the driver that a fault has occurred.

If this light comes on while driving or braking, stop immediately and check the brake fluid level in the reservoir.

NOTE

Press the brake pedal hard and maintain pressure on the pedal – do not pump the brakes.

WARNING

If the fluid level is below the **MIN** mark in the reservoir or if a brake system message is shown in the information display, **DO NOT DRIVE**. Have the vehicle towed to a Volvo retailer and have the brake system inspected.

Power brakes function only when the engine is running

The power brakes utilize vacuum pressure which is only created when the engine is running. Never let the vehicle roll to a stop with the engine switched off.

If the power brakes are not working, considerably higher pressure will be required on the brake pedal to compensate for the lack of power assistance. This can happen for example when towing your vehicle or if the engine is switched off when the vehicle is rolling. The brake pedal feels harder than usual.

Water on brake discs and brake pads affects braking

Driving in rain and slush or passing through an automatic car wash can cause water to collect on the brake discs and pads. This will cause a delay in braking effect when the pedal is depressed. To avoid such a delay when the brakes are needed, depress the pedal occasionally when driving through rain, slush, etc. This will remove the water from the brakes. Check that brake application feels normal. This should also be done after washing or starting in very damp or cold weather.

Severe strain on the brake system

The brakes will be subject to severe strain when driving in mountains or hilly areas, or when towing a trailer. Vehicle speed is usually slower, which means that the cooling of the brakes is less efficient than when driving on level roads. To reduce the strain on the brakes, shift into a lower gear and let the engine help with the braking. Do not forget that if you are towing a trailer, the brakes will be subjected to a greater than normal load.

Anti-lock brakes (ABS)

The Anti-lock Braking System (ABS) helps to improve vehicle control (stopping and steering) during severe braking conditions by limiting brake lockup. When the system "senses" impending lockup, braking pressure is automatically modulated in order to help prevent lockup that could lead to a skid.

The system performs a self-diagnostic test when the engine is started and when the vehicle first reaches a speed of approximately 12 mph (20 km/h). The brake pedal will pulsate several times and a sound may be audible from the ABS control module. This is normal.

For optimal ABS braking effect:

1. Press down on the brake pedal with full force. The pedal will pulsate.
2. Steer the vehicle in the direction of travel and keep the brake pedal depressed.

Electronic Brake Force Distribution (EBD)

EBD is an integrated part of the ABS system. EBD regulates the hydraulic pressure to the rear brakes to help provide optimal braking capacity.

The switching of the ABS modulator will be audible and the brake pedal will pulsate during braking. Please be aware that ABS does not increase the absolute braking potential of the vehicle. While control will be enhanced, ABS will not shorten stopping distances on slippery surfaces.

If the warning lamp lights up there is a malfunction of the ABS system (the standard braking system will still function) and the vehicle should be driven cautiously to a trained and qualified Volvo service technician for inspection.

WARNING

If the **BRAKES** and **ABS** warning symbols light at the same time, there may be a problem in the brake system. If the brake fluid level is normal in these circumstances, drive carefully to a trained and qualified Volvo service technician to have the brake system checked.

Emergency Brake Assistance – EBA

EBA is designed to provide full brake effect immediately in the event of sudden, hard braking. The system is activated by the speed with which the brake pedal is depressed.

When the EBA system is activated, the brake pedal will go down and pressure in the brake system immediately increases to the maximum level. Maintain full pressure on the brake pedal in order to utilize the system completely. EBA is automatically deactivated when the brake pedal is released.

NOTE

- When the EBA system is activated, the brake pedal will go down and pressure in the brake system immediately increases to the maximum level. You must maintain full pressure on the brake pedal in order to utilize the system completely. There will be no braking effect if the pedal is released. EBA is automatically deactivated when the brake pedal is released.
- When the vehicle has been parked for some time, the brake pedal may sink more than usual when the engine is started. This is normal and the pedal will return to its usual position when it is released.

Stability system

Dynamic Stability Traction Control (DSTC)

The stability system consists of a number of functions designed help reduce wheel spin, counteract skidding, and to generally help improve directional stability.

A pulsating sound will be audible when the system is actively operating and is normal.

Traction control (TC)

This function is designed to help reduce wheel spin by transferring power from a drive wheel that begins to lose traction to the wheel on the opposite side of the vehicle (on the same axle).

TC is most active at low speeds.

This is one of the stability system's permanent functions and cannot be switched off.

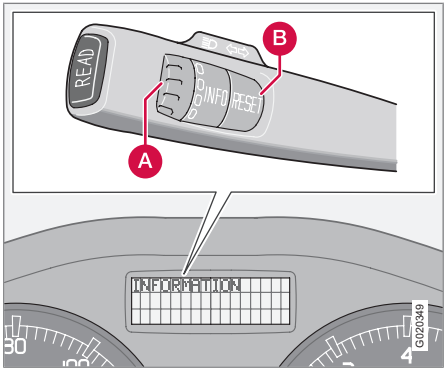

A Thumb wheel

B RESET button

Spin control (SC)

The spin control function is designed to help prevent the drive wheels from spinning while the vehicle is accelerating.

Under certain circumstances, such as when driving with snow chains, or driving in deep snow or loose sand, it may be advisable to temporarily switch off this function for maximum tractive force.

Temporarily switching off Spin control

1. Turn the thumbwheel (A) on the left-side steering wheel lever until the **DSTC** menu is displayed.
2. Hold down the **RESET** button (B) to toggle between **DSTC SPIN CONTROL ON** or **OFF**.

NOTE

- The message **DSTC SPIN CONTROL OFF** indicates that the stability system's spin control function has temporarily been switched off.
- The stability control indicator light will illuminate and remain on until spin control has been reactivated.
- The spin control function is automatically enabled each time the engine is started.
- **DSTC ON** indicates that all system functions are active.

Active yaw control – AYC (DSTC only)

This function helps maintain directional stability, for example when cornering, by braking one or more of the wheels if the vehicle shows a tendency to skid or slide laterally.

This is one of the stability system's permanent functions and cannot be switched off.

WARNING

The car's handling and stability characteristics will be altered if the DSTC system functions have been disabled.

DSTC-related messages in the text window

- "TRACTION CONTROL TEMPORARILY OFF" – The system has been temporarily switched off due to high brake temperature and will automatically switch on again when the brakes have cooled.
- "ANTI SKID SERVICE REQUIRED" – the system has been automatically disengaged due to a fault. A trained and qualified Volvo service technician retailer should check the system.

Symbols used by the stability system

Stability system indicator light

Information symbol

If the [i] and symbols light up at the same time, read the message in the display.

If only the symbol lights up, this indicates one of the following situations:

- The light illuminates for approximately 2 seconds to indicate that the system is performing a self-diagnostic test when the engine is started.
- If the light flashes while driving, this indicates that the stability system is actively functioning to help counteract wheel spin and/or a skid.
- If this light stays on after the engine has started or comes on while driving, there may be a fault in the stability system. Consult a trained and qualified Volvo service technician.
- If Spin control has been intentionally switched off, a message is displayed and the light will stay on as a reminder that this function has been disabled by the driver.

WARNING

The stability system is intended to help improve driving safety. It supplements, but can never replace, the driver's judgement and responsibility when operating the vehicle. Speed and driving style should always be adapted to traffic and road conditions.

Towing

Emergency towing

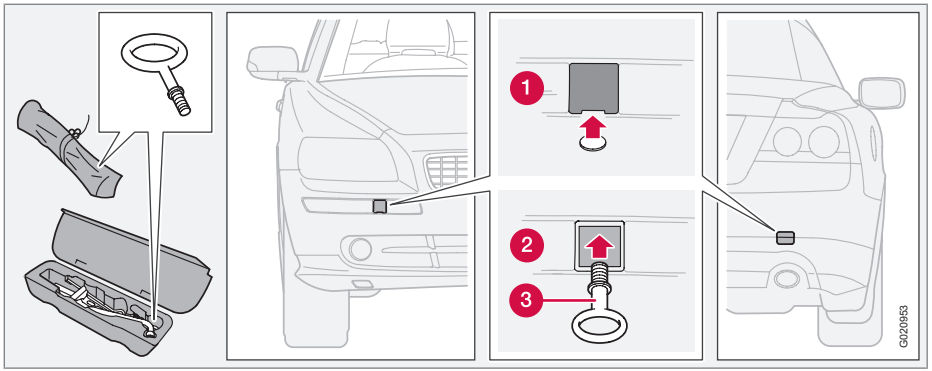

The towing eyelet is located in the tool bag, which is stowed in the ski hatch. This eyelet must be screwed into the positions provided on the right sides of either the front or rear bumper (see the illustration).

To attach the towing eyelet:

1. Press the mark on the lower edge of the cover (1) to open it.
2. Screw the towing eyelet (3) in place first by hand and then using the tire iron until it is securely in place.

– After the vehicle has been towed, the eyelet should be removed and returned to the tool bag.

– Press the cover back into position.

WARNING

Do not use the towing eyelets to pull the vehicle up onto a flat bed tow truck.

Towing a vehicle with all four wheels on the ground

WARNING

Volvo does not recommend towing a disabled vehicle behind another vehicle. Significant difficulty in steering and braking, combined with unfavorable weather, traffic, and road conditions may make it impossible to maintain vehicle control.

1. Apply the parking brake.

WARNING

Towing a vehicle with a locked steering wheel will make the vehicle impossible to steer.

2. Insert the key into the ignition to unlock the steering wheel. The steering wheel must be unlocked. With the engine off and the vehicle at a standstill, great effort will be required to turn the steering wheel.
3. Turn the ignition key to position **II**.
4. Place the gear selector in neutral. For vehicles with automatic transmissions, follow instruction on page 149, "Shiftlock override" to allow the gear selector to be moved from the Park position.
5. Keep firm pressure on the brake pedal while releasing the parking brake.
6. When towing has been completed, return the gear selector to Park (automatic) or Reverse (manual) and apply the parking brake.

The following points should also be observed:

- **Never exceed 50 mph (80 km/h)**. Never exceed local towing speed limits and heed all local towing restrictions.
- **Never tow farther than 50 miles (80 km).**
- Keep the tow rope taut at all times while the vehicle is in motion.
- The disabled vehicle should be towed in the forward direction only.

WARNING

- Never allow a vehicle to be towed without a driver behind the wheel of the disabled vehicle.
- Never remove the key from the ignition while the vehicle is moving. The steering wheel could lock, making it impossible to steer the vehicle.
- When the engine is not running, steering resistance and the effort needed to apply the brakes will be great.
- Never attempt to tow a vehicle with a dead battery at night.

CAUTION

- Check with state and local authorities before attempting this type of towing, as vehicles being towed are subject to regulations regarding maximum towing speed, length and type of towing device, lighting, marker flags, etc.
- Never attempt to push- or tow-start a vehicle with a dead battery. This would inject unburned fuel into the three-way catalytic converter(s), causing overheating, backfiring, and damage, see page 157 for instructions on jump starting the vehicle.

Towing vehicles with front wheel drive

Volvo recommends the use of flat bed equipment for towing vehicles with front wheel drive. If wheel lift equipment must be used, please use extreme caution to help avoid damage to the vehicle.

In this case, the vehicle should be towed with the rear wheels on the ground if at all possible.

If it is absolutely necessary to tow the vehicle with the front wheels on the ground, please refer to the towing information on the previous page.

Towing

- Sling-type equipment applied at the front will damage radiator and air conditioning lines.
- It is equally important not to use sling-type equipment at the rear or apply lifting equipment inside the rear wheels; serious damage to the rear axle may result.
- If the vehicle is being towed on a flat bed truck, the towing eyelets must not be used to secure the vehicle on the flat bed. Consult the tow truck operator.

WARNING

- Remember that the power brakes and power steering will not function when engine is not running. The braking and steering systems will function but considerably higher pressure will be required on the brake pedal and greater steering effort must be exerted.
- The towing eyelets must not be used for pulling the vehicle out of a ditch or for any similar purpose involving severe strain. Do not use the towing eyelets to pull the vehicle up onto a flat bed tow truck.

Jump starting the vehicle

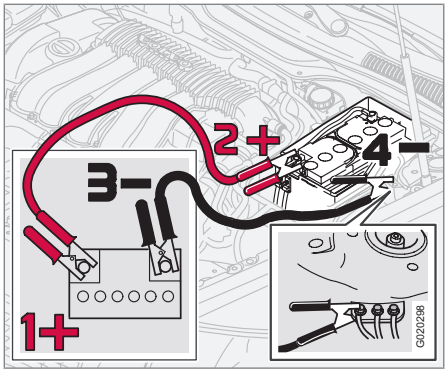

Follow these instructions to jump start your vehicle's dead battery or to jump start another vehicle's dead battery using your vehicle. If the 12-volt auxiliary battery to be used is in another vehicle, check that the vehicles are not touching to prevent premature completion of a circuit. Be sure to follow jump starting instructions provided for the other vehicle.

To jump start your vehicle:

1. Switch off the ignition.
2. First connect the auxiliary battery positive (+) terminal (1) to the positive (+) terminal in your vehicle's battery (2), marked with a "+" sign.
3. Connect the auxiliary battery's negative (–) terminal (3) to the ground point in your vehicle's engine compartment near the driver's side spring strut (4).
4. Start the engine in the assisting vehicle, then start the engine in the vehicle with dead battery.
5. After the engine has started, first remove the negative (–) terminal jumper cable. Then remove the positive (+) terminal jumper cable.

WARNING

PROPOSITION 65 WARNING!

Battery posts, terminals, and related accessories contain lead and lead compounds, chemicals known to the state of California to cause cancer and reproductive harm. Wash hands after handling.

WARNING

- Do not connect the jumper cable to any part of the fuel system or to any moving parts. Avoid touching hot manifolds.
- Batteries generate hydrogen gas, which is flammable and explosive.
- Battery fluid contains sulfuric acid. Do not allow battery fluid to contact eyes, skin, fabrics or painted surfaces. If contact occurs, flush the affected area immediately with water. Obtain medical help immediately if eyes are affected.
- Never expose the battery to open flame or electric spark.
- Do not smoke near the battery.
- Failure to follow the instructions for jump starting can lead to personal injury.
- Do not touch the jumper cables during the attempt to start the vehicle. This could cause sparks.

Towing a trailer

General information

- Volvo recommends the use of Volvo trailer hitches that are specially designed for the vehicle.

Maximum trailer weights recommended by Volvo are:

- **Trailers without brakes**: 1,540 lbs (700 kg).
- **Trailers with brakes**: 2,000 lbs (900 kg) Observe the legal requirements of the state/province in which the vehicles are registered.
- **The maximum recommended hitch tongue load** is 165 lbs (75 kg).
- All Volvo models are equipped with energy-absorbing shock-mounted bumpers. Trailer hitch installation should not interfere with the proper operation of this bumper system.

Trailer towing does not normally present any particular problems, but take into consideration:

- Increase tire pressure to recommended full. See the chapter "Wheels and tires."
- When your vehicle is new, avoid towing heavy trailers during the first 620 miles (1,000 km).
- Maximum speed when towing a trailer: 50 mph (80 km/h).
- Engine and transmission are subject to increased loads. Therefore, engine coolant temperature should be closely watched when driving in hot climates or hilly terrain. Use a lower gear and turn off the air conditioner if the temperature gauge needle enters the red range.
- If the automatic transmission begins to overheat, a message will be displayed in the information display.
- Avoid overload and other abusive operation.
- Hauling a trailer affects handling, durability, and economy.
- It is necessary to balance trailer brakes with the towing vehicle brakes to provide a safe stop (check and observe state/local regulations).
- Do not connect the trailer's brake system directly to the vehicle's brake system.
- More frequent vehicle maintenance is required.
- Remove the ball and drawbar assembly when the hitch is not being used.
- Volvo recommends the use of synthetic engine oil when towing a trailer over long distances or in mountainous areas.

WARNING

- Bumper-attached trailer hitches must not be used on Volvos, nor should safety chains be attached to the bumper.
- Trailer hitches attaching to the vehicle's rear axle must not be used.
- Never connect a trailer's hydraulic brake system directly to the vehicle brake system, nor a trailer's lighting system directly to the vehicle lighting system. Consult your nearest trained and qualified Volvo service technician for correct installation.
- When towing a trailer, the trailer's safety wire must be correctly fastened to the hole or hook provided in the trailer hitch on the vehicle. The safety wire should never be fastened to or wound around the drawbar ball.

NOTE

- When parking the vehicle with a trailer on a hill, apply the parking brake before putting the gear selector in Park (**P**) or in reverse on models with a manual transmission. Always follow the trailer manufacturer's recommendations for wheel chocking.
- If you use the manual (Geartronic) shift positions while towing a trailer, or if the vehicle is equipped with a manual transmission, make sure the gear you select does not put too much strain on the engine (using too high a gear).
- The drawbar assembly/trailer hitch may be rated for trailers heavier than the vehicle is designed to tow. Please adhere to Volvo's recommended trailer weights.
- Avoid driving with a trailer on inclines exceeding 15%.

Detachable trailer hitch

Installing the ball holder

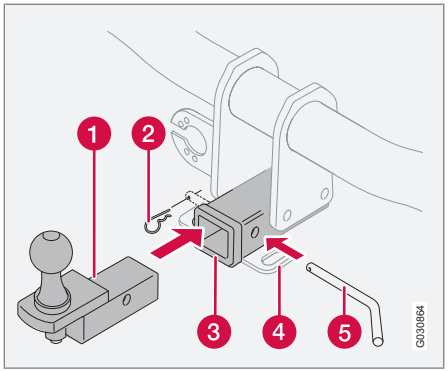

1. Ball holder
2. Cotter pin
3. Hitch assembly
4. Safety wire attachment
5. Locking bolt

1. If necessary, remove the cotter pin from the locking bolt and slide the locking bolt out of the hitch assembly.
2. Slide the ball holder into the hitch assembly.
3. Align the hole in the ball holder with the one in the hitch assembly.
4. Slide the locking bolt through the hitch assembly/ball holder.
5. Insert the cotter pin in the hole at the end of the locking bolt.

Removing the ball holder

1. Remove the cotter pin from the locking bolt and slide the locking bolt out of the ball holder/hitch assembly.
2. Pull the ball holder out of the hitch assembly.

NOTE

A cover for the hitch assembly is also included in the kit.

Loading the vehicle

Your vehicle's load-carrying capacity is affected by factors such as:

- the number of passengers
- tire inflation
- the amount of optional or accessory equipment installed
- the amount of cargo.

See the chapter "Wheels and tires" for more detailed information.

Before loading the car, turn off the engine, and apply the parking brake when loading or unloading long objects. The gear selector can be inadvertently knocked out of position by long cargo, causing the car to move.

Keep the following in mind when loading the vehicle:

- Load objects in the trunk against the rear seat backrest.
- Load heavy cargo as low as possible.
- Center wide loads.
- Secure all cargo with restraining straps anchored to the load securing eyelets.
- Cover sharp edges on the load.

WARNING

- Remember that an object weighing 44 lbs (20 kg) produces a force of 2,200 lbs (1,000 kg) in a head-on collision at 30 mph (50 km/h)!
- When the rear backrest(s) are folded down, the vehicle should not be loaded to a level higher than 2 in. (5 cm) below the upper edge of the rear side windows. Objects placed higher than this level could impede the function of the Volvo Inflatable Curtain.

Blind Spot Information System (BLIS)*

Introduction

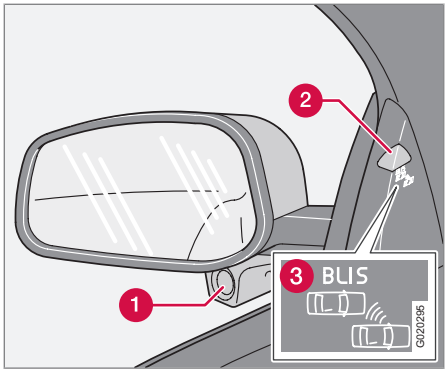

1. BLIS camera
2. Indicator light
3. BLIS symbol

The Blind Spot Information System (BLIS) is an information system that indicates the presence of another vehicle moving in the same direction as your vehicle in the side-view mirror's "blind area".

CAUTION

The BLIS system should only be repaired by a trained and qualified Volvo service technician.

WARNING

- BLIS is an information system, NOT a warning or safety system.
- BLIS does not eliminate the need for you to visually confirm the conditions around you, and the need for you to turn your head and shoulders to make sure that you can safely change lanes.
- As the driver, you have full responsibility for changing lanes in a safe manner.

The system is based on digital camera technology. The cameras (1) are located beneath the side-view mirrors.

When one (or both) of the cameras have detected a vehicle in the blind area (up to approximately 10 ft. (3 meters) from the side of your vehicle, and up to approximately 31 ft. (9.5 meters) behind the side-view mirror), the indicator light in the door panel (2) illuminates. The light will glow continuously to alert the driver of the vehicle in the blind area.

NOTE

The door panel indicator light illuminates on the side of the vehicle where the system has detected another vehicle. If your vehicle is passed on both sides at the same time, both lights will illuminate.

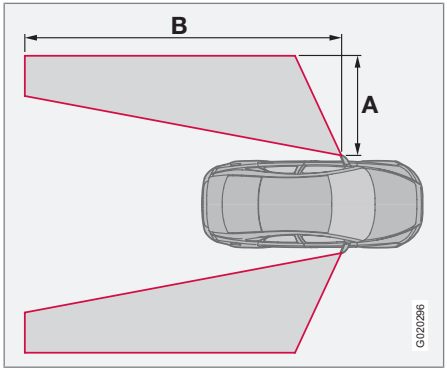

A = approx. 10 ft. (3 meters), B = approx. 31 ft. (9.5 meters)

BLIS has an integrated function that alerts the driver if a fault should occur with the system. For example, if one or both of the system's cameras are obscured, a message (see the table on page 165) will appear in the information display in the instrument panel. If this occurs, clean the camera lenses. If necessary, the system can be temporarily switched off (for instructions see page 164).

* Option/accessory, for more information, see Introduction.

When does BLIS function

The system functions when your vehicle is moving at speeds above 6 mph (10 km/h).

When you pass another vehicle:

The system reacts when you pass another vehicle at a speed of up to 6 mph (10 km/h) faster than that vehicle.

When you are passed by another vehicle:

The system reacts if your vehicle is passed by another vehicle at a speed of up to 43 mph (70 km/h) faster than your vehicle.

WARNING

- BLIS does not function in sharp curves.
- BLIS does not function when your vehicle is backing up.
- If you are towing a wide trailer, this may prevent the BLIS cameras from detecting other vehicles in adjacent lanes.

How BLIS functions in daylight and darkness

Daylight

BLIS reacts to the **shape** of surrounding vehicles. The system is designed to help detect motor vehicles such as cars, trucks, buses, motorcycles, etc.

Darkness

BLIS reacts to the **headlights** of surrounding vehicles. In order to be detected by BLIS, a vehicle in the blind area must have its headlights on. This means, for example, that the system will not detect a trailer without headlights that is being towed behind a car or truck.

WARNING

- BLIS does not react to cyclists or mopeds.
- BLIS does not react to vehicles that are standing still.
- The function of the BLIS cameras may be affected by intense light, or when driving at night in areas where there are no external sources of light (e.g., street lights, other vehicles, etc.). In such cases, the system may react as if the cameras were obscured.
- In both of the above mentioned conditions, a message will appear in the information display.
- When driving in such conditions, the system's function will be limited or it may be temporarily switched off, see page 164 for instructions.
- When the message is no longer displayed, BLIS will return to normal function.
- The BLIS cameras have the same limitation as the human eye. In other words, their "vision is impaired" by adverse weather conditions such as heavy snowfall, dense fog, etc.

Blind Spot Information System (BLIS)*

Limitations

In certain situations, the BLIS indicator light(s) may illuminate even when there are no other vehicles in the area monitored by the system.

NOTE

If the BLIS indicator lights illuminate occasionally even when there are no other vehicles in the blind area, this does not indicate a fault in the system.

In the event of a fault, **Blind spot syst. service required** will be displayed.

The following are several examples of situations in which the BLIS indicator light(s) may illuminate even when there are no other vehicles in the area monitored by the system.

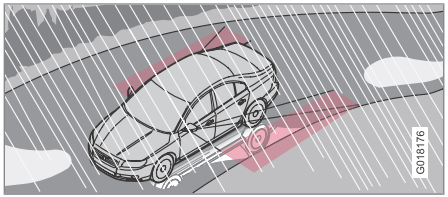

Light reflected from a wet road surface

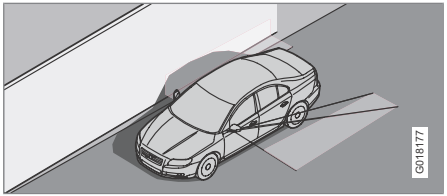

The vehicle's own shadow against a large, light, smooth surface such as barriers between lanes on a highway

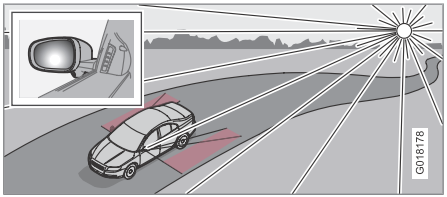

Sunlight directly in the camera when the sun is low on the horizon

Cleaning the BLIS camera lenses

In order to function optimally, the BLIS camera lenses must be kept clean. They can be wiped clean with a soft cloth or wet sponge.

CAUTION

- Clean the lenses carefully to avoid scratching.
- The lenses are electrically heated to help melt ice or snow. If necessary, gently brush away snow from the lenses.

Switching BLIS on and off

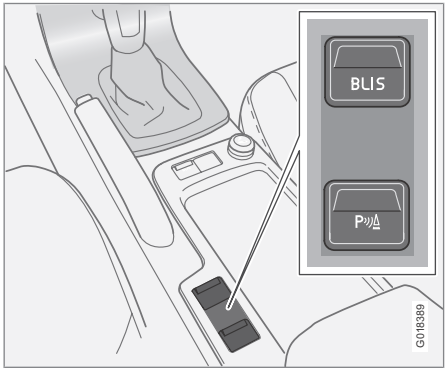

BLIS button (forward button in the illustration)

BLIS is automatically activated when the ignition is switched on. The indicator lights will provide confirmation by flashing 3 times.

- The system can be switched off by pressing the **BLIS** button in the center console. The indicator light in the button goes out

* Option/accessory, for more information, see Introduction.

when the system is switched off, and a text message is displayed.

- BLIS can be switched on again by pressing the button. The indicator light in the button will illuminate and a new text message will be displayed. Press the **READ** button, see page 56, to erase the message.

BLIS system messages

Text in the display	System status
BLIS service required	BLIS not functioning properly. Contact an authorized Volvo service technician.
BLIS camera blocked	BLIS camera obscured. Clean the lenses.
BLIS ON	BLIS system on
BLIS OFF	BLIS system off
BLIS reduced function	The BLIS cameras' function has been reduced by e.g., fog, or strong sunlight directly into the camera. The camera will reset itself when these conditions have changed.

Park assist*

Introduction

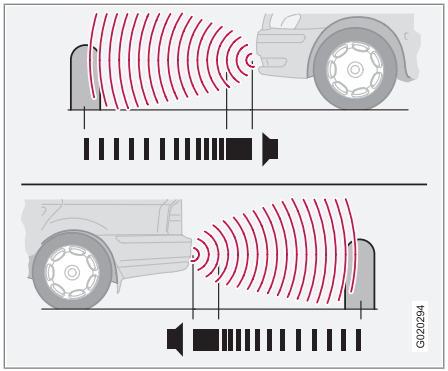

Front/rear park assist

The park assist system is designed to assist you when driving into parking spaces, garages, etc. It utilizes four ultrasound sensors located in one or both bumpers to measure the distance to a vehicle, object or a person who may be close to the front or rear of your vehicle.

Park assist is available in two versions:

- Rear bumper only
- Front and rear bumpers

WARNING

Park Assist is an information system, NOT a safety system. This system is designed to be a supplementary aid when parking the vehicle. It is not, however, intended to replace the driver's attention and judgement.

Function

The system is activated automatically when the vehicle is started. The indicator light in the button in the center console illuminates.

- The front park assist system is active from the time the engine is started until the vehicle exceeds a speed of approximately 10 mph (15 km/h). It is also active when the vehicle is backing up.
- Rear park assist is active when the engine is running and reverse gear has been selected.

Rear park assist

The distance monitored behind the vehicle is approximately 5 ft (1.5 m). The signal comes from the rear speakers.

The system must be deactivated when towing a trailer, carrying bicycles in a rear-mounted carrier, etc, which could trigger the rear park assist system's sensors.

NOTE

Rear park assist is deactivated automatically when towing a trailer if Volvo genuine trailer wiring is used.

Front park assist

The distance monitored in front of the vehicle is approximately 2.5 ft (0.8 m). The audible signal comes from the audio system's front speakers.

It may not be possible to combine auxiliary headlights and front park assist since these lights could trigger the system's sensors.

* Option/accessory, for more information, see Introduction.

Activating/deactivating park assist

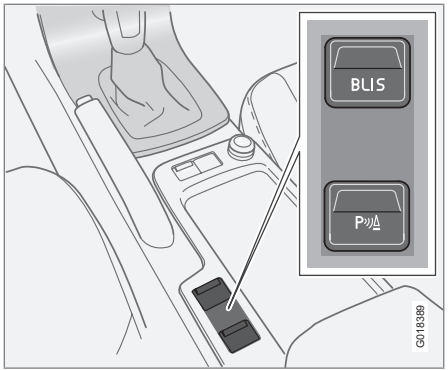

Park Assist button (rear button in the illustration)

The system is activated automatically when the vehicle is started.

– Press the Park assist button on the center console to temporarily deactivate the system(s). The indicator light in the button will go out when the system has been deactivated.

– Park assist will be automatically reactivated the next time the engine is started, or if the button is pressed (the indicator light in the button will illuminate).

NOTE

- Front park assist is disengaged automatically when the parking brake is applied.
- If the vehicle is equipped with front and rear park assist, both systems will be deactivated by pressing the button.

Audible signals from the park assist system

The Park Assist system uses an intermittent tone that pulses faster as you come close to an object, and becomes constant when you are within approximately 1 ft (30 cm) of an object in front of or behind the vehicle. If the volume of another source from the audio system is high, this will be automatically lowered.

If there are objects within this distance both behind and in front of the vehicle, the signal alternates between front and rear speakers.

Faults in the system

If the information symbol illuminates and **PARK ASSIST SERVICE REQUIRED** is shown on the information display, this indicates that the system is not functioning properly and has been disengaged. Consult a Volvo retailer or authorized Volvo service technician.

CAUTION

In certain circumstances, the park assist system may give unexpected warning signals that can be caused by external sound sources that use the same ultrasound frequencies as the system. This may include such things as the horns of other vehicles, wet tires on asphalt, pneumatic brakes, motorcycle exhaust pipes, etc. This does not indicate a fault in the system.

Park assist*

Cleaning the sensors

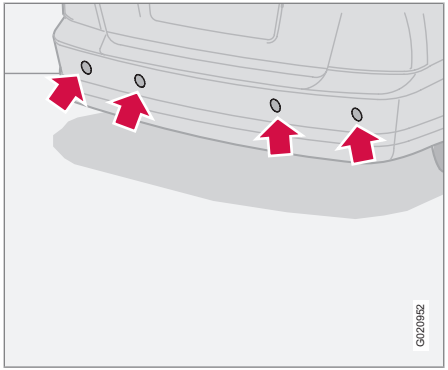

Park assist sensors

The sensors must be cleaned regularly to ensure that they work properly. Clean them with water and a suitable car washing detergent.

Ice and snow covering the sensors may cause incorrect warning signals.

NOTE

If the sensors are obstructed by e.g., dirt, snow, or ice, this could result in false warning signals from the park assist system.

* Option/accessory, for more information, see Introduction.

General information..... 172
Tire inflation..... 175
Inflation pressure—U.S. models 177
Inflation pressure—Canadian models 178
Tire designations..... 179
Glossary of tire terminology..... 181
Vehicle loading..... 182
Uniform tire quality gradings..... 184
Snow chains, snow tires, studded tires..... 185
Temporary spare..... 186
Wheel nuts..... 187
Changing a wheel..... 188
Tire Sealing System 190
Tire Pressure Monitoring System (TPMS)..... 195

G020918

WHEELS AND TIRES

07

General information

Introduction

Your vehicle is equipped with tires according to the vehicle's tire information placard on the B-pillar (the structural member at the side of the vehicle, at the rear of the driver's door opening), or on the inside of the fuel filler door on Canadian models.

CAUTION

Some Volvo models are equipped with an Ultra High Performance tire and wheel combination designed to provide maximum dry pavement performance with consideration for hydroplaning resistance. As such, they may be more susceptible to road hazard damage and, depending on driving conditions, may achieve a tread life of less than 20,000 miles (30,000 km). Even if this vehicle is equipped with Volvo's advanced DSTC system, these tires are not designed for winter driving, and should be replaced with winter tires when weather conditions dictate.

The tires have good road holding characteristics and offer good handling on dry and wet surfaces. It should be noted however that the tires have been developed to give these features on snow/ice-free surfaces.

Certain models are equipped with "all-season" tires, which provide a somewhat higher degree of road holding on slippery surfaces than tires without the "all-season" rating. However, for optimum road holding on icy or snow-covered roads, we recommend suitable winter tires on all four wheels.

When replacing tires, be sure that the new tires are the same size designation, type (radial) and preferably from the same manufacturer, on all four wheels. Otherwise there is a risk of altering the car's roadholding and handling characteristics.

New Tires

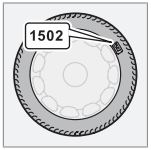

Remember that tires are perishable goods. As of 2000, the manufacturing week and year (Department of Transportation (DOT) stamp) will be indicated with 4 digits (e.g. 1502 means that the tire illustrated was manufactured during week 15 of 2002).

Tire age

Tires degrade over time, even when they are not being used. It is recommended that tires generally be replaced after 6 years of normal service. Heat caused by hot climates, frequent high loading conditions or Ultra Violet (U.V) exposure can accelerate the aging process.

You should replace the spare tire when you replace the other road tires due to the aging of the spare.

A tire's age can be determined by the DOT stamp on the sidewall (see the illustration).

A tire with e.g., visible cracks or discoloration should be replaced immediately.

Improving tire economy

- Maintain correct tire pressure. For the tire pressure tables, see page 177.
- Drive smoothly: avoid fast starts, hard braking and tire screeching.
- Tire wear increases with speed.
- Correct front wheel alignment is very important.
- Unbalanced wheels impair tire economy and driving comfort.
- Tires must maintain the same direction of rotation throughout their lifetime.
- When replacing tires, the tires with the most tread should be mounted on the rear wheels to reduce the chance of oversteer during hard braking.
- Hitting curbs or potholes can damage the tires and/or wheels permanently.

Summer and winter tires

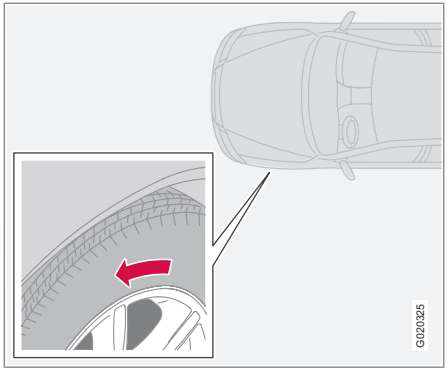

The arrows shows the direction of rotation of the tire

- When switching between summer and winter tires, mark the tires to indicate where they were mounted on the car, e.g., LF = left front, RR = right rear
- Tires with tread designed to roll in only one direction are marked with an arrow on the sidewall.
- Incorrectly mounted tires impair the car's braking properties and ability to force aside rain, snow and slush.
- The tires with the most tread should always be at the rear (to reduce the risk of skidding).
- Contact a Volvo workshop if you are unsure about the tread depth.

Storing wheels and tires

When storing complete wheels (tires mounted on rims), they should be suspended off the floor or placed on their sides on the floor.

Tires not mounted on rims should be stored on their sides or standing upright, but should not be suspended.

CAUTION

Tires should preferably be stored in a cool, dry, dark place, and should never be stored in close proximity to solvents, gasoline, oils, etc.

WARNING

- The wheel and tire sizes for your Volvo are specified to meet stringent stability and handling requirements. Unapproved wheel/tire size combinations can negatively affect your vehicle's stability and handling. Approved tire sizes are shown in the Tire inflation pressure tables, see page 177.
- Any damage caused by installation of unapproved wheel/tire size combinations will not be covered by your new vehicle warranty. Volvo assumes no responsibility for death, injury, or expenses that may result from such installations.

Tire wear

Tire rotation

Tire wear is affected by a number of factors such as tire inflation, ambient temperature, driving style, etc. Your vehicle is driven mainly by the front tires, which will wear faster.

If the tires are rotated, they should only be moved from front to back or vice versa. They should never be rotated left to right/right to left.

However, tire rotation, done at the recommended intervals, is one way of helping to keep

General information

tread wear as even as possible and will help you get maximum mileage from your tires.

Ideally, tire rotation should be done the first time after approximately 3,000 miles (5, 000 km) and thereafter at 6,000 mile (10,000 km) intervals.

Tire rotation should only be performed if front/rear tire wear is fairly even and tread height is above 1/16" (1.6 mm).

NOTE

Tire rotation is not included in regularly scheduled maintenance and is performed only at customer request, at additional charge.

Your Volvo retailer can also provide guidance based on your particular driving circumstances.

Tread wear indicator

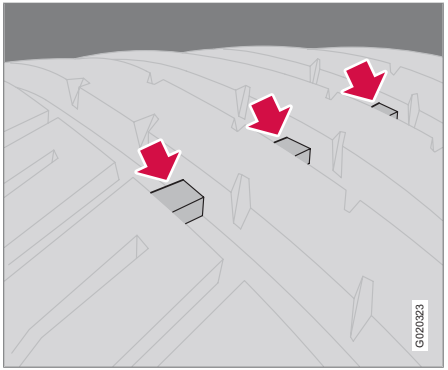

The tires have wear indicator strips running across or parallel to the tread. The letters **TWI** are printed on the side of the tire. When approximately 1/16" (1.6 mm) is left on the tread, these strips become visible and indicate that the tire should be replaced. Tires with less than 1/16" (1.6 mm) tread offer very poor traction.

When replacing worn tires, it is recommended that the tire be identical in type (radial) and size as the one being replaced. Using a tire of the same make (manufacturer) will prevent alteration of the driving characteristics of the vehicle.

Tire inflation

Inflation labels

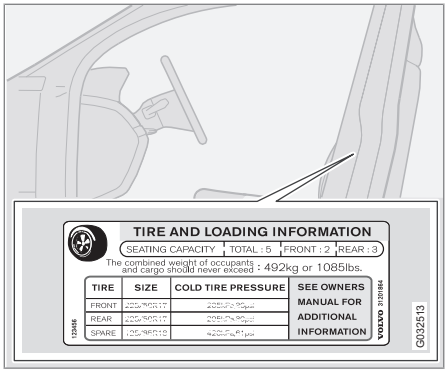

Tire inflation placard on U.S. models

Check tire inflation pressure regularly.

Tables listing the recommended inflation pressure for your vehicle can be found on page 177. A tire inflation pressure placard is also located on the driver's side B-pillar (the structural member at the side of the vehicle, at the rear of the driver's door opening). This placard indicates the designation of the factory-mounted tires on your vehicle, as well as load limits and inflation pressure.

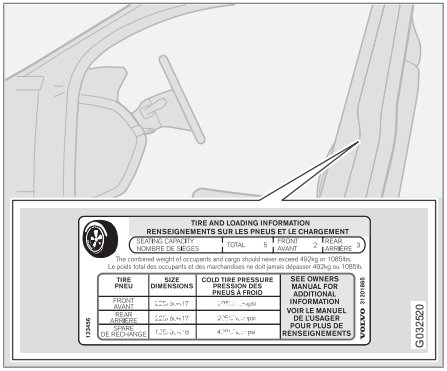

Tire inflation placard on Canadian models

NOTE

The placards shown indicate inflation pressure for the tires installed on the car at the factory only.

Use a tire gauge to check the tire inflation pressure, including the spare, at least once a month and before long trips. You are strongly urged to buy a reliable tire pressure gauge, as automatic service station gauges may be inaccurate.

Use the recommended cold inflation pressure for optimum tire performance and wear.

Under-inflation or over-inflation may cause uneven treadwear patterns.

WARNING

- Under-inflation is the most common cause of tire failure and may result in severe tire cracking, tread separation, or "blowout," with unexpected loss of vehicle control and increased risk of injury.
- Under-inflated tires reduce the load carrying capacity of your vehicle.

When weather temperature changes occur, tire inflation pressures also change. A 10-degree temperature drop causes a corresponding drop of 1 psi (7 kPa) in inflation pressure. Check your tire pressures frequently and adjust them to the proper pressure, which can be found on the vehicle's tire information placard or certification label.

Tire inflation

Checking tire pressure

Cold tires
Inflation pressure should be checked when the tires are cold.

The tires are considered to be cold when they have the same temperature as the surrounding (ambient) air.

This temperature is normally reached after the car has been parked for at least 3 hours.

After driving a distance of approximately 1 mile (1.6 km), the tires are considered to be hot. If you have to drive farther than this distance to pump your tire(s), check and record the tire pressure first and add the appropriate air pressure when you get to the pump.

If checking tire pressure when the tire is hot, never "bleed" or reduce air pressure. The tires are hot from driving and it is normal for pressures to increase above recommended cold pressures. A hot tire at or below recommended cold inflation pressure could be significantly under-inflated.

To check inflation pressure:

1. Remove the cap from the valve on one tire, then firmly press the tire gauge onto the valve.
2. Add air to reach the recommended air pressure
3. Replace the valve cap.
4. Repeat this procedure for each tire, including the spare.
5. Visually inspect the tires to make sure there are no nails or other objects embedded that could puncture the tire and cause an air leak.
6. Check the sidewalls to make sure there are no gouges, cuts, bulges or other irregularities.

NOTE

- If you overfill the tire, release air by pushing on the metal stem in the center of the valve. Then recheck the pressure with your tire gauge.
- Some spare tires require higher inflation pressure than the other tires. Consult the tire inflation tables, see page 177, or see the inflation pressure placard.

Load ratings
The load ratings in the tables above translate as follows:

91 = 1365 lbs (615 kg),

93 = 1433 lbs (650 kg),

99 = 1709 lbs (755 kg).

Speed ratings
The speed ratings in the tables translate as follows:

M = 81 mph (130 km/h),

V = 149 mph (240 km/h),

W = 168 mph (270 km/h).

See also page 179 for an explanation of the designations on the sidewall of the tire.

Tire inflation pressure table

The following tire pressures are recommended by Volvo for your vehicle. Refer to the tire inflation placard for information specific to the tires installed on your vehicle at the factory.

Tire size	Cold tire pressure up to four persons psi (kPa)	
	Front	Rear
235/45R17 94V M+S	36 (250)	36 (250)
235/40R18 91Y Extra Load M+S	36 (250)	36 (250)
Temporary spare tire T125/85R16 99M	61 (420)	61 (420)

Inflation pressure—Canadian models

Tire inflation pressure table

The following tire pressures are recommended by Volvo for your vehicle. Refer to the tire inflation placard for information specific to the tires installed on your vehicle at the factory.

Tire size	Cold tire pressures Up to four persons psi (kPa)		Optional pressure Up to three persons[A] psi (kPa)	
	Front	Rear	Front	Rear
235/45 R17 94V M+S	36 (250)	36 (250)	30 (210)	30 (210)
235/40 R18 91Y	36 (250)	36 (250)	32 (220)	32 (220)
Temporary spare tire T125/85R16 99M	61 (420)	61 (420)	61 (420)	61 (420)

[A] Optional pressure may not be used for homologation of fuel consumption or emissions.

Tire designations

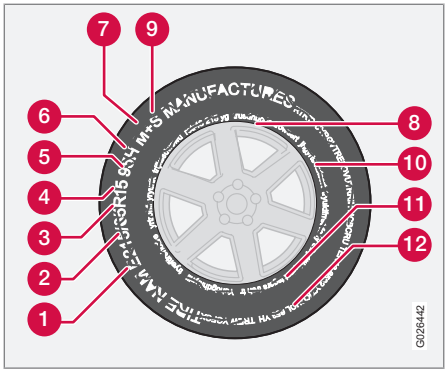

Federal law mandates that tire manufacturers place standardized information on the sidewall of all tires (see the illustration).

The following information is listed on the tire sidewall:

The tire designation:

NOTE

Please be aware that the following tire designation is an **example only** and that this particular tire may not be available on your vehicle.

1. **215**: The width of the tire (in millimeters) from sidewall edge to sidewall edge. The larger the number, the wider the tire.
2. **65**: The ratio of the tire's height to its width.
3. **R**: Radial tire.
4. **15**: The diameter of the wheel rim (in inches).
5. **95**: The tire's load index. In this example, a load index of 95 equals a maximum load of 1521 lbs (690 kg).
6. **H**: The tire's speed rating, or the maximum speed at which the tire is designed to be driven for extended periods of time, carrying a permissible load for the vehicle, and with correct inflation pressure. For example, H indicates a speed rating of 130 mph (210 km/h).

NOTE

This information may not appear on the tire because it is not required by law.

7. **M+S or M/S** = Mud and Snow, **AT** = All Terrain, **AS** = All Season
8. **U.S. DOT Tire Identification Number (TIN):** This begins with the letters "DOT" and indicates that the tire meets all federal standards. The next two numbers or letters are the plant code where it was manufactured, the next two are the tire size code and the last four numbers represent the week and year the tire was built. For example, 2501 means the 25th week of 2001. The numbers in between are marketing codes used at the manufacturer's discretion. This information helps a tire manufacturer identify a tire for safety recall purposes.
9. Tire Ply Composition and Material Used: Indicates the number of plies indicates or the number of layers of rubber-coated fabric in the tire tread and sidewall. Tire manufacturers also must indicate the ply materials in the tire and the sidewall, which include steel, nylon, polyester, and others.
10. **Maximum Load:** Indicates the maximum load in pounds and kilograms that can be carried by the tire. Refer to the vehicle's tire information placard located on the B-Pillar or the driver's door for the correct tire pressure for your vehicle.

Tire designations

11 **Treadwear, Traction, and Temperature grades:** See page 184 for more information.

12 **Maximum permissible inflation pressure:** The greatest amount of air pressure that should ever be put in the tire. This limit is set by the tire manufacturer.

The tire suppliers may have additional markings, notes or warnings such as standard load, radial tubeless, etc.

Terminology

- **Tire information placard**: A placard showing the OE (Original Equipment) tire sizes, recommended inflation pressure, and the maximum weight the vehicle can carry.
- **Tire Identification Number (TIN)**: A number on the sidewall of each tire providing information about the tire brand and manufacturing plant, tire size and date of manufacturer.
- **Inflation pressure**: A measure of the amount of air in a tire.
- **Standard load**: A class of P-metric or Metric tires designed to carry a maximum load at 35 psi [37 psi (2.5 bar) for Metric tires]. Increasing the inflation pressure beyond this pressure will not increase the tires load carrying capability.
- **Extra load**: A class of P-metric or Metric tires designed to carry a heavier maximum load at 41 psi [43 psi (2.9 bar) for Metric tires]. Increasing the inflation pressure beyond this pressure will not increase the tires load carrying capability.
- **kPa**: Kilopascal, a metric unit of air pressure.
- **PSI**: Pounds per square inch, a standard unit of air pressure.
- **B-pillar**: The structural member at the side of the vehicle behind the front door.
- **Bead area of the tire**: Area of the tire next to the rim.
- **Sidewall of the tire**: Area between the bead area and the tread.
- **Tread area of the tire**: Area of the perimeter of the tire that contacts the road when mounted on the vehicle.
- **Rim**: The metal support (wheel) for a tire or a tire and tube assembly upon which the tire beads are seated.
- **Maximum load rating**: a figure indicating the maximum load in pounds and kilograms that can be carried by the tire. This rating is established by the tire manufacturer.
- **Maximum permissible inflation pressure**: the greatest amount of air pressure that should ever be put in the tire. This limit is set by the tire manufacturer.
- **Recommended tire inflation pressure**: inflation pressure, established by Volvo, which is based on the type of tires that are mounted on a vehicle at the factory. This inflation pressure is affected by the number of occupants in the car, the amount of cargo, and the speed at which the vehicle will be driven for a prolonged period. This information can be found on the tire inflation placard(s) located on the driver's side B-pillar and in the tire inflation table in this chapter.
- **Cold tires**: The tires are considered to be cold when they have the same temperature as the surrounding (ambient) air. This temperature is normally reached after the car has been parked for at least 3 hours.

Properly loading your vehicle will provide maximum return of vehicle design performance.

Vehicle loading

Loading the vehicle

Before loading your vehicle, familiarize yourself with the following terms for determining your vehicle's weight ratings, with or without a trailer, from the vehicle's Federal/Canadian Motor Vehicle Safety Standards (FMVSS/CMVSS) label, and the vehicle's tire information placard:

Curb weight
The weight of the vehicle including a full tank of fuel and all standard equipment. It does not include passengers, cargo, or optional equipment.

Capacity weight
All weight added to the curb weight, including cargo and optional equipment. When towing, trailer hitch tongue load is also part of cargo weight.

NOTE

For trailer towing information, please refer to the section "Towing a trailer", see page 158.

Permissible axle weight
The maximum allowable weight that can be carried by a single axle (front or rear). These numbers are shown on the Federal/Canadian Motor Vehicle Safety Standards (FMVSS/CMVSS) label. The total load on each axle must never exceed its maximum permissible weight.

Gross vehicle weight (GVW)
The vehicle's curb weight + cargo + passengers.

NOTE

- The location of the various labels in your vehicle can be found on page 264.
- A table listing important weight limits for your vehicle can be found on page 267.

Steps for Determining Correct Load Limit

1. Locate the statement "the combined weight of occupants and cargo should never exceed XXX pounds" on your vehicle's placard.
2. Determine the combined weight of the driver and passengers that will be riding in your vehicle.
3. Subtract the combined weight of the driver and passengers from XXX kilograms or XXX pounds.
4. The resulting figure equals the available amount of cargo and luggage load capacity. For example, if the "XXX" amount equals 1400 lbs. and there will be five 150 lbs. passengers in your vehicle, the amount of available cargo and luggage load capacity is 650 lbs. (1400–750 (5×150) = 650 lbs.)
5. Determine the combined weight of luggage and cargo being loaded on the vehicle. That weight may not safely exceed the available cargo and luggage load capacity calculated in Step 4.
6. If your vehicle will be towing a trailer, load from your trailer will be transferred to your vehicle. Consult this manual[1] to determine how this reduces the available cargo and luggage load capacity of your vehicle.

[1] See "Towing a trailer"

Vehicle loading

WARNING

- Exceeding the permissible axle weight, gross vehicle weight, or any other weight rating limits can cause tire overheating resulting in permanent deformation or catastrophic failure.
- Do not use replacement tires with lower load carrying capacities than the tires that were original equipment on the vehicle because this will lower the vehicle's GVW rating. Replacement tires with a higher limit than the originals do not increase the vehicle's GVW rating limitations.

Uniform tire quality gradings

Uniform tire quality gradings

ALL PASSENGER VEHICLE TIRES MUST CONFORM TO FEDERAL SAFETY REQUIREMENTS IN ADDITION TO THESE GRADES

Quality grades can be found, where applicable, on the tire sidewall between the tread shoulder and maximum section width. For example:

Treadwear 200 Traction AA

Temperature A

TREADWEAR

The treadwear grade is a comparative rating based on the wear rate of the tire when tested under controlled conditions on a specified government test course. For example, a tire graded 150 would wear one and one half (1 1/2) times as well on the government course as a tire graded 100. The relative performance of tires depends upon the actual conditions of their use, however, and many depart significantly from the norm due to variation in driving habits, maintenance practices and differences in road characteristics and climate.

TRACTION

The traction grades, from highest to lowest, are AA, A, B, and C, as measured under controlled conditions on specified government test surfaces of asphalt and concrete. A tire marked C may have poor traction performance. The traction grade assigned to this tire is based on braking (straight-ahead) traction tests and is not a measure of cornering (turning) traction.

WARNING

The traction grade assigned to this tire is based on braking (straight-ahead) traction tests and is not a measure of cornering (turning) traction.

TEMPERATURE

The temperature grades are AA (the highest), A, B, and C, representing the tire's resistance to the generation of heat and its ability to dissipate heat when tested under controlled conditions on a specified indoor laboratory test wheel. Sustained high temperature can cause the material of the tire to degenerate and reduce tire life, and excessive temperature can lead to sudden tire failure. The grade C corresponds to a minimum level of performance that all passenger vehicle tires must meet under the Federal Motor Safety Standard No. 109.
Grades B and A represent higher levels of performance on the laboratory test wheel than the minimum required by law.

WARNING

The temperature grade for this tire is established for a tire that is properly inflated and not overloaded. Excessive speed, underinflation, or excessive loading, either separately or in combination, can cause heat buildup and tire failure.

Snow chains

Snow chains can be used on your Volvo with the following restrictions:

- Snow chains should be installed on front wheels only. Use only Volvo approved snow chains.
- If accessory, aftermarket or "custom" tires and wheels are installed and are of a size different than the original tires and wheels, chains in some cases CANNOT be used. Sufficient clearances between chains and brakes, suspension and body components must be maintained.
- Some strap-on type chains will interfere with brake components and therefore CANNOT be used.

Consult your Volvo retailer for additional snow chain information.

CAUTION

- Check local regulations regarding the use of snow chains before installing.
- Always follow the chain manufacturer's installation instructions carefully. Install chains as tightly as possible and retighten periodically.
- Never exceed the chain manufacturer's specified maximum speed limit. (Under no circumstances should you exceed 31 mph (50 km/h).
- Avoid bumps, holes or sharp turns when driving with snow chains.
- The handling of the vehicle can be adversely affected when driving with chains. Avoid fast or sharp turns as well as locked wheel braking.

Snow tires, studded tires

Tires for winter use:

- Owners who live in or regularly commute through areas with sustained periods of snow or icy driving conditions are strongly advised to fit suitable winter tires to help retain the highest degree of traction.
- It is important to install winter tires on all four wheels to help retain traction during cornering, braking, and accelerating. Failure to do so could reduce traction to an unsafe level or adversely affect handling.
- Do not mix tires of different design as this could also negatively affect overall tire road grip.
- Winter tires wear more quickly on dry roads in warm weather. They should be removed when the winter driving season has ended.
- Studded tires should be run-in 300–600 miles (500–1000 km) during which the car should be driven as smoothly as possible to give the studs the opportunity to seat properly in the tires. The tires should have the same rotational direction throughout their entire lifetime.

NOTE

Please consult state or provincial regulations restricting the use of studded winter tires before installing such tires.

Temporary spare

Temporary spare

The spare tire in your vehicle[1] is called a "Temporary Spare".

Recommended tire pressure (see the placard on the B-pillar or on the fuel filler door) should be maintained irrespective of which position on the car the temporary spare tire is used.

In the event of damage to this tire, a new one can be purchased from your Volvo retailer.

WARNING

Current legislation prohibits the use of the "Temporary Spare" tire other than as a temporary replacement for a punctured tire. It must be replaced as soon as possible by a standard tire. Road holding and handling may be affected with the "Temporary Spare" in use. Do not exceed a speed of 50 mph (80 km/h) with the "Temporary Spare" in use.

CAUTION

The car must not be driven with wheels of different dimensions or with a spare tire other than the one that came with the car. The use of different size wheels can seriously damage your car's transmission.

[1] Not on models equipped with the Tire sealing system.

Wheel nuts

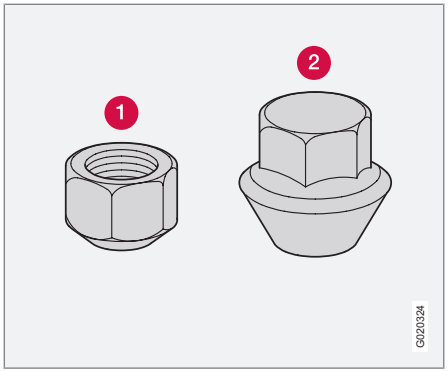

1 Low nut.

2 High nut.

There are two different types of wheel nut, depending on whether the wheels are steel or aluminum.

Steel rims – low nut

Steel rims are normally secured using the low type of nut, although steel rims may also use the high type.

WARNING

Never use the short type of nut for aluminium wheels. This could cause the wheel to come loose.

Aluminum wheels – high nut

Only the high type of nut can be used for aluminum wheels. This is considerably different from other types of nut because it has a rotating conical thrust washer.

NOTE

This nut can also be used on steel wheels.

Lockable wheel nut

If steel wheels with lockable wheel nuts are used in combination with wheel covers, the lockable wheel nut must be fitted to the stud nearest the air valve. The wheel cover cannot otherwise be installed on the wheel.

Changing a wheel

Changing a wheel

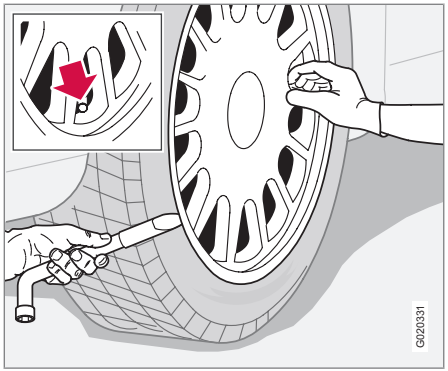

The spare tire, jack, and crank are located under the carpet on the floor of the trunk.

To change a tire:

1. Apply the parking brake.
2. Put the gear selector in Park (**P**) or reverse on models with a manual transmission.
3. Block the wheels that are on the ground with wooden blocks or large stones.
4. Remove the wheel cover (where applicable) using the lug wrench in the tool bag.

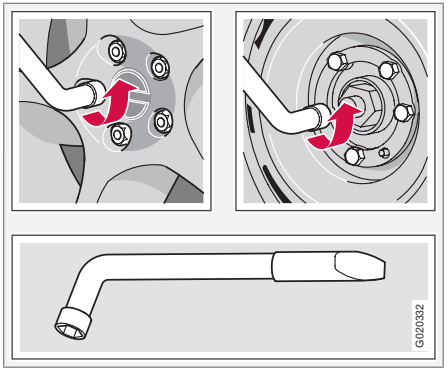

5. With the car still on the ground, use the lug wrench to loosen the wheel nuts 1/2–1 turn by exerting downward pressure. Turn the nuts counterclockwise to loosen.
6. There are two jack attachment points on each side of the car. Position the jack correctly in the attachment (see the illustration) and crank while simultaneously guiding the base of the jack to the ground. The base of the jack must be flat on a level, firm, non-slippery surface. Before raising the car, check that the jack is still correctly positioned in the attachment.

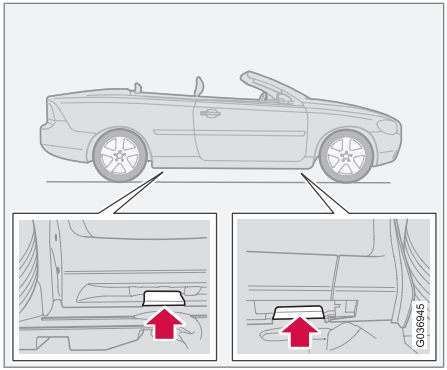

Jack attachment points

7. Raise the vehicle until the wheel to be changed is lifted off the ground.
8. Unscrew the wheel nuts completely and carefully remove the wheel so as not to damage the threads on the studs.

WARNING

- The jack must correctly engage the jack attachment.
- Be sure the jack is on a firm, level, non-slippery surface.
- Never allow any part of your body to be extended under a car supported by a jack.
- Use the jack intended for the car when changing a tire. For any other job, use stands to support the car.
- Apply the parking brake and put the gear selector in the Park (**P**) position or reverse on models with a manual transmission.
- Block the wheels standing on the ground, use rigid wooden blocks or large stones.
- The jack should be kept well-greased and clean, and should not be damaged.
- No objects should be placed between the base of jack and the ground, or between the jack and the attachment bar on the vehicle.

Installing the wheel

1. Clean the contact surfaces on the wheel and hub.
2. Lift the wheel and place it on the hub.
3. Install the wheel nuts and tighten hand-tight. Using the lug wrench, tighten cross-wise until all nuts are snug.
4. Lower the vehicle to the ground and alternately tighten the bolts crosswise to 81 ft. lbs. (110 Nm).
5. Install the wheel cover (where applicable).

Returning the jack to its storage space

The jack (certain models) and tools should be returned to their correct storage places after use.

- On vehicles equipped with a jack and spare wheel, the jack should be cranked down and returned to its storage position after use.
- On vehicles equipped with the tire sealing system, the jack should be cranked down as far as possible and returned to its storage position in the foam block.

WARNING

The jack and any tools should always be returned to their proper storage compartments after use to help keep them securely in place in the event of sudden braking, etc.

Tire Sealing System

Introduction

Certain models are equipped with a tire sealing system* that enables you to temporarily seal a hole in the tread surface and re-inflate a flat tire, or to adjust a tire's inflation pressure.

The system consists of an air compressor, a container for the sealing compound, wiring to connect the system to the vehicle's electrical system via one of the 12-volt sockets, and a hose used to connect the system to the tire's inflation valve.

The 12-volt socket is located in the front tunnel console.

Accessing the tire sealing system

The tire sealing system is stowed in the compartment in the rear side of the ski hatch in the center of the rear seat backrest. See page 115 for information on opening this hatch.

1. Lift the floor hatch in the trunk.
2. Lift out the tire sealing system.

NOTE

- The tire sealing system is only intended to seal holes on the tire's tread area, not the sidewall.
- Tires with large holes or tears cannot be repaired with the tire sealing system.
- After use, stow the tire sealing system properly to help prevent rattling.

WARNING

- After using the tire sealing system, the vehicle should not be driven farther than approximately 120 miles (200 km).
- Have the tire inspected by a trained and qualified Volvo service technician as soon as possible to determine if it can be permanently repaired or must be replaced.
- The vehicle should not be driven faster than 50 mph (80 km/h) while using a tire that has been temporarily repaired with the tire sealing system.
- After using the tire sealing system, drive carefully and avoid abrupt steering maneuvers and sudden stops.

Tire sealing system–overview

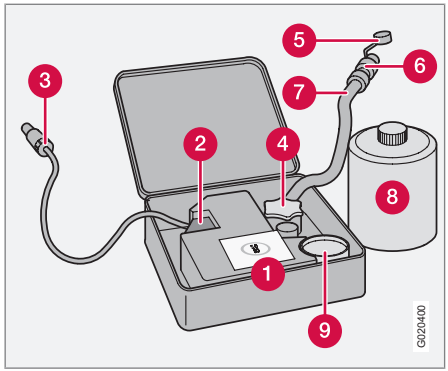

1. Speed limit sticker
2. On/Off switch
3. Electrical wire
4. Bottle holder (orange cover)
5. Protective hose cover
6. Air release knob
7. Hose
8. Bottle with sealing compound
9. Air pressure gauge

* Option/accessory, for more information, see Introduction.

WARNING

Please keep the following points in mind when using the tire sealing system:

- The sealing compound bottle (no. 8 in the illustration) contains 1.2-Ethanol and natural rubber-latex. These substances are harmful if swallowed.
- The contents of this bottle may cause allergic skin reactions or otherwise be potentially harmful to the skin, the central nervous system, and the eyes.

Precautions:

- Keep out of reach of children.
- Do not ingest the contents.
- Avoid prolonged or repeated contact with the skin.
- Hands should be washed thoroughly after handling.

First aid:

- Skin: Wash affected areas of skin with soap and water. Get medical attention if symptoms occur.
- Eyes: Flush with plenty of water for least 15 minutes, occasionally lifting the upper and lower eyelids. Get medical attention if symptoms occur.
- Inhalation: Move the person to fresh air. If irritation persists, get medical attention.

Tire sealing system–temporarily repairing a flat tire

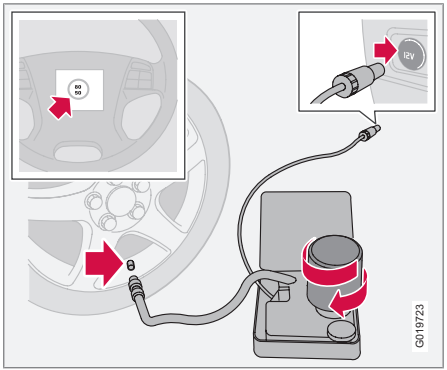

Temporarily repairing a flat tire is done in two stages:

- **Stage 1:** The hole is sealed by pumping sealing compound into the tire. The car is then driven a short distance to distribute the sealing compound in the tire.

NOTE

Do not remove any foreign objects (nails, etc.) from the tire before using the sealing system.

- **Stage 2:** The tire's inflation pressure is checked and adjusted if necessary.

WARNING

- Never leave the tire sealing system unattended when it is operating.
- Keep the tire sealing system away from children.
- Be sure the vehicle is parked safely off the road and away from moving traffic.
- Apply the parking brake.

Stage 1: Sealing the hole

1. Open the cover on the tire sealing kit.
2. Peel off the speed limit sticker and affix it to the steering wheel hub where it will be clearly visible to the driver.
3. Ensure that the on/off switch is in position **0** (the **0** side of the switch should be pressed down).

Tire Sealing System

4. Put on the gloves included in the tire sealing system.

WARNING

Contact with the sealing compound may cause skin irritation. If contact occurs, wash the affected area immediately with soap and water.

5. Unscrew the orange cover over the bottle holder and unscrew the cap on the bottle of sealing compound.

NOTE

Do not break the seal on the bottle. This occurs automatically when the bottle is screwed into the holder.

6. Screw the bottle into the bottle holder.

WARNING

The bottle is equipped with a catch to keep it securely in place and help prevent sealing compound leakage. Once in place, the bottle cannot be unscrewed. This must be done by a trained and qualified Volvo service technician.

7. Remove the valve cap from the tire's inflation valve and screw the tire sealing system's hose connector onto the valve as tightly as possible by hand.
8. Connect the electrical wire to the nearest 12-volt socket in the vehicle.
9. Start the vehicle's engine.
10. Start the tire sealing system's compressor by pressing the on/off switch to position **I**.

WARNING

- Never stand next to the tire being inflated when the compressor is in operation.
- If cracks, bubbles, etc. form on the tire, switch off the compressor immediately.
- If there is visible damage to the sidewall or the rim, the tire cannot be repaired. The vehicle should not be driven if this occurs. Contact a towing service or Volvo On Call Roadside Assistance if applicable.

NOTE

The air pressure gauge will temporarily show an increase in pressure to approximately 88 psi (6 bar) while the sealing compound is being pumped into the tire. The pressure should return to a normal level after approximately 30 seconds.

11. Within seven minutes, inflate the tire to between 22—44 psi (1.8—3.0 bar). Switch off the compressor briefly to get a clear reading from the pressure gauge. The compressor should not be used for more than 10 minutes at a time to avoid overheating.

CAUTION

The compressor should not be used for more than 10 minutes at a time to avoid overheating.

WARNING

If the pressure remains below 22 psi (1.8 bar) after approximately seven minutes, turn off the compressor. In this case, the hole is too large to be sealed and the vehicle should not be driven.

12. Switch off the compressor and disconnect the electrical wire from the 12-volt socket.
13. Unscrew the hose from the tire's inflation valve and reinstall the valve cap.
14. Immediately drive the vehicle for approximately 2 miles (3 km) at a maximum speed of 50 mph (80 km/h) to distribute the sealing compound in the tire.

CAUTION

If your vehicle is equipped with the Tire Pressure Monitoring System (TPMS), the use of the sealing compound may lead to incorrect tire pressure readings or in rare cases, damage to the tire pressure sensor. Use the tire sealing system to check and adjust the damaged tire's inflation pressure.

NOTE

- Safely stow the tire sealing system in a convenient place as it will soon be used again to check the tire's inflation pressure.
- The empty bottle of sealing compound cannot be removed from the bottle holder. Consult a trained and qualified Volvo service technician to have the bottle removed and properly disposed of.

WARNING

If heavy vibrations, unsteady steering behavior, or noises should occur while driving, reduce speed and park the vehicle in a safe place. Recheck the tire for bumps, cracks, or other visible damage, and recheck its inflation pressure. If the pressure is below 19 psi (1.3 bar), do not continue driving. Have the vehicle towed to a trained and qualified Volvo service technician.

Stage 2: Checking inflation pressure

1. Connect the tire sealing system as described in **stage 1**.
2. Refer to the inflation pressure tables for the correct inflation pressure. If the tire needs to be inflated, start the tire sealing system's compressor. If necessary, release air from the tire by turning the air release knob counterclockwise.

CAUTION

The compressor should not be used for more than 10 minutes at a time to avoid overheating.

WARNING

If you interrupt your trip for more than 1 hour, check the inflation pressure in the damaged tire again before continuing.

Replacing the sealing compound container

The sealing compound container must be replaced if:

- the tire sealing system has been used to repair a tire
- the container's expiration date has passed (see the date on decal).

NOTE

- After use, the sealing compound bottle, the hose, and certain other system components must be replaced. Please consult your Volvo retailer for replacement parts.
- If the sealing compound bottle's expiration date has passed, please take it to a Volvo retailer or a recycling station that can properly dispose of harmful substances.

Tire Sealing System

Inflating tires

The tire sealing system can be used to inflate the tires. To do so:

1. Park the car in a safe place.
2. The compressor should be switched off. Ensure that the on/off switch is in position **0** (the **0** side of the switch should be pressed down).
3. Take out the electrical wire and hose.
4. Remove the valve cap from the tire's inflation valve and screw the hose connector onto the valve as tightly as possible by hand.
5. Connect the electrical wire to the nearest 12-volt socket in the vehicle.
6. Start the vehicle's engine.

WARNING

- The vehicle's engine should be running when the tire sealing system is used to avoid battery drain. Therefore, be sure the vehicle is parked in a well ventilated place, or outdoors, before using the system.
- Children should never be left unattended in the vehicle when the engine is running.

7. Check the tire's inflation pressure on the gauge. Switch off the compressor briefly to get a clear reading from the pressure gauge.
8. Refer to the tire inflation tables for the correct inflation pressure. If the tire needs to be inflated, start the tire sealing system's compressor (press the on/off switch to position I). If necessary, release air from the tire by turning the air release knob counterclockwise.

CAUTION

The compressor should not be used for more than 10 minutes at a time to avoid overheating.

9. Turn off the compressor (press the on/off switch to position **0**) when the correct inflation pressure has been reached.
10. Unscrew the hose from the tire's inflation valve and reinstall the valve cap.
11. Disconnect the electrical wire from the 12-volt socket.

Introduction

The tire pressure monitoring system uses sensors mounted in the tire valves to check inflation pressure levels. When the vehicle is moving at a speed of approximately 20 mph (30 km/h) or faster, these sensors transmit inflation pressure data to a receiver located in the vehicle.

NOTE

USA – FCC ID: KR5S122780002

This device complies with part 15 of the FCC rules. Operation is subject to the following conditions: (1) This device may not cause harmful interference, and (2) this device must accept any interference received, including interference that may cause undesired operation.

When low inflation pressure is detected, TPMS will light up the tire pressure warning light (also referred to as a telltale) in the instrument panel and will display one of the following messages in the text window: **LOW TIRE PRESS. CHECK TIRES** or **VERY LOW TIRE PRESSURE**.

NOTE

If a fault occurs in TPMS, the tire pressure warning light will flash for approximately 1 minute and **TIRE PRESS SYST SERVICE REQUIRED** will be displayed.

Each tire, including the spare (if provided), should be checked monthly when cold and inflated to the inflation pressure recommended by the vehicle manufacturer on the vehicle placard or tire inflation pressure label. (If your vehicle has tires of a different size than the size indicated on the vehicle placard or tire inflation pressure label, you should determine the proper tire inflation pressure for those tires.)

As an added safety feature, your vehicle has been equipped with a tire pressure monitoring system (TPMS) that illuminates a low tire pressure telltale when one or more of your tires is significantly under-inflated. Accordingly, when the low tire pressure telltale illuminates, you should stop and check your tires as soon as possible, and inflate them to the proper pressure. Driving on a significantly under-inflated tire causes the tire to overheat and can lead to tire failure. Under-inflation also reduces fuel efficiency and tire tread life, and may affect the vehicle's handling and stopping ability.

Please note that the TPMS is not a substitute for proper tire maintenance, and it is the driver's responsibility to maintain correct tire pressure, even if under-inflation has not reached the level to trigger illumination of the TPMS low tire pressure telltale.

Your vehicle has also been equipped with a TPMS malfunction indicator to indicate when the system is not operating properly. The TPMS malfunction indicator is combined with the low tire pressure telltale . When the system detects a malfunction, the telltale will flash for approximately one minute and then remain continuously illuminated. This sequence will continue upon subsequent vehicle start-ups as long as the malfunction exists. When the malfunction indicator is illuminated, the system may not be able to detect or signal low tire pressure as intended. TPMS malfunctions may occur for a variety of reasons, including the installation of replacement or alternate tires or wheels on the vehicle that prevent the TPMS from functioning properly. Always check the TPMS malfunction telltale after replacing one or more tires or wheels on your vehicle to ensure that the replacement or alternate tires and wheels allow the TPMS to continue to function properly.

Tire Pressure Monitoring System (TPMS)

NOTE

- TPMS indicates low tire pressure but does not replace normal tire maintenance. For information on correct tire pressure, please refer to the tables beginning on page 177, or consult your Volvo retailer.
- The tire pressure warning light will not identify which tire is underinflated. Be sure to check all four tires.
- A certain amount of air seepage from the tires occurs naturally and tire pressure fluctuates with seasonal changes in temperature. Always check tire pressure regularly.

Erasing warning messages

When a low tire pressure warning message has been displayed, and the tire pressure warning light has come on:

1. Use a tire pressure gauge to check the inflation pressure of all four tires.
2. Re-inflate the tire(s) to the correct pressure (consult the tire pressure placard or the tables, see page 177).
3. In certain cases, it may be necessary to drive the vehicle for several minutes at a speed of 20 mph (30 km/h) or faster. This will erase the warning text and the warning light will go out.

WARNING

Incorrect inflation pressure could lead to tire failure, resulting in a loss of control of the vehicle.

Changing wheels with TPMS

Please note the following when changing or replacing the factory installed TPMS wheels/tires on the vehicle:

- Only the factory-mounted wheels are equipped with TPMS sensors in the valves.
- If the vehicle is equipped with a temporary spare tire, this tire does not have a TPMS sensor.
- If wheels without TPMS sensors are mounted on the vehicle, **TIRE PRESS SYST SERVICE REQUIRED** will be displayed each time the vehicle is driven above 25 mph (40 km/h) for 10 minutes or more.
- Once TPMS sensors are properly installed, the warning message should not reappear. If the message is still displayed, drive the vehicle for several minutes at a speed of 20 mph (30 km/h) or faster to erase the message.
- Volvo recommends that TPMS sensors be fitted on all wheels used on the vehicle. Volvo does not recommend moving sensors back and forth between sets of wheels.

NOTE

- If you change to tires with a different recommended inflation pressure, the TPMS system must be recalibrated to these tires. This must be done by an authorized Volvo retailer or workshop.
- If a tire is changed, or if the TPMS sensor is moved to another wheel, the sensor's seal, nut, and valve core should be replaced.
- When installing TPMS sensors, the vehicle must be parked for at least 15 minutes with the ignition off. If the vehicle is driven within 15 minutes, a TPMS error message will be displayed.

CAUTION

When inflating tires with TPMS valves, press the pump's mouthpiece straight onto the valve to help avoid bending or otherwise damaging the valve.

Washing and cleaning the car..... 200
Paint touch up..... 204

G020920

CAR CARE

08

Washing and cleaning the car

Washing the car

The following points should be kept in mind when washing and cleaning the car:

- The car should be washed at regular intervals since dirt, dust, insects and tar spots adhere to the paint and may cause damage. To help prevent corrosion, it is particularly important to wash the car frequently in the wintertime when salt has been used on the roads.
- Avoid washing your car in direct sunlight. Doing so may cause detergents and wax to dry out and become abrasive. To avoid scratching, use lukewarm water to soften the dirt before you wash with a soft sponge, and plenty of sudsy water.
- **Bird droppings**: Remove from paintwork as soon as possible. Otherwise the finish may be permanently damaged.
- A detergent can be used to facilitate the softening of dirt and oil.
- Dry the car with a clean chamois and remember to clean the drain holes in the doors and rocker panels.
- Tar spots can be removed with tar remover after the car has been washed.
- A stiff-bristle brush and lukewarm soapy water can be used to clean the wiper blades. Frequent cleaning of the windshield and wiper blades improves visibility considerably and also helps prolong the service life of the wiper blades.
- Wash off the dirt from the underside (wheel housings, fenders, etc).
- In areas of high industrial fallout, more frequent washing is recommended.

NOTE

When washing the car, remember to remove dirt from the drain holes in the doors and sills.

Exterior components

Volvo recommends the use of special cleaning products, available at your Volvo retailer, for cleaning colored plastic, rubber, or ornamental components such as chromed strips on the exterior of your vehicle. The instructions for using these products should be followed carefully. Solvents or stain removers should not be used.

CAUTION

- Avoid waxing or polishing plastic or rubber components
- Polishing chromed strips can wear away or damage the surface
- Polishes containing abrasive substances should not be used

CAUTION

- During high pressure washing, the spray mouthpiece must never be closer to the vehicle than 13" (30 cm). Do not spray into the locks.
- Dirt, snow, etc., on the headlights can reduce lighting capacity considerably. Clean the headlights regularly, for example when refueling.
-

Automatic washing – simple and quick

We do NOT recommend washing your car in an automatic wash during the first six months (because the paint will not have hardened sufficiently).

An automatic wash is a simple and quick way to clean your car, but it is worth remembering that it may not be as thorough as when you yourself go over the car with sponge and water.

Keeping the underbody clean is most important, especially in the winter. Some automatic washers do not have facilities for washing the underbody.

CAUTION

- Before driving into an automatic car wash, turn off the optional rain sensor to avoid damaging the windshield wipers.
- Make sure that side view mirrors, auxiliary lamps, etc, are secure, and that any antenna(s) are retracted or removed. Otherwise there is risk of the machine dislodging them
- **Chromed wheels:** Clean chrome-plated wheels using the same detergents used for the body of the vehicle. Aggressive wheel-cleaning agents can permanently stain chrome-plated wheels.

WARNING

- When the car is driven immediately after being washed, apply the brakes several times in order to remove any moisture from the brake linings.
- Engine cleaning agents should not be used when the engine is warm. This constitutes a fire risk.

Exterior lighting

Condensation may form temporarily on the inside of the lenses of exterior lights such as headlights, fog lights, or taillights. This is normal and the lights are designed to withstand moisture. Normally, condensation will dissipate after the lights have been on for a short time.

Polishing and Waxing

- Normally, polishing is not required during the first year after delivery, however, waxing may be beneficial.
- Before applying polish or wax the vehicle must be washed and dried. Tar spots can be removed with kerosene or tar remover. Difficult spots may require a fine rubbing compound.
- After polishing use liquid or paste wax.
- Several commercially available products contain both polish and wax.
- Waxing alone does not substitute for polishing a dull surface.
- A wide range of polymer-based waxes can be purchased today. These waxes are easy to use and produce a long-lasting, high-gloss finish that protects the bodywork against oxidation, road dirt and fading.
- Do not polish or wax your vehicle in direct sunlight (the surface of the vehicle should not be warmer than 113 °F (45 °C).

CAUTION

Volvo does not recommend the use of long-life or durable paint protection coatings, some of which may claim to prevent pitting, fading, oxidation, etc. These coatings have not been tested by Volvo for compatibility with your vehicle's clear coat. Some of them may cause the clear coat to soften, crack, or cloud. Damage caused by application of paint protection coatings may not be covered under your vehicle's paint warranty.

Upholstery care

Fabric

Clean with soapy water or a detergent. For more difficult spots caused by oil, ice cream, shoe polish, grease, etc., use a clothing/fabric stain remover. Consult your Volvo retailer.

Interior plastic components

Cleaning interior plastic components should be done with a cleaning agent specially designed for this purpose. Consult your Volvo retailer.

Alcantera™ suede-like material

Suede-like upholstery can be cleaned with a soft cloth and mild soap solution.

Washing and cleaning the car

Leather care

Volvo's leather upholstery is manufactured with a protectant to repel soiling. Over time, sunlight, grease and dirt can break down the protection. Staining, cracking, scuffing, and fading can result.

Volvo offers an easy-to-use, non-greasy leather care kit formulated to clean and beautify your vehicle's leather, and to renew the protective qualities of its finish. The cleaner removes dirt and oil buildup. The light cream protectant restores a barrier against soil and sunlight.

Volvo also offers a special leather softener that should be applied after the cleaner and protectant. It leaves leather soft and smooth, and reduces friction between leather and other finishes in the vehicle.

Volvo recommends cleaning, protecting and conditioning your vehicle's leather two to four times a year. Ask your Volvo retailer about Leather Care Kit 951 0251 and Leather Softener 943 7429.

Cleaning leather upholstery

1. Pour leather cleaner on a damp sponge and squeeze it until the cleaner foams.
2. Apply the foam to the stain by moving the sponge with circular movements.
3. Dampen the stain thoroughly with the sponge. Let the sponge absorb the stain, do not rub.
4. Dry the stain with soft paper towels or a towel, and allow the leather to dry completely.

Protecting leather upholstery

1. Put a small amount of protectant cream on a cloth and apply a thin coating of cream to the upholstery with light circular movements.
2. Allow the leather to dry for 20 minutes.

This will help the leather resist staining and protect against sunlight's harmful UV rays.

CAUTION

- Under no circumstances should gasoline, naphtha or similar cleaning agents be used on the plastic or the leather since these can cause damage.
- Take extra care when removing stains such as ink or lipstick since the coloring can spread.
- Use solvents sparingly. Too much solvent can damage the seat padding.
- Start from the outside of the stain and work toward the center.
- Sharp objects (e.g. pencils or pens in a pocket) or Velcro fasteners on clothing may damage the textile upholstery.
- Clothing that is not colorfast, such as new jeans or suede garments, may stain the upholstery.

Cleaning the seat belts

Clean only with lukewarm water and a mild soap solution.

Cleaning floor mats

The floor mats should be vacuumed or brushed clean regularly, especially during winter when they should be taken out for drying. Spots on textile mats can be removed with a mild detergent. For best protection in winter, Volvo recommends the use of Volvo rubber floor mats. Consult your Volvo retailer.

Paint touch up

Touching up minor paint damage

Paint damage requires immediate attention to avoid rusting. Make it a habit to check the finish regularly - when washing the vehicle for instance. Touch-up if necessary.

Paint repairs require special equipment and skill. Contact a trained and authorized Volvo service technician for any extensive damage. Minor scratches can be repaired by using Volvo touch-up paint.

Color code

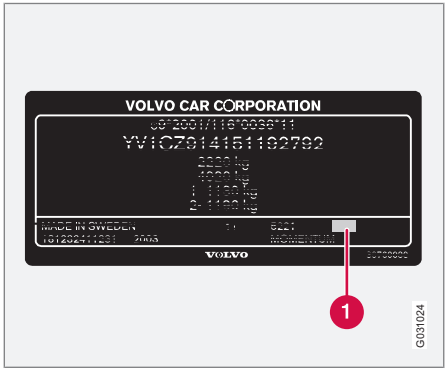

When ordering touch-up paint from your Volvo retailer, make sure you have the right color. Use the paint code indicated on the model plate (1 in the illustration).

Minor stone chips and scratches

Material:

- Primer – can
- Paint – touch-up pen
- Brush
- Masking tape

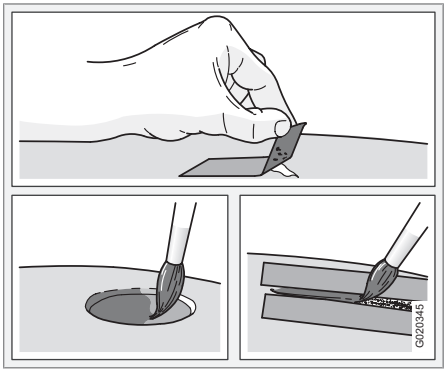

NOTE

When touching up the vehicle, it should be clean and dry. The surface temperature should be above 60° F (15° C).

If the stone chip has not penetrated down to the metal and an undamaged layer of paint remains, the touch-up paint can be applied as soon as the spot has been cleaned.

Deep scratches

1. Place a strip of masking tape over the damaged surface. Pull the tape off so that any loose flakes of paint adhere to it.
2. Thoroughly mix the primer and apply it with a small brush. When the primer surface is dry, the paint can be applied using a brush. Mix the paint thoroughly; apply several thin paint coats and let dry after each application.
3. If there is a longer scratch, you may want to protect surrounding paint by masking it off.

Volvo maintenance..... 208
Maintaining your car..... 210
Hood..... 212
Engine compartment..... 213
Engine oil..... 214
Fluids..... 216
Wiper blades..... 218
Battery..... 219
Replacing bulbs..... 221
Fuses..... 228

G020922

MAINTENANCE AND SERVICING

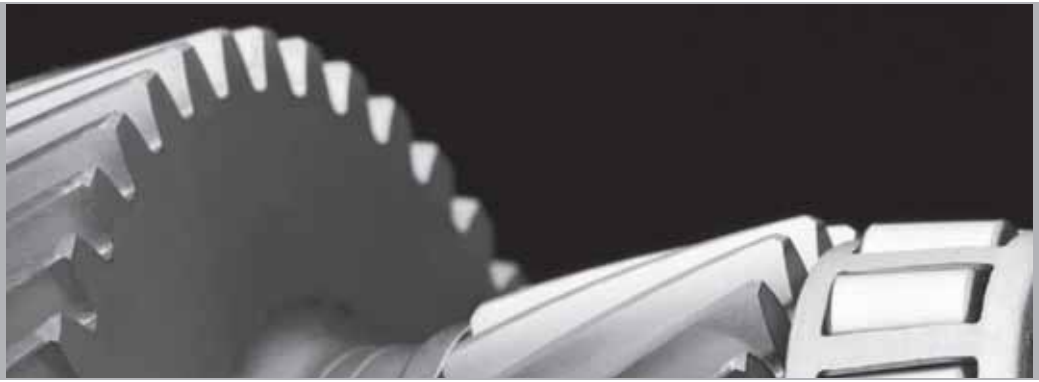

09

Volvo maintenance

General

Volvo advises you to follow the maintenance program outlined in the Warranty and Service Records Information booklet. This maintenance program contains inspections and services necessary for the proper function of your vehicle. The maintenance services contain several checks that require special tools and training, and therefore must be performed by a qualified technician. To keep your Volvo in top condition, specify time-tested and proven Genuine Volvo Parts and Accessories.

The Federal Clean Air Act – U.S

The Federal Clean Air Act requires vehicle manufacturers to furnish written instructions to the ultimate purchaser to assure the proper servicing and function of the components that control emissions. These services, which are listed in the "Warranty and Service Records Information" booklet, are not covered by the warranty. You will be required to pay for labor and material used.

Maintenance

Your Volvo passed several major inspections before it was delivered to you, in accordance with Volvo specifications. The maintenance procedures outlined in the Warranty and Service Records Information booklet, many of which will positively affect your vehicle's emissions, should be performed as indicated. It is recommended that receipts for vehicle emission maintenance be retained in case questions arise concerning maintenance. Inspection and maintenance should also be performed anytime a malfunction is observed or suspected.

Applicable warranties – U.S/Canada

In accordance with applicable U.S. and Canadian regulations, the following list of warranties is provided.

- New Vehicle Limited Warranty
- Parts and Accessories Limited Warranty
- Corrosion Protection Limited Warranty
- Seat Belt and Supplemental Restraint Systems Limited Warranty
- Emission Design and Defect Warranty
- Emission Performance Warranty

These are the federal warranties; other warranties are provided as required by state/provincial law. Refer to your separate Warranty and Service Records Information booklet for detailed information concerning each of the warranties.

Periodic maintenance helps minimize emissions

Periodic maintenance will help keep your vehicle running well. Your Warranty and Service Records Information booklet provides a comprehensive periodic maintenance schedule up to 150,000 miles (240,000 km) of vehicle maintenance. The schedule includes components that affect vehicle emissions. This page describes some of the emission-related components.

Vehicle Event Data (Black Box)

Your vehicle's driving and safety systems employ computers that monitor, and share with each other, information about your vehicle's operation. One or more of these computers may store what they monitor, either during normal vehicle operation or in a crash or near-crash event. Stored information may be read and used by:

- Volvo Car Corporation
- service and repair facilities

- law enforcement or government agencies
- others who may assert a legal right to know, or who obtain your consent to know such information.

Maintaining your car

Owner maintenance

Periodic maintenance requirements and intervals are described in your vehicle's Warranty and Service Records Information booklet.

The following points can be carried out between the normally scheduled maintenance services.

Each time the car is refueled:

- Check the engine oil level.
- Clean the windshield, windshield wipers, headlights, and taillights.

Monthly:

- Check cold tire pressure in all tires. Inspect the tires for wear.
- Check that engine coolant and other fluid levels are between the indicated "min" and "max" markings.
- Clean interior glass surfaces with a glass cleaner and soft paper towels.
- Wipe driver information displays with a soft cloth.
- Visually inspect battery terminals for corrosion. Corrosion may indicate a loose terminal connector, or a battery near the end of its useful service life. Consult a trained and qualified Volvo service technician for additional information.

As needed:

- Wash the car, including the undercarriage, to reduce wear that can be caused by a buildup of dirt, and corrosion that can be caused by salt residues.
- Clean leaves and twigs from air intake vents at the base of the windshield, and from other places where they may collect.

NOTE

Complete service information for qualified technicians is available online for purchase or subscription at www.volvotechinfo.com.

Hoisting the vehicle

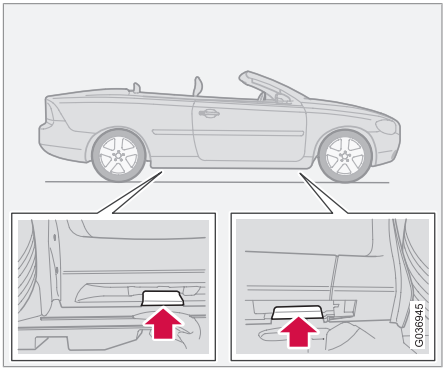

If a garage jack is used to lift the vehicle, the two jack attachments points should be used. They are specially reinforced to bear the weight of the vehicle. A garage jack can also be placed under the front of the engine support frame. Take care not to damage the splash guard under the engine. Ensure that the jack is positioned so that the vehicle cannot slide off it. Always use axle stands or similar structures.

If a two-post hoist is used to lift the vehicle, the front and rear lift arm pads should be centered under the reinforced lift plates on the inboard edge of the sill rail (see illustration).

Emission inspection readiness

What is an Onboard Diagnostic System (OBD II)?

OBD II is part of your vehicle's computerized engine management system. It stores diagnostic information about your vehicle's emission controls. It can light the Check Engine light (MIL) if it detects an emission control "fault." A "fault" is a component or system that is not performing within an expected range. A fault may be permanent or temporary. OBD II will store a message about any fault.

How Do States Use OBD II for Emission Inspections?

Many states connect a computer directly to a vehicle's OBD II system. The inspector can then read "faults." In some states, this type of inspection has replaced the tailpipe emission test.

How Can My Vehicle Fail OBD II Emission Inspection?

Your vehicle can fail OBD II emission inspection for any of the following reasons.

- If your Check Engine (MIL) light is lit, your vehicle may fail inspection.
- If your vehicle's Check Engine light was lit, but went out without any action on your part, OBD II will still have a recorded fault. Your vehicle may pass or fail, depending on the inspection practices in your area.
- If you had recent service that required disconnecting the battery, OBD II diagnostic information may be incomplete and "not ready" for inspection. A vehicle that is not ready may fail inspection.

How Can I Prepare for My Next OBD II Emission Inspection?

- If your Check Engine (MIL) light is lit – or was lit but went out without service, have your vehicle diagnosed and, if necessary, serviced by a qualified Volvo technician.
- If you recently had service for a lit Check Engine light, or if you had service that required disconnecting the battery, a period of driving is necessary to bring the OBD II system to "ready" for inspection. A half-hour trip of mixed stop-and-go/highway driving is typically needed to allow OBD II to reach readiness. Your Volvo retailer can provide you with more information on planning a trip.
- Maintain your vehicle in accordance with your vehicle's maintenance schedule.

Hood

Opening the hood

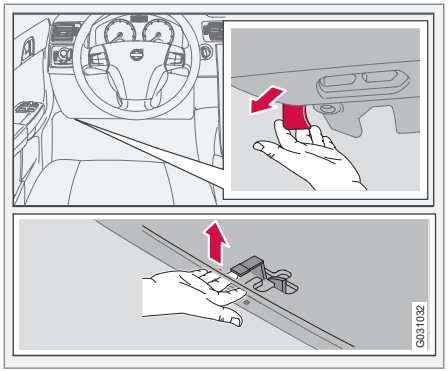

To open the hood:

1. Pull the lever located under the left side of the dash to release the hood lock.
2. Lift the hood slightly.
3. Press up the release control located under the front edge of the hood (at the center) up to the right, and lift the hood.

WARNING

Check that the hood locks engage properly when closed.

Engine compartment

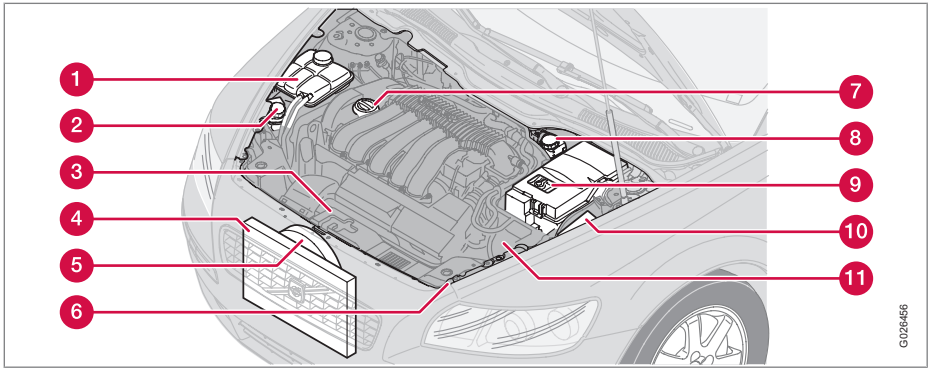

1. Cooling system expansion tank
2. Power steering fluid reservoir (concealed behind the headlight)
3. Dipstick – engine oil
4. Radiator
5. Cooling fan
6. Washer fluid reservoir
7. Engine oil filler cap
8. Brake/clutch fluid reservoir
9. Battery
10. Relay/fuse box
11. Air cleaner

WARNING

The cooling fan may start or continue to operate (for up to 6 minutes) after the engine has been switched off.

Engine oil

Changing engine oil and oil filter

See page 271 for oil specifications. Refer to the Warranty and Service Records Information booklet for information on the oil change intervals.

Volvo recommends Castrol.

NOTE

- Volvo does not recommend the use of oil additives.
- Synthetic oil is not used when the oil is changed at the normal maintenance intervals except at owner request and at additional charge. Please consult a trained and qualified Volvo service technician.

Checking and adding oil

The oil level should be checked every time the vehicle is refueled. This is especially important during the period up to the first scheduled maintenance service

- The car should be parked on a level surface when the oil is checked.
- **If the engine is warm**, wait for at least 10–15 minutes after the engine has been switched off before checking the oil.

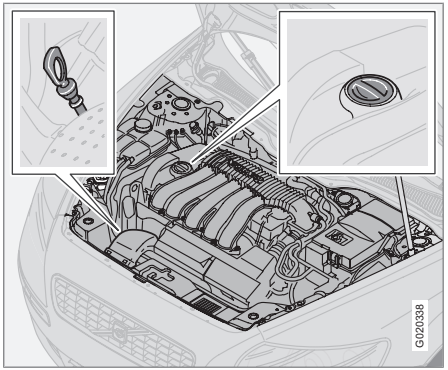

Location of dipstick and oil filler cap

Checking the oil

1. Pull out the dipstick and wipe it with a lint-free rag.
2. Reinsert the dipstick, pull it out, and check the oil level.
3. Add oil if necessary. If the level is close to the **MIN** mark, add approximately 1 US quart (1 liter) of oil.
4. Run the engine until it reaches normal operating temperature.
5. Switch off the engine and wait for at least 10–15 minutes and recheck the oil level. If necessary, add oil until the level is near the **MAX** mark.

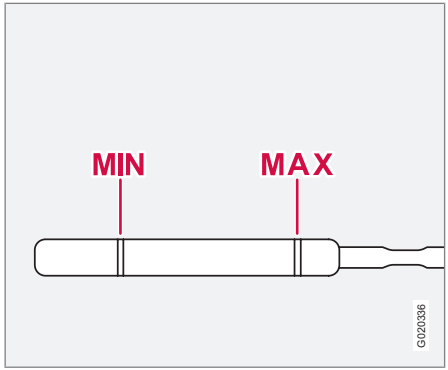

CAUTION

- Not checking the oil level regularly can result in serious engine damage if the oil level becomes too low.
- Oil that is lower than the specified quality can damage the engine.
- Always add oil of the same type and viscosity as already used.
- Never fill oil above the **MAX** mark. This could cause an increase in oil consumption.

Engine oil

WARNING

Do not allow oil to spill onto or come into contact with hot exhaust pipe surfaces

NOTE

Volvo uses different systems to indicate a low oil level or pressure. Some models have an oil pressure sensor, in which case a warning symbol (see page 53) is used to indicate low oil pressure. Other models have an oil level sensor, in which case the driver is alerted by the warning symbol in the center of the instrument panel and a text in the information display. Some models use both systems. Contact an authorized Volvo retailer for more information.

Fluids

Washer fluid

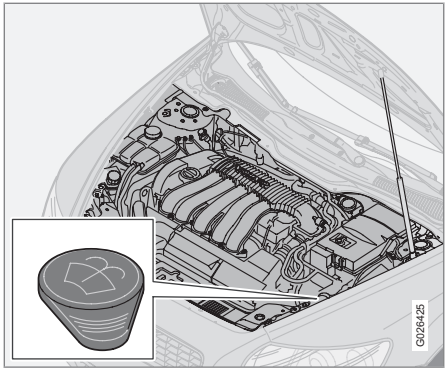

Washer fluid reservoir

The washer fluid reservoir is located in the engine compartment and holds approximately 6.8 US qts (6.5 liters). During cold weather, the reservoir should be filled with windshield washer solvent containing antifreeze.

Coolant

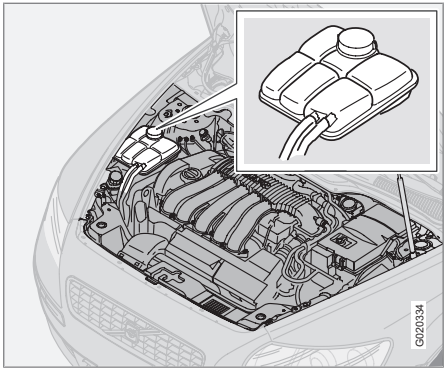

Coolant reservoir

Normally, the coolant does not need to be changed. If the system must be drained, consult a trained and qualified Volvo service technician.

CAUTION

- If necessary, top up the cooling system with Volvo Genuine Coolant/Antifreeze only (a 50/50 mix of water and anti-freeze).
- Different types of antifreeze/coolant may not be mixed.
- If the cooling system is drained, it should be flushed with clean water or premixed anti-freeze before it is refilled with the correct mixture of water/anti-freeze.
- The cooling system must always be kept filled to the correct level, and the level must be between the **MIN** and **MAX** marks. If it is not kept filled, there can be high local temperatures in the engine which could result in damage. Check coolant regularly!
- Do not top up with water only. This reduces the rust-protective and anti-freeze qualities of the coolant and has a lower boiling point. It can also cause damage to the cooling system if it should freeze.
- Do not use chlorinated tap water in the vehicles cooling system.

WARNING

Never remove the radiator cap while the engine is warm. Wait until the vehicle cools.

If it is necessary to top off the coolant when the engine is warm, unscrew the expansion tank cap slowly so that the overpressure dissipates.

Brake fluid

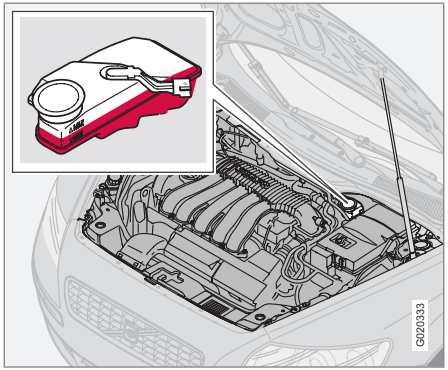

Brake fluid reservoir

The brake fluid should always be between the **MIN** and **MAX** marks on the side of the reservoir. Check, without removing the cap, that there is sufficient fluid in the reservoir.

Fluid type: DOT 4+ boiling point >536 °F (280 °C), P/N 9437433

Replace: The fluid should be replaced according to the intervals specified in the Warranty and Service Records Information booklet. When driving under extremely hard conditions (mountain driving, etc), it may be necessary to replace the fluid more often. Consult your Volvo retailer. Always entrust brake fluid changing to a trained and qualified Volvo service technician.

WARNING

- If the fluid level is below the **MIN** mark in the reservoir or if a brake-related message is shown in the information display: **DO NOT DRIVE**. Have the car towed to a trained and qualified Volvo service technician and have the brake system inspected.
- Dot 4+ should never be mixed with any other type of brake fluid.

Power steering fluid

The fluid level is checked at each service interval.

Fluid type: Volvo power steering fluid or equivalent.

Replace: No fluid change required.

WARNING

If a problem should occur in the power steering system or if the vehicle has no electrical current and must be towed, it is still possible to steer the vehicle. However, keep in mind that greater effort will be required to turn the steering wheel.

Wiper blades

Replacing windshield wiper blades

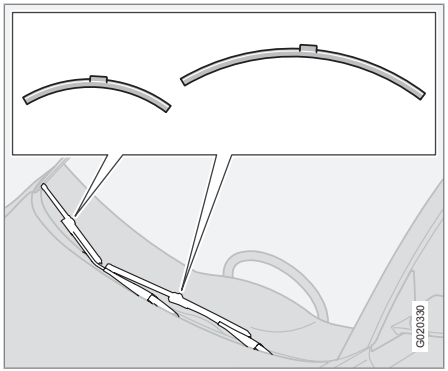

1. Fold out the wiper arm.
2. Press the button on the wiper blade attachment and pull straight out (1), parallel with the wiper arm.
3. Press a new wiper blade (2) until it clicks into place.
4. Ensure the blade is securely attached (3).
5. Fold in the wiper arm.

The wiper blades are different lengths. The blade on the driver's side is longer than the one on the passenger's side.

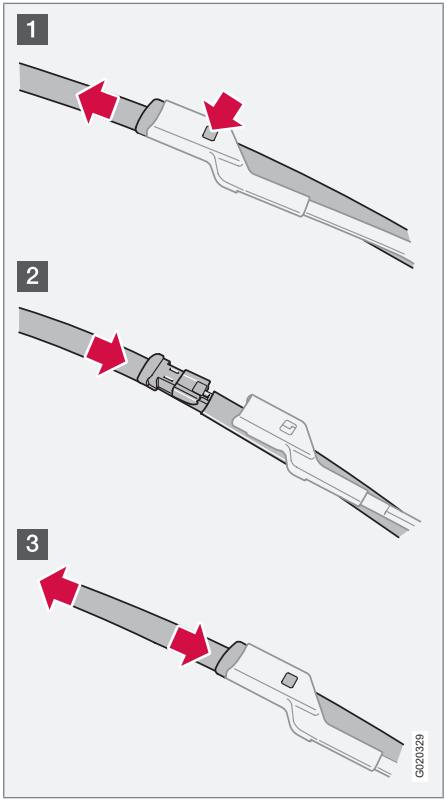

Keeping the windshield wiper blades clean helps improve visibility and prolongs the service life of the wiper blades. See page 200 for washing instructions.

Battery maintenance

Driving habits and conditions, climate, the number of starts, etc., all affect the service life and function of the battery. In order for your battery to perform satisfactorily, keep the following in mind:

Check the fluid level in each cell in the battery every 24 months or every 15,000[1] miles (24,000 km), whichever is sooner.

- Use a screw driver to open the caps or cover and a flashlight to inspect the level.
- If necessary, add distilled water. The level should never be above the indicator.
- The fluid level should be checked if the battery has been recharged.
- After inspection, be sure the cap over each battery cell or the cover is securely in place.
- Check that the battery cables are correctly connected and properly tightened.
- Never disconnect the battery when the engine is running, or when the key is in the ignition. This could damage the vehicle's electrical system.
- The battery should be disconnected from the vehicle when a battery charger is used directly on the battery.
- To help keep the battery in good condition, the vehicle should be driven for at least 15 minutes a week or connected to a charger with an automatic charging function.
- If the battery is fully discharged a number of times, this may shorten its service life. Keeping the battery fully charged helps prolong its service life.
- The service life of a battery is affected by factors such as driving conditions and climate. Extreme cold may also further decrease the battery's starting capacity.
- Because the battery's starting capacity decreases with time, it may be necessary to recharge it if the vehicle is not driven for an extended period of time or if the vehicle is usually only driven short distances.
-

WARNING

PROPOSITION 65 WARNING!

Battery posts, terminals, and related accessories contain lead and lead compounds, chemicals known to the state of California to cause cancer and reproductive harm. Wash hands after handling.

Battery symbols

Wear protection goggles

See owner's manual for details

Keep away from children

Corrosive

[1] More frequently in warm climates.

Battery

No smoking, no open flames, no sparks

Explosion

Battery replacement

Removing the battery

1. Switch off the ignition and remove the key.
2. Wait at least 5 minutes after switching off the ignition before disconnecting the battery so that all information in the vehicle's electrical system can be stored in the control modules.
3. Remove the cover over the battery.
4. Disconnect the battery negative (ground) cable.
5. Disconnect the positive cable.
6. Remove the front side of the battery box with a screwdriver.
7. Release the clamp holding the battery.
8. Lift out the battery.

Installing a new battery

1. Put the battery in place in the engine compartment.
2. Install the battery's retaining clamp.
3. Reinstall the front side of the battery box.
4. Connect the positive cable.
5. Connect the ground cable.
6. Reinstall the cover over the battery.

NOTE

Used batteries should be properly disposed of at a recycling station or similar facility, or taken to your Volvo retailer.

WARNING

- Never expose the battery to open flame or electric spark.
- Do not smoke near the battery.
- Battery fluid contains sulfuric acid. Do not allow battery fluid to contact eyes, skin, fabrics or painted surfaces. If contact occurs, flush the affected area immediately with water. Obtain medical help immediately if eyes are affected.

Introduction

Before replacing bulbs in your vehicle, please keep the following points in mind:

NOTE

Never touch the glass of bulbs with your fingers. Grease and oils from your fingers vaporize in the heat and will leave a deposit on the reflector, which will damage it.

The optional Dual Xenon headlight bulbs contain trace amounts of mercury. These bulbs should always be disposed of by a trained and qualified Volvo service technician.

Certain bulbs should only be replaced by a trained and qualified Volvo service technician:

- Courtesylighting
- Reading lights
- Glove compartment lights
- Turn signals and courtesy lights in the side door mirrors
- High-mounted brake lights
- Dual Xenon headlights, Brake lights

Removing the headlight housing

WARNING

- The engine should not be running when changing bulbs.
- When changing in the headlight housing, if the engine has been running just prior to replacing bulbs, please be aware that components in the engine compartment will be hot.

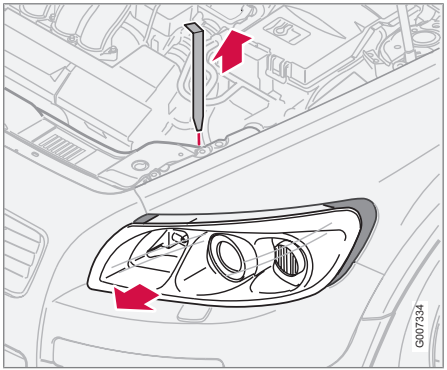

The entire headlight housing must be lifted out when replacing the high/low beam, parking light, turn signal, and side marker bulbs. To lift out the housing:

1. Remove the key from the ignition and turn the headlight switch to position 0.
2. Open the hood.
3. Pull up the headlight housing's retaining pin.
4. Pull out the headlight housing.

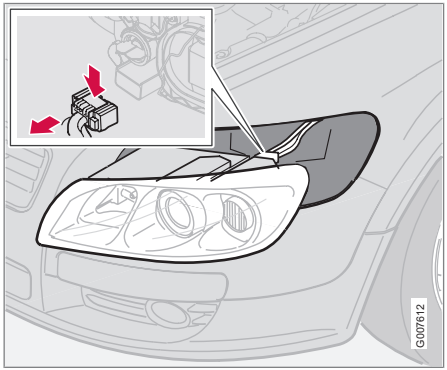

5. Disconnect the wiring connector by pressing down the clip with your thumb while at the same time pulling the connector with your other hand.

Replacing bulbs

6. Lift out the headlight housing and place it on a soft surface to avoid scratching the lens.

CAUTION

When disconnecting the connector, pull on the connector itself and not on the wiring.

After the defective bulb has been replaced, reinsert the housing in the reverse order. Check that the retaining pin is correctly inserted.

WARNING

Dual Xenon headlights* – due to the high voltage used by these headlights, these bulbs should only be replaced by a trained and qualified Volvo service technician.

Low beam bulb

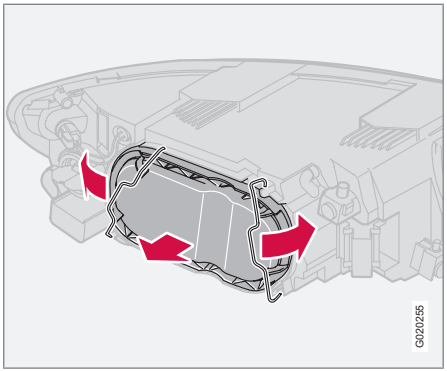

Cover with retaining clamps

1. Open the hood and remove the headlight housing (see page 221 for instructions).
2. Release the retaining clamps on the cover.
3. Release the bulb's retaining spring holding the bulb in place by pressing it first to the left and then moving it outward and downward.
4. Pull out the bulb.

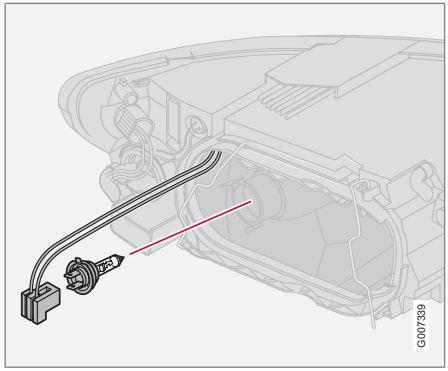

Low beam bulb

Installing a new bulb

1. Insert the new bulb. It can only be installed in one position.
2. Press the retaining spring inward and upward and slightly to the right until it snaps into place.
3. Press the wiring connector onto the bulb.
4. Put the plastic cover in place.
5. Press the retaining clamps back into place.
6. Reinstall the headlight housing (see page 221).

* Option/accessory, for more information, see Introduction.

High beam bulb

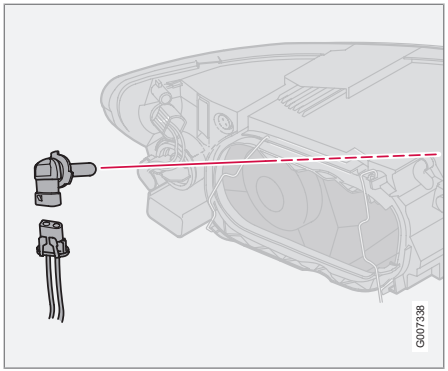

Halogen high beam bulb

1. Open the hood.
2. Remove the headlight housing (see page 221).

NOTE

The halogen high beam bulb has a different socket on vehicles equipped with the optional Dual Xenon headlights. On these models, pull the bulb straight out.

WARNING

Dual Xenon headlights* – due to the high voltage used by these headlights, the Dual Xenon bulbs should only be replaced by a trained and qualified Volvo service technician.

3. Driver's side headlight: Turn the bulb holder counterclockwise.

   Passenger's side headlight: Turn the bulb holder clockwise.
4. Pull out the bulb holder and replace the bulb.
5. Reinstall the bulb holder. It can only be installed in one position.
6. Reinstall the headlight housing (see page 221).

Parking light bulb

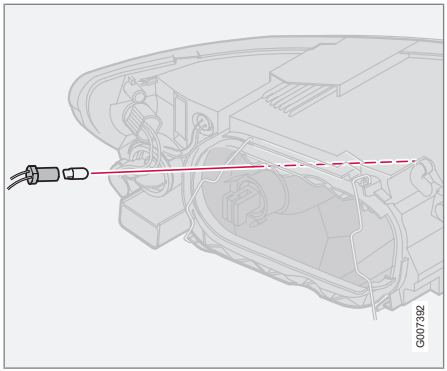

1. Pull out the bulb holder with a pair of pliers. The bulb holder should not be pulled out by the wire.
2. Replace the bulb.
3. Press the bulb holder back into place. It can only be installed in one position.

Replacing bulbs

Turn signal

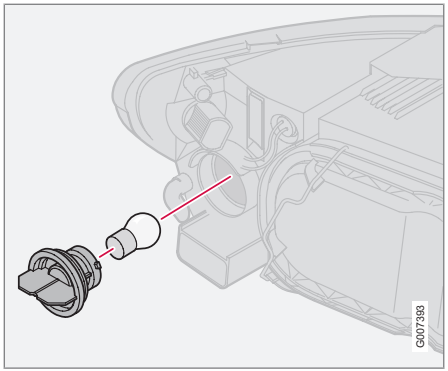

1. Turn the bulb holder counterclockwise and remove it.
2. Remove the bulb from the holder by pressing it in and twisting it counterclockwise.
3. Insert a new bulb and reinstall the bulb holder in the headlight housing.

Side marker light

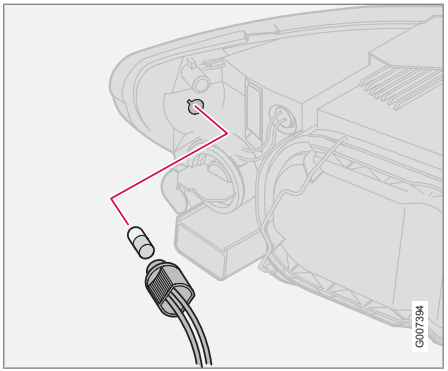

1. Turn the bulb holder counterclockwise, pull it out, and replace the bulb.
2. Reinstall the bulb holder. It can only be installed in one position.

Front fog lights*

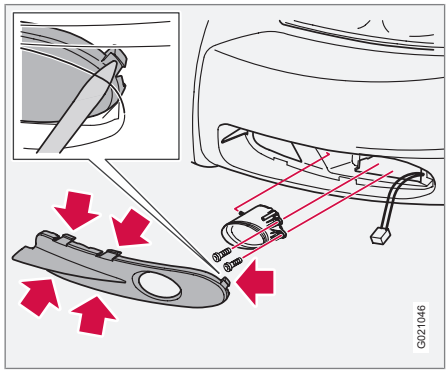

1. Switch off all lights and turn the key to position **0**.
2. Remove the panel around the fog light housing.
3. Unscrew both torx screws in the fog light housing and remove it.
4. Disconnect the connector from the bulb.
5. Turn the bulb counterclockwise and pull it out.
6. Install the new bulb in its seat and turn it clockwise.
7. Reconnect the connector to the bulb.

* Option/accessory, for more information, see Introduction.

8. Secure the fog light housing with the screws and press the panel back into place.

Removing the taillight bulb holder

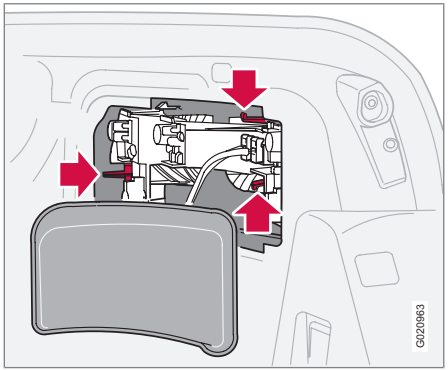

All bulbs in the taillight cluster can be replaced from the trunk. To access the bulb holders:

1. Switch off all lights and turn the key to position **0**.
2. Remove the covers in the left/right panels to access the bulb holders.
3. Disconnect the wiring connector from the affected bulb holder.
4. Press the catches together and pull out the bulb holder.
5. Replace the defective bulb.
6. Press the bulb holder into place and reinstall the cover.

Location of taillight bulbs

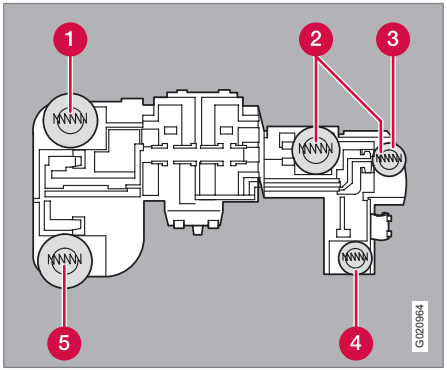

Location of taillight bulbs

1. Brake light (LED)[1]
2. Taillight/parking light
3. Fog light (driver's side only)
4. Turn signal
5. Back-up light

NOTE

If the message indicating a burned out bulb remains in the information display after the bulb has been replaced, consult a trained and qualified Volvo service technician.

High-level brake light

These bulbs should only be replaced by a trained and qualified Volvo service technician.

[1] The wiring to the LED brake lights is permanently connected to the bulb holder. It should not be removed.

Replacing bulbs

License plate lighting

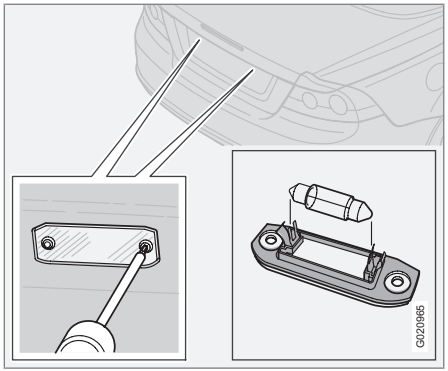

1. Switch off all lights and turn the key to position **0**.
2. Remove the screws with a screw driver.
3. Detach the lens (bulb housing) carefully.
4. Replace the defective bulb.
5. Reinstall the entire bulb housing and screw it into place.

Footwell lighting

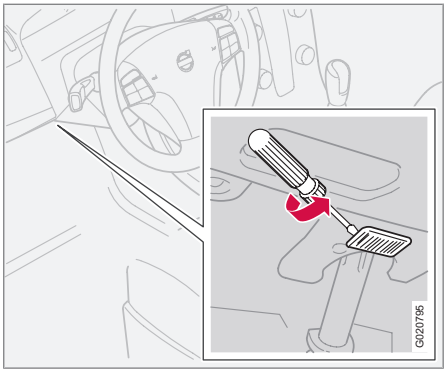

The footwell lighting is located under the dashboard on the driver's and passenger's sides. To replace a bulb:

1. Insert a screwdriver under the edge of the lens. Turn the screwdriver gently to detach the lens.
2. Remove the defective bulb.
3. Install a new bulb.
4. Press the lens back into place.

Trunk lighting

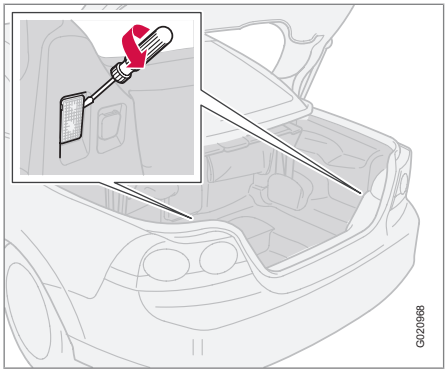

1. Insert a screwdriver and turn it gently to detach the bulb housing.
2. Remove the defective bulb.
3. Install a new bulb.
4. Press the bulb housing back into place.

Vanity mirror lighting

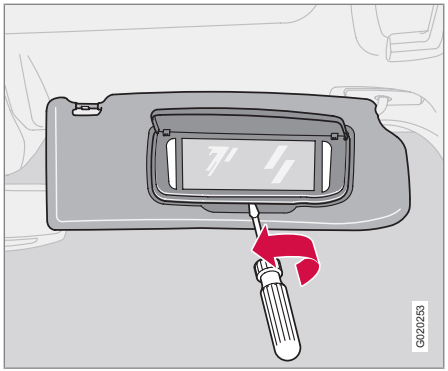

1. Insert a screwdriver under the center of the lower edge of the mirror, turn it, and carefully pry up the lugs at the edge.
2. Move the screwdriver under the edge on the left and right-hand sides (near the black rubber sections) and pry carefully to release the lower edge of the mirror.
3. Pry carefully and lift out the entire mirror and the cover.
4. Remove the defective bulb and replace it with a new one.
5. To reinstall the mirror, begin by pressing the three lugs at the upper edge of the mirror back into place.
6. Press the three lower lugs back into place.

Rear reading light bulbs

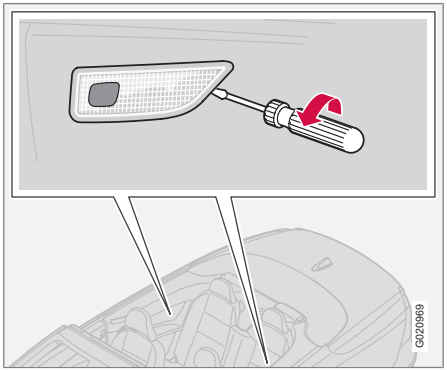

1. Insert a screwdriver and turn it gently to detach the bulb housing.
2. Remove the defective bulb.
3. Install a new bulb.
4. Press the bulb housing back into place.

Fuses

Replacing fuses

There are relay/fuse boxes located in the engine compartment and the passenger compartment.

If an electrical component fails to function, this may be due to a blown fuse. The easiest way to see if a fuse is blown is to remove it.

To do so:

1. Pull the fuse straight out. If a fuse is difficult to remove, special fuse removal tools are located on the inside of the fuse box covers.
2. From the side, examine the curved metal wire in the fuse to see if it is intact.
3. If the wire is broken, insert a new fuse of the **same color and amperage** (written on the fuse).

If fuses burn out repeatedly, have the electrical system inspected by a trained and qualified Volvo service technician.

WARNING

Never use metal objects or fuses with higher amperage than those stated on the following pages. Doing so could seriously damage or overload the vehicle's electrical system.

Fuse box in the engine compartment

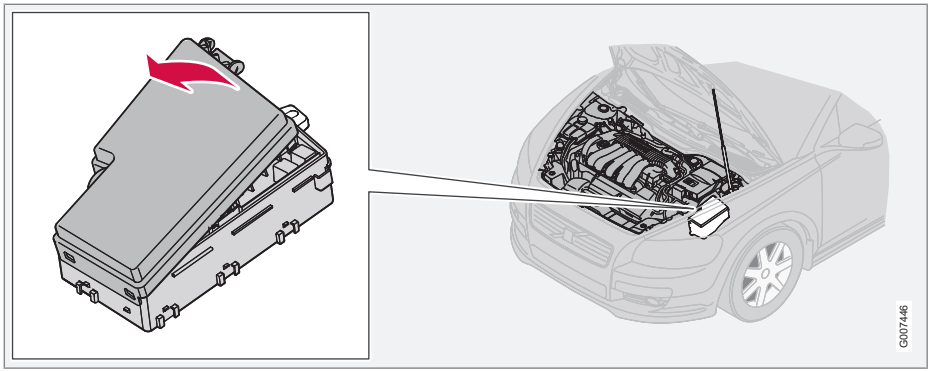

The fuse box in the engine compartment has positions for 36 fuses.

- Fuses 1–18 are relays/circuit breakers and should only be removed or replaced by an authorized Volvo service technician.
- Fuses 19–36 may be changed at any time when necessary.

Several extra fuses and a fuse removal tool to assist in removing/replacing fuses can be found on the underside of the fuse box cover in the engine compartment.

Fuses

Fuses in the engine compartment

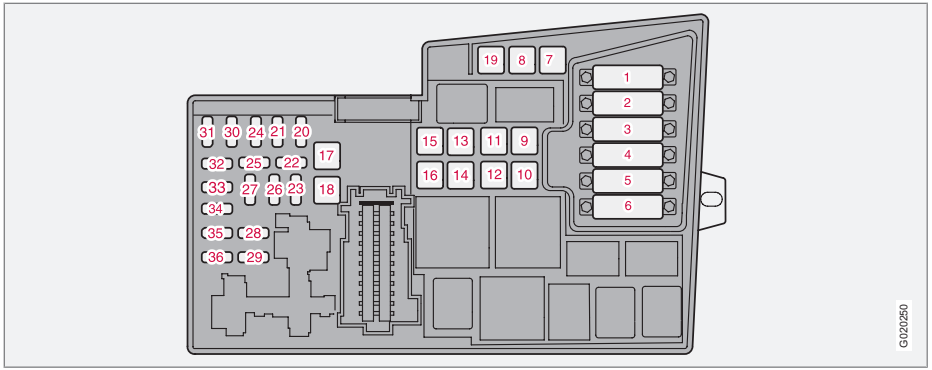

1.	Coolant fan (radiator)	50A
2.	Power steering	80A
3.	Feed to passenger compartment fuse box	60A
4.	Feed to passenger compartment fuse box	60A
5.	Element, climate unit	80A
6.	Not in use	
7.	ABS pump	30A
8.	ABS valves	20A

9.	Engine functions	30A
10.	Climate system blower	40A
11.	Headlight washers Headlight washers, climate system blower, power retractable hard top, locking storage compartments	20A
12.	Feed to heated rear window	30A
13.	Starter motor relay	30A
14.	Trailer connector (accessory)	40A

15.	Power retractable hard top	30A
16.	Feed to audio system	40A
17.	Windshield wipers	30A
18.	Feed to passenger compartment fuse box	40A
19.	Not in use	
20.	Horn	15A
21.	Not in use	
22.	Subwoofer	25A

23.	Engine control module (ECM)/transmission control module (TCM)	10A
24.	Not in use	
25.	Not in use	
26.	Ignition switch	15A
27.	A/C compressor	10A
28.	Not in use	
29.	Front fog lights*	15A
30.	Not in use	
31.	Not in use	
32.	Fuel injectors	10A
33.	Heated oxygen sensor, vacuum pump	20A
34.	Ignition coils, climate unit pressure sensor	10A
35.	Engine sensor valves, A/C relay, relay coil, PTC element oil trap, canister, mass air meter	15A
36.	Engine control module (ECM), throttle sensor	10A

Fuses

Fuse box in the passenger compartment

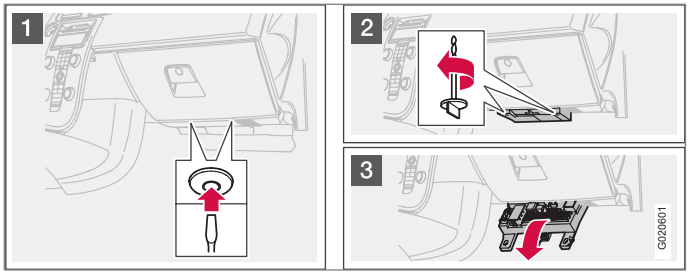

The fuse box in the passenger compartment is located under the glove compartment.

To access the fuses:

1. Remove the upholstery covering the fuse box by first pressing in the center pins in the mounting clips approximately 0.5 in (1 cm) with a small screwdriver and then pulling the pins out.
2. Turn both retaining screws (2) counter-clockwise until they release.
3. Fold down the fuse box (3) half way. Pull it toward the seat until it stops. Fold it down completely. The fuse box can be unhooked completely.
4. Replace the blown fuse.
5. Close the fuse box in reverse order.
6. Pull the center pins fully out of the mounting clips, secure the upholstery with the mounting clips and press the pins into the mounting clips again. The mounting clips then expand, holding the upholstery in position.

Fuses in the passenger compartment

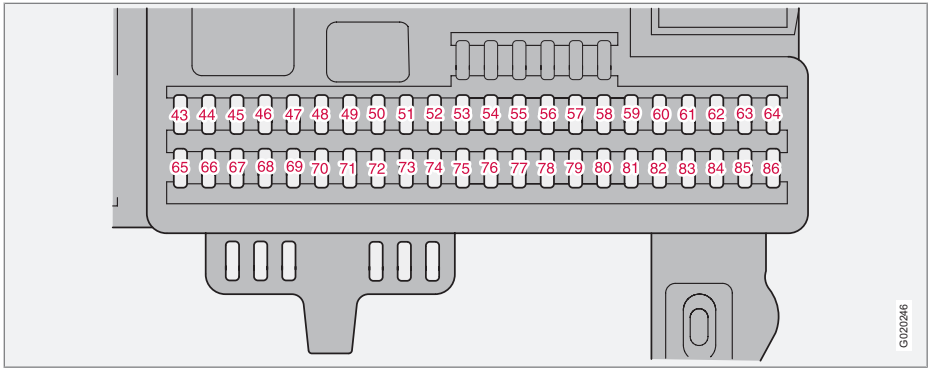

-	Fuse 37-42, not in use	-
43.	Audio system, Bluetooth,Volvo Navigation system*	15A
44.	Supplemental Restrain System (SRS), engine control module	10A
45.	12-volt socket in passenger's compartment	15A
46.	Lighting – glove compartment, instrument panel, and footwells	5A
47.	Interior lighting	5A
48.	Windshield washers	15A
49.	Supplemental Restrain System (SRS), Occupant Weight Sensor (OWS)	10A
50.	Not in use	
51.	Fuel filter relay	10A
52.	Transmission control module (TCM), ABS	5A
53.	Power steering	10A
54.	Park assist*, Dual Xenon headlights*	10A
55.	Not in use	
56.	Volvo Navigation System remote key module, alarm siren control module	10A
57.	On-board diagnostic socket, brake light switch	15A
58.	Right high beam, auxiliary lights relay	7.5A
59.	Left high beam	7.5A

Fuses

60.	Heated driver's seat*	15A
61.	Heated passenger's seat*	15A
62.	Not in use	
63.	Power window – rear passenger's side	20A
64.	Volvo Navigation system*, lock indicator lights in door panels	5A
65.	Audio system	5A
66.	Audio system control module (ICM), climate system	10A
67.	Not in use	
68.	Cruise control	5A
69.	Climate system, rain sensor*, BLIS button*	5A
70.	Not in use	
71.	Not in use	
72.	Not in use	
73.	Front ceiling lighting	5A
74.	Fuel pump relay	15A
75.	Not in use	
76.	Not in use	
77.	12-volt socket in trunk, auxiliary equipment control module (AEM)	15A
78.	Not in use	
79.	Back-up lights	5A
80.	Not in use	
81.	Power window and door lock – rear driver's side	
82.	Power window – front passenger's side door	25A
83.	Power window and door lock – front driver's side door	25A
84.	Power passenger's seat	25A
85.	Power driver's seat	25A
86.	Interior lighting relay, trunk lighting, power seats	5A

* Option/accessory, for more information, see Introduction.

Audio functions..... 238
Radio functions..... 243
CD player/CD changer..... 251
Audio menu..... 255
Bluetooth® hands-free connection..... 256

G020924

AUDIO

10

Audio functions

Audio system controls

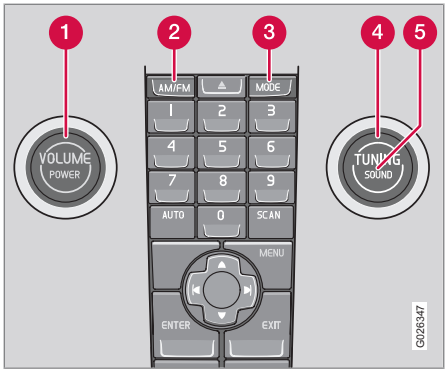

1. **VOLUME** dial
2. **AM/FM** – select a radio band
3. **MODE** – select a sound source
4. **TUNING** dial
5. **SOUND** button

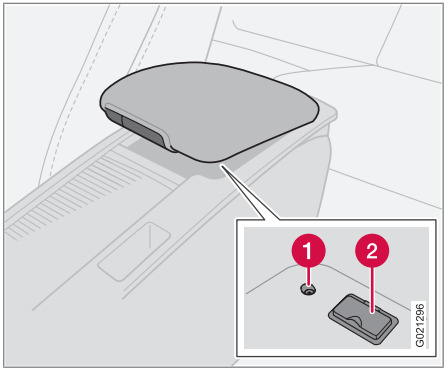

Auxiliary connector

1. AUX port
2. USB connector*

Selecting a sound source

– Press **AM/FM** (2) repeatedly to toggle between FM1, FM2, and AM.

– Press **MODE** (3) repeatedly to toggle between the CD player and the optional external sound source AUX, USB or the optional Sirius satellite radio.

The currently selected sound source will be shown in the display.

AUX

The AUX (auxiliary) port, located under the center armrest, can be used to connect for example, an MP3 player.

If the player is being charged through a 12-volt socket while it is connect to the AUX port, sound quality may be impaired.

The volume of the external sound source AUX may be different from the volume of the internal sound sources such as the CD player or the radio. If the external sound source's volume is too high, the quality of the sound may be impaired.

This can be prevented by adjusting the external sound source's input volume.

1. While playing the radio or a CD, lower the audio volume to about one-quarter.
2. Switch to **AUX** mode on the audio system by pressing the **MODE** button.
3. Connect the headphone output from your music player to the AUX input using a cable with a stereo 3.5 mm miniplug at both ends.
4. Set your music player's headphone volume to three-quarters using the player's volume controls.

* Option/accessory, for more information, see Introduction.

5. Press **MENU** on the audio system, and navigate to **AUX Volume** or **AUX Input Volume**.
6. Turn the volume knob to raise or lower the **AUX Input Volume** until you hear music at a comfortable level.
7. If there is distortion, lower your music player's headphone volume until the distortion goes away.
8. Finally, exit the menu and adjust the audio volume to a comfortable level.

Volume

Use the volume dial (1) or the buttons in the steering wheel keypad to adjust the volume level. The volume level is also adjusted automatically according to the vehicle's speed, see page 242 for more information on this function.

Steering wheel keypad

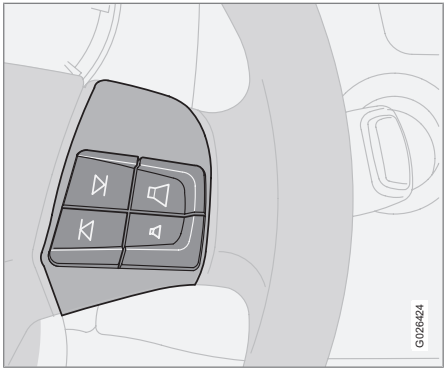

Steering wheel keypad

The four buttons on the steering wheel keypad can be used to control the audio system. The steering wheel keypad can be used to adjust volume, shift between preset stations and change CD tracks. Press one of the two left-hand buttons briefly to change to the next/previous preset radio station, or to go to the next/previous track on a CD. Press and hold down these buttons to search within a track on a CD.

Daytime/twilight display

In daylight the information is displayed against a light background. In darkness it is displayed against a dark background.

USB/iPod® connector*

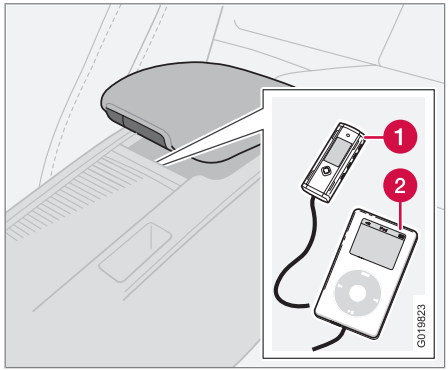

An auxiliary device, such as an iPod®, MP3 player or a USB flash drive can be connected to the audio system via the connector in the center console storage compartment. A standard cable from an iPod® or MP3 player can be routed under the cover to the AUX connector in the storage compartment.

A sound source must be chosen, depending on the device that has been connected:

1. Use **MODE** to select **iPod** or **USB**. The text **CONNECT DEVICE** will be displayed.
2. Connect the device to the connector in the center console storage compartment (see the illustration).

Audio functions

The text **LOADING** will be displayed while the system loads the files (folder structure) on the device. This may take a short time.

When information about the files (the folder structure) on the device has been loaded, the resulting list includes information on the artist, genre and song title.

To navigate in the folder structure, press **ENTER** and scroll up and down the folders using the arrow buttons (on the audio system control panel or on the steering wheel keypad). Press the right arrow button to select a folder. Press the left arrow button to go up a level in the folder structure. Press **ENTER** to go down a level in the folder structure.

Tracks can be selected in two ways:

- Turn the Tuning knob (no. 4 in the illustration on page 243) clockwise or counterclockwise.
- Use the right or left arrow keys on the navigation control (no. 5 in the illustration on page 243) to select the desired track. The arrow keys on the steering wheel keypad can also be used in the same way.

NOTE

The system supports playback of files in the most common versions of formats such as mp3, wma, and wav. However, there may be versions of these formats that the system does not support.

The system also supports a number of iPod® models produced in 2005 or later. iPod® Shuffle is not supported.

USB flash drive

To simplify the use of a USB flash drive, it is advisable to only store music files on the drive. It will take considerably longer for the system to index the files on the drive if it contains anything other than compatible music files.

NOTE

The system supports removable media that uses the USB 2.0 standard and the FAT32 file system and can index up to 500 folders and a maximum of 64,000 files. The device must have at least 256 Mb of memory.

MP3 player

Many MP3 players have a file indexing system that is not supported by the vehicle's audio system. In order to use an MP3 player, the system must be set to USB Removable device/ Mass Storage Device.

iPod®

An iPod® receives current and its battery is charged through the connecting cord. However, if the iPod's battery is completely drained, it should be recharged before the iPod® is connected to the audio system.

NOTE

When an iPod® is used as a sound source, the vehicle's audio system has a menu structure similar to the one in the iPod®. See the iPod's manual for detailed information.

For further information, refer to the accessory manual USB/iPod® Music Interface.

Sound settings

Optimal sound reproduction

The audio system is calibrated for optimal sound reproduction through the use of digital signal processing. This calibration takes into account the speakers, amplifier, cabin acoustics, the seating position of the listener, etc., for each combination of vehicle and audio system. There is also dynamic calibration that takes into account the setting of the volume control, radio reception, and the vehicle's speed. The sound settings described in this manual, such as **BASS**, **TREBLE**, and **EQUALIZER** are only

intended to enable the user to adapt sound reproduction to his/her personal preferences.

1. Press **SOUND** (5). Press this button repeatedly until you come to the setting that you wish to change.
2. Turn the **TUNING** dial (4) to make the desired setting.

The following settings can be made:

BASS–set the bass level

TREBLE–set the treble level

BALANCE–set the left/right sound balance

FADER–set the front/rear sound balance

SUBWOOFER (accessory)–set the level for the subwoofer (bass speaker)

CENTER–make settings for the center speaker

SURROUND–make settings for surround sound

Subwoofer (accessory)

To switch the subwoofer on or off:

1. Press **MENU** followed by **ENTER**.
2. Select **AUDIO SETTINGS** and press **ENTER**.
3. Select **SUBWOOFER** and press **ENTER**.

Surround sound

Surround sound settings are used to balance sound levels throughout the vehicle. Surround settings for the various sound sources are made separately.

NOTE

- Dolby Surround Pro Logic II is only available on the Premium Sound system.
- When listening to FM radio stations, Dolby Surround Pro Logic II functions best in areas with strong reception. If reception is weak, selecting 2 or 3-channel stereo may provide better sound quality.

The Dolby symbol will be appear in the display when Dolby Pro Logic II is activated.

There are three alternative settings:

- Pro Logic II
- 3-channel
- Off (normal 2-channel stereo)

Activating/deactivating Surround sound

1. Press **MENU** followed by **ENTER**.
2. Select **AUDIO SETTINGS** in the menu and press **ENTER**.
3. Select Surround **FM/AM/CD/AUX** and press **ENTER**.
4. Select **Pro logic II**, 3-channel stereo or **Off** and press **ENTER**.

Equalizer Front/Rear

This function is used to fine-tune the sound level for different frequencies separately.

NOTE

This function is only available on certain sound systems.

To adjust the equalizer settings:

1. Press **MENU** followed by **ENTER**.
2. Select **AUDIO SETTINGS** in the menu and press **ENTER**.
3. Select **Equalizer Front/Rear** and press **ENTER**.

The column in the display indicates the sound level for the current frequency.

- Adjust the level with the **TUNING** dial (4), or use the Up/Down arrows. Additional frequencies can be selected with the Right/Left arrows.
- Save the settings by pressing **ENTER** or exit without saving by pressing **EXIT**.

Audio functions

Automatic sound control

The audio system's volume is adjusted automatically according to the speed of the vehicle. There are three settings available, which determine the level of volume compensation:

- Low
- Medium[1]
- High

To set the automatic sound level:

1. Press **MENU** followed by **ENTER**.
2. Select AUDIO SETTINGS in the menu and press **ENTER**.
3. Select AUTO. VOLUME CONTROL in the menu and press **ENTER**.
4. Select Low, Medium, or High and press **ENTER**.

[1] Default setting.

Radio function controls

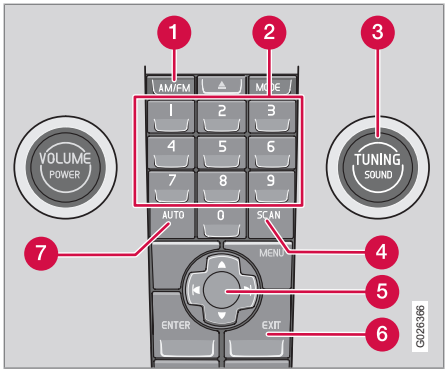

1. **AM/FM1/FM2** selection
2. Station preset buttons
3. **TUNING** dial for selecting radio stations
4. **SCAN**
5. **MENU NAVIGATION CONTROL**–press the up or down arrow keys to scroll in a menu, or the keys on the left/right sides of the control to search for or change radio stations/CD tracks
6. **EXIT**–press to cancel a menu selection or a selected function
7. **AUTO**–search for and store the strongest radio stations in the area in which you are driving

Searching for stations

There are two ways to manually tune a radio station:

- Turn the **TUNING** dial (3) to the desired frequency.
- Press the left or right arrow key on the menu navigation control and hold it down. The radio scans slowly in the selected direction and will increase the scanning speed after a few seconds. Release the button when the desired frequency appears in the display.

The frequency can be fine-tuned by short presses on the left/right arrow keys.

Storing preset stations

Manually storing a station

1. Tune to the desired station.
2. Press and hold the preset button under which the station is to be stored. The audio system sound will be interrupted for a few seconds and **STATION STORED** will appear in the display.

NOTE

A total of 30 stations can be stored; 10 stations each in AM, FM1 and FM2.

Automatically storing a station

Pressing **AUTO** (7) automatically searches for and stores up to ten strong AM or FM stations in a separate memory. If more than ten stations are found, the ten strongest ones are stored. This function is especially useful in areas in which you are not familiar with radio stations or their frequencies.

To use the AUTO function:

1. Select a waveband using the **AM/FM** button (1).
2. Start the search by pressing **AUTO** until **AUTO STORING** appears in the display.

Radio functions

When the search is completed, AUTO STORING will no longer be displayed. If there are no stations with sufficient signal strength, NO AST FOUND is displayed.

The auto-stored stations can be selected using the preset buttons (2).

– Press **EXIT** (6) to terminate the automatic storing function.

When the radio is in auto-store mode, AUTO is shown in the display. AUTO disappears when you return to normal radio mode, which can be done by briefly pressing **AM/FM** (1), **EXIT** (6), or **AUTO** (7).

To return to the Auto-store mode, press the **AUTO** button briefly and select a stored station by pressing one of the preset buttons (2).

Saving auto-stored stations in the preset memory

An auto-stored station can be saved in the memory for manually preset stations.

1. Press **AUTO** (7) briefly.
   > Auto is displayed.
2. Press one of the preset buttons (2) under which the station is to be stored. Hold down the button until STATION STORED is displayed.

The radio will then exit auto-store mode and the stored station can be selected by pressing the preset button.

Scanning

SCAN (4) automatically searches through the selected waveband for strong AM or FM stations. When the radio finds a station, that station will be played for approximately 8 seconds, after which scanning resumes.

Activating/deactivating SCAN

1. Select radio mode using the **AM/FM** button (2).
2. Press **SCAN** to activate the function. SCAN is shown in the display.
3. Press the **SCAN** or **EXIT** button to deactivate the scan function and listen to the selected station.

Storing a station found with SCAN

A station can be stored as a preset while the SCAN function is activated.

– Press one of the preset buttons (2) under which the station is to be stored. Hold down the button until STATION STORED is displayed.

The SCAN function will be deactivated and the station can be selected by pressing the preset button.

Radio text

Certain stations broadcast program information, which can be shown in the display.

To start this function:

1. Select FM1 or FM2 and press the **MENU** button.
2. Press **ENTER**.
3. Select RADIOTEXT in the menu and press **ENTER**.

To deactivate this function, select RADIOTEXT again and press **ENTER**.

HD Radio™reception HD Radio (U.S. models only)[1]

Introduction

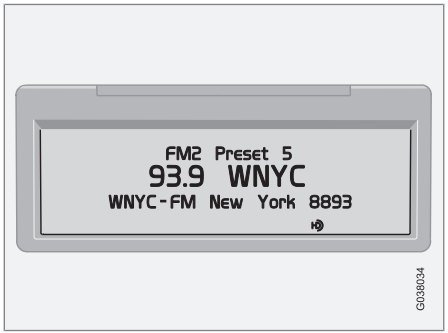

Display when the radio is receiving an HD Radio broadcast

HD radio is a brand name registered by the Ibiquity digital corporation[2]. They are the developer of a broadcasting technology called IBOC or In Band On Channel, which refers to the method of transmitting a digital radio broadcast signal centered on the same frequency as the AM or FM station's present frequency.

The IBOC system is referred to as a "hybrid" since it is both analogue and digital. During hybrid operation, receivers still continue to receive the analogue (non-digital) signal. HD radio receivers incorporate both modes of reception, where the receiver will automatically switch to the analogue signal if the digital signal cannot be decoded or is lost by the receiver. When you have tuned to an HD Radio station, the HD symbol will appear in the audio system display.

More information about HD radio and IBOC can be found on Ibiquity's website, www.hdradio.com and www.ibiquity.com.

Benefits of digital broadcasting

- Better sound (FM sounds near CD quality and AM as analogue FM).
- Some FM frequencies offer a greater number of listening choices through “multicasting” (consisting of a frequency's main channel and any sub-channels that may also be available on that particular frequency. See also the section "Sub-channels" below).
- When receiving a digital signal there is no multipath disturbance or hisses/pops/crackling due to outside influences.

How HD broadcasting works

HD Radio works similarly to conventional radio and broadcasts of this type are available in many areas of the United States. However, there are a few key differences:

- Instead of transmitting one analogue signal, stations send out a bundled signal – both analogue and digital.
- An HD radio receiver can receive both digital and analogue broadcasts. Depending on the terrain and location of the vehicle (which will influence the signal strength), the receiver will determine which signal to receive.

Limitations

- **Main channel vs. sub-channels (FM only)**: The main channel is the only channel that can receive in hybrid mode (both digital and analogue). If a frequency has sub-channels, they are broadcast in digital mode only. The main FM channel will be displayed as, for example, 93.9 WNYC (Volvo uses the symbol > to indicate there are sub-channels available) The sub-FM

[1] HD Radio(TM) technology is manufactured under license from iBiquity Digital Corp. U.S. and Foreign Patents. HD Radio(TM) and the HD and HD Radio logos are proprietary trademarks of iBiquity Digital Corp. HD Radio(TM) is only available in vehicles not equipped with the optional integrated CD changer.
[2] HD Radio (TM) technology is manufactured under license from iBiquity Digital Corp. U.S. and Foreign Patents. HD Radio(TM) and the HD and HD Radio logos are proprietary trademarks of iBiquity Digital Corp.

Radio functions

channels will be displayed as 93.9 – 2 WNYC, 93.9 - 3 WNYC, etc.

- **Reception coverage area**: Due to current IBOC transmitter power limitations, the reception coverage area in digital mode is somewhat more limited than the station's analogue coverage area. Please be aware that as with any radio broadcast technology, terrain, time of day, foliage level and building location can have positive or negative effects on radio reception.
- **Analogue to digital/digital to analogue blending**: Analogue to digital blending will occur as the signal strength reaches a preset threshold in the receiver. This will be noticeable in fringe areas (areas with weak reception) and is normal.

NOTE

There may be a noticeable difference in sound quality when a change from analogue to digital or digital to analogue occurs, such as:

- Volume increase or decrease
- Equalizer settings, i.e. Bass/ Midrange/ Treble cut or boost
- Time alignment (Digital program material in extreme cases can be as much as 8 seconds behind the analogue). This will noticeable as a "stuttering" effect.

The above items are dependant on the broadcaster's equipment settings and do not indicate a fault in the vehicle's radio receiver or antenna systems.

Switching HD on or off

The factory setting for HD radio is **on**. However, when driving through areas with weak HD signals (fringe areas), you may experience that the radio repeatedly switches between analogue/ digital and digital/analogue reception. If this happens, it may be desirable to switch HD off. To do so:

1. Be sure the audio system is switched on and in AM or FM mode.
2. Press **MENU** in the center console control panel.
3. Press **ENTER** to turn HD off (the X will disappear from the box on the display screen).

This will disable the radio's capability to receive digital broadcasts but it will continue to function as a conventional (analogue) AM/FM receiver. Please note that when HD is switched off, it will not be possible to tune to sub-channels (see the following section for a more detailed explanation of sub-channels).

Repeat steps 2 and 3 above to reactivate HD (an X will appear in the box on the display screen).

Sub-channels

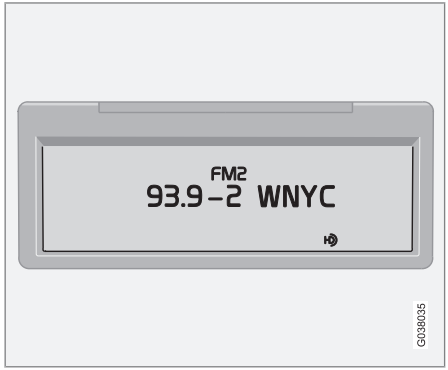

Example of an HD Radio station with sub-channels

In many cases, a main HD Radio station (FM wavebands only) will also have sub-channels offering additional types of programming or music.

In such cases, the “>” symbol will be displayed to the left of the frequency number and a number will be displayed to the right of the frequency number indicating that the currently tuned frequency has at least one sub-channel. The "2" in the illustration indicates that you are currently listening to the first sub-channel on frequency 93.9.

Selecting sub-channels

To listen to a station's sub-channel(s), press the right arrow key on the center console or on the steering wheel keypad. To go back to the main channel, press the left arrow key. To go to subchannel 2 (if available), press the right arrow key.

If you are currently tuned to a frequency's main channel, pressing the left arrow key will tune to the next lower radio frequency.

NOTE

- When the radio has gone into HD mode, it may take several seconds before the ">" symbol (if the current frequency has any sub-channels) is displayed to the right of the frequency. Pressing the arrow keys before the number is displayed will cause the radio to tune to the next available radio station, not to the current station's sub-channels.
- When you are no longer in broadcasting range of the currently tuned **sub-channel**, **No HD reception** will be displayed. The radio will then be muted and it will be necessary to tune to or search for a new radio station.

Sub-channels can also be stored as presets, see page 243 for information on storing stations.

If you press a sub-channel's preset button, it may take up to **6 seconds** before the channel becomes audible. If you press this button while you are out of digital range of the transmitter, **No HD reception** will be displayed.

Listening to satellite radio

The Sirius satellite system consists of a number of high elevation satellites in geosynchronous orbit.

NOTE

- The digital signals from the Sirius satellites are line-of-sight, which means that physical obstructions such as bridges, tunnels, etc, may temporarily interfere with signal reception.
- Avoid any obstructions, such as metallic objects transported on roof racks or in a ski box, or other antennas that may impede signals from the SIRIUS satellites.

Selecting Sirius radio mode

1. Press Power to switch on the audio system (see page 243 for information on the standard radio functions).
2. Press the **MODE** button repeatedly until Sirius 1 or 2 is displayed.

Activating Sirius radio

1. Tune to a satellite channel that has no audio, which means that the channel is unsubscribed and the text "**Call 888-539-SIRIUS TO SUBSCRIBE**" is displayed

Radio functions

(see also "Selecting a channel" in the right column).

2. Call Sirius at 1-888-539-SIRIUS (7474).
3. When asked for the Sirius ID number press **AUTO** to display this number. It is also possible to retrieve the Sirius ID from the MENU.
4. "**UPDATING SUBSCRIPTION**" will be displayed while the subscription is being updated, after which the display will return to the normal view.

SIRIUS ID

The SIRIUS ID is required when contacting the Sirius Call Center. It is used to activate your account and when making any account transactions. The SIRIUS ID is sometimes referred to as the Electronic Serial Number (ESN).

Selecting a channel category

1. Select Sirius radio mode as described above.
2. Press **ENTER**.
3. Use the up/down arrow keys to scroll through the list of categories.
4. Press **ENTER** or the right arrow key to select a category.
5. Use the left or right arrow keys to select a channel in the currently chosen category.
6. Press **ENTER** to listen to a channel.

NOTE

- The category "All" is default, which enables you to scroll through the entire list of available satellite channels.
- The channel categories are automatically updated several times a year. This takes approximately two minutes and will interrupt normal broadcasting. A message will be displayed while updating is in progress. Information on channel or feature updates is available at www.sirius.com.

Selecting a channel

There are three ways of tuning in a channel:

- Using the left and right arrow keys
- By turning the tuning control
- Through direct channel entry

Direct channel entry

The Sirius satellite channels are numbered consecutively throughout all of the categories. To access a channel directly:

1. Press **MENU** and scroll to "Direct channel entry."
2. Use the numerical keypad to enter the channel's number.
3. Press **ENTER**. The radio will tune to this channel, even if it belongs to a category other than the currently selected one.

NOTE

- The numbers of skipped or locked channels will not be displayed.
- If a channel is locked, the access code must be entered before the channel can be selected. See "Unlocking a channel" on page 249.

Scanning

NOTE

SCAN automatically searches through the list of satellite channels, see page 244 for more detailed information.

Storing a channel

- A **long** press on one of the number keys stores the currently tuned channel on that key.
- A **short** press on a number key while the radio is in Sirius 1 or 2 mode will tune to the

preset satellite channel stored on that button, regardless of the currently selected channel category.

Song Seek and Song Memory

The Song Seek and Song Memory functions provide both audio and visual notification when Sirius is broadcasting your favorite songs. Song Seek enables you to store the name of the song for future advance notification when that song is being played. The Song Memory feature makes it possible to view all of the current songs that are stored in memory.

Song memory

Up to ten songs can be saved in the system's memory.

1. Press **MENU**.
2. Scroll to "**Add song to song mem.**" and follow the instructions shown in the display.

If a new song is selected when the memory is full, you will be prompted to press **ENTER** to delete the last song on the list.

NOTE

The remaining songs in the list will move down one position, and the newly added song will be placed at the top of the list.

Song seek

When a satellite radio channel plays one of the songs stored in the song memory, the listener will be alerted by a text message and an audible signal.

– Press **ENTER** to listen to the song or **EXIT** to cancel.

To activate/deactivate the song seek function:

1. Press **MENU**
2. Scroll to "**Song seek**"
3. Press **ENTER** to activate or deactivate the function.

NOTE

When the song has ended, the radio will remain tuned to the channel on which the song was played.

Radio text

The text that is displayed about the song that is currently playing can be changed. Use the **AUTO** button or the menu to display the **Artist, Title, Composer**, or switch **radio text off**.

Advanced settings

This menu function enables you to make settings on certain Sirius satellite radio functions. To access this menu:

1. Press **MENU**.
2. Scroll to Sirius menu.
3. Select **Advanced Sirius settings**.

WARNING

Settings should be made when the vehicle is at a standstill.

The following settings can be made in the Sirius menu.

- Songs can be added to the song list
- Channel skip settings can be made
- Channel lock settings can be made
- The channel access code can be displayed or changed
- Your Sirius ID can be displayed

Skip options

This function is used to remove a channel from the list of available channels.

Skip current

1. Select **CHANNEL SKIP LIST** and press **ENTER**.

Radio functions

2. Select a category in the list and press **ENTER**.
3. Skip channels in the list presented by pressing **ENTER** or right arrow key.

Unskip all channels
This permanently removes all channels from the skip list and makes them available for selection.

Temp. unskip all ch.
This function will temporarily unskip all channels and make them available for selection. The channels remain on the skip list and will again be skipped the next time the ignition is switched on.

Channel lock
Access to specific channels can be restricted (locked). A locked channel will not provide audio, song titles, or artist information.

NOTE

All channels are initially unlocked.

Locking a channel
1. Select "Sirius ID" in the menu and select LOCK OPTIONS and press **ENTER**.
2. Select CHANNEL LOCK LIST and press **ENTER**
3. Enter the channel access code and press **ENTER**.
4. Select a category in the list and press **ENTER**.
5. Lock channels in the list presented by pressing **ENTER** or right arrow.

The channel is now locked and a checked box will be displayed to indicate this. It will be necessary to enter the channel access code1 in order to listen to a locked channel.

Unlocking a channel:
A channel's access code1 is required to unlock a channel.

Unlock all channels
This permanently removes all channels from the locked list and makes them available for selection.

Temp. unlock all ch.
This function will temporarily unlock all channels and make them available for selection. The channels remain on the locked list and will again be locked the next time the ignition is switched on.

CHANGE CODE
This function makes it possible to change the channel access code. The default code is 0000.

To change the code:

1. Select CHANGE CODE and press **ENTER**.
2. Enter the current code and press **ENTER**.
3. Enter the code and press **ENTER**.
4. Confirm the new code and press **ENTER**.

If an incorrect code is entered, the text WRONG CODE! is displayed.

If you have forgotten the access code:

1. Select "SIRIUS ID" in the Sirius settings menu and press **ENTER**.
2. Press and hold the **ENTER** button for 2 seconds.
3. The current code will be displayed.

Your Volvo retailer can also provide you with assistance.

SIRIUS ID
This function displays the 12-digit Sirius activation ID.

CD function controls

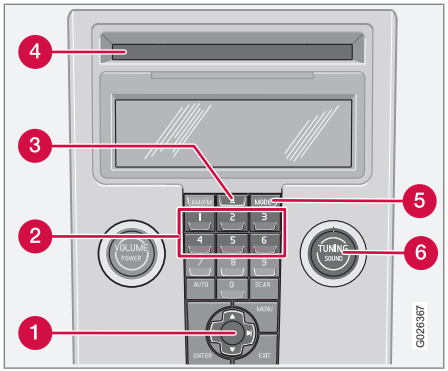

1. **MENU NAVIGATION CONTROL**–press the up or down arrow keys to scroll in a menu, or the keys on the left/right sides of the control to change CD tracks/fast forward/back
2. **Buttons for selecting a disc** in the optional CD changer
3. **CD eject** button
4. **CD slot**
5. **MODE** button
6. **TUNING** dial for selecting tracks

Playing a CD

Single CD player

Start the CD player by pressing the **MODE** button (5) and inserting a disc in the slot (4). If there is already a disc inserted, it will begin to play.

NOTE

If a CD is in the slot when the audio system is in CD mode, the CD will be played automatically.

CD changer*

The CD changer can hold up to six discs.

1. Start the CD changer by pressing the **MODE** button (5).
2. Select an empty position using the 1 – 6 buttons or the up/down keys on the MENU NAVIGATION CONTROL. The display shows which positions are empty.
3. Insert a disc into the slot (4).

NOTE

- Ensure that **INSERT DISC** is displayed before inserting a disc.
- If a CD position in the changer containing a disc is selected, and the audio system is in CD mode when it is switched on, the CD will play automatically.

CD eject

Eject from Single CD player

– Press the eject button (3) to eject the disc.

Eject from CD changer

This function makes it possible to eject a single disc, or to eject all of the discs in the changer.

– Press the eject button (3) briefly to eject the disc that is currently playing.

– A longer press (more than two seconds) starts the process of ejecting all of the discs in the changer.

CD player/CD changer

NOTE

- The EJECT ALL function can only be used while the vehicle is at a standstill and will be cancelled if the vehicle begins to move.
- For reasons of traffic safety, the ejected CD must be removed within 12 seconds or it will be automatically drawn back into the slot and the CD player will enter pause mode. Press the **CD** button to restart the disc.

CD Pause

When the audio system volume is turned off completely, the CD player will pause and will resume playing when the volume is turned up again.

Audio files

In addition to playing normal music CDs, the CD player/changer can also play discs containing files in mp3 or wma format.

NOTE

Certain discs that are copy protected cannot be read by the player.

When a disc with audio files is inserted in the player, the player scans the disc's folders before it begins playing the files. The length of time that this takes depends on the quality of the disc.

Navigating the disc and playing tracks

If a disc with audio files is in the CD player, press **ENTER** to display a list of folders on the disc.

Use the up and down arrows in the navigation control (see the illustration on page 251) to move among the folders on the disc. Audio files have the ♩ symbol and folders containing these files have the 🗀 symbol. Press **ENTER** to play a selected folder or a file.

When the music file has been played, the player will continue to play the rest of the files in the current folder. When all of the files in the folder have been played, the player will automatically go to the next folder and play the files in it.

Press the left or right arrow key on the navigation control if the entire name of the current track does not fit in the display.

Changing tracks

Briefly press the left or right arrow keys on the MENU NAVIGATION CONTROL to skip to the previous or next track/file.

NOTE

The **TUNING** dial (6) (turn clockwise to go to the next track/file, or counterclockwise to go to the previous track/file) or the steering wheel keypad can also be used for this purpose.

Fast forward/back

– Press and hold down the left or right arrows keys in the menu navigation control (or the corresponding keys on the optional steering wheel keypad) to search within a track/file or the whole disc. The search continues for as long as the buttons are held down.

Random play

This function plays the tracks/files on a CD (or on all of the CDs if the vehicle is equipped with the optional CD changer) in random order (shuffle).

Activating/deactivating the random function-CD player

If a normal CD is being played:

1. Press **MENU** followed by **ENTER**.
2. Select Random and press **ENTER**.

If a CD with audio files is being played:

1. Press **MENU** followed by **ENTER**.
2. Select **Random** and press **ENTER**.

3. Select **Disc** or **Folder** and press **ENTER**.

Activating/deactivating the random function-CD changer

If a normal CD is being played:

1. Press **MENU** followed by **ENTER**.
2. Select **Random** and press **ENTER**.
3. Select **Single disc** or **All discs** and press **ENTER**.

If a CD with audio files is being played:

1. Press **MENU** followed by **ENTER**.
2. Select **Random** and press **ENTER**.
3. Select **Single disc** or **Folder** and press **ENTER**.

NOTE

CD changer only–you can only select the next random track/file on the current disc.

Press the **EXIT** button to stop random play. The random function is automatically deactivated when another disc is selected.

Disc text (CD changer only)

Certain CDs contain information about the disc, such as the titles of the tracks, etc. This information can be shown in the display by activating the DISC TEXT function.

1. Press **MENU**. Select the menu for relevant sound source and press **ENTER**.
2. Select **Disc text** in the menu and press **ENTER**.
   > If information is stored on the disc, it will now appear in the display.

To deactivate this function, select **Disc text** in the menu and press **ENTER**.

Scan

This function plays the first 10 seconds of each track/file on the CD.

– Press **SCAN**.

– Press **EXIT** or **SCAN** to stop the scan function and listen to an entire track/file.

CD eject

Single CD player

Press the eject button (3) to eject the disc.

CD changer

This function makes it possible to eject a single disc, or to eject all of the discs in the changer.

- Press the eject button (3) briefly to eject the disc that is currently playing.
- A longer press (more than two seconds) starts the process of ejecting all of the discs in the changer.

NOTE

- The Eject all function can only be used while the vehicle is at a standstill and will be cancelled if the vehicle begins to move.
- For reasons of traffic safety, the ejected CD must be removed within 12 seconds or it will be automatically drawn back into the slot and the CD player will enter pause mode. Press the **CD** button to restart the disc.

Compact disc care

Keep the following in mind when playing/handling compact discs

- Do not put tape or labels on the disc itself. They could become stuck in the player.
- CDR discs can cause listening problems due to the quality of the disc or recording equipment used.
- DualDisc: The audio side of a DualDisc (combined CD/DVD) does not meet CD specifications and may not play in your audio system.
- Keep the discs clean. Wipe them with a soft, clean, lint-free cloth, working from the center outward. If necessary, dampen the cloth with a neutral soap solution. Dry thoroughly before using.

CD player/CD changer

- Never use cleaning spray or antistatic liquid. Use only cleaners specifically made for CDs.
- Use discs of the correct size only (3.5" discs should never be used).
- Volvo does not recommend the use of plastic outer rings on the disc.
- Condensation may occur on discs/optical components of the changer in cold winter weather. The disc can be dried with a clean, lint-free cloth. Optical components in the CD changer may, however, take up to one hour to dry off.
- Never attempt to play a damaged CD.
- When not in use, the discs should be stored in their covers. Avoid storing discs in excessive heat, direct sunlight or in dusty locations.

FM1/FM2 menu

1. RADIOTEXT ON/OFF
2. ADVANCED RADIO SETTINGS
3. AUDIO SETTINGS

AM menu

1. AUDIO SETTINGS

CD menu

1. RANDOM
2. AUDIO SETTINGS

CD changer menu

1. RANDOM
2. DISC TEXT ON/OFF
3. AUDIO SETTINGS

AUX menu

1. AUX VOLUME
2. SOUND SETTINGS

Bluetooth® hands-free connection

Introduction

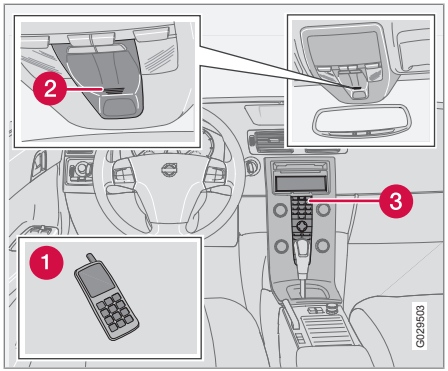

System overview

1. Cell phone
2. Location of the microphone
3. Center console control panel and display

Bluetooth® hands-free

This feature makes it possible to set up a wireless connection between a Bluetooth®-enabled cell phone and the vehicle's audio system. This enables the audio system to function as a hands-free connection and allows you to remote-control a number of the phone's functions. The microphone used by this system is located in the ceiling console (2). The buttons and other controls on the cell phone can always be used regardless of whether or not the phone is connected to the hands-free system.

NOTE

Not all cell phones are fully compatible with the hands-free system. A list of compatible phones is available at your Volvo retailer or at www.volvocars.us

WARNING

Never use the hands-free feature or any other device in your vehicle in a way that distracts you from the task of driving safely. Distraction can lead to a serious accident.

Getting started

Use the controls in the center console (3) to access, navigate and make selections in the hands-free system's menus (see page 260).

Activating/deactivating

A short press on the **PHONE** button in the center console activates the hands-free system. The text **TELEPHONE** will appear at the top of the display to indicate that the audio system is in telephone mode.

The symbol indicates that the hands-free system is active.

A long press on the **PHONE** button deactivates the hands-free system and disconnects the cell phone.

Connecting cell phones

The procedure for connecting a cell phone varies, depending on the phone itself, and on whether or not the phone has been previously connected.

If this is the first time the phone is to be connected to the hands-free system, proceed as follows:

Alternative 1–using the vehicle's menus

1. Activate the cell phone's Bluetooth® function (refer to the phone's owner's manual if necessary) or go to www.volvocars.com
2. Activate the vehicle's Bluetooth® hands-free system by briefly pressing the **PHONE** button.
   > **Add phone** will be displayed. If one or more cell phones are already registered in the system, they will also be displayed.
3. Select **Add phone**.

> The audio system will search for cell phones that are in range. This search takes approximately 30 seconds. Any phones detected will be displayed with their Bluetooth® names. The hands-free system's Bluetooth® name will appear in the cell phone's display as My Car.

4. Select one of the cell phones shown in the audio system's (center console) display.
5. Using the cell phone's keypad, enter the digits shown in the audio system's display.

Alternative 2–using the cell phone's menus

1. Activate the hands-free system by briefly pressing the **PHONE** button in the center console. If there is a cell phone connected, disconnect it from the hands-free system (by pressing **PHONE** in the center console for several seconds).
2. Perform a search using the cell phone's Bluetooth® function (consult the cell phone's owner's manual if necessary).
3. Select My Car in the list of devices shown in the cell phone's display.
4. When prompted, enter the PIN code 1234 in the cell phone.
5. Connect to My Car from the cell phone.

The cell phone will be registered and will be connected automatically to the audio system while the text Synchronising is displayed. For more information on synchronizing a cell phone, see page 259.

When a connection has been established, the symbol and the cell phone's Bluetooth® name will be displayed. The cell phone can now be controlled from the audio system.

Making a call

1. Ensure that TELEPHONE is shown at the top of the center console display and that the symbol is visible (by pressing briefly on **PHONE** on the center console).
2. Dial the desired phone number or use the phone book (see page 259).
3. Press **ENTER.**

End the call by pressing **EXIT.**

Disconnecting the cell phone

The cell phone is automatically disconnected from the audio system if it is moved out of range. For more information about connections, see page 256.

The cell phone can be manually disconnected from the hands-free system by pressing **PHONE**. The hands-free system is also deactivated when the ignition is switched off (or if the driver's door is opened on vehicles equipped with the optional keyless drive).

When the cell phone is disconnected from the hands-free system, a call in progress can be continued using the cell phone's own speaker and microphone.

NOTE

Certain cell phones may require confirmation from the phone's keypad when a call is transferred from hands-free to the cell phone.

Handling calls

Incoming calls

– Press **ENTER** to answer a call, even if the audio system is currently in e.g., CD or FM mode.
– Press **EXIT** to defer a call.

Automatic answer

This function means that incoming calls will be answered automatically. Activate or deactivate the function in the menu system under Phone settings ➔ Call options ➔ Automatic answer.

Bluetooth® hands-free connection

Call settings

While a call is in progress, press **MENU** or **ENTER** on the center console to access the following functions:

- Microphone off–mute the audio system's microphone.
- Transfer call to mobile–transfer the call from hands-free to the cell phone.
- Phone book–this feature enables you to search for a stored telephone number.

NOTE

- On certain cell phones, the connection is broken when the mute function is used, which is normal. If this happens, the hands-free system will prompt you to reconnect.
- A new call cannot be initiated while another call is in progress.

Sound settings

Call volume

Call volume can be adjusted when the hands-free system is activated. Use the buttons in the steering wheel keypad or the audio system's volume control.

Audio system volume

While a phone call is in progress, volume for the audio system can be adjusted in the normal way with the audio system's volume control. In order to adjust volume during a phone call, the audio system must be switched to one of the other modes (FM, CD, etc).

Audio system sound can be automatically muted when a phone call is received in Phone settings ➔ Sounds and volume ➔ Mute radio and adjust the volume with the ▲ / ▼ keys on the center console.

Ringing volume

Go to Phone settings ➔ Sounds and volume ➔ Ring volume and adjust the volume with the ▲ / ▼ keys on the center console.

Ringing tones

The hands-free system's integrated ringing tones can be selected in Phone settings ➔ Sounds and volume ➔ Ring signal ➔ Ring signal 1,2,3....

NOTE

The connected cell phone's ring tone is not switched off when one of the hands-free system's ringing tones is used.

If you prefer to use the connected cell phone's ring tone[1], go to Phone settings ➔ Sounds and volume ➔ Ring signal ➔ Use mobile phone signal

More information about registering and connecting cell phones

A maximum of 5 cell phones can be registered in the hands-free system. Registration only needs to be done once for each phone. After registration, the cell phone no longer needs to be in sight or searchable. Only one cell phone can be connected to hands-free at a time.

Phones can be unregistered in Bluetooth ➔ Remove telephone

Automatic connection

When the hands-free system is active and the most recently connected cell phone is within range, it is detected automatically. When the

[1] Not supported by all cell phones.

audio system searches for the most recently connected phone, this phone's name appears in the display. To manually connect a different cell phone, press **EXIT.**

Manual connection

To connect a phone other than the one that was most recently connected or to switch between cell phones that are already registered in the hands-free system:

1. Put the audio system in telephone mode.
2. Press **PHONE** in the center console and select one of the phones on the list.

A connection can also be established in the menu system under **Bluetooth ➔ Connect phone** or **Change phone**.

Phone book

In order to use the hands-free system's phone book (list of contacts), **TELEPHONE** must be displayed at the top of the center console display and the symbol must be visible.

The audio system stores a copy of the phone book of each registered cell phone. The phone book is automatically copied each time a phone is connected. This function can be activated in **Phone settings ➔ Synchronise phone book**. Searches for contacts are only made in the phone book of the currently connected cell phone.

NOTE

If a particular cell phone does not support copying of the phone book, **List is empty** will be displayed when copying has been completed.

If the phone book contains information about someone who is trying to call you, this information will be shown in the display.

Searching for contacts

The easiest way to search for a contact in the phone book is to press and hold any of the buttons **2–9** (see the illustration on page 256). This starts a search based on the first letter on the button that has been pressed.

The phone book can also be accessed by pressing the navigation buttons ▼ / ▲ on the center console or by pressing |◀ / ▶| on the steering wheel keypad. A search can also be made in the phone book's search menu in **Phone book ➔ Search**:

1. Enter the first letter of the contact's name and press **ENTER** or simply press **ENTER.**
2. Select the desired contact and press **ENTER** to make a call to that person.

Voice control

If the cell phone that is currently connected allows calls to be made via voice commands, this function can be used by pressing and holding **ENTER.**

Voice mail number

The phone number to your voice mail can be changed in the menu **Phone settings ➔ Call options ➔ Voice mail number**. If no number has been stored, this menu can be accessed by a prolonged press on button **1**. Once a phone number has been stored, press and hold **1** to dial this number.

Call lists

Lists of calls in a particular cell phone are copied to the hands-free system each time that phone is connected. These lists are then updated while the phone is connected. Press **ENTER** to show the most recently dialed numbers. Other call lists can be found under **Call register**.

NOTE

Certain cell phones display the list of the most recently dialed numbers in reverse order.

Bluetooth® hands-free connection

Entering text

Text is entered by using the number buttons in the center console. Press a button once to enter the first letter on the button, twice to enter the second letter, etc. Continue to press the button to display other characters.

Press **EXIT** briefly to erase a character. Press and hold **EXIT** to erase all of the characters that have been entered. Use the ▲ / ▼ buttons on the center console to navigate among the characters.

Button	Function
1	Space .1-? ! , : " ' ( )
2 ABC	A B C 2 Ä Å À Æ Ç
3 DEF	D E F 3 È É
4 GHI	G H I 4 Ì
5 JKL	J K L 5
6 MNO	M N O 6 Ñ Ö Ò Ø
7 PQRS	P Q R S 7 ß
8 TUV	T U V 8 Ü Ù
9 WXYZ	W X Y Z 9
AUTO *	Press briefly if two characters are to be entered in succession from the same button.
0 +	+ 0 @ * # & $ £ / %
SCAN #	Shift between uppercase and lowercase letters

Bluetooth® menus

1. **Missed calls**
2. **Received calls**
3 **Dialed calls**
4. **Phone book**
   - 4.1. Search
   - 4.2. Copy fr. mobile phone
5. **Bluetooth...**
   - 5.1. Change phone
   - 5.2. Connect phone
   - 5.3. Disconnect phone
   - 5.4. Connect fr. mobile phone
6. **Phone settings**
   - 6.1. Call options
     - 6.1.2. Automatic answer
     - 6.1.3. Voice mail number
   - 6.2. Sounds and volume
   - 6.3. IDIS
   - 6.4. Synchronize phone book

10

Label information..... 264
Dimensions and weights..... 266
Fuel, oils, and fluids..... 269
Engine oil..... 271
Engine specifications..... 272
Electrical system..... 274
Three-way catalytic converter..... 276
Volvo programs..... 277

G000000

SPECIFICATIONS

11

Label information

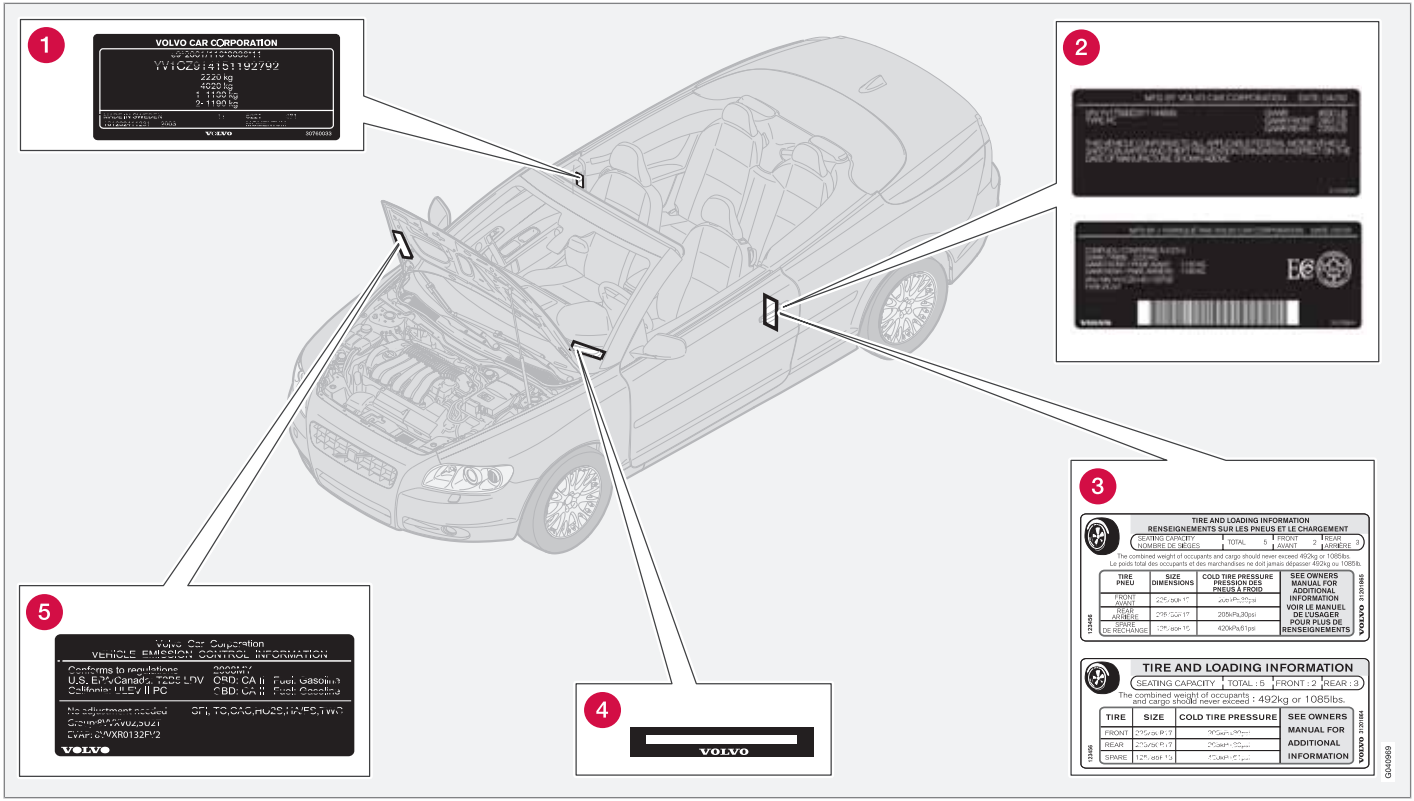

Label information

1 Model plate
Vehicle Identification Number (VIN). Codes for color and upholstery, etc.

2 Federal Motor Vehicle Safety Standards (FMVSS) specifications (USA) and Ministry of Transport (CMVSS) standards (Canada)
Your Volvo is designed to meet all applicable safety standards, as evidenced by the certification label on the driver's side B-pillar (the structural member at the side of the vehicle, at the rear of the driver's door opening). For further information regarding these regulations, please consult your Volvo retailer.

3 Loads and Tire Pressures
The appearance of the decal will vary, depending on the market for which the vehicle is intended.

Canadian models have the upper decal.

U.S. models have the lower decal.

4 Vehicle Identification Number (VIN)[1]
The VIN plate is located on the top left surface of the dashboard. The VIN is also stamped on the right hand door pillar.

5 Vehicle Emission Control Information
Your Volvo is designed to meet all applicable emission standards, as evidenced by the certification label on the underside of the hood. For further information regarding these regulations, please consult your Volvo retailer.

[1] The Vehicle Identification Number (VIN) should always be quoted in correspondence concerning your vehicle with the retailer and when ordering parts.

Dimensions and weights

Dimensions

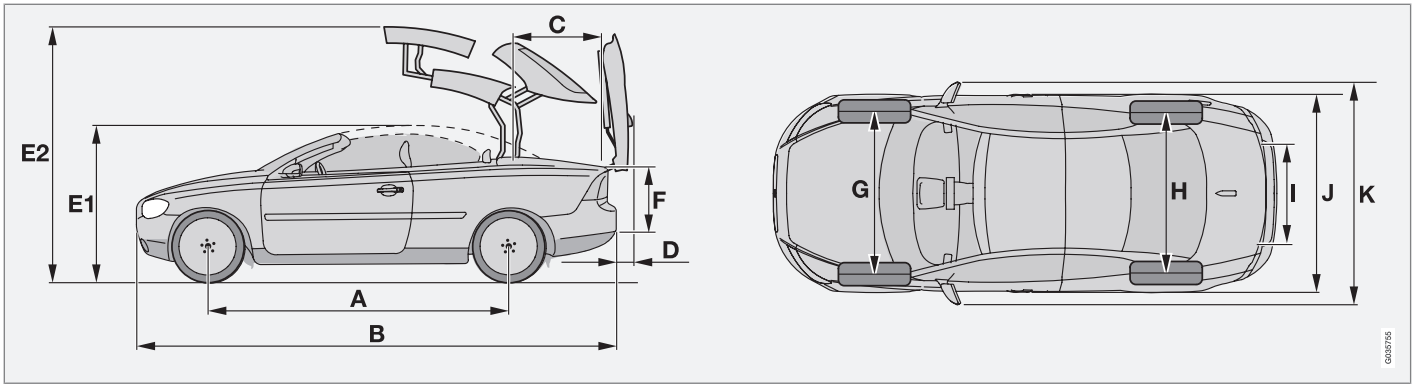

Position	Dimension	
A	Wheelbase	103.9 in. (264 cm)
B	Length	175.9 in. (447 cm)
C	Load length, floor	33.5 in. (85 cm)
D	Trunk lid up	7.9 in. (20 cm)
E1	Height	57.2 in. (145 cm)
E2	Height	78.7 in. (200 cm)
F	Load height, roof up Load height, roof down	20.4 in. (52 cm) 10.2 in. (26 cm)

Dimensions and weights

Position	Dimension	
G	Track, front	60.1 in. (155 cm)
H	Track, rear	61.4 in. (156 cm)
I	Load width, floor	28 in. (71 cm)
J	Width	72.3 in. (184 cm)
K	Width encl. door mirrors	79.6 in. (202 cm)

Weights

Category	USA	Canada
Gross vehicle weight	Manual: 4540 lbs Automatic: 4560 lbs	2060 kg 2070 kg
Capacity weight	All models: 640 lbs	290 kg
Permissible axle weight, front	All models: 2440 lbs	1110 kg
Permissible axle weight, rear	All models: 2370 lbs	1075 kg
Curb weight	All models: 3770–3800 lbs	1710–1725 kg
Max. trailer weight (w/o brakes)	All models: 1540 lbs	All models: 700 kg
Max. trailer weight (with brakes)	All models: 2000 lbs	All models: 900 kg
Max. tongue weight	All models: 165 lbs	All models: 75 kg

Dimensions and weights

CAUTION

The maximum permissible axle loads and/ or the gross vehicle weight must not be exceeded.

WARNING

When adding accessories, equipment, luggage and other cargo to your vehicle, the total capacity weight must not be exceeded.

Specifications and capacities

Category	Specification	Capacity
Fuel tank	Octane rating: unleaded gasoline, minimum octane requirement AKI 87, recommended rating AKI 91 or above.	15.9 US gallons (60 liters)
Engine oil (with filter replacement)	See page 271 for information on engine oil specifications.	6.1 US quarts (5.8 liters)
Automatic transmission oil	JWS 3309	8.14 US quarts (7.7 liters)
Manual transmission oil	BOT 350 M3	6-speed: 2.0 US quarts (1.9 liters) – turbo models
Coolant	Volvo original coolant/antifreeze (50/50 mixture of water and anti-freeze)	10.5 US quarts (10 liters) – models with automatic transmission 10 US quarts (9.5 liters) – models with manual transmission
Brake fluid	DOT 4+ boiling point >536 °F (280 °C), P/N 9437433	0.63 US quarts (0.6 liters)
Power steering fluid	WSS M2C204-A or equivalent	1.3 US quarts (1.2 liters) – system and reservoir combined
Washer fluid reservoir	Use washer fluid solvent in cold weather conditions.	6.8 US quarts (6.5 liters)
Air conditioning system	Refrigerant – R134a	1.2 lbs. (530 grams)

Fuel, oils, and fluids

NOTE

The transmission oil does not normally need to be changed during the service life of the vehicle. However, it may be necessary to replace the oil if the vehicle is often driven in areas of sustained temperature extremes (hot or cold), when towing a trailer over long distances, for prolonged driving in mountainous areas, or if the vehicle is often driven short distances in temperatures under 40 °F (5 °C).

Oil specifications

Engine oil must meet the minimum ILSAC specification GF-4, API SL, or ACEA A1/B1. Lower quality oils may not offer the same fuel economy, engine performance, or engine protection.

Volume: 6.1 US qts (5.8 liters).

Volume between the MIN and Max marks on the dipstick: approximately 1.4 US qts (1.3 liters).

Volvo recommends Castrol.

Depending on your driving habits, premium or synthetic oils may provide superior fuel economy and engine protection. Consult your Volvo retailer or a trained and qualified Volvo service technician for recommendations on premium or synthetic oils.

Oil additives must not be used.

NOTE

Synthetic oil is not used when the oil is changed at the normal service intervals. This oil is only used at customer request, at additional charge. Please consult a trained and qualified Volvo service technician.

Oil viscosity

Incorrect viscosity oil can shorten engine life under normal use. SAE 5W-30 will provide good fuel economy and engine protection. See the viscosity chart.

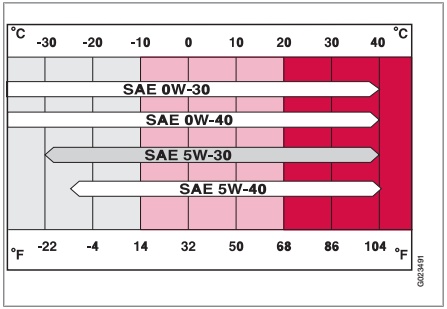

Viscosity chart

Extreme engine operation

Synthetic oils meeting SAE 0W-30 or 0W-40 and complying with oil quality requirements are recommended for driving in areas of sustained temperature extremes (hot or cold), when towing a trailer over long distances, and for prolonged driving in mountainous areas.

American Petroleum Institute (API) symbol

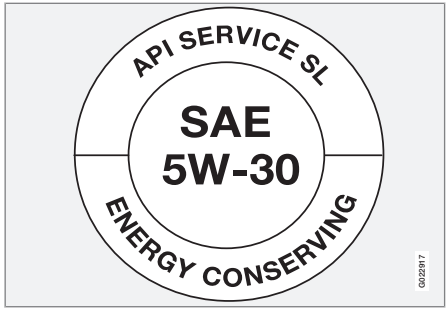

The API Service Symbol "donut" is divided into three parts:

- The upper section describes the oil's performance level.
- The center identifies the oil's viscosity.
- The lower section indicates whether the oil has demonstrated energy-conserving properties in a standard test in comparison to a reference oil.

Engine specifications

Engine designation	B5254T7
Output[A]	
kW/rps	169/83
hp/rpm	227/5000
Torque[A]	
Nm/rps	320/25-80
ft. lbs./rpm	236/1500-4800
No. of cylinders	5
Displacement (liters/cubic inches)	2.52/153.8
Bore (mm/in.)	83/3.27
Stroke (mm/in.)	93.2/3.67
Compression ratio	9.0:1
Spark plugs	
type	Volvo kit no. 30650379
gap inches/mm	0.027 in./0.7mm
tightening torque ft. lbs./Nm	22.5 ft. lbs./30 Nm

[A] The engine specifications for output and torque listed in this table are based on the use of premium fuel.

Charge air cooler (Intercooler)

Turbocharged engines employ a turbo-compressor to force air into the engine inlet manifold and a charge air cooler to cool the compressed inlet air. The resulting increase in air flow raises pressure in the intake manifold and increases engine power over that developed by the normally-aspirated engine. The charge air cooler (which resembles a radiator) is located between the turbo-compressor and inlet manifold.

Fuel system
The engine is equipped with a multiport fuel injection system.

Electrical system

General information

12-volt system with voltage controlled generator. Single wire system in which the chassis and engine block are used as conductors, grounded on the chassis.

Battery

Voltage	12 V	12 V
Cold start capacity (CCA)	600 A[A]	700 A[B]
Reserve capacity (RC)	120 min	135 min
Capacity (Ah)	70	80

[A] Models equipped with the High Performance audio system.
[B] Models equipped with the Premium Sound audio system, the Volvo Navigation System and/or keyless drive.

If the battery must be replaced, replace it with one with the same cold start capacity and reserve capacity as the original (see the decal on the battery).

WARNING

PROPOSITION 65 WARNING!

Battery posts, terminals, and related accessories contain lead and lead compounds, chemicals known to the state of California to cause cancer and reproductive harm. Wash hands after handling.

Bulbs used in the car

Bulb	Output	Type
Low beam headlight	55W	H7
High beam headlight	55W	H9
Extra high beam (models with Dual Xenon headlights only)	55W	H7

Electrical system

Bulb	Output	Type
Brake light, back-up light, rear fog light	21W	P21W
Turn signal, front/rear	21W	PY21W
Turn signal, front/rear (applies to models with halogen headlights)	24W	P21/5W
Rear parking light, side marker light	4W	P21/4W
Footwell lighting, cargo compartment light, license plate lighting	5W	C5W
Vanity mirror	1.2W	Festoon
Front parking light, side turn signal	5W	W5W
Front fog light*	55W	H11
Glove compartment light	3W	Festoon

NOTE

For information regarding any other bulbs not mentioned in this section, please contact your Volvo retailer or a trained and authorized Volvo service technician.

Three-way catalytic converter

Three-way catalytic converter – general information

- Keep your engine properly tuned. Certain engine malfunctions, particularly involving the electrical, fuel or distributor ignition systems, may cause unusually high three-way catalytic converter temperatures. Do not continue to operate your vehicle if you detect engine misfire, noticeable loss of power or other unusual operating conditions, such as engine overheating or backfiring. A properly tuned engine will help avoid malfunctions that could damage the three-way catalytic converter.
- Do not park your vehicle over combustible materials, such as grass or leaves, which can come into contact with the hot exhaust system and cause such materials to ignite under certain wind and weather conditions.
- Excessive starter cranking (in excess of one minute), or an intermittently firing or flooded engine can cause three-way catalytic converter or exhaust system overheating.
- Remember that tampering or unauthorized modifications to the engine, the Electronic Control Module, or the vehicle may be illegal and can cause three-way catalytic converter or exhaust system overheating. This includes:

NOTE

Unleaded fuel is required for vehicles with three-way catalytic converters.

Volvo On Call Roadside Assistance

Your new Volvo comes with a four year ON CALL roadside assistance. Additional information, features, and benefits are described in a separate information package in your glove compartment.

If you require assistance, dial:

In the U.S. 1-800-638-6586 (1-800-63-VOLVO)

In Canada 1-800-263-0475

Technician certification

In addition to Volvo factory training, Volvo supports certification by the National Institute for Automotive Service Excellence (A.S.E.). Certified technicians have demonstrated a high degree of competence in specific areas. Besides passing exams, each technician must also have worked in the field for two or more years before a certificate is issued. These professional technicians are best able to analyze vehicle problems and perform the necessary maintenance procedures to keep your Volvo at peak operating condition.

1, 2, 3 ...

12-volt socket..... 114
12-volt sockets..... 58

A

A/C (air conditioning)..... 82
ABS (anti-lock brake system)..... 150
Airbags
- front..... 22
- inflatable curtain..... 30
- side impact..... 29

Airbag system..... 22
Air conditioning..... 82
Air distribution table..... 88
Air vents..... 84
Alarm system..... 130
- turning off sensors..... 131

Anti-lock Brake System (ABS)..... 150
Approach lighting..... 76
Audio files..... 252
Audio system
- audio functions..... 238
- automatic sound control..... 242
- AUX port..... 238
- CD changer..... 251
- CD player/changer..... 251
- compact disc care..... 253
- Dolby Surround Pro Logic II..... 241
- equalizer..... 241
- HD digital radio..... 245
- menu settings..... 255
- radio functions..... 243
- selecting a sound source..... 238
- Sirius satellite radio..... 247
- sound settings..... 240
- steering wheel keypad..... 239
- storing radio stations..... 243
- subwoofer..... 241
- USB/iPod® connector..... 239

Auto-dim rearview mirror..... 72
Autolock..... 75
Automatic locking retractor..... 34
Automatic sound control..... 242
Automatic transmission..... 147
- kickdown..... 148
- oil..... 269
- shiftlock override..... 149

Automatic transmission - Geartronic..... 148
AUX port..... 238
Axle weight..... 182, 267

B

Bass..... 240
Battery
- maintenance..... 219
- remote key, replacing..... 119
- specifications..... 274
- warning symbols..... 219

Battery – replacing..... 220
Black Box (Vehicle Event Data)..... 208
Blind Spot Information System (BLIS)..... 162
Bluetooth cell phone connection..... 256
Booster cushion
- accessory..... 41

Brake fluid..... 217, 269
Brake lights..... 59
Brake system
- anti-lock brakes (ABS)..... 150
- emergency brake assistance..... 151

fluid..... 217
general information..... 150
Bulbs
headlights..... 221
list of..... 274
Bulbs, replacing..... 221

C

Capacities, fluids..... 269
Capacity weight..... 182, 267
Catalytic converter, three-way..... 276
CD changer..... 251
CD player..... 251
Cell phone, hands-free connection..... 256
Central locking system - remote key..... 118
Chains..... 185
Changing a wheel..... 188
Child restraints
recalls and registration..... 43
Child restraint systems..... 35
booster cushions..... 41
ISOFIX/LATCH anchors..... 42
Child safety..... 33
booster cushions..... 41
child restraint systems..... 35
Climate system
air distribution..... 88
air vents..... 84
Electronic Climate Control..... 85
passenger compartment filter..... 82
refrigerant..... 82, 269
Climate system, general information..... 82
Clock
setting..... 75
Coat hanger..... 109
Cold weather precautions..... 137
Compact disc care..... 253
Compass in rearview mirror..... 72
Conserving electrical current..... 138
Convertible top (Power retractable hard top)..... 100
Coolant..... 269
changing..... 216
checking level of..... 216
Courtesy lighting..... 106
Crash mode..... 32
Cruise control..... 65
Cup holders..... 108, 111
Curb weight..... 182, 267

D

Detachable key blade..... 120
Detachable trailer hitch..... 160
Dimensions..... 266
Disconnecting the front passenger's air-bag..... 26
Display..... 56
Dolby Pro Logic II (DPL II)..... 241
Door mirrors..... 73
Door Mounted Inflatable Curtain system (DMIC)..... 30
Driving economically..... 136
Driving through water..... 136
DSTC, stability system..... 152

E

Economical driving..... 136
Electrical current – conserving..... 138

Electrical system..... 274
Electronic Brake Force Distribution (EBD)..... 151
Electronic Climate Control
air distribution table..... 88
Electronic Climate Control (ECC)..... 85
Emergency brake..... 70
Emergency locking retractor..... 34
Emergency starting..... 157
Emergency towing..... 154
Emission inspection readiness..... 210
Engine
specifications..... 272
starting..... 143
starting with keyless drive..... 145
Engine compartment overview..... 213
Engine oil..... 214
changing..... 214
checking..... 214
specifications..... 271
volumes..... 269
Equalizer, audio system..... 241
Eyelets for anchoring loads..... 114

F

Federal Clean Air Act..... 208
Flat tires
changing..... 188
repairing with tire sealing system..... 190
Fluids and oils..... 269
FM1/FM2 menu..... 243
Fog lights
front..... 59
rear..... 60
Front airbags..... 22
disconnecting passenger's side airbag 26
Front fog lights..... 59
Front park assist..... 166
Front seats..... 92
accessing the rear seat..... 92
adjusting the head restraints..... 98
manually operated..... 92
power..... 96
Fuel filler door
opening manually..... 60
unlocking..... 60
Fuel gauge..... 49
Fuel requirements..... 139
Fuel tank volume..... 269
Fuses, replacing..... 228

G

Gasoline requirements..... 139
Geartronic..... 148
Glossary of tire terminology..... 181
Glove compartment..... 109
locking..... 129
Gross vehicle weight (GVW)..... 182, 267

H

Hand brake (parking brake)..... 70
Hazard warning flashers..... 69
HD digital radio..... 245
Headlights..... 59
changing bulbs..... 221
high and low beams..... 61
high beam flash..... 61
Headlight washers..... 67
High beam flash..... 61

High beams..... 61
Hoisting the vehicle..... 210
Home safe lighting..... 61, 76
Hood, opening..... 212

I

Ignition switch..... 142
Immobilizer..... 143
Immobilizer (start inhibitor)..... 118
Indicator and warning symbols..... 49, 51
Inflatable Curtain..... 30
Inflation pressure..... 175
Inflation pressure, checking..... 176
Inflation pressure table
Canadian models..... 178
US models..... 177
Information display..... 49, 56
messages in..... 56
Information symbol..... 51
Inspection, preparing for..... 210
Inspection readiness..... 210
Instrument overview..... 46
Instrument panel..... 46, 49
Instrument panel lighting..... 60
Interior lighting..... 106
iPod® connector (audio system)..... 239
ISOFIX/LATCH anchors..... 42

J

Jacket hanger..... 109
Jump starting..... 157

K

Key (ignition switch) positions..... 142
Key blade..... 120, 125
Keyless drive
location of antennas (pacemaker warning)..... 126
locking and unlocking the vehicle..... 124
power seat memory..... 125
starting the engine..... 145
Keylock..... 143
Kickdown..... 148

L

Label information..... 264
LATCH (ISOFIX) anchors..... 42
Lighting panel..... 59
Load anchoring eyelets..... 114
Locking
from the inside..... 128
glove compartment..... 129
Locking the vehicle..... 124
Long distance trips..... 138
Long loads, ski hatch..... 115
Lug nuts (wheel nuts)..... 187

M

Maintenance..... 208
hoisting the vehicle..... 210
performed by the owner..... 210
Manual transmission..... 146
Mirrors..... 72
Model plate..... 265
Motor oil..... 214, 271
checking..... 214

O

Occupant safety..... 16
Occupant weight sensor..... 26
Octane recommendations..... 139
Oil..... 214
  changing..... 214
  checking..... 214
On Call Roadside Assistance..... 277
Opening the hood..... 212
Opening the trunk from the inside..... 129
Owner maintenance..... 210

P

Panel lighting, instrument..... 60
Park assist..... 166
Parking brake..... 70
Parking lights..... 59
Passenger's side front airbag, disabling... 26
Periodic owner-performed maintenance. 210
Permissible axle weight..... 182
Personal settings..... 75
Power door mirrors..... 73
Power front seat..... 96
  memory function..... 97
Power retractable hard top
  cover..... 104
  introduction..... 100
  messages..... 102
  operating..... 102
  trunk divider..... 101
  wind blocker..... 104
Power steering fluid..... 217
Power windows..... 71
Pregnancy, using seat belts during..... 19
Private locking..... 122

R

Radio
  Sirius satellite radio..... 247
Radio functions..... 243
  HD digital radio..... 245
Rain sensor - windshield wipers..... 68
Rear fog light..... 60
Rear park assist..... 166
Rearview mirror..... 72
  auto-dim function..... 72
Rearview mirror with compass..... 72
Recalls, child restraints..... 43
Refrigerant (A/C system)..... 82, 269
Refueling..... 141
  fuel tank volume..... 269
Registering child restraints..... 43
Remote key..... 118
  battery replacement..... 119
  functions..... 118
  key blade..... 120
Replacing fuses..... 228
Reporting safety defects
  Canada..... 17
  USA..... 16
Roll-over protection system (ROPS)..... 31

S

Safety, occupant..... 16
Safety defects, reporting
  Canada..... 17
  USA..... 16

Seat belt
reminder..... 20
Seat belts..... 18
Automatic locking retractor/Emergency locking retractor..... 34
buckling..... 18
guides..... 19
maintenance..... 20
pretensioners..... 18
unbuckling..... 18
use during pregnancy..... 19
Seats, front..... 92
Shiftlock
override..... 149
Side door mirrors..... 73
Side impact airbags..... 29
Side impact protection (SIPS) airbags..... 29
Sirius satellite radio..... 247
Ski hatch..... 115
Snow chains..... 185
Snow tires..... 185
Sound control, automatic..... 242
Sound settings, audio system..... 240
Spare tire..... 186
Stability system..... 152
Dynamic Stability Traction Control (DSTC)..... 152
Starting the engine..... 143
with keyless drive..... 145
Start inhibitor (immobilizer)..... 118, 143
STC, stability system..... 152
Steering wheel
adjusting..... 69
keypad..... 239
Storage compartments..... 108
Studded tires..... 185
Subwoofer..... 241
Supplemental restraint system..... 21

T

Tachometer..... 49
Temporary spare tire..... 186
Three-way catalytic converter..... 276
Tire inflation..... 175
Tire inflation pressure
Canadian models..... 178
US models..... 177
Tire Pressure Monitoring System (TPMS) 195
Tires..... 172
age..... 172
changing..... 188
changing from summer to winter..... 173
designations..... 179
glossary of terms..... 181
improving economy..... 172
inflation..... 175
inflation pressure, checking..... 176
inflation pressure table, Canadian models..... 178
inflation pressure table, US models.... 177
load ratings..... 176
rotation..... 173
snow..... 185
spare..... 186
speed ratings..... 176
storing..... 173
studded..... 185
tire pressure monitoring system..... 195
tire sealing system..... 190
tread wear indicator..... 174
uniform tire quality grading..... 184
winter driving..... 185
Tire sealing system..... 190

Towing a trailer..... 158
trailer hitch..... 160
Towing the vehicle..... 154
Trailer hitch - detachable..... 160
Trailer towing..... 158
Transmission
Geartronic..... 148
manual..... 146
shiftlock override..... 149
Tread wear indicator..... 174
Treble..... 240
Trip computer..... 63
Trips, long distance..... 138
Trunk
loading..... 113
opening from the inside..... 129
opening mechanically..... 129
Trunk divider (Power retractable hard top)..... 101
Turn signals..... 61
indicator lights..... 49

U

Uniform Tire Quality Grading..... 184

V

Valet locking..... 122
Vehicle dimensions..... 266
Vehicle Event Data..... 208
Vehicle loading..... 182
Vehicle maintenance
performed by the owner..... 210
Vehicle towing..... 154
Vehicle weights..... 267
VIN (Vehicle Identification Number)..... 265
Volvo On Call Roadside Assistance..... 277

W

Warning flashers, hazard..... 69
Warning symbol..... 51
Warranties..... 208
Washer fluid..... 216, 269
Washer fluid reservoir..... 213, 216
Water, driving through..... 136
Weights..... 267
Wheel nuts..... 187
Wheels..... 172
changing..... 188
storing..... 173
Wind blocker (power retractable hard top) (Power retractable hard top)..... 104
Windows
power..... 71
Windshield washer fluid reservoir..... 213
Windshield wiper blades..... 218
Windshield wipers..... 67
rains sensor..... 68
Winter tires..... 185
Wiper blades
replacing windshield wipers..... 218

Volvo. for life

VOLVO

Volvo Car Corporation TP 10892 (USA & Canada), AT 0920, Printed in Sweden, Göteborg 2009, Copyright © 2000-2009 Volvo Car Corporation