Owner's Identification

OWNER _____

_____

ADDRESS _____
STREET

_____ _____ _____
CITY STATE/PROVINCE/TERRITORY ZIP CODE/ POSTAL CODE

V. I. N. _____

DELIVERY DATE _____
(Date sold to original retail purchaser)

DEALER NAME _____ DEALER NO. _____

ADDRESS _____
STREET

_____ _____ _____
CITY STATE/PROVINCE/TERRITORY ZIP CODE/ POSTAL CODE

OWNER'S SIGNATURE _____

DEALER'S SIGNATURE _____

This owner's manual should be considered a permanent part of the vehicle and should remain with the vehicle when it is sold.

This owner's manual covers all models of the CR-V. You may find descriptions of equipment and features that are not on your particular vehicle.

Images throughout this owner's manual (including the front cover) represent features and equipment that are available on some, but not all, models. Your particular model may not have some of these features.

The information and specifications included in this publication were in effect at the time of approval for printing. Honda Motor Co., Ltd. reserves the right, however, to discontinue or change specifications or design at any time without notice and without incurring any obligation whatsoever.

POUR CLIENTS CANADIEN AVIS IMPORTANT: Si vous avez besoin d'un Manuel du Conducteur en français, veuillez demander à votre concessionnaire de commander le numéro de pièce 33SWAC40

Introduction

Congratulations! Your selection of a 2011 Honda CR-V was a wise investment. It will give you years of driving pleasure.

One of the best ways to enhance the enjoyment of your new vehicle is to read this manual. In it, you will learn how to operate its driving controls and convenience items. Afterwards, keep this owner's manual in your vehicle so you can refer to it at any time.

Several warranties protect your new vehicle. Read the warranty booklet thoroughly so you understand the coverages and are aware of your rights and responsibilities.

Maintaining your vehicle according to the Maintenance Minder™ shown in the instrument panel helps to keep your driving trouble-free while it preserves your investment. When your vehicle needs maintenance, keep in mind that your dealer's staff is specially trained in servicing the many systems unique to your vehicle. Your dealer is dedicated to your satisfaction and will be pleased to answer any questions and concerns.

As you read this manual, you will find information that is preceded by a NOTICE symbol. This information is intended to help you avoid damage to your vehicle, other property, or the environment.

Introduction

California Proposition 65 Warning

WARNING: This product contains or emits chemicals known to the State of California to cause cancer and birth defects or other reproductive harm.

Event Data Recorders

This vehicle is equipped with one or more devices commonly referred to as event data recorders. These devices record front seat belt use, front passenger seat occupancy, airbag deployment data, and the failure of any airbag system component. This data belongs to the vehicle owner and may not be accessed by anyone else except as legally required or with the permission of the vehicle owner.

Service Diagnostic Recorders

This vehicle is equipped with service-related devices that record information about powertrain performance. The data can be used to verify emissions law requirements and/or help technicians diagnose and solve service problems. It may also be combined with data from other sources for research purposes, but it remains confidential.

California Perchlorate Contamination Prevention Act

The airbags, seat belt tensioners, and CR type batteries in this vehicle may contain perchlorate materials — special handling may apply. See *www.dtsc.ca.gov/hazardouswaste/perchlorate/*

A Few Words About Safety

Your safety, and the safety of others, is very important. And operating this vehicle safely is an important responsibility.

To help you make informed decisions about safety, we have provided operating procedures and other information on labels and in this manual. This information alerts you to potential hazards that could hurt you or others.

Of course, it is not practical or possible to warn you about all the hazards associated with operating or maintaining your vehicle. You must use your own good judgement.

You will find this important safety information in a variety of forms, including:

- **Safety Labels** — on the vehicle.
- **Safety Messages** — preceded by a safety alert symbol ⚠ and one of three signal words: **DANGER**, **WARNING**, or **CAUTION**. These signal words mean:

⚠ DANGER	You WILL be KILLED or SERIOUSLY HURT if you don't follow instructions.
⚠ WARNING	You CAN be KILLED or SERIOUSLY HURT if you don't follow instructions.
⚠ CAUTION	You CAN be HURT if you don't follow instructions.

- **Safety Headings** — such as Important Safety Reminders or Important Safety Precautions.
- **Safety Section** — such as Driver and Passenger Safety.
- **Instructions** — how to use this vehicle correctly and safely.

This entire book is filled with important safety information — please read it carefully.

Important Handling Information

Your CR-V has higher ground clearance than a passenger vehicle designed for use only on pavement. Higher ground clearance has many advantages for off-highway driving. It allows you to travel over bumps, obstacles, and rough terrain. It also provides good visibility so you can anticipate problems earlier.

These advantages come at some cost. Because your vehicle is taller and rides higher off the ground, it has a high center of gravity. This means your vehicle can tip or roll over if you make abrupt turns. Utility vehicles have a significantly higher rollover rate than other types of vehicles. In a rollover crash, an unbelted person is significantly more likely to die than a person wearing a seat belt. As a reminder, make sure you and your passengers always wear seat belts.

For information on how to reduce the risk of rollover, read “Driving Guidelines” on page 312 of this manual and the *Off-Highway Driving Guidelines* section on page 336 . Failure to operate your vehicle correctly might result in loss of control, a crash, or rollover.

Contents

Your Vehicle at a Glance (main controls) 3

Driver and Passenger Safety (seat belts, SRS, and child protection) 5

Instruments and Controls (indicators, gauges, information display, dashboard, and steering column) 59

Features (climate control, audio, steering wheel, security and cruise control) 129

Before Driving (fuel, vehicle break-in, and cargo loading) 293

Driving (engine and transmission operation) 311

Maintenance (minder, fluid checking, minor services, and vehicle storage) 339

Taking Care of the Unexpected (flat tire, jump starting, overheating, and fuses) 381

Technical Information (vehicle specifications, tires, and emissions controls) 405

Warranty and Customer Relations (U.S. and Canada only) (warranty and contact information) 421

Authorized Manuals (U.S. only) (how to order) 425

Index I

Service Information Summary (fluid capacities and tire pressures) ..... last page

Overview of Contents

Contents
A convenient reference to the sections in this manual.

Your Vehicle at a Glance
A quick reference to the main controls in your vehicle.

Driver and Passenger Safety
Important information about the proper use and care of your vehicle's seat belts, an overview of the supplemental restraint system, and valuable information on how to protect children with child restraints.

Instruments and Controls
Explains the purpose of each instrument panel indicator and gauge, and how to use the controls on the dashboard and steering column.

Features
How to operate the heating and air conditioning system, the audio system, and other convenience features.

Before Driving
What gasoline to use, how to break-in your new vehicle, and how to load luggage and other cargo.

Driving
The proper way to start the engine, shift the transmission, and park; plus what you need to know if you're planning to tow a trailer.

Maintenance
The Maintenance Minder™ shows you when you need to take your vehicle to the dealer for maintenance service. There is also a list of things to check and instructions on how to check them.

Taking Care of the Unexpected
This section covers several problems motorists sometimes experience, and details how to handle them.

Technical Information
ID numbers, dimensions, capacities, and technical information.

Warranty and Customer Relations (U.S. and Canada only)
A summary of the warranties covering your new vehicle, and how to contact us for any reason. Refer to your warranty manual for detailed information.

Authorized Manuals (U.S. only)
How to order manuals and other technical literature.

Index

Service Information Summary
A summary of the information you need when you pull up to the fuel pump.

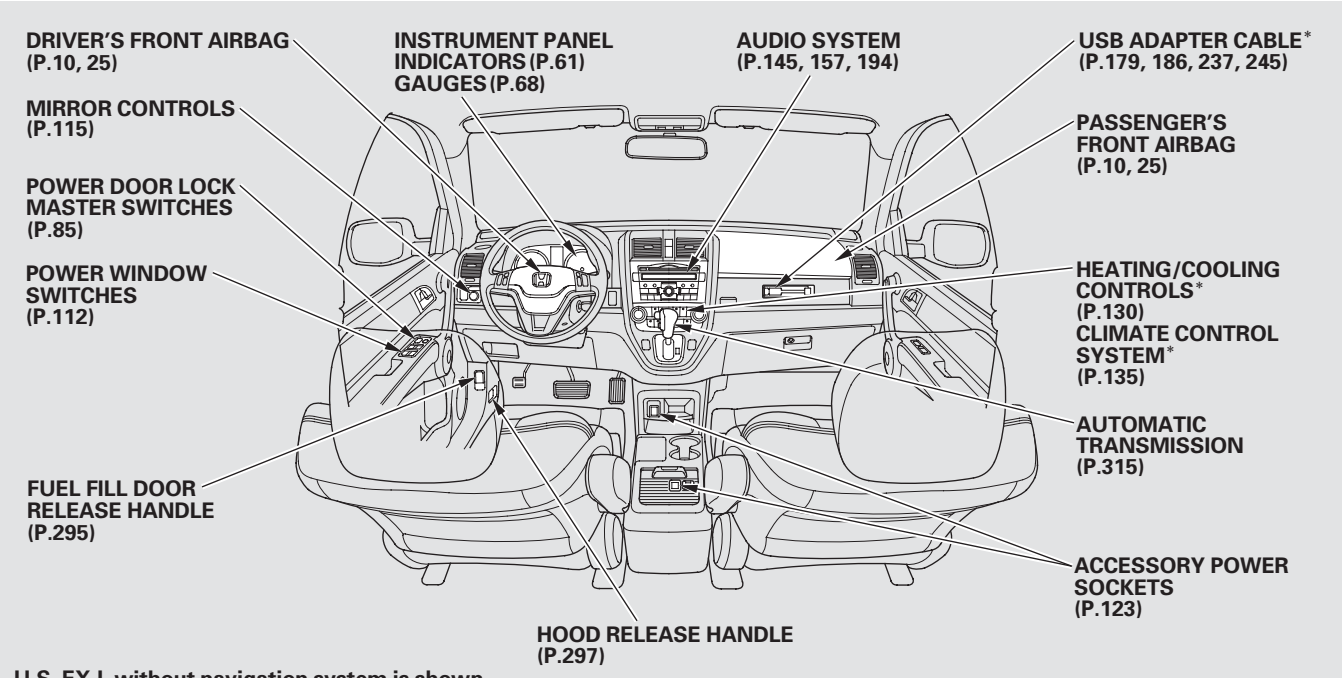

U.S. EX-L without navigation system is shown.

* : If equipped

Your Vehicle at a Glance

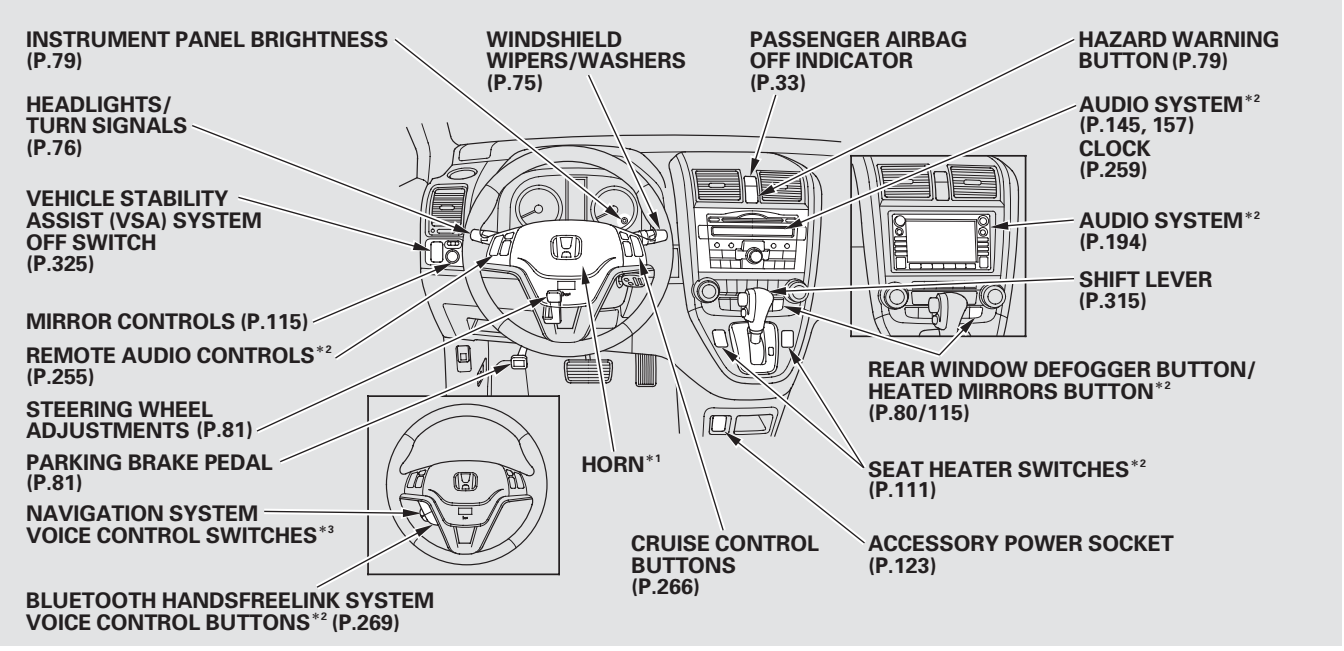

*1 : To use the horn, press the center pad of the steering wheel.
*2 : If equipped.
*3 : Refer to the navigation system manual.

Driver and Passenger Safety

This section gives you important information about how to protect yourself and your passengers. It shows you how to use seat belts. It explains how your airbags work. And it tells you how to properly restrain infants and children in your vehicle.

Important Safety Precautions 6
Your Vehicle's Safety Features..... 8
Protecting Adults and Teens..... 12
1. Close and Lock the Doors 12
2. Adjust the Front Seats 12
3. Adjust the Seat-Backs 13
4. Adjust the Head Restraints 14
5. Fasten and Position the Seat Belts 15
6. Maintain a Proper Sitting Position 16
Advice for Pregnant Women..... 17
Additional Safety Precautions.... 18
Additional Information About Your Seat Belts 19
Seat Belt System Components... 19
Lap/Shoulder Belt..... 20
Automatic Seat Belt Tensioners..... 21
Seat Belt Maintenance 22
Additional Information About Your Airbags 23
Airbag System Components..... 23
How Your Front Airbags Work..... 25
How Your Side Airbags Work.... 29
How Your Side Curtain Airbags Work..... 31
How the SRS Indicator Works... 32
How the Side Airbag Off Indicator Works..... 32
How the Passenger Airbag Off Indicator Works..... 33
Airbag Service..... 34
Additional Safety Precautions.... 34
Protecting Children — General Guidelines..... 35
All Children Must Be Restrained 35
All Children Should Sit in a Back Seat..... 36
The Passenger's Front Airbag Can Pose Serious Risks 36
If You Must Drive with Several Children 38
If a Child Requires Close Attention 38
Additional Safety Precautions.... 38
Protecting Infants and Small Children 40
Protecting Infants..... 40
Protecting Small Children 41
Selecting a Child Seat..... 42
Installing a Child Seat 43
With LATCH 44
With a Lap/Shoulder Belt 47
With a Tether..... 49
Protecting Larger Children 51
Checking Seat Belt Fit 51
Using a Booster Seat..... 52
When Can a Larger Child Sit in Front..... 53
Additional Safety Precautions.... 54
Carbon Monoxide Hazard 55
Safety Labels..... 56

Important Safety Precautions

You'll find many safety recommendations throughout this section, and throughout this manual. The following recommendations are the ones we consider to be the most important.

Always Wear Your Seat Belt
A seat belt is your best protection in all types of collisions. Airbags are designed to supplement seat belts, not replace them. So even though your vehicle is equipped with airbags, make sure you and your passengers always wear your seat belts, and wear them properly (see page 15).

Restrain All Children
Children age 12 and under should ride properly restrained in a back seat, not the front seat. Infants and small children should be restrained in a child seat. Larger children should use a booster seat and a lap/shoulder belt until they can use the belt properly without a booster seat (see pages 35 — 54).

Be Aware of Airbag Hazards
While airbags can save lives, they can cause serious or fatal injuries to occupants who sit too close to them, or are not properly restrained. Infants, young children, and short adults are at the greatest risk. Be sure to follow all instructions and warnings in this manual.

Don't Drink and Drive
Alcohol and driving don't mix. Even one drink can reduce your ability to respond to changing conditions, and your reaction time gets worse with every additional drink. So don't drink and drive, and don't let your friends drink and drive, either.

Pay Appropriate Attention to the Task of Driving Safely
Engaging in mobile phone conversation or other activities that keep you from paying close attention to the road, other vehicles and pedestrians could lead to a crash. Remember, situations can change quickly, and only you can decide when it is safe to divert attention away from driving.

Control Your Speed
Excessive speed is a major factor in crash injuries and deaths. Generally, the higher the speed, the greater the risk, but serious injuries can also occur at lower speeds. Never drive faster than is safe for current conditions, regardless of the maximum speed posted.

Keep Your Vehicle in Safe Condition
Having a tire blowout or a mechanical failure can be extremely hazardous. To reduce the possibility of such problems, check your tire pressures and condition frequently, and perform all regularly scheduled maintenance (see page 341).

Your Vehicle's Safety Features

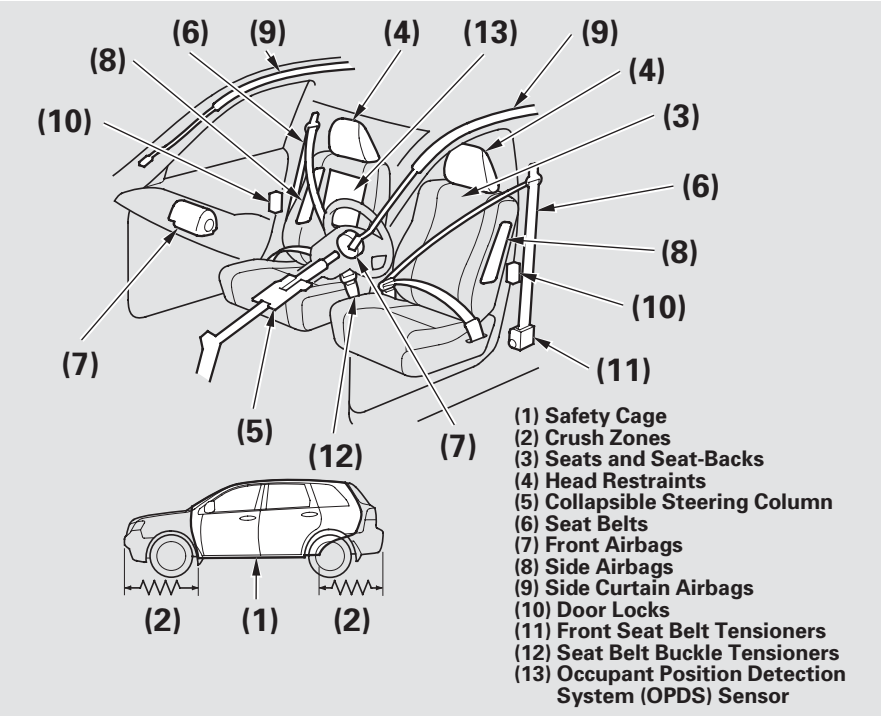

Your vehicle is equipped with many features that work together to protect you and your passengers during a crash.

Some features do not require any action on your part. These include a strong steel framework that forms a safety cage around the passenger compartment, front and rear crush zones, a collapsible steering column, and tensioners that tighten the front seat belts in a crash.

However, you and your passengers can't take full advantage of these features unless you remain sitting in the correct position and ***always wear your seat belts***. In fact, some safety features can contribute to injuries if they are not used properly.

The following pages explain how you can take an active role in protecting yourself and your passengers.

Seat Belts

Your vehicle is equipped with seat belts in all seating positions.

Your seat belt system also includes an indicator on the instrument panel and a beeper to remind you and your passengers to fasten your seat belts.

Why Wear Seat Belts

Seat belts are the single most effective safety device for adults and larger children. (Infants and smaller children must be properly restrained in child seats.)

Not wearing a seat belt properly increases the chance of serious injury or death in a crash, even though your vehicle has airbags.

In addition, most states and all Canadian provinces and territories require you to wear seat belts.

⚠ WARNING

Not wearing a seat belt properly increases the chance of serious injury or death in a crash, even though your vehicle has airbags.

Be sure you and your passengers always wear seat belts and wear them properly.

When properly worn, seat belts:

- Keep you connected to the vehicle so you can take advantage of the vehicle's built-in safety features.
- Help protect you in almost every type of crash, including:
  - frontal impacts
  - side impacts
  - rear impacts
  - rollovers
- Help keep you from being thrown against the inside of the vehicle and against other occupants.
- Keep you from being thrown out of the vehicle.
- Help keep you in a good position should the airbags ever deploy. A good position reduces the risk of injury from an inflating airbag and allows you to get the best advantage from the airbag.

Of course, seat belts cannot completely protect you in every crash. But in most cases, seat belts can reduce your risk of serious injury.

What You Should Do:

Always wear your seat belt, and make sure you wear it properly.

Your Vehicle's Safety Features

Airbags

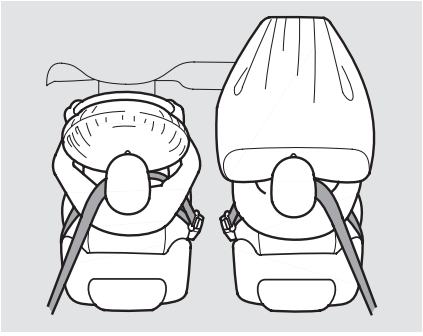

Your vehicle has a supplemental restraint system (SRS) with front airbags to help protect the heads and chests of the driver and a front seat passenger during a moderate to severe frontal collision (see page 25 for more information on how your front airbags work).

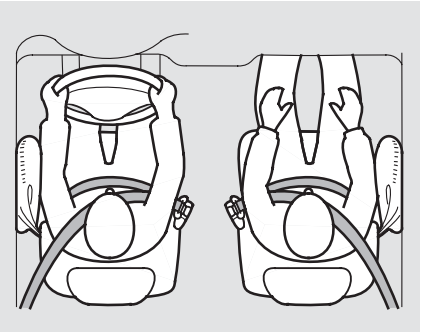

Your vehicle also has side airbags to help protect the upper torso of the driver or a front seat passenger during a moderate to severe side impact (see page 29 for more information on how your side airbags work).

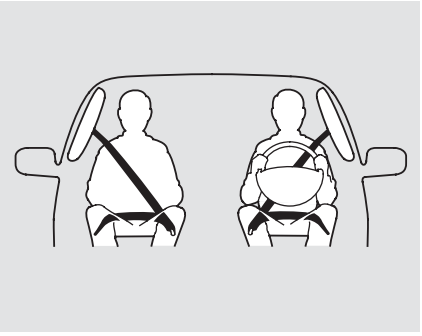

In addition, your vehicle has side curtain airbags to help protect the heads of the driver, front passenger, and passengers in the outer rear seating positions during a moderate to severe side impact or rollover (see page 31 for more information on how your side curtain airbags work).

The most important things you need to know about your airbags are:

- ***Airbags do not replace seat belts.*** They are designed to supplement the seat belts.
- ***Airbags offer no protection in rear collisions, or minor frontal or side collisions.***
- ***Airbags can pose serious hazards.*** To do their job, airbags must inflate with tremendous force. So while airbags help save lives, they can cause minor injuries or more serious or even fatal injuries if occupants are not properly restrained or sitting properly.

What you should do: Always wear your seat belt properly, and sit upright and as far back from the steering wheel as possible while allowing full control of the vehicle. A front passenger should move their seat as far back from the dashboard as possible.

The rest of this section gives more detailed information about how you can maximize your safety.

Remember, however, that no safety system can prevent all injuries or deaths that can occur in a severe crash, even when seat belts are properly worn and the airbags deploy.

Protecting Adults and Teens

Introduction
The following pages provide instructions on how to properly protect the driver, adult passengers, and teenage children who are large enough and mature enough to drive or ride in the front.

See pages 35 — 54 for important guidelines on how to properly protect infants, small children, and larger children who ride in your vehicle.

1.Close and Lock the Doors
After everyone has entered the vehicle, be sure the doors and the tailgate are closed and locked.

Your vehicle has a door and tailgate open indicator on the instrument panel to indicate when a specific door or the tailgate is not tightly closed.

Locking the doors reduces the chance of someone being thrown out of the vehicle during a crash, and it helps prevent passengers from accidentally opening a door and falling out.

Locking the doors also helps prevent an outsider from unexpectedly opening a door when you come to a stop.

See page 85 for how to lock the doors, and page 65 for how the door and tailgate open indicator works.

Your vehicle has the auto door locking/unlocking feature. For more information, see page 86 .

2.Adjust the Front Seats

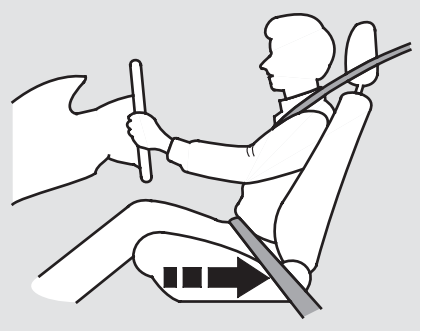

Adjust the driver's seat as far to the rear as possible while allowing you to maintain full control of the vehicle. Have a front passenger adjust their seat as far to the rear as possible.

If you sit too close to the steering wheel or dashboard, you can be seriously injured by an inflating front airbag, or by striking the steering wheel or dashboard.

The National Highway Traffic Safety Administration and Transport Canada recommend that drivers allow at least 10 inches (25 cm) between the center of the steering wheel and the chest. In addition to adjusting the seat, you can adjust the steering wheel up and down, and in and out (see page 81).

If you cannot get far enough away from the steering wheel and still reach the controls, we recommend that you investigate whether some type of adaptive equipment may help.

⚠ WARNING

Sitting too close to a front airbag can result in serious injury or death if the front airbags inflate.

Always sit as far back from the front airbags as possible.

On vehicles with manual adjustable seats
Once your seat is adjusted correctly, rock it back and forth to make sure the seat is locked in position.

See page 97 for how to adjust a front seat (power adjustment) and page 98 for a manual adjustment.

3.Adjust the Seat-Backs

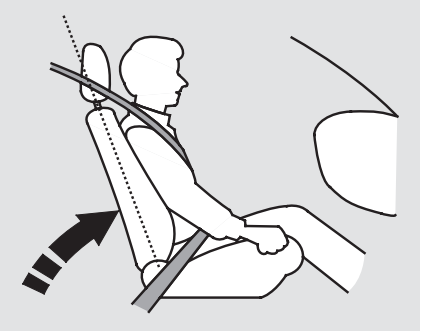

Adjust the driver's seat-back to a comfortable, upright position, leaving ample space between your chest and the airbag cover in the center of the steering wheel.

Passengers with adjustable seat-backs should also adjust their seat-back to a comfortable, upright position.

CONTINUED

⚠ WARNING

Reclining the seat-back too far can result in serious injury or death in a crash.

Adjust the seat-back to an upright position, and sit well back in the seat.

Reclining a seat-back so that the shoulder part of the belt no longer rests against the occupant's chest reduces the protective capability of the belt. It also increases the chance of sliding under the belt in a crash and being seriously injured. The farther a seat-back is reclined, the greater the risk of injury.

See page 98 for how to adjust the manual adjustable seat-back, and page 97 for the power adjustable seat-back.

4. Adjust the Head Restraints

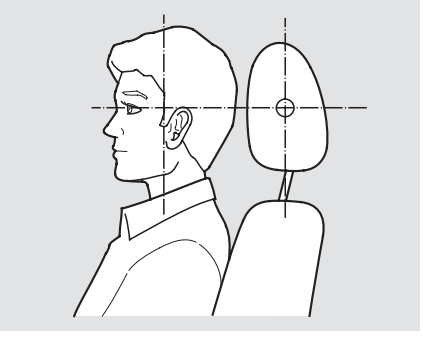

Adjust the driver's head restraint so the center of the back of your head rests against the center of the restraint.

Have passengers adjust their head restraints properly as well. Taller persons should adjust their restraint as high as possible.

⚠ WARNING

Improperly positioning head restraints reduces their effectiveness and you can be seriously injured in a crash.

Make sure head restraints are in place and positioned properly before driving.

Properly adjusted head restraints will help protect occupants from whiplash and other crash injuries.

See page 101 for how to adjust the head restraints and how the driver's and front passenger's active head restraints work.

5. Fasten and Position the Seat Belts

Insert the latch plate into the buckle, then tug on the belt to make sure the belt is securely latched. Check that the belt is not twisted, because a twisted belt can cause serious injuries in a crash.

The seat belt in the center position of the back seat can be unlatched and retracted to allow the back seat to be folded up or down. This seat belt should be latched whenever the seat-back is in an upright position. See page 109 for how to unlatch and relatch the seat belt.

Position the lap part of the belt as low as possible across your hips, then pull up on the shoulder part of the belt so the lap part fits snugly. This lets your strong pelvic bones take the force of a crash and reduces the chance of internal injuries.

If necessary, pull up on the belt again to remove any slack, then check that the belt rests across the center of your chest and over your shoulder.

This spreads the forces of a crash over the strongest bones in your upper body.

⚠ WARNING

Improperly positioning the seat belts can cause serious injury or death in a crash.

Make sure all seat belts are properly positioned before driving.

If the seat belt touches or crosses your neck, or if it crosses your arm instead of your shoulder, you need to adjust the seat belt anchor height.

CONTINUED

Protecting Adults and Teens

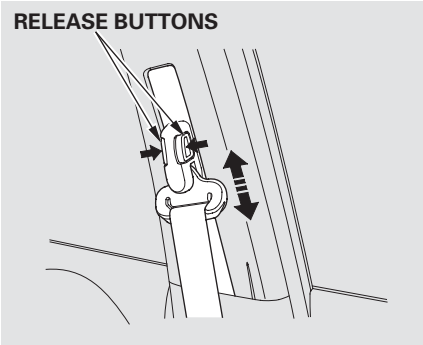

The front seats have adjustable seat belt anchors. To adjust the height of an anchor, press and hold the release buttons, and slide the anchor up or down as needed (it has four positions).

Never place the shoulder portion of a lap/shoulder belt under your arm or behind your back. This could cause very serious injuries in a crash.

If a seat belt does not seem to work properly, it may not protect the occupant in a crash.

No one should sit in a seat with an inoperative seat belt. Using a seat belt that is not working properly can result in serious injury or death. Have your dealer check the belt as soon as possible.

See page 19 for additional information about your seat belts and how to take care of them.

6. Maintain a Proper Sitting Position

After all occupants have adjusted their seats and head restraints, and put on their seat belts, it is very important that they continue to sit upright, well back in their seats, with their feet on the floor, until the vehicle is safely parked and the engine is off.

Sitting improperly can increase the chance of injury during a crash. For example, if an occupant slouches, lies down, turns sideways, sits forward, leans forward or sideways, or puts one or both feet up, the chance of injury during a crash is greatly increased.

In addition, an occupant who is out of position in the front seat can be seriously or fatally injured in a crash by striking interior parts of the vehicle or being struck by an inflating front airbag.

⚠ WARNING

Sitting improperly or out of position can result in serious injury or death in a crash.

Always sit upright, well back in the seat, with your feet on the floor.

Advice for Pregnant Women

If you are pregnant, the best way to protect yourself and your unborn child when driving or riding in a vehicle is to always wear a seat belt, and keep the lap part of the belt as low as possible across the hips.

When driving, remember to sit upright and adjust the seat as far back as possible while allowing full control of the vehicle. When riding as a front passenger, adjust the seat as far back as possible.

This will reduce the risk of injuries to both you and your unborn child that can be caused by a crash or an inflating front airbag.

Each time you have a checkup, ask your doctor if it's okay for you to drive.

Additional Safety Precautions

- ***Never let passengers ride in the cargo area or on top of a folded-down back seat.*** If they do, they could be very seriously injured in a crash.

- ***Passengers should not stand up or change seats while the vehicle is moving.*** A passenger who is not wearing a seat belt during a crash or emergency stop can be thrown against the inside of the vehicle, against other occupants, or out of the vehicle.

- ***Two people should never use the same seat belt.*** If they do, they could be very seriously injured in a crash.

- ***Do not put any accessories on seat belts.*** Devices intended to improve occupant comfort or reposition the shoulder part of a seat belt can reduce the protective capability of the belt and increase the chance of serious injury in a crash.

- ***Do not place hard or sharp objects between yourself and a front airbag.*** Carrying hard or sharp objects on your lap, or driving with a pipe or other sharp object in your mouth, can result in injuries if your front airbag inflates.

- ***Keep your hands and arms away from the airbag covers.*** If your hands or arms are close to an airbag cover, they could be injured if the airbag inflates.

- ***Do not attach or place objects on the front airbag covers.*** Objects on the covers marked “SRS AIRBAG” could interfere with the proper operation of the airbags or be propelled inside the vehicle and hurt someone if the airbags inflate.

- ***Do not attach hard objects on or near a door.*** If a side airbag or a side curtain airbag inflates, a cup holder or other hard object attached on or near the door could be propelled inside the vehicle and hurt someone.

- ***Do not cover or replace front seat-back covers without consulting your dealer.*** Improperly replacing or covering front seat-back covers can prevent your side airbags from inflating during a side impact.

Seat Belt System Components
Your seat belt system includes lap/shoulder belts in all seating positions. The front seat belts are also equipped with automatic seat belt tensioners.

The seat belt system includes an indicator on the instrument panel and a beeper to remind you and your passengers to fasten your seat belts.

This system monitors the front seat belts. If you turn the ignition switch to the ON (II) position before your seat belt is fastened, the beeper will sound and the indicator will flash. If your seat belt is not fastened before the beeper stops, the indicator will stop flashing but remain on.

If a front passenger does not fasten their seat belt, the indicator will come on about 6 seconds after the ignition switch is turned to the ON (II) position.

If either the driver or a front passenger does not fasten their seat belt while driving, the beeper will sound and the indicator will flash again at regular intervals.

When no one is sitting in the front passenger's seat, or a child or small adult is riding there, the indicator should not come on and the beeper should not sound.

If the indicator comes on or the beeper sounds when the driver's seat belt is latched and there is no front seat passenger and no items on the front seat, something may be interfering with the monitoring system. Look for and remove:

- Any items under the front passenger's seat.
- Any object(s) hanging on the seat or in the seat-back pocket.
- Any object(s), such as a folded-down back seat, that are touching the rear of the seat-back.

If no obstructions are found, have your vehicle checked by a dealer.

Additional Information About Your Seat Belts

Lap/Shoulder Belt
The lap/shoulder belt goes over your shoulder, across your chest, and across your hips.

To fasten the belt, insert the latch plate into the buckle, then tug on the belt to make sure the buckle is latched (see page 15 for how to properly position the belt).

To unlock the belt, press the red PRESS button on the buckle. Guide the belt across your body so that it retracts completely. After exiting the vehicle, be sure the belt is out of the way and will not get closed in the door.

All seat belts have an emergency locking retractor. In normal driving, the retractor lets you move freely in your seat while it keeps some tension on the belt. During a collision or sudden stop, the retractor automatically locks the belt to help restrain your body.

The seat belts in all positions except the driver's have a lockable retractor that must be activated to secure a child seat (see page 47).

If the shoulder part of the belt is pulled all the way out, the lockable retractor will activate. The belt will retract, but it will not allow the passenger to move freely.

To deactivate the lockable retractor, unlatch the buckle and let the seat belt fully retract. To refasten the seat belt, pull it out only as far as needed.

The lap/shoulder belt in the center seating position on the rear seat is equipped with a detachable seat belt that has two parts: a small latch plate and an anchor buckle.

The detachable seat belt should normally be latched whenever the seat-backs are in an upright position. For more information about the detachable seat belt, see page 109 .

Additional Information About Your Seat Belts

⚠ WARNING

Using the seat belt with the detachable anchor unlatched increases the chance of serious injury or death in a crash.

Before using the seat belt, make sure the detachable anchor is correctly latched.

Automatic Seat Belt Tensioners

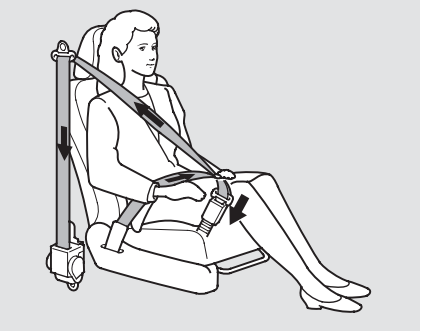

For added protection, the front seat belts are equipped with automatic seat belt tensioners. When activated, the tensioners immediately tighten the belts to help hold the driver and a front passenger in position.

The tensioners can be activated during a collision in which the front airbags *do not deploy*. In this case, the airbags would not be needed, but the additional restraint could be helpful.

If the tensioner is activated, the SRS indicator comes on and the tensioner must be replaced.

Additional Information About Your Seat Belts

Seat Belt Maintenance
For safety, you should check the condition of your seat belts regularly.

Pull each belt out fully, and look for frays, cuts, burns, and wear. Check that the latches work smoothly and the belts retract easily. If a belt does not retract easily, cleaning the belt may correct the problem (see page 365). Any belt that is not in good condition or working properly will not provide good protection and should be replaced as soon as possible.

Honda provides a limited warranty on seat belts. See your *Honda Warranty Information* booklet for details.

If a seat belt is worn during a crash, it must be replaced by your dealer. A belt that has been worn during a crash may not provide the same level of protection in a subsequent crash.

The dealer should also inspect the anchors for damage and replace them if needed. If the automatic seat belt tensioners activate during a crash, they must be replaced.

⚠ WARNING

Not checking or maintaining seat belts can result in serious injury or death if the seat belts do not work properly when needed.

Check your seat belts regularly and have any problem corrected as soon as possible.

Airbag System Components

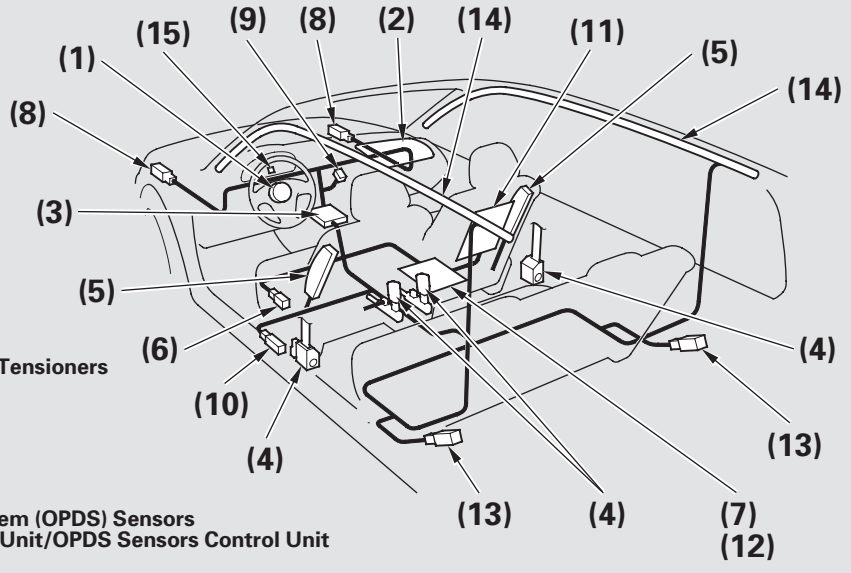

(1) Driver's Front Airbag
(2) Passenger's Front Airbag
(3) Control Unit/Rollover Sensor
(4) Front Seat Belt Tensioners/Buckle Tensioners
(5) Side Airbags
(6) Driver's Seat Position Sensor
(7) Front Passenger's Weight Sensors
(8) Front Impact Sensors
(9) Passenger Airbag Off Indicator
(10) Side Impact Sensors (First)
(11) Occupant Position Detection System (OPDS) Sensors
(12) Front Passenger's Weight Sensor Unit/OPDS Sensors Control Unit
(13) Side Impact Sensors (Second)
(14) Side Curtain Airbags
(15) Supplemental Restraint System (SRS) Indicator

CONTINUED

Additional Information About Your Airbags

Your airbag system includes:

- Two SRS (supplemental restraint system) front airbags. The driver's airbag is stored in the center of the steering wheel; the front passenger's airbag is stored in the dashboard. Both are marked "SRS AIRBAG" (see page 25).
- Two side airbags, one for the driver and one for a front passenger. The airbags are stored in the outer edges of the seat-backs. Both are marked "SIDE AIRBAG" (see page 29).
- Two side curtain airbags, one for each side of the vehicle. The airbags are stored in the ceiling, above the side windows. The front and rear pillars are marked "SIDE CURTAIN AIRBAG" (see page 31).
- Automatic front seat belt tensioners (see page 21).
- Sensors that can detect a moderate to severe front impact, side impact, or if your vehicle is about to rollover.
- Sensors that can detect whether a child is in the passenger's side airbag path and signal the control unit to turn the airbag off (see page 30).
- A driver's seat position sensor that monitors the distance of the seat from the front airbag. If the seat is too far forward, the airbag will inflate with less force (see page 28).
- Weight sensors that monitor the weight on the front passenger's seat. If the weight is about 65 lbs (29 kg) or less (the weight of an infant or small child), the passenger's front airbag will be turned off (see page 28).
- Sensors that can detect whether the driver's seat belt and the front passenger's seat belt are latched or unlatched (see page 19).
- A sophisticated electronic system that continually monitors and records information about the sensors, the control unit, the airbag activators, the seat belt tensioners, and driver and front passenger seat belt use when the ignition switch is in the ON (II) position.

- A rollover sensor that can detect if your vehicle is about to roll over and signal the control unit to deploy both side curtain airbags (see page 31).
- An indicator on the instrument panel that alerts you to a possible problem with your airbag system components (see page 32).
- An indicator on the instrument panel that alerts you that the passenger's side airbag has been turned off (see page 32).
- An indicator on the dashboard that alerts you that the passenger's front airbag has been turned off (see page 33).
- Emergency backup power in case your vehicle's electrical system is disconnected in a crash.

How Your Front Airbags Work

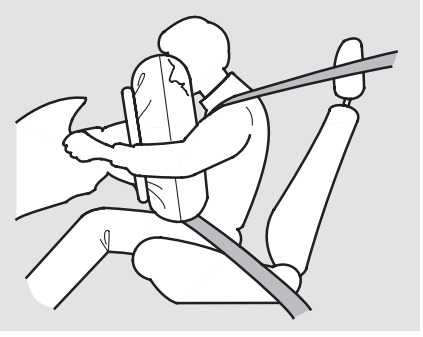

If you ever have a moderate to severe frontal collision, sensors will detect the vehicle's rapid deceleration.

If the rate of deceleration is high enough, the control unit will inflate the driver's and front passenger's airbags, at the time and with the force needed.

During a frontal crash, your seat belt restrains your lower body and torso, and the front airbag helps protect your head and chest.

Although both airbags normally inflate within split second of each other, it is possible for only one airbag to deploy.

This can happen if the severity of a collision is at the margin, or threshold, that determines whether or not the airbags will deploy. In such cases, the seat belt will provide sufficient protection, and the supplemental protection offered by the airbag would be minimal.

CONTINUED

Additional Information About Your Airbags

Only the driver's airbag can deploy if there is no passenger in the front seat, or if the advanced airbag system has turned the passenger's airbag off (see page 28).

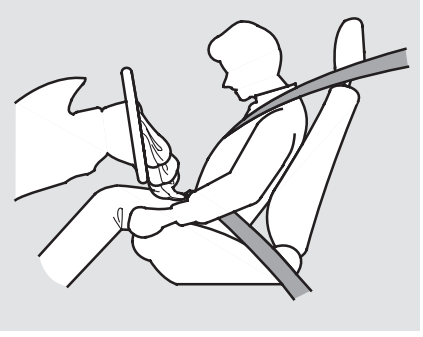

After inflating, the front airbags immediately deflate, so they won't interfere with the driver's visibility, or the ability to steer or operate other controls.

The total time for inflation and deflation is one-tenth of a second, so fast that most occupants are not aware that the airbags deployed until they see them lying in their laps.

After a crash, you may see what looks like smoke. This is actually powder from the airbag's surface. Although the powder is not harmful, people with respiratory problems may experience some temporary discomfort. If this occurs, get out of the vehicle as soon as it is safe to do so.

Dual-Stage, Multiple-Threshold Front Airbags (SRS)
Your vehicle is equipped with dual-stage, multiple-threshold front airbags (SRS). During a frontal crash severe enough to cause one or both front airbags to deploy, the airbags can inflate at different rates, depending on the severity of the crash, whether or not the seat belts are latched, and/or other factors. Front airbags are designed to supplement the seat belts to help reduce the likelihood of head and chest injuries in frontal crashes.

Advanced Airbags
Your front airbags are also advanced airbags. The main purpose of this feature is to help prevent airbag-caused injuries to short drivers and children or small-statured adults who ride in front.

For both advanced airbags to work properly:

- Occupants must sit upright and wear their seat belts properly.
- Do not spill any liquids on or under the seats, cover the sensors, or put any objects or metal items under the front seats.
- Objects placed or pushed under the front passenger's seat may cause the sensor to malfunction, increasing the risk of injury in a crash.

Failure to follow these instructions could damage the sensors or prevent them from working properly.

CONTINUED

Additional Information About Your Airbags

DRIVER'S SEAT POSITION SENSOR

The driver's advanced front airbag system includes a seat position sensor under the seat. If the seat is too far forward, the airbag will inflate with less force, regardless of the severity of the impact.

If there is a problem with the sensor, the SRS indicator will come on, and the airbag will inflate in the normal manner regardless of the driver's seating position.

PASSENGER'S SEAT WEIGHT SENSORS

The passenger's advanced front airbag system has weight sensors under the seat. Although Honda does not encourage carrying an infant or small child in front, if the sensors detect the weight of an infant or small child (up to about 65 lbs or 29 kg), the system will automatically turn the passenger's front airbag off.

Be aware that objects placed on the passenger's seat can also cause the airbag to be turned off.

When the passenger airbag gets turned off by the weight sensors, a "passenger airbag off" indicator in the center of the dashboard comes on (see page 33).

If the weight sensors detect there is no passenger in the front seat, the airbag is automatically turned off. However, the passenger airbag off indicator in this situation will not come on.

To ensure that the passenger's advanced front airbag system will work properly, ***do not do anything that would increase or decrease the weight on the front passenger's seat.*** This includes:

- A rear passenger pushing or pulling on the back of the front passenger's seat.
- Moving the front seat forcibly back against cargo on the seat or floor behind it.
- Hanging heavy items on the front passenger seat, or placing heavy items in the seat-back pocket.
- Moving the front seat or seat-back forcibly back against the folded rear seat.
- Back seat passengers should not wedge objects or intentionally force their feet under the front passenger seat.

How Your Side Airbags Work

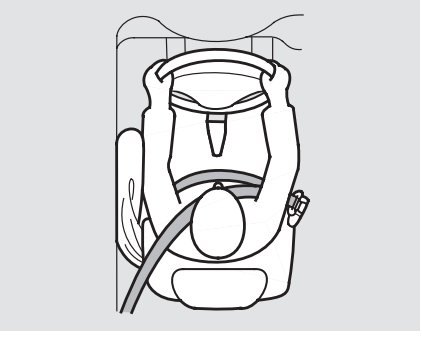

If you ever have a moderate to severe side impact, sensors will detect rapid acceleration and signal the control unit to instantly inflate either the driver's or the passenger's side airbag.

CONTINUED

Additional Information About Your Airbags

Only one airbag will deploy during a side impact. If the impact is on the passenger's side, the passenger's side airbag will deploy even if there is no passenger.

To get the best protection from the side airbags, front seat occupants should wear their seat belts and sit upright and well back in their seats.

Side Airbag Cutoff System

Your vehicle has a side airbag cutoff system designed primarily to protect a child riding in the front passenger's seat.

Although Honda does not encourage children to ride in front, if the position sensors detect a child has leaned into the side airbag's deployment path, the airbag will shut off.

The side airbag may also shut off if a short adult leans sideways, or a larger adult slouches and leans sideways into the airbag's deployment path.

Objects placed on the front passenger seat can also cause the side airbag to be shut off.

If the side airbag off indicator comes on (see page 32), have the passenger sit upright. Once the passenger is out of the airbag's deployment path, the system will turn the airbag back on, and the indicator will go out.

There will be some delay between the moment the passenger moves into or out of the airbag deployment path and when the indicator comes on or goes off.

A front seat passenger should not use a cushion or another object as a backrest. It may prevent the cutoff system from working properly.

How Your Side Curtain Airbags Work

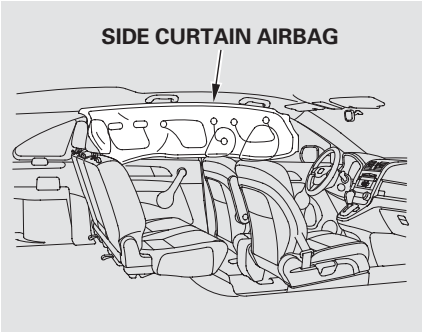

In a Side Impact
In a moderate to severe side impact, sensors will detect rapid acceleration and signal the control unit to instantly inflate the side curtain airbag.

If the impact is on the passenger's side, the passenger's side curtain airbag will inflate even if there are no occupants on that side of the vehicle.

In a Rollover
If the rollover sensor detects your vehicle is about to roll over, it signals the control unit, which immediately deploys both side curtain airbags.

The airbag on the passenger's side will deploy, even if there are no passengers on that side of the vehicle.

To get the best protection from the side curtain airbags, occupants should wear their seat belts and sit upright and well back in their seats.

Additional Information About Your Airbags

How the SRS Indicator Works

The SRS indicator alerts you to a potential problem with your airbag system components.

When you turn the ignition switch to the ON (II) position, this indicator comes on briefly then goes off. This tells you the system is working properly.

If the indicator comes on at any other time, or does not come on at all, you should have the system checked by your dealer. For example:

- If the SRS indicator does not come on after you turn the ignition switch to the ON (II) position.
- If the indicator stays on after the engine starts.
- If the indicator comes on or flashes on and off while you drive.

If you see any of these indications, the airbag system components may not work properly when you need them.

⚠ WARNING

Ignoring the SRS indicator can result in serious injury or death if the airbag systems or tensioners do not work properly.

Have your vehicle checked by a dealer as soon as possible if the SRS indicator alerts you to a possible problem.

How the Side Airbag Off Indicator Works

This indicator alerts you that the passenger's side airbag has been automatically shut off. It does ***not*** mean there is a problem with your side airbags.

When you turn the ignition switch to the ON (II) position, the indicator should come on briefly and then go off (see page 63). If it doesn't come on, stays on, or comes on while driving without a passenger in the front seat, have the system checked.

How the Passenger Airbag Off Indicator Works

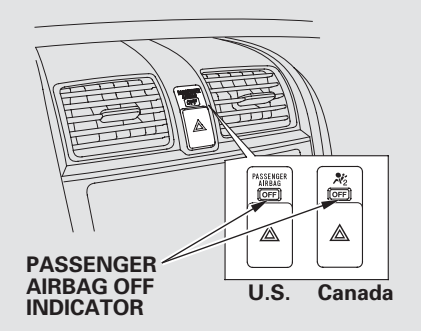

This indicator alerts you that the passenger's front airbag has been shut off because weight sensors detect about 65 lbs (29 kg) or less (the weight of an infant or small child) on the front passenger's seat. It does ***not mean*** there is a problem with the airbag.

Be aware that objects placed on the front seat can cause the indicator to come on.

If no weight is detected on the front seat, the airbag will be automatically shut off. However, the indicator will not come on.

The passenger airbag off indicator may come on and off repeatedly if the total weight on the seat is near the airbag cutoff threshold.

If an adult or teenage passenger is riding in front, move the seat as far to the rear as possible, and have the passenger sit upright and wear the seat belt properly.

If the indicator comes on with no front seat passenger and no objects on the seat, or with an adult riding there, something may be interfering with the weight sensors. Look for and remove:

- Any items under the front passenger's seat.
- Any object(s) hanging on the seat or in the seat-back pocket.
- Any object(s), such as a folded-down back seat, that are touching the rear of the seat-back.

If no obstructions are found, have your vehicle checked by a dealer as soon as possible.

Additional Information About Your Airbags

Airbag Service

Your airbag systems are virtually maintenance free, and there are no parts you can safely service. However, you must have your vehicle serviced if:

- ***An airbag ever inflates.*** Any airbag that has deployed must be replaced along with the control unit and other related parts. Any seat belt tensioner that activates must also be replaced.

  Do not try to remove or replace any airbag by yourself. This must be done by an authorized dealer or a knowledgeable body shop.

- ***The SRS indicator alerts you to a problem.*** Take your vehicle to an authorized dealer as soon as possible. If you ignore this indication, your airbags may not operate properly.

- ***If your vehicle has a moderate to severe impact.*** Even if your airbags do not inflate, your dealer should inspect the driver's seat position sensor, the front passenger's weight sensors, the front seat belt tensioners, and all seat belts and their anchors worn during a crash to make sure they are operating properly.

Additional Safety Precautions

- ***Do not attempt to deactivate your airbags.*** Together, airbags and seat belts provide the best protection.

- ***Do not tamper with airbag components or wiring for any reason.*** Tampering could cause the airbags to deploy, possibly causing very serious injury.

- ***Do not expose the front passenger's seat-back to liquid.*** If water or another liquid soaks into a seat-back, it can prevent the side airbag cutoff system from working properly.

- ***Do not remove or modify a front seat without consulting your dealer.*** This could make the driver's seat position sensor or the front passenger's weight sensors ineffective. If it is necessary to remove or modify a front seat to accommodate a person with disabilities, first contact Honda Automobile Customer Service at (800) 999-1009 in the US, or Honda Customer Relations at 1-888-9-HONDA-9 in Canada.

Protecting Children — General Guidelines

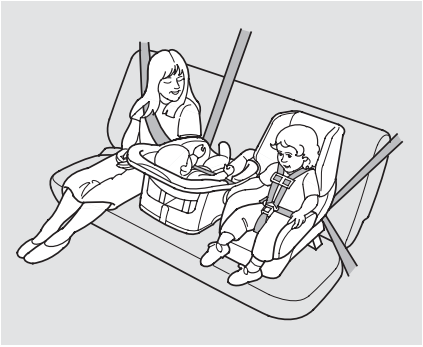

Children depend on adults to protect them. However, despite their best intentions, many adults do not know how to *properly* protect child passengers.

If you have children, or ever need to drive with a child in your vehicle, be sure to read this section. It begins with important general guidelines, then presents special information for infants, small children, and larger children.

All Children Must Be Restrained
Each year, many children are injured or killed in vehicle crashes because they are either unrestrained or not properly restrained. In fact, traffic collisions are the number one cause of death of children age 12 and under.

To reduce the number of child deaths and injuries, every state, Canadian province and territory requires that infants and children be properly restrained when they ride in a vehicle.

Infants and small children must be restrained in an approved child seat that is properly secured to the vehicle (see pages 40 — 50).

⚠WARNING

Children who are unrestrained or improperly restrained can be seriously injured or killed in a crash.

Any child too small for a seat belt should be properly restrained in a child seat. A larger child should be properly restrained with a seat belt and use a booster seat if necessary.

Larger children must be restrained with a lap/shoulder belt and ride on a booster seat until the seat belt fits them properly (see pages 51 — 54).

Protecting Children – General Guidelines

All Children Should Sit in a Back Seat
According to crash statistics, children of all ages and sizes are safer when they are restrained in a back seat.

The National Highway Traffic Safety Administration and Transport Canada recommend that all children aged 12 and under be properly restrained in a back seat. Some states have laws restricting where children may ride.

Children who ride in back are less likely to be injured by striking interior vehicle parts during a collision or hard braking. Also, children cannot be injured by an inflating front airbag when they ride in the back.

The Passenger's Front Airbag Can Pose Serious Risks
Front airbags have been designed to help protect adults in a moderate to severe frontal collision. To do this, the passenger's front airbag is quite large, and it can inflate with enough force to cause very serious injuries.

Even though your vehicle has an advanced front airbag system that automatically turns the passenger's front airbag off under certain circumstances (see page 33), please follow these guidelines:

Infants
Never put a rear-facing child seat in the front seat of a vehicle equipped with a passenger's front airbag. If the airbag inflates, it can hit the back of the child seat with enough force to kill or very seriously injure an infant.

Small Children
Placing a forward-facing child seat in the front seat of a vehicle equipped with a passenger's front airbag can be hazardous. If the vehicle seat is too far forward, or the child's head is thrown forward during a collision, an inflating front airbag can strike the child with enough force to kill or very seriously injure a small child.

Larger Children
Children who have outgrown child seats are also at risk of being injured or killed by an inflating passenger's front airbag. Whenever possible, larger children should sit in the back seat, on a booster seat if needed, and be properly restrained with a seat belt (see page 51 for important information about protecting larger children).

To remind you of the passenger's front airbag hazards, and that children must be properly restrained in a back seat, your vehicle has warning labels on the dashboard (U.S. models) and on the front visors. Please read and follow the instructions on these labels.

U.S. Models

SUN VISORS

DASHBOARD

Canadian Models

SUN VISORS

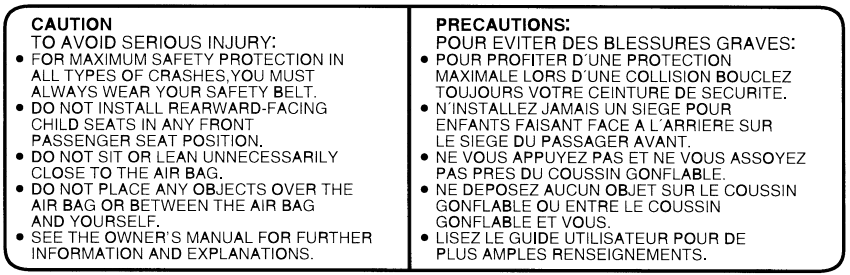

CAUTION
TO AVOID SERIOUS INJURY:
- FOR MAXIMUM SAFETY PROTECTION IN ALL TYPES OF CRASHES,YOU MUST ALWAYS WEAR YOUR SAFETY BELT.
- DO NOT INSTALL REARWARD-FACING CHILD SEATS IN ANY FRONT PASSENGER SEAT POSITION.
- DO NOT SIT OR LEAN UNNECESSARILY CLOSE TO THE AIR BAG.
- DO NOT PLACE ANY OBJECTS OVER THE AIR BAG OR BETWEEN THE AIR BAG AND YOURSELF.
- SEE THE OWNER'S MANUAL FOR FURTHER INFORMATION AND EXPLANATIONS.

PRECAUTIONS:
POUR EVITER DES BLESSURES GRAVES:
- POUR PROFITER D´UNE PROTECTION MAXIMALE LORS D´UNE COLLISION BOUCLEZ TOUJOURS VOTRE CEINTURE DE SECURITE.
- N´INSTALLEZ JAMAIS UN SIEGE POUR ENFANTS FAISANT FACE A L´ARRIERE SUR LE SIEGE DU PASSAGER AVANT.
- NE VOUS APPUYEZ PAS ET NE VOUS ASSOYEZ PAS PRES DU COUSSIN GONFLABLE.
- NE DEPOSEZ AUCUN OBJET SUR LE COUSSIN GONFLABLE OU ENTRE LE COUSSIN GONFLABLE ET VOUS.
- LISEZ LE GUIDE UTILISATEUR POUR DE PLUS AMPLES RENSEIGNEMENTS.

Protecting Children — General Guidelines

If You Must Drive with Several Children

Your vehicle has a back seat where children can be properly restrained. If you ever have to carry a group of children, and a child must ride in front:

- Place the largest child in the front seat, provided the child is large enough to wear the lap/shoulder belt properly (see page 51).
- Move the vehicle seat as far to the rear as possible (see pages 97 and 98).
- Have the child sit upright and well back in the seat (see page 16).
- Make sure the seat belt is properly positioned and secured (see page 15).

If a Child Requires Close Attention

Many parents say they prefer to put an infant or a small child in the front passenger seat so they can watch the child, or because the child requires attention.

Placing a child in the front seat exposes the child to hazards in a frontal collision, and paying close attention to a child distracts the driver from the important tasks of driving, placing both of you at risk.

If a child requires close physical attention or frequent visual contact, we strongly recommend that another adult ride with the child in a back seat. The back seat is far safer for a child than the front.

Additional Safety Precautions

- ***Never hold an infant or child on your lap.*** If you are not wearing a seat belt in a crash, you could be thrown forward and crush the child against the dashboard or a seat-back. If you are wearing a seat belt, the child can be torn from your arms and be seriously hurt or killed.
- ***Never put a seat belt over yourself and a child.*** During a crash, the belt could press deep into the child and cause serious or fatal injuries.
- ***Never let two children use the same seat belt.*** If they do, they could be very seriously injured in a crash.

- ***Make sure any unused seat belt that a child can reach is buckled, the lockable retractor is activated, and the belt is fully retracted and locked.*** If a child wraps a loose seat belt around their neck, they can be seriously or fatally injured. (See pages 47 and 48 for how to activate and deactivate the lockable retractor.)

- ***Use the childproof door locks to prevent children from opening the rear doors.*** This can prevent children from accidentally falling out (see page 91).

- ***Do not leave children alone in a vehicle.*** Leaving children without adult supervision is illegal in most states, Canadian provinces and territories, and can be very hazardous.

  For example, infants and small children left in a vehicle on a hot day can die from heatstroke. A child left alone with the key in the ignition switch can accidentally set the vehicle in motion, possibly injuring themselves or others.

- ***Lock all doors and the tailgate when your vehicle is not in use.*** Children who play in vehicles can accidentally get trapped inside. Teach your children not to play in or around vehicles.

- ***Keep vehicle keys/remote transmitters out of the reach of children.*** Even very young children learn how to unlock vehicle doors, turn on the ignition switch, and open the tailgate, which can lead to accidental injury or death.

Protecting Infants and Small Children

Protecting Infants

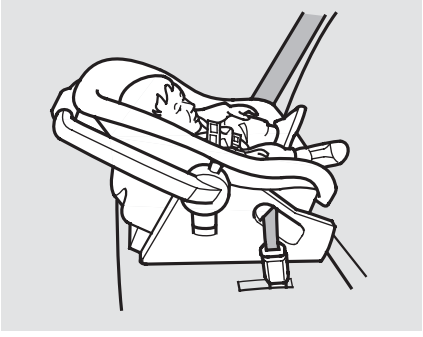

Child Seat Type
An infant must be properly restrained in a rear-facing, reclining child seat until the child reaches the seat maker's weight or height limit for the seat, and the child is at least one year old.

Only a rear-facing child seat provides proper support for a baby's head, neck, and back.

Two types of seats may be used: a seat designed exclusively for infants, or a convertible seat used in the rear-facing, reclining mode.

Do not put a rear-facing child seat in a forward-facing position. If placed facing forward, an infant could be very seriously injured during a frontal collision.

Rear-facing Child Seat Placement
A rear-facing child seat can be placed in any seating position in the back seat, but not in the front. ***Never put a rear-facing child seat in the front seat.***

If the passenger's front airbag inflates, it can hit the back of the child seat with enough force to kill or seriously injure an infant.

When properly installed, a rear-facing child seat may prevent the driver or a front passenger from moving their seat as far back as recommended, or from locking their seat-back in the desired position.

It could also interfere with proper operation of the passenger's advanced front airbag system.

In any of these situations, we strongly recommend that you install the child seat directly behind the front passenger's seat, move the seat as far forward as needed, and leave it unoccupied. Or, you may wish to get a smaller rear-facing child seat.

⚠ WARNING

Placing a rear-facing child seat in the front seat can result in serious injury or death during a crash.

Always place a rear-facing child seat in the back seat, not the front.

Protecting Small Children

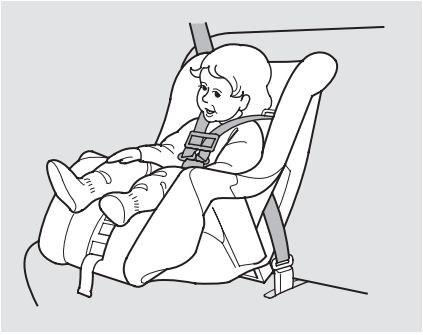

Child Seat Type
Many states, Canadian provinces and territories allow a child one year of age or older who also meets the minimum size and weight requirements to transition from a rear-facing child seat to a forward facing seat. Know the requirements where you are driving and follow the child seat instructions. Many experts recommend use of a rear-facing seat up to age two, if the child's height and weight are appropriate for a rear-facing seat.

Of the different seats available, we recommend those that have a five-point harness system as shown.

We also recommend that a small child use the child seat until the child reaches the weight or height limit for the seat.

Child Seat Placement
We strongly recommend placing a forward-facing child seat in a back seat, not the front.

Placing a forward-facing child seat in the front seat of a vehicle equipped with a passenger's airbag can be hazardous. If the vehicle seat is too far forward, or the child's head is thrown forward during a collision, an inflating airbag can strike the child with enough force to cause very serious or fatal injuries.

Even with advanced front airbags that automatically turn the passenger's front airbag off (see page 33), a back seat is the safest place for a small child.

CONTINUED

Protecting Infants and Small Children, Selecting a Child Seat

If it is necessary to put a forward-facing child seat in the front, move the vehicle seat as far to the rear as possible, and be sure the child seat is firmly secured to the vehicle and the child is properly strapped in the seat.

⚠ WARNING

Placing a forward-facing child seat in the front seat can result in serious injury or death if the front airbag inflates.

If you must place a forward-facing child seat in front, move the vehicle seat as far back as possible, and properly restrain the child.

Selecting a Child Seat

When buying a child seat, you need to choose either a conventional child seat, or one designed for use with the Lower Anchors and Tethers for CHildren (LATCH) system.

Conventional child seats must be secured to a vehicle with a seat belt, whereas LATCH-compatible seats are secured by attaching the seat to hardware built into each rear seating position in the back seat.

Since LATCH-compatible child seats are easier to install and reduce the possibility of improper installation, we recommend selecting this style.

In seating positions and vehicles not equipped with LATCH, a LATCH-compatible child seat can be installed using a seat belt.

Whatever type of seat you choose, to provide proper protection, a child seat should meet three requirements:

1. ***The child seat should meet Federal Motor Vehicle Safety Standard 213 or Canadian Motor Vehicle Safety Standard 213.*** Look for FMVSS 213 or CMVSS 213 on the box.

2. ***The child seat should be of the proper type and size to fit the child.*** Rear-facing for infants, forward-facing for small children.

3. ***The child seat should fit the vehicle seating position (or positions) where it will be used.***

Before purchasing a conventional child seat, or using a previously purchased one, we recommend that you test the seat in the specific vehicle seating position or positions where the seat will be used.

Installing a Child Seat

After selecting a proper child seat and a good place to install the seat, there are three main steps in installing the seat:

1. ***Properly secure the child seat to the vehicle.*** All child seats must be secured to the vehicle with the lap part of a lap/shoulder belt or with the LATCH (Lower Anchors and Tethers for CHildren) system. A child whose seat is not properly secured to the vehicle can be endangered in a crash.

2. ***Make sure the child seat is firmly secured.*** After installing a child seat, push and pull the seat forward and from side-to-side to verify that it is secure.

A child seat secured with a seat belt should be installed as firmly as possible. However, it does not need to be “rock solid.” Some side-to-side movement can be expected and should not reduce the child seat’s effectiveness.

If the child seat is not secure, try installing it in a different seating position, or use a different style of child seat that can be firmly secured.

3. ***Secure the child in the child seat.*** Make sure the child is properly strapped in the child seat according to the child seat maker’s instructions. A child who is not properly secured in a child seat can be seriously injured in a crash.

The following pages provide guidelines on how to properly install a child seat. A forward-facing child seat is used in all examples, but the instructions are the same for rear-facing child seats.

Installing a Child Seat

Installing a Child Seat with LATCH

Your vehicle is equipped with LATCH (Lower Anchors and Tethers for CHildren) at the rear seats to secure a child seat in any seating position: one in each outer seating position, or one in the center.

The five lower anchors are located between the seat-back and seat bottom, and are to be used only with a child seat designed for use with LATCH.

The location of each lower anchor is indicated by a small button above the anchor point.

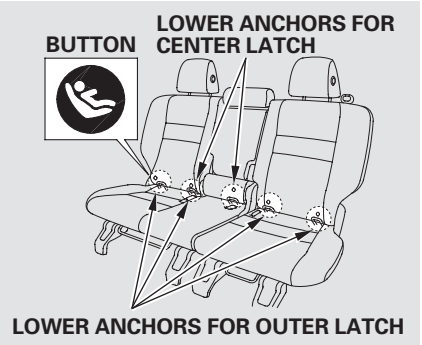

When you install a child seat in the rear center seating position, use the center lower anchors as shown in the illustration. To install a child seat in either outer seating position, use the outer lower anchors. You can install up to two child seats at a time using the outer lower anchors.

Do not attach two child seat connectors to a single lower anchor at a time.

Using the Outer LATCH

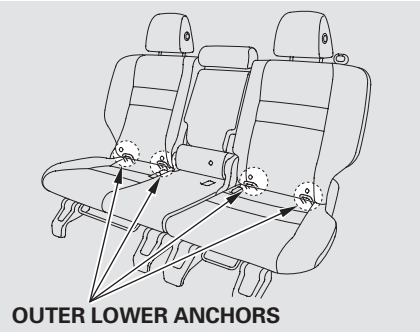

To install a LATCH-compatible child seat in either of the rear outer seats:

1. Store the seat belt buckle or tongue in the storage pockets.

2. Make sure there are no objects near the anchors that could prevent a secure connection between the child seat and the anchors.

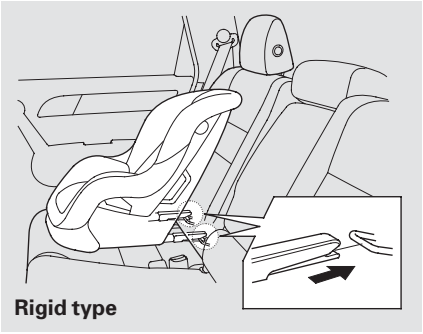

3. Place the child seat on the vehicle seat, then attach the seat to the lower anchors according to the child seat maker's instructions.

Some LATCH-compatible seats have a rigid-type connector as shown above.

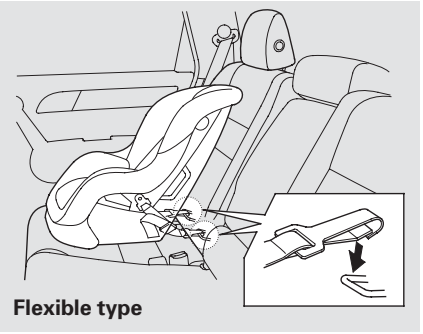

Other LATCH-compatible seats have a flexible-type connector as shown above.

4. Whatever type you have, follow the child seat maker's instructions for adjusting or tightening the fit.

5. *If equipped*
   Remove the dual deck cargo shelf (see page 117).

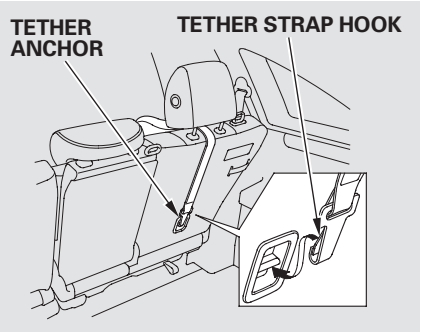

6. Route the tether strap over the seat-back and through the legs of the head restraint, then attach the tether strap hook to the anchor, making sure the tether strap is not twisted.

CONTINUED

Installing a Child Seat

7. Tighten the strap according to the seat maker's instructions.

8. Push and pull the child seat forward and from side-to-side to verify that it is secure.

9. Reinstall the dual deck cargo shelf.

Using the Center LATCH

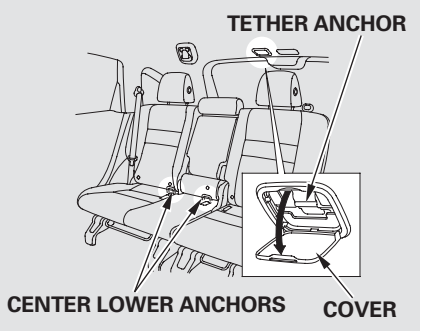

To install a LATCH-compatible child seat in the rear center seating position, use the center lower anchors as shown above.

1. Remove the head restraint (see page 102). Make sure the removed head restraint is secured in the cargo area. Reinstall the head restraint when the child seat is removed.

2. Follow step 1 through 4 as described previously to secure the child seat.

3. Pull down the cover to access the tether anchor.

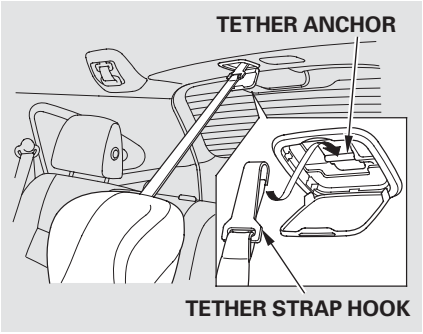

4. Route the tether strap over the seat-back, then attach the tether strap hook to the tether anchor in the ceiling, making sure the strap is not twisted. Tighten the strap according to the seat maker's instructions.

5. Push and pull the child seat forward and from side-to-side to verify that it is secure.

Installing a Child Seat with a Lap/ Shoulder Belt

When not using the LATCH system, all child seats must be secured to the vehicle with the lap part of a lap/ shoulder belt.

In addition, the lap/shoulder belts in all seating positions except the driver's have a lockable retractor that must be activated to secure a child seat.

If you intend to install a child seat in the center seating position of the rear seat, make sure the detachable seat belt anchor is securely latched (see page 109).

1. With the child seat in the desired seating position, route the belt through the child seat according to the seat maker's instructions, then insert the latch plate into the buckle and remove any slack from the lap portion of the belt.

CONTINUED

Installing a Child Seat

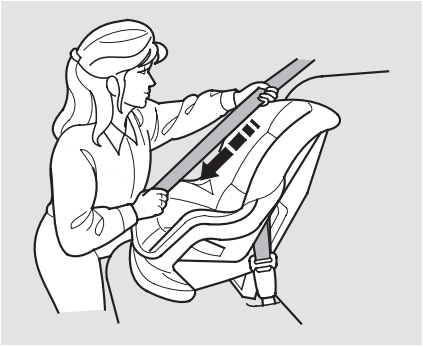

2. To activate the lockable retractor, slowly pull the shoulder part of the belt all the way out until it stops, then let the belt feed back into the retractor.

3. After the belt has retracted, tug on it. If the belt is locked, you will not be able to pull it out. If you can pull the belt out, it is not locked, and you will need to repeat these steps.

4. After confirming that the belt is locked, grab the shoulder part of the belt near the buckle, and pull up to remove any slack from the lap part of the belt. Remember, if the lap part of the belt is not tight, the child seat will not be secure.

   To remove slack, it may help to put weight on the child seat, or push on the back of the seat while pulling up on the belt.

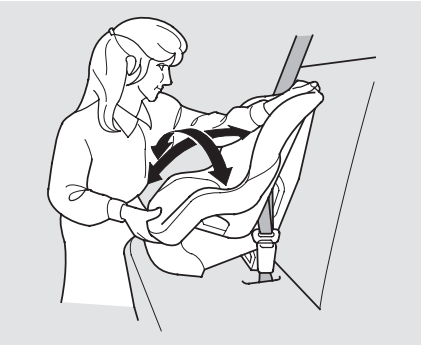

5. Push and pull the child seat forward and from side-to-side to verify that it is secure enough to stay upright during normal driving maneuvers. If the child seat is not secure, unlatch the belt, allow it to retract fully, then repeat these steps.

To deactivate the lockable retractor and remove a child seat, unlatch the buckle, unroute the seat belt, and let the belt fully retract.

Installing a Child Seat with a Tether

A child seat with a tether can be installed in any seating position in the back seat.

Each rear outside seating position has an anchorage point on the seat-back, and the center seating position has an anchorage point in the ceiling near the tailgate.

Since a tether can provide additional security to the lap/shoulder belt installation, we recommend using a tether whenever one is required or available.

Using an Outer Anchor

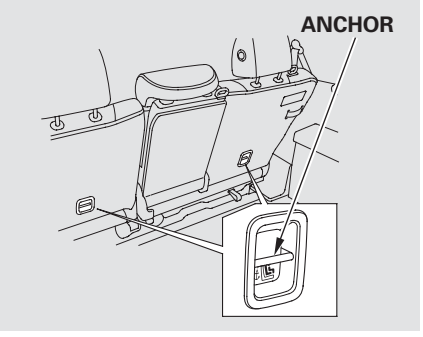

1. On vehicles with the dual deck cargo shelf, remove it (see page 117).

2. After properly securing the child seat with the lap/shoulder belt (see page 47), route the tether strap over the top of the seat-back and through the legs of the head restraint.

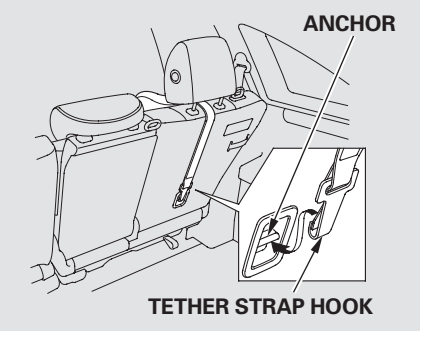

3. Attach the tether strap hook to the anchor, making sure the tether strap is not twisted.

4. Tighten the strap according to the seat maker's instructions.

5. Reinstall the dual deck cargo shelf.

CONTINUED

Installing a Child Seat

Using the Center Anchor

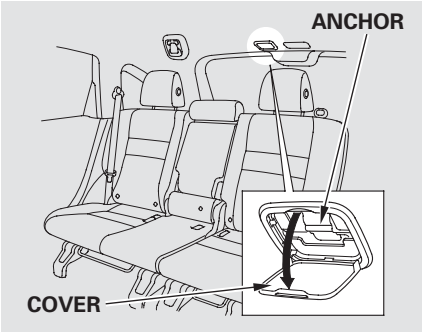

1. Remove the rear center head restraint, and store it in the cargo area.

2. After properly securing the child seat (see page 47), open the anchor cover.

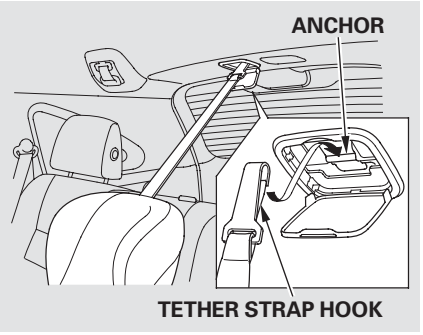

3. Route the tether strap over the seat-back, then attach the tether strap hook to the anchor, making sure the tether strap is not twisted.

4. Tighten the strap according to the seat maker's instructions.

When a child reaches the recommended weight or height limit for a forward-facing child seat, the child should sit in a back seat on a booster seat and wear the lap/shoulder belt.

The following pages give instructions on how to check proper seat belt fit, what kind of booster seat to use if one is needed, and important precautions for a child who must sit in front.

⚠ WARNING

Allowing a child age 12 or under to sit in front can result in injury or death if the passenger's front airbag inflates.

If a child must ride in front, move the vehicle seat as far back as possible, use a booster seat if needed, have the child sit up properly and wear the seat belt properly.

Checking Seat Belt Fit

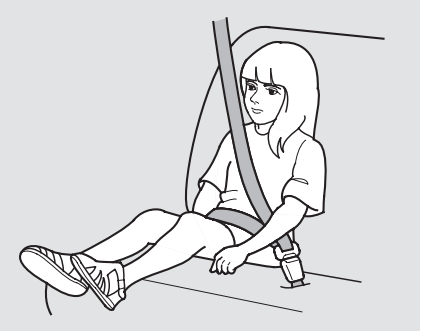

To determine if a lap/shoulder belt properly fits a child, have the child put on the seat belt, then ask yourself:

1. Does the child sit all the way back against the seat?

2. Do the child's knees bend comfortably over the edge of the seat?

CONTINUED

Protecting Larger Children

3. Does the shoulder belt cross between the child's neck and arm?

4. Is the lap part of the belt as low as possible, touching the child's thighs?

5. Will the child be able to stay seated like this for the whole trip?

If you answer yes to all these questions, the child is ready to wear the lap/shoulder belt correctly. If you answer no to any question, the child needs to ride on a booster seat.

Using a Booster Seat

A child who has outgrown a forward-facing child seat should ride in a back seat and use a booster seat until the lap/shoulder belt fits them properly without the booster.

Some states, Canadian provinces and territories also require children to use a booster seat until they reach a given age or weight (e.g., 6 years or 60 lbs). Be sure to check current laws in the states, provinces or territories where you intend to drive.

Booster seats can be high-back or low-back. Whichever style you select, make sure the booster seat meets federal safety standards (see page 42) and that you follow the booster seat maker's instructions.

If a child who uses a booster seat must ride in front, move the vehicle seat as far back as possible and be sure the child is wearing the seat belt properly.

A child may continue using a booster seat until the tops of their ears are even with the top of the vehicle's or booster's seat-back. A child of this height should be tall enough to use the lap/shoulder belt without a booster seat.

When Can a Larger Child Sit in Front

The National Highway Traffic Safety Administration and Transport Canada recommend that all children aged 12 and under be properly restrained in a back seat.

If the passenger's front airbag inflates in a moderate to severe frontal collision, the airbag can cause serious injuries to a child who is unrestrained, improperly restrained, sitting too close to the airbag, or out of position.

A side airbag also poses risks. If any part of a larger child's body is in the path of a deploying side airbag, the child could receive possibly serious injuries.

Of course, children vary widely. And while age may be one indicator of when a child can safely ride in front, there are other important factors you should consider.

Physical Size

Physically, a child must be large enough for the lap/shoulder belt to properly fit (see pages 15 and 51). If the seat belt does not fit properly, with or without the child sitting on a booster seat, the child should not sit in front.

Maturity

To safely ride in front, a child must be able to follow the rules, including sitting properly, and wearing the seat belt properly throughout a ride.

If you decide that a child can safely ride up front, be sure to:

- Carefully read the owner's manual, and make sure you understand all seat belt instructions and all safety information.
- Move the vehicle seat to the rear-most position.
- Have the child sit up straight, back against the seat, and feet on or near the floor.
- Check that the child's seat belt is properly and securely positioned.
- Supervise the child. Even a mature child sometimes needs to be reminded to fasten the seat belt or sit properly.

Protecting Larger Children

Additional Safety Precautions

- ***Do not let a child wear a seat belt across the neck.*** This could result in serious neck injuries during a crash.

- ***Do not let a child put the shoulder part of a seat belt behind the back or under the arm.*** This could cause very serious injuries during a crash. It also increases the chance that the child will slide under the belt in a crash and be injured.

- ***Two children should never use the same seat belt.*** If they do, they could be very seriously injured in a crash.

- ***Do not put any accessories on a seat belt.*** Devices intended to improve a child's comfort or reposition the shoulder part of a seat belt can make the belt less effective and increase the chance of serious injury in a crash.

Carbon Monoxide Hazard

Your vehicle's exhaust contains carbon monoxide gas. Carbon monoxide should not enter the vehicle in normal driving if you maintain your vehicle properly and follow the information on this page.

Have the exhaust system inspected for leaks whenever:

- The vehicle is raised for an oil change.
- You notice a change in the sound of the exhaust.
- The vehicle was in a crash that may have damaged the underside.

⚠ WARNING

Carbon monoxide gas is toxic. Breathing it can cause unconsciousness and even kill you.

Avoid any enclosed areas or activities that expose you to carbon monoxide.

High levels of carbon monoxide can collect rapidly in enclosed areas, such as a garage. Do not run the engine with the garage door closed. Even with the door open, run the engine only long enough to move the vehicle out of the garage.

With the tailgate open, air flow can pull exhaust gas into your vehicle's interior and create a hazardous condition. If you must drive with the tailgate open, open all the windows and set the heating and cooling system/climate control system as shown below.

If you must sit in your parked vehicle with the engine running, even in an unconfined area, adjust the heating and cooling system/climate control system as follows:

1. Select the fresh air mode.
2. Select the mode.
3. Turn the fan on high speed.
4. Set the temperature control to a comfortable setting.

Safety Labels

These labels are in the locations shown. They warn you of potential hazards that could cause serious injury or death. Read these labels carefully.

If a label comes off or becomes hard to read (except for the U.S. dashboard label which may be removed by the owner), contact your dealer for a replacement.

DASHBOARD

U.S. models only

This Vehicle is Equipped with Advanced Air Bags

Even with Advanced Air Bags

Children can be killed or seriously injured by the air bag.
The back seat is the safest place for children.
Never put a rear-facing child seat in the front.
Always use seat belts and child restraints.
See owner's manual for more information about air bags.

To be removed by owner only.

SUN VISOR

U.S. models

AIR BAG WARNING

FLIP VISOR OVER

WARNING

EVEN WITH ADVANCED AIR BAGS

- Children can be killed or seriously injured by the air bag
- The back seat is the safest place for children
- Never put a rear-facing child seat in the front
- Always use seat belts and child restraints
- See owner's manual for more information about air bags

Canadian models

CAUTION
TO AVOID SERIOUS INJURY:
- FOR MAXIMUM SAFETY PROTECTION IN ALL TYPES OF CRASHES, YOU MUST ALWAYS WEAR YOUR SAFETY BELT.
- DO NOT INSTALL REARWARD-FACING CHILD SEATS IN ANY FRONT PASSENGER SEAT POSITION.
- DO NOT SIT OR LEAN UNNECESSARILY CLOSE TO THE AIR BAG.
- DO NOT PLACE ANY OBJECTS OVER THE AIR BAG OR BETWEEN THE AIR BAG AND YOURSELF.
- SEE THE OWNER'S MANUAL FOR FURTHER INFORMATION AND EXPLANATIONS.

PRECAUTIONS:
POUR EVITER DES BLESSURES GRAVES:
- POUR PROFITER D UNE PROTECTION MAXIMALE LORS D'UNE COLLISION BOUCLEZ TOUJOURS VOTRE CEINTURE DE SECURITE.
- N'INSTALLEZ JAMAIS UN SIEGE POUR ENFANTS FAISANT FACE A L'ARRIERE SUR LE SIEGE DU PASSAGER AVANT.
- NE VOUS APPUYEZ PAS ET NE VOUS ASSOYEZ PAS PRES DU COUSSIN GONFLABLE.
- NE DEPOSEZ AUCUN OBJET SUR LE COUSSIN GONFLABLE OU ENTRE LE COUSSIN GONFLABLE ET VOUS.
- LISEZ LE GUIDE UTILISATEUR POUR DE PLUS AMPLES RENSEIGNEMENTS.

SUN VISOR

U.S. models only

WARNING: HIGHER ROLLOVER RISK

Avoid Abrupt Maneuvers and Excessive Speed.

Always Buckle Up.

See Owner's Manual For Further Information.

RADIATOR CAP

DANGER
WARNUNG
危 険
危 険

- NEVER OPEN WHEN HOT. Hot coolant will scald you.
- N'OUVREZ PAS QUAND CHAUD.
- NICHT BEI HEISSEM MOTOR ÖFFNEN.
- 熱い時あけないで下さい。
- 高温时，请勿打开

1.1

Safety Labels

DOORJAMBS

U.S. models

SIDE AIRBAG

- This car is equipped with side airbags in the front seats and side curtain airbags.
- Do not lean against the door.
- See owner's manual for more information.

Canadian models

SIDE AIRBAG

- This car is equipped with side airbags in the front seats and side curtain airbags.
- Do not lean against the door.
- See owner's manual for more information.

COUSSIN GONFLABLE LATERAL

- Cette automobile est équipée de coussins gonflables latéraux dans les sièges avant ainsi que de coussins gonflables latéraux de type rideau.
- Ne vous appuyez pas sur la porte.
- Consultez le Manuel du propriétaire pour en savoir plus.

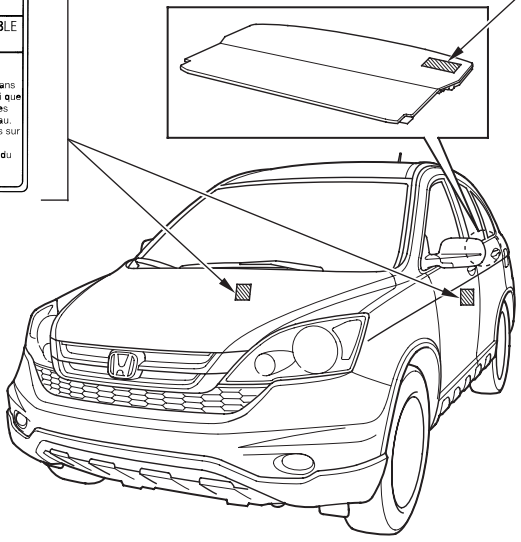

DUAL DECK CARGO SHELF

U.S. models

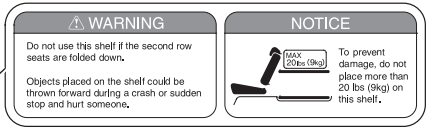

*Canadian models**

* Symbols ⚠ 📖 on labels attached to your vehicle are to remind you to read this owner's manual for proper and safe operation of your vehicle.

Instruments and Controls

This section gives information about the controls and displays that contribute to the daily operation of your vehicle. All the essential controls are within easy reach.

Control Locations 60
Instrument Panel 61
Instrument Panel Indicators..... 62
Gauges 68
Information Display..... 69
Trip Meter 69
Instant Fuel Economy 70
Average Fuel Economy..... 70
Range 70
Odometer..... 71
Fuel Gauge 71
Temperature Gauge..... 71
Outside Temperature Indicator 71
Check Fuel Cap Message..... 73
Maintenance Minder™..... 73
Controls Near the Steering Wheel 74
Windshield Wipers and Washers .. 75
Turn Signals and Headlights..... 76
Instrument Panel Brightness 79
Hazard Warning Button..... 79
Rear Window Defogger 80
Parking Brake 81
Steering Wheel Adjustment 81
Keys and Locks..... 82
Immobilizer System..... 83
Ignition Switch 84
Door Locks 85
Power Door Locks..... 85
Auto Door Locking/Unlocking.. 86
Childproof Door Locks 91
Remote Transmitter..... 92
Tailgate 95
Seats 97
Seat Heaters 111
Power Windows 112
Moonroof 113
Mirrors..... 114
Interior Convenience Items..... 116
Dual Deck Cargo Shelf 117
Beverage Holders..... 119
Center Table 120
Lower Glove Box 120
Upper Glove Box 121
Vanity Mirror 121
Sun Visor 122
Sunglasses Holder 122
Conversation Mirror 123
Accessory Power Sockets..... 123
Console Compartment 124
Coat Hook..... 125
Seat Under Tray 125
Interior Lights..... 126

Control Locations

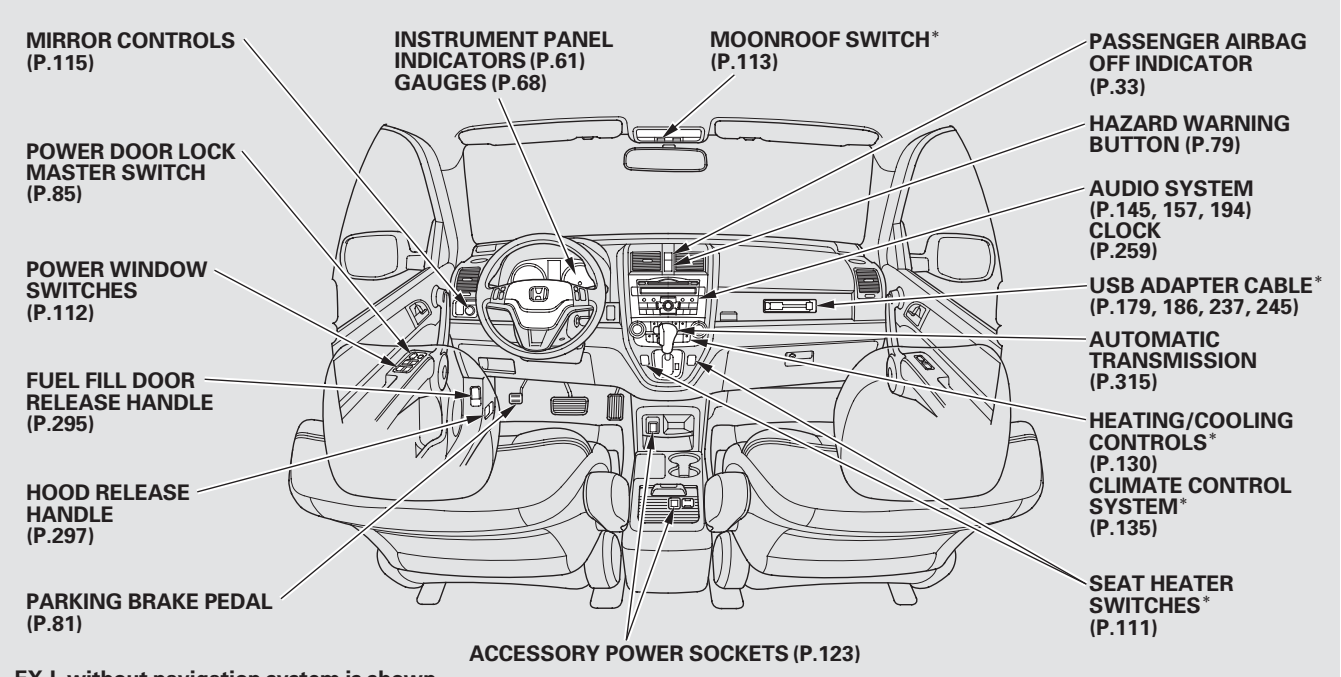

EX-L without navigation system is shown.

* : If equipped

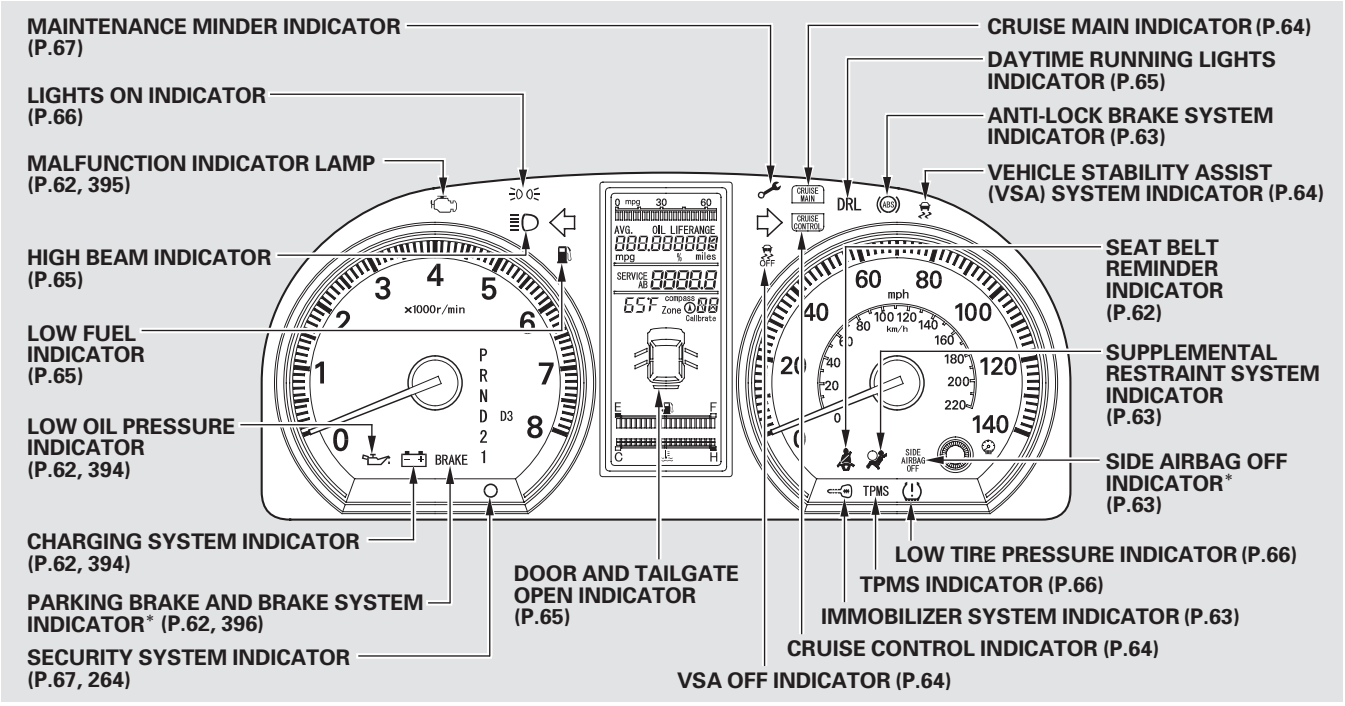

∗ : The U.S. instrument panel is shown. Differences for the Canadian models are noted in the text.

Instrument Panel Indicators

The instrument panel has many indicators that give you important information about your vehicle.

Malfunction Indicator Lamp

See page 395 .

Low Oil Pressure Indicator

The engine can be severely damaged if this indicator flashes or stays on when the engine is running. For more information, see page 394 .

Charging System Indicator

If this indicator comes on when the engine is running, the battery is not being charged. For more information, see page 394 .

U.S. Canada

Parking Brake and Brake System Indicator

This indicator has two functions:

1. It comes on when you turn the ignition switch to the ON (II) position. It is a reminder to check the parking brake. A beeper sounds if you drive with the parking brake not fully released. Driving with the parking brake not fully released can damage the brakes and tires.

2. If it stays on after you have fully released the parking brake while the engine is running, or if it comes on while driving, there could be a problem with the brake system. For more information, see page 396 .

Seat Belt Reminder Indicator

This indicator comes on when you turn the ignition switch to the ON (II) position. It reminds you and your passengers to fasten your seat belts. A beeper also sounds if you have not fastened your seat belt.

If you turn the ignition switch to the ON (II) position before fastening your seat belt, the beeper sounds, and the indicator flashes. If you do not fasten your seat belt before the beeper stops, the indicator stops flashing but remains on.

If your front passenger does not fasten their seat belt, the indicator comes on about 6 seconds after the ignition switch is turned to the ON (II) position.

If either of you do not fasten your seat belt while driving, the beeper will sound and the indicator will flash again at regular intervals. For more information, see page 19 .

Supplemental Restraint System Indicator

This indicator comes on briefly when you turn the ignition switch to the ON (II) position. If it comes on at any other time, it indicates a potential problem with your front airbags. This indicator will also alert you to a potential problem with your airbag system components. For more information, see page 32 .

U.S. Canada

Side Airbag Off Indicator

This indicator comes on briefly when you turn the ignition switch to the ON (II) position. If it comes on at any other time, it indicates that the passenger's side airbag has automatically shut off. For more information, see page 32 .

Immobilizer System Indicator

This indicator comes on briefly when you turn the ignition switch to the ON (II) position. It will then go off if you have inserted a properly coded ignition key. If it is not a properly coded key, the indicator will blink, and the engine's fuel system will be disabled (see page 83).

Anti-lock Brake System (ABS) Indicator

This indicator normally comes on for a few seconds when you turn the ignition switch to the ON (II) position, and when the ignition switch is turned to the START (III) position. If it comes on at any other time, there is a problem in the ABS. If this happens, have your vehicle checked by your dealer. With the indicator on, your vehicle still has normal braking ability but no anti-lock. For more information, see page 322 .

Instrument Panel Indicators

Vehicle Stability Assist (VSA) System Indicator

This indicator normally comes on for a few seconds when you turn the ignition switch to the ON (II) position, and when the ignition switch is turned to the START (III) position.

It flashes when VSA is active (see page 324).

If it comes on and stays on at any other time, there is a problem with the VSA system. Take your vehicle to a dealer to have it checked. Without VSA, your vehicle still has normal driving ability, but will not have VSA traction and stability enhancement. See page 324 for more information on the VSA system.

VSA OFF Indicator

It comes on as a reminder that you have turned off the vehicle stability assist (VSA) system.

This indicator normally comes on for a few seconds when you turn the ignition switch to the ON (II) position, and when the ignition switch is turned to the START (III) position. For more information, see page 324 .

Cruise Control Indicator

This indicator comes on when you set the cruise control. See page 266 for information on operating the cruise control.

Cruise Main Indicator

This indicator comes on when you turn on the cruise control system by pressing the CRUISE button (see page 266).

Turn Signal and Hazard Warning Indicators

The left or right turn signal indicator blinks when you signal a lane change or turn. If an indicator does not blink or blinks rapidly, it usually means one of the turn signal bulbs is burned out (see pages 360 and 362). Replace the bulb as soon as possible, since other drivers cannot see that you are signaling.

When you press the hazard warning button, both turn signal indicators and all turn signals on the outside of the vehicle flash.

High Beam Indicator

This indicator comes on with the high beam headlights. For more information, see page 77 .

This indicator also comes on with reduced brightness when the daytime running lights (DRL) are on (see page 78).

Daytime Running Lights Indicator

If this indicator comes on when you turn the ignition switch to the ON (II) position and release the parking brake, it means there is a problem with the DRL. There may also be a problem with the high beam headlights. Have your vehicle checked by your dealer.

Low Fuel Indicator

This indicator comes on as a reminder that you must refuel soon.

When the indicator comes on, there are about 2.3 U.S. gal (8.6 ℓ) of fuel remaining in the tank.

When the needle reaches E, there is a very small amount of fuel in the tank.

Door and Tailgate Open Indicator

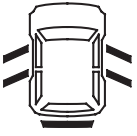

The appropriate indicator comes on in this display if the tailgate or any door is not closed tightly.

Instrument Panel Indicators

Low Tire Pressure Indicator

This indicator normally comes on for a few seconds when you turn the ignition switch to the ON (II) position. If it comes on while driving, it indicates that one or more of your vehicle's tires are significantly low on pressure.

If this happens, pull to the side of the road when it is safe, check which tire has lost pressure, and determine the cause. If it is because of a flat tire, replace the flat tire with the compact spare (see page 382), and have the flat tire repaired as soon as possible. If two or more tires are underinflated, call a professional towing service (see page 403). For more information, see page 326 .

Tire Pressure Monitoring System (TPMS) Indicator

This indicator normally comes on for a few seconds when you turn the ignition switch to the ON (II) position.

If this indicator comes on and stays on at any other time, or if it does not come on when you turn the ignition switch to the ON (II) position, there is a problem with the TPMS. With this indicator on, the low tire pressure indicator will not come on when a tire loses pressure. Take the vehicle to your dealer to have the system checked. For more information, see page 327 .

Lights On Indicator

This indicator reminds you that the exterior lights are on. It comes on when the light switch is in either the or position. If you turn the ignition switch to the ACCESSORY (I) or LOCK (0) position without turning off the light switch, this indicator will stay on. A reminder chime will also sound when you open the driver's door.

EX-L models
This indicator will also come on when the light switch is in AUTO and the lights turn on automatically.

Maintenance Minder Indicator

This indicator comes on for a few seconds when you turn the ignition switch to the ON (II) position. It reminds you that it is time to take your vehicle in for scheduled maintenance. The maintenance main items and sub items will be displayed in the information display. See page 341 for more information on the Maintenance Minder™.

This indicator goes off when your dealer resets it after completing the required maintenance service.

Washer Level Indicator

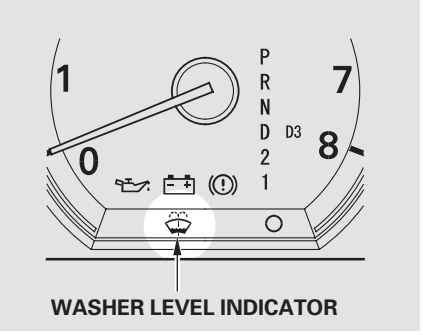

Canadian models only

This indicator comes on when the washer fluid level is low. Add washer fluid when you see this indicator (see page 354).

Security System Indicator

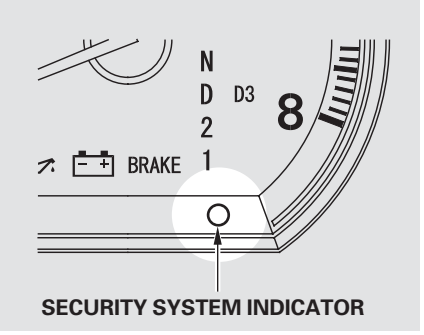

If equipped

This indicator comes on when the security system is set. See page 264 for more information on the security system.

Gauges

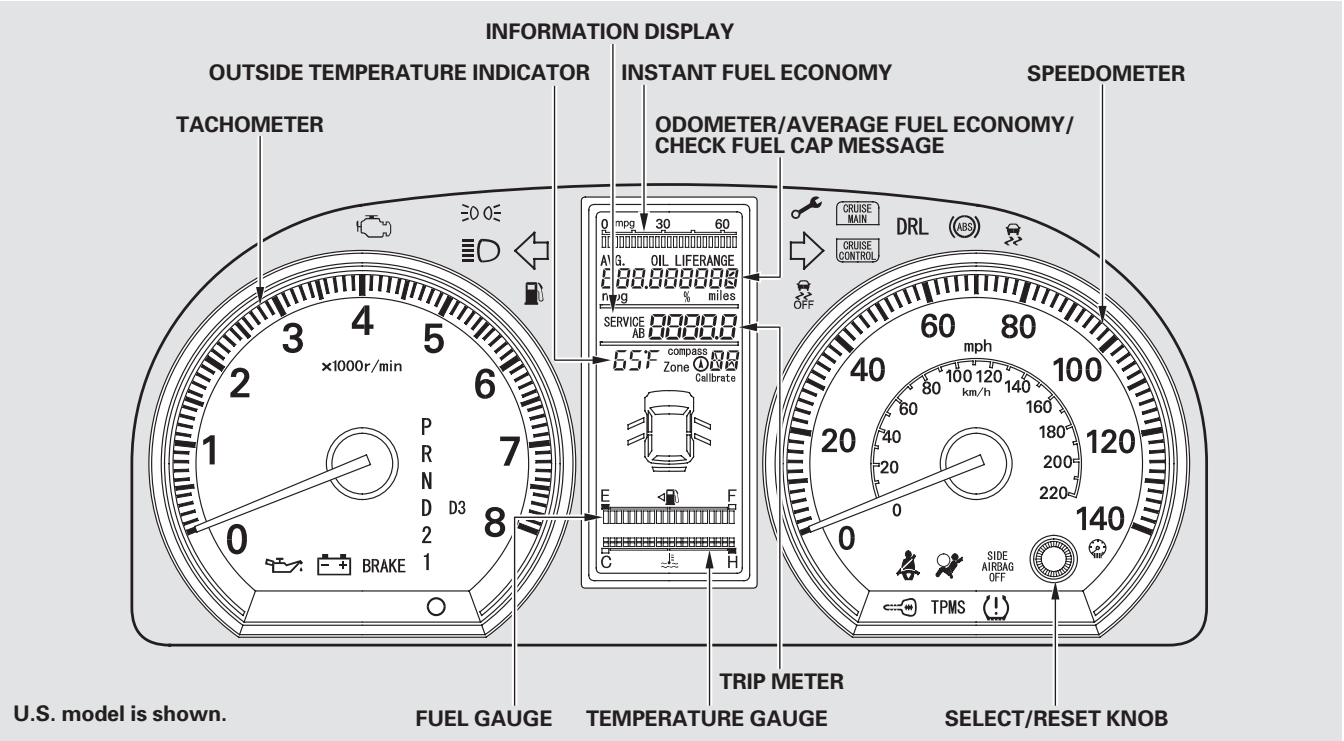

U.S. model is shown.

INFORMATION DISPLAY

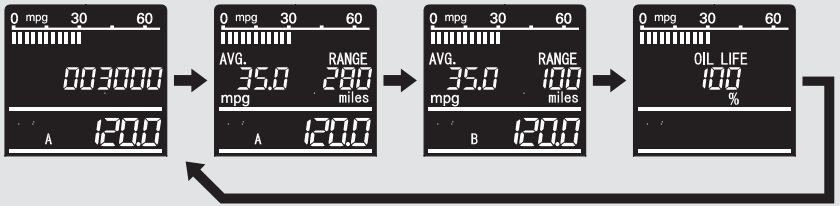

Press the SELECT/RESET knob.

U.S. model is shown.

Information Display

The information display consists of three segments. The upper segment displays current fuel mileage, the second segment displays the odometer, average fuel mileage, range (estimated distance), engine oil life, and the lower segment displays the trip meter, and maintenance item code(s).

To switch the display, press and release the select/reset knob repeatedly. When you turn the ignition switch to the ON (II) position, your last selection is displayed.

Trip Meter

This meter shows the number of miles (U.S.) or kilometers (Canada) driven since you last reset it.

There are two trip meters: Trip A and Trip B. Switch between these displays by pressing the select/reset knob repeatedly.

Each trip meter works independently, so you can keep track of two different distances.

When you turn the ignition switch to the ON (II) position, your last selection is displayed.

To reset a trip meter, display it, and then press and hold the select/reset knob until the number resets to “0.0”.

Gauges

Instant Fuel Economy

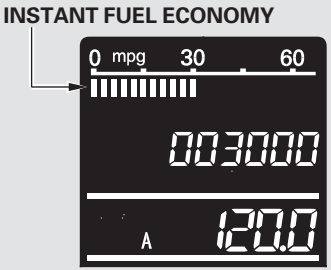

U.S. model is shown.

This display shows the instant fuel economy you are getting.

It shows the number of mpg (U.S.) or l/100 km (Canada).

Average Fuel Economy

When either of the trip meters (trip A or B) is displayed, your vehicle's average fuel economy since you last reset that trip meter can be shown on the information display (mpg on U.S. models and l/100 km on Canadian models). This number is updated once per 10 seconds. To see the average fuel economy, press and release the select/reset knob repeatedly.

When you reset a trip meter, the average fuel economy for that trip meter also resets.

Range (Estimated Distance)

This display shows the estimated distance you can travel on the fuel remaining in the tank.

This distance is estimated from the fuel economy you have achieved over the last few miles (kilometers), so it will vary with changes in speed, traffic condition, etc.

Odometer
The odometer shows the total distance your vehicle has been driven. It measures miles in U.S. models and kilometers in Canadian models. It is illegal under U.S. federal law and Canadian provincial/territorial regulations to disconnect, reset, or alter the odometer with the intent to change the number of miles or kilometers indicated.

Fuel Gauge
This shows how much fuel you have. It may show slightly more or less than the actual amount.

NOTICE

Avoid driving with an extremely low fuel level. Running out of fuel could cause the engine to misfire, damaging the catalytic converter.

Temperature Gauge
This shows the temperature of the engine's coolant. During normal operation, the reading should be in the middle of the gauge. In severe driving conditions, such as very hot weather or a long period of uphill driving, the reading may reach near the red mark. If it reaches the red (Hot) mark, pull safely to the side of the road. See page 392 for instructions and precautions on checking the engine's cooling system.

Outside Temperature Indicator

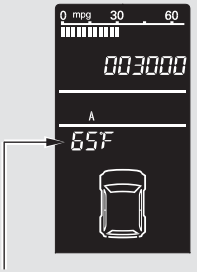

OUTSIDE TEMPERATURE INDICATOR

If equipped
This indicator displays the outside temperature in Fahrenheit (U.S. models) or Celsius (Canadian models).

CONTINUED

Gauges

The temperature sensor is in the front bumper. Therefore, the temperature reading can be affected by heat reflection from the road surface, engine heat, and the exhaust from surrounding traffic. This can cause an incorrect temperature reading when your speed is under 19 mph (30 km/h).

The sensor delays the display update until it reaches the correct outside temperature. This may take several minutes.

If the outside temperature is incorrectly displayed, you can adjust it up to ±5°F in U.S. models (±3°C in Canadian models) warmer or cooler.

NOTE: The temperature must be stabilized before doing this procedure.

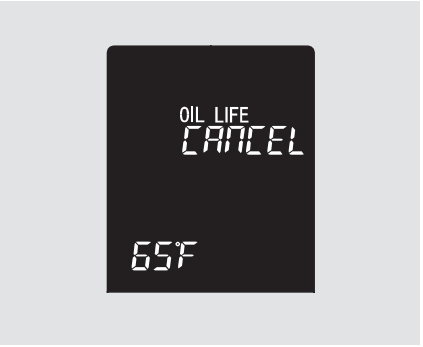

To adjust the outside temperature display, press and hold the select/reset knob for 10 seconds. The display changes as shown above. Select the outside temperature indicator by turning the select/reset knob. The display begins to blink. Push the same knob to enter this setting, then turn it to adjust the temperature. The following sequence will appear for each: 0, 1, 2, 3, 4, 5, −5, −4, −3, −2, −1, 0 (U.S.) or 0, 1, 2, 3, −3, −2, −1, 0 (Canada).

When it reaches the desired value, push the select/reset knob to enter the setting. You should see the new outside temperature displayed.

In certain weather conditions, temperature readings near freezing (32°F, 0°C) could mean that ice is forming on the road surface.

Check Fuel Cap Message
If your fuel fill cap is loose or missing, a “CHECK FUEL CAP” message appears on the information display after you start the engine. For more information, see page 296 .

Maintenance Minder™
The information display in the instrument panel shows you the engine oil life and maintenance service items when the ignition switch is in the ON (II) position. This information helps to keep you aware of the periodic maintenance your vehicle needs for continued trouble-free driving. Refer to page 341 for more information.

Controls Near the Steering Wheel

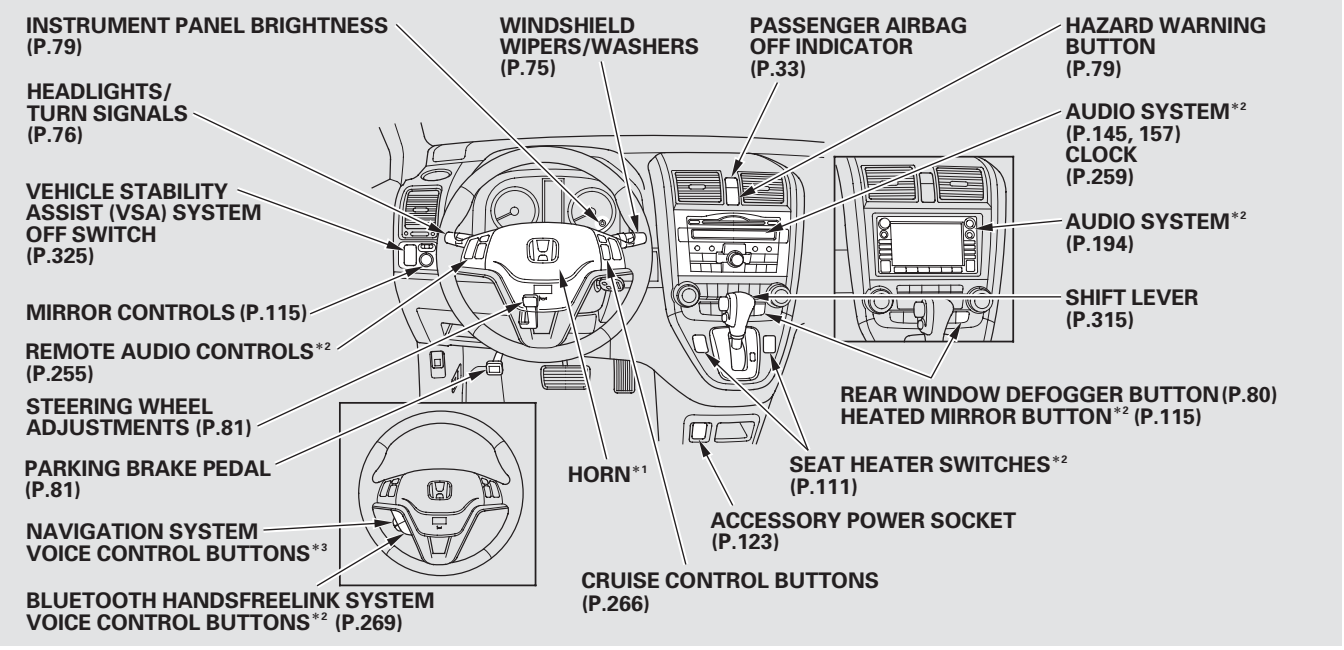

*1 : To use the horn, press the center pad of the steering wheel.
*2 : If equipped.
*3 : Refer to the navigation system manual.

Windshield Wiper

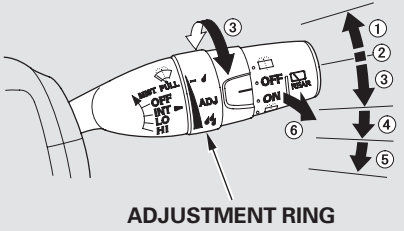

EX-L model is shown.

1. MIST
2. OFF
3. INT — Intermittent
4. LO — Low speed
5. HI — High speed
6. Windshield washers

Push the right lever up or down to select a position.

MIST — The wipers run at high speed until you release the lever.

OFF — The wipers are not activated.

INT — The wipers operate every few seconds. At low speed and high speed, the wipers run continuously.

On all models except LX
The length of the wiper interval is varied automatically according to the vehicle's speed.
Vary the delay by turning the adjustment ring. If you turn it to the shortest delay (position), the wipers change to low speed operation when the vehicle speed exceeds 12 mph (20 km/h).

LO — The wipers run at low speed.

HI — The wipers run at high speed.

Windshield Washers — Pull the wiper control lever toward you, and hold it. The washers spray until you release the lever. The wipers run at low speed, then complete one more sweep after you release the lever.

Windshield Wipers and Washers, Turn Signals and Headlights

Rear Window Wiper and Washer

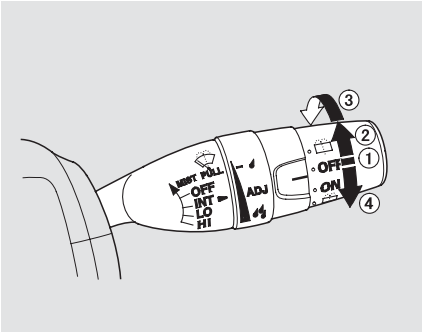

1. OFF
   When you turn the wiper switch to the “OFF” position, the wiper will return to its parked position.

2. Rotate the switch clockwise to turn the rear window wiper ON. The wiper operates every 7 seconds after completing two sweeps.

3. Hold past ON to activate the rear window wiper a few times and to spray the rear window washer.

4. Rotate the switch counterclockwise also to spray the window washer and turn the wiper on.

When you shift the transmission to the reverse position with the front windshield wiper activated, the rear wiper operates automatically even if the rear wiper switch is off.

The rear window washer uses the same fluid reservoir as the windshield washer.

Turn Signals and Headlights

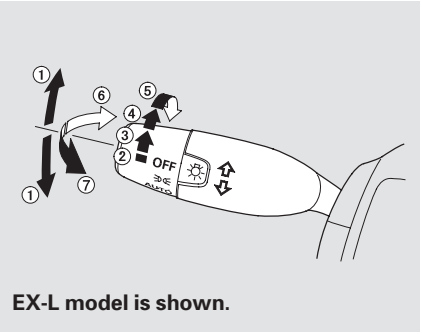

EX-L model is shown.

1. Turn Signal
2. OFF
3. Parking and interior lights
4. AUTO*
5. Headlights on
6. High Beams
7. Flash high beams

* : If equipped

Turn Signal — Push down on the lever to signal a left turn and up to signal a right turn. To signal a lane change, push lightly on the lever, and hold it. The lever will return to center when you release it or complete a turn.

Headlights — Turning the switch to the " " position turns on the parking lights, taillights, instrument panel lights, side-marker lights, and rear license plate light.

Turning the switch to the " " position turns on the headlights. If you leave the lights on with the key removed from the ignition switch, you will hear a reminder chime when you open the driver's door.

When the light switch is in either of these positions, the lights on indicator comes on as a reminder.

This indicator stays on if you leave the lights on and turn the ignition switch to the ACCESSORY (I) or LOCK (0) position.

High Beams — Push the lever forward and the high beam indicator will come on (see page 65). Pull it back to return to low beams.

To flash the high beams, pull the lever back lightly, then release it. The high beams will stay on as long as you hold the lever back.

EX-L models only

AUTO — The automatic lighting feature turns on the headlights and all other exterior lights, when it senses low ambient light.

To turn on automatic lighting, turn the light switch to AUTO. The lights will come on automatically when the outside light level becomes low (at dusk, for example). The lights on indicator comes on as a reminder. The lights and indicator will turn off automatically when the system senses high ambient light.

The lights will remain on when you turn off the ignition switch. They will turn off automatically when you remove the key and open the driver's door. To turn them on again, either turn the ignition switch to the ON (II) position or turn the light switch to the position.

CONTINUED

Turn Signals and Headlights

Even with the automatic lighting feature turned on, we recommend that you turn on the lights manually when driving at night or in a dense fog, or when you enter dark areas such as long tunnels or parking facilities.

Do not leave the light switch in AUTO if you will not be driving the vehicle for an extended period (a week or more). You should also turn off the lights if you plan to leave the engine idling or off for a long time.

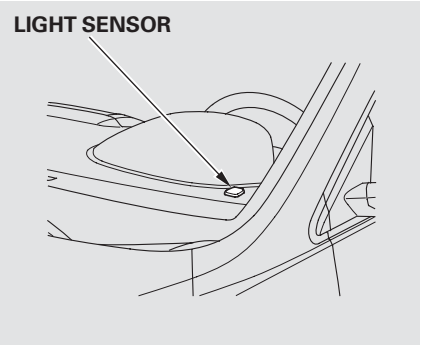

The automatic lighting feature is controlled by a sensor located on top of the dashboard. Do not cover this sensor or spill liquids on it.

Daytime Running Lights

With the headlight switch in the off or ≡DOC≡ position, the high beam headlights and the high beam indicator come on with reduced brightness when you turn the ignition switch to the ON (II) position and release the parking brake. They remain on until you turn the ignition switch off, even if you set the parking brake.

The headlights revert to normal operation when you turn them on with the switch.

Instrument Panel Brightness, Hazard Warning Button

Instrument Panel Brightness

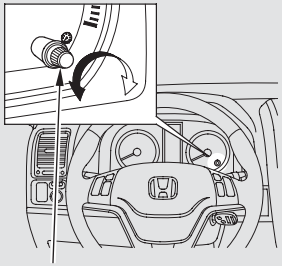

INSTRUMENT PANEL BRIGHTNESS CONTROL KNOB

You can change the instrument panel brightness only when the light switch is on.
Turn the knob on the lower part of the instrument panel to adjust the brightness.
You will hear a beep when maximum or minimum brightness is reached.

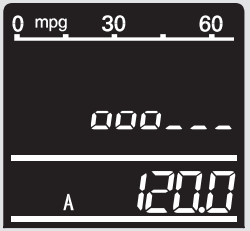

To reduce glare at night, the instrument panel illumination dims when you turn the light switch to ≣DC or ≣D . Turning the select/reset knob fully to the right until you hear a beep will cancel the reduced brightness.

Hazard Warning Button

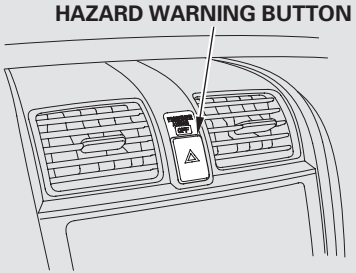

U.S. model is shown.

Push the button between the center vents to turn on the hazard warning lights (four-way flashers). This causes all four outside turn signals and both indicators in the instrument panel to flash. Use the hazard warning lights if you need to park in a dangerous area near heavy traffic, or if your vehicle is disabled.

Rear Window Defogger

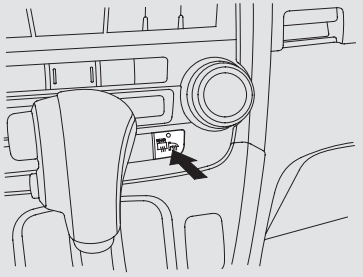

Automatic air conditioning system type is shown.

The rear window defogger will clear fog, frost, and thin ice from the window. Push the defogger button to turn it on and off. The indicator in the button comes on to show the defogger is on. It also shuts off when you turn off the ignition switch. You have to turn the defogger on again when you restart the vehicle.

On vehicles with automatic air conditioning system
The defogger will shut itself off within about 10 to 30 minutes according to the outside temperature (over 32°F, 0°C).

Make sure the rear window is clear and you have good visibility before starting to drive.

The defogger wires on the inside of the rear window can be accidentally damaged. When cleaning the glass, always wipe side-to-side.

If equipped
Pushing this button also turns the mirror heaters on or off. For more information, see page 115 .

Parking Brake

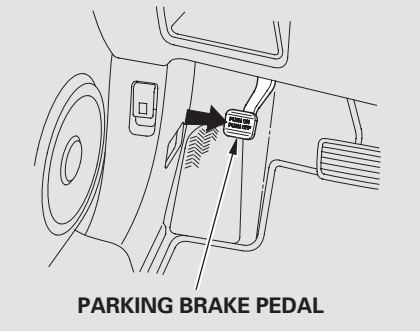

To apply the parking brake, push the pedal down with your foot. To release it, push on the pedal again. The parking brake indicator on the instrument panel should go out when the parking brake is fully released (see page 62).

NOTICE

Driving the vehicle with the parking brake applied can damage the rear brakes and hubs. A beeper will sound if the vehicle is driven with the parking brake on.

Steering Wheel Adjustment

Make any steering wheel adjustment before you start driving.

⚠WARNING

Adjusting the steering wheel position while driving may cause you to lose control of the vehicle and be seriously injured in a crash.

Adjust the steering wheel only when the vehicle is stopped.

1. Push the lever under the steering column all the way down.
2. Move the steering wheel up or down, and in or out, so it points toward your chest, not toward your face. Make sure you can see the instrument panel gauges and indicators.

CONTINUED

Steering Wheel Adjustment, Keys and Locks

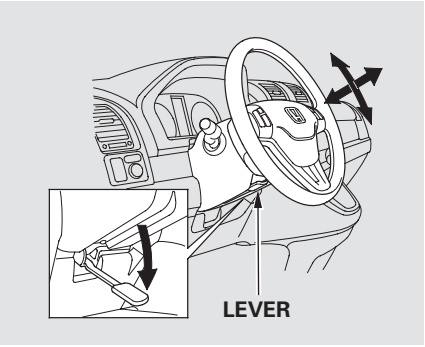

3. Push the lever up to lock the steering wheel in position.

4. Make sure you have securely locked the steering wheel in place by trying to move it up, down, in, and out.

Keys and Locks

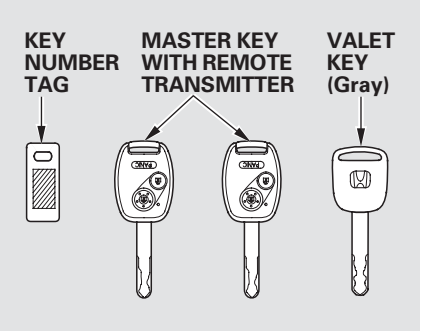

The master key fits all the locks on your vehicle. The valet key works only in the ignition and the driver's door lock. You can keep the glove box locked when you leave your vehicle and the valet key at a parking facility.

You should have received a key number tag with your keys. You will need this key number if you ever have to get a lost key replaced. Use only Honda-approved key blanks.

These keys contain electronic circuits that are activated by the immobilizer system. They will not work to start the engine if the circuits are damaged.

- Protect the keys from direct sunlight, high temperature, and high humidity.
- Do not drop the keys or set heavy objects on them.
- Keep the keys away from liquids. If they get wet, dry them immediately with a soft cloth.

  The valet key does not contain a battery. Do not try to take it apart.

Immobilizer System

The immobilizer system protects your vehicle from theft. If an improperly coded key (or other device) is used, the engine's fuel system is disabled.

When you turn the ignition switch to the ON (II) position, the immobilizer system indicator should come on briefly, then go off. If the indicator starts to blink, it means the system does not recognize the coding of the key. Turn the ignition switch to the LOCK (0) position, remove the key, reinsert it, and turn the ignition switch to the ON (II) position again.

The system may not recognize your key's coding if another immobilizer key or other metal object (i.e. key chain) is near the ignition switch when you insert the key.

If the system repeatedly does not recognize the coding of your key, contact your dealer.

Do not attempt to alter this system or add other devices to it. Electrical problems could result that may make your vehicle inoperable.

If you have lost your key and cannot start your engine, contact your dealer.

NOTICE

Always take the ignition key with you whenever you leave the vehicle alone.

As required by the FCC:
This device complies with Part 15 of the FCC rules. Operation is subject to the following two conditions: (1) This device may not cause harmful interference, and (2) this device must accept any interference received, including interference that may cause undesired operation.

Changes or modifications not expressly approved by the party responsible for compliance could void the user's authority to operate the equipment.

This device complies with Industry Canada Standard RSS-210.
Operation is subject to the following two conditions: (1) this device may not cause interference, and (2) this device must accept any interference that may cause undesired operation of the device.

Ignition Switch

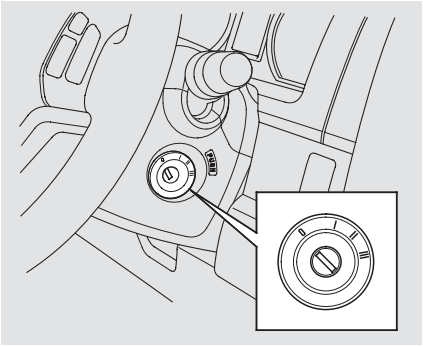

The ignition switch has four positions: LOCK (0), ACCESSORY (I), ON (II), and START (III).

LOCK (0) — You can insert or remove the key only in this position. To turn the key, the shift lever must be in Park, and you must push the key in slightly.

If the front wheels are turned, the anti-theft lock may make it difficult to turn the key. Firmly turn the steering wheel to the left or right as you turn the key.

ACCESSORY (I) — You can operate the audio system and the accessory power sockets in this position.

ON (II) — This is the normal key position when driving. Several of the indicators on the instrument panel come on as a test when you turn the ignition switch from the ACCESSORY (I) to the ON (II) position.

START (III) — Use this position only to start the engine. The switch returns to the ON (II) position when you let go of the key.

You will hear a reminder beeper if you leave the key in the LOCK (0) or the ACCESSORY (I) position and open the driver's door. Remove the key to turn off the beeper.

The shift lever must be in Park before you can remove the key from the ignition switch.

Power Door Locks

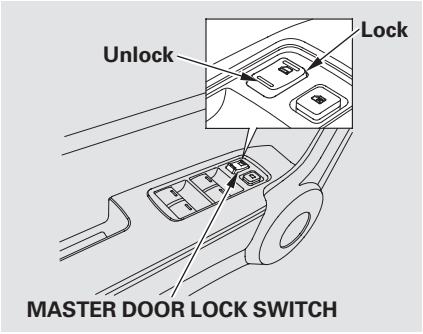

To lock all doors and the tailgate, push the top of the master door lock switch on either front door, pull the lock tab rearward on the driver's door, or use the key on the outside lock on the driver's door.

Pushing the rear of either master door lock switch will unlock all doors and the tailgate. Pushing forward the lock tab on the driver's door unlocks only that door.

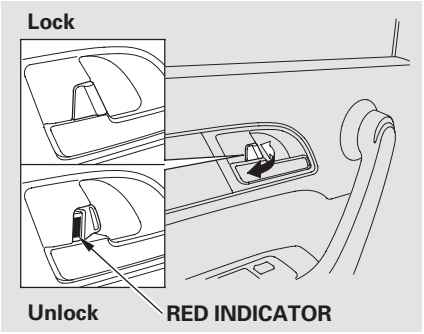

The lock tab on any passenger's door locks and unlocks that door.

When the door is unlocked, you can see the red indicator on the lock tab above the inner door handle.

All doors and the tailgate can be locked from the outside by using the key in the driver's door lock. To unlock only the driver's door, insert the key, turn the key, and release it. The remaining doors and the tailgate unlock when you turn the key a second time within a few seconds.

To lock any passenger's door when getting out of the vehicle, pull the lock tab rearward and close the door. To lock the driver's door, remove the key from the ignition switch, pull the lock tab rearward or push the top of the master switch, then close the door.

CONTINUED

Door Locks

Lockout Prevention
If you forget and leave the key in the ignition switch, lockout prevention will not allow you to lock the driver's door.
With any door and the tailgate open and the key in the ignition, locking with the master door lock switch is disabled. The lock tab on the driver's door is not disabled if the driver's door is closed. Pulling the driver's lock tab rearward will lock all doors and the tailgate. If you try to lock an open driver's door by pulling the lock tab rearward, the lock tab on the driver's door pops out and unlocks the driver's door.

Auto Door Locking/Unlocking
Your vehicle has customizable settings for the doors and tailgate to automatically lock and unlock. There are default settings for each of these features. You can turn off or change the settings for these features as described on the following pages.

When you customize the setting, make sure your vehicle is parked safely, the engine is off, and the parking brake is applied. Make all settings before you start driving.

Auto Door Locking
The auto door locking feature has three possible settings:

- The auto door locking is deactivated all the time.
- The doors and tailgate lock whenever you move the shift lever out of the Park (P) position.
- The doors and tailgate lock when the vehicle speed reaches 10 mph (15 km/h).
  This is the default setting.

To turn off the Auto Door Lock modes:

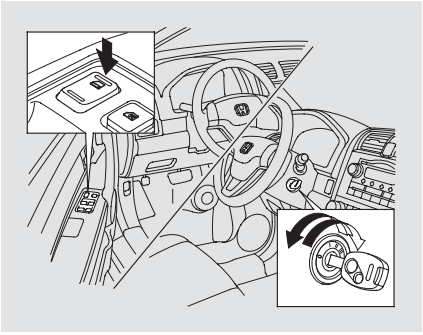

1. Make sure the shift lever is in the Park (P) position.

2. Turn the ignition switch to the ON (II) position, and open the driver's door.

3. Push and hold the front of the master door lock switch on the driver's door until you hear a click (after about 5 seconds).

4. Release the switch, and within 20 seconds, turn the ignition switch to the LOCK (0) position.

To program the Park Lock mode:
Locks all doors and tailgate when the shift lever is moved out of the Park (P) position.

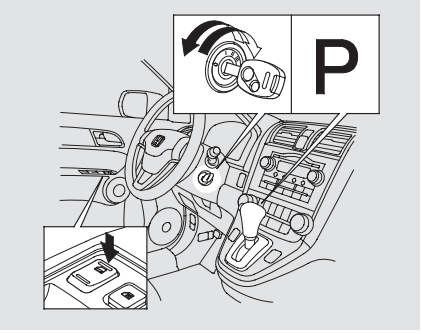

1. Make sure the shift lever is in the Park (P) position.

2. Turn the ignition switch to the ON (II) position, and make sure to close the driver's door.

CONTINUED

Door Locks

3. Push and hold the front of the master door lock switch on the driver's door. You will hear a click. Keep holding the switch until you hear another click (after about 5 seconds).

4. Release the switch, and within 20 seconds, turn the ignition switch to the LOCK (0) position.

To program the Drive Lock mode:
Locks all doors and the tailgate when the vehicle's speed reaches about 10 mph (15 km/h).

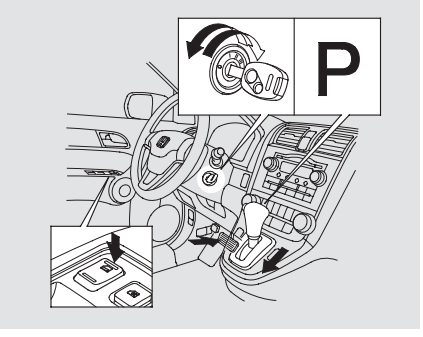

1. Make sure the shift lever is in the Park (P) position.

2. Turn the ignition switch to the ON (II) position, and make sure to close the driver's door.

3. Push and hold the brake pedal, and move the shift lever out of the Park (P) position.

4. Push and hold the front of the master door lock switch on the driver's door. You will hear a click. Keep holding the switch until you hear another click (after about 5 seconds).

5. Release the switch, and within 20 seconds, turn the ignition switch to the ACCESSORY (I) position. Move the shift lever to the Park (P) position.

6. Turn the ignition switch to the LOCK (0) position.

Auto Door Unlocking
The auto door unlocking feature has five possible settings:

- The auto door unlocking is deactivated all the time.
- The driver's door unlocks when you move the shift lever to the Park (P) position with the brake pedal depressed.
  This is the default setting.
- All doors and tailgate unlock when you move the shift lever to the Park (P) position with the brake pedal depressed.
- The driver's door unlocks whenever you turn the ignition switch to the ACCESSORY (I) position.
- All doors and tailgate unlock whenever you turn the ignition switch to the ACCESSORY (I) position.

To turn off the Auto Door Unlock modes:

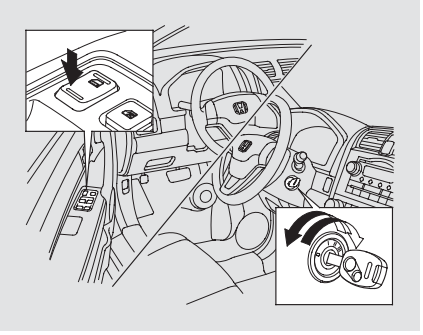

1. Make sure the shift lever is in the Park (P) position.
2. Turn the ignition switch to the ON (II) position, and open the driver's door.
3. Push and hold the rear of the master door lock switch on the driver's door. You will hear a click, and after about 5 seconds, you will hear another click.
4. Release the switch, and within 20 seconds, turn the ignition switch to the LOCK (0) position.

CONTINUED

Door Locks

To program the Park Unlock mode:
Unlocks the driver's door or all doors and tailgate when the shift lever is moved into the Park (P) position with the brake pedal depressed.

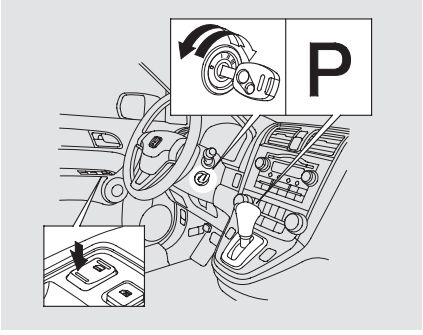

1. Make sure the shift lever is in the Park (P) position.

2. Turn the ignition switch to the ON (II) position, and make sure to close the driver's door.

3. Push and hold the rear of the master door lock switch on the driver's door. You will hear a click. Continue to hold down the switch:

   - Until you hear another click (after about 5 seconds) to activate *driver's door unlock feature.*

   - Or, until you hear two more clicks (after about 10 seconds) to activate *all doors and tailgate unlock feature.*

4. Release the switch, and within 20 seconds, turn the ignition switch to the LOCK (0) position.

To program the Ignition Switch Unlock mode:
Unlocks the driver's door or all doors and tailgate when the ignition switch is moved out of the ON (II) position.

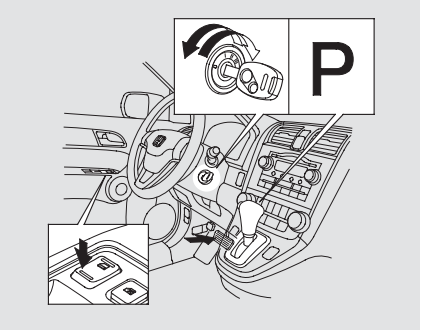

1. Make sure the shift lever is in the Park (P) position.

2. Turn the ignition switch to the ON (II) position, and make sure to close the driver's door.

3. Push and hold the brake pedal, then move the shift lever out of the Park (P) position.

4. Push and hold the rear of the master door lock switch on the driver's door. You will hear a click. Continue to hold down the switch:

   - Until you hear another click (after about 5 seconds) to activate *driver's door unlock feature.*

   - Or, until you hear two more clicks (after about 10 seconds) to activate *all doors and tailgate unlock feature.*

5. Release the switch, and within 20 seconds, turn the ignition switch to the ACCESSORY (I) position. Move the shift lever to the Park (P) position.

6. Turn the ignition switch to the LOCK (0) position.

Childproof Door Locks

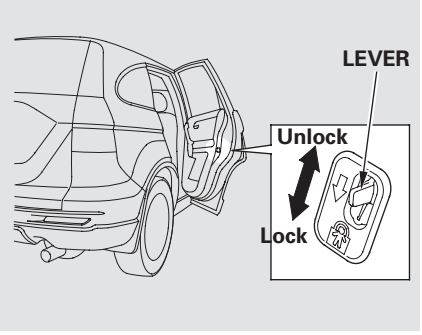

The childproof door locks are designed to prevent children seated in the rear from accidentally opening the rear doors. Each rear door has a lock lever near the edge. With the lever in the LOCK position (lever is down), the door cannot be opened from the inside regardless of the position of the lock tab. To open the door, push the lock tab forward and use the outside door handle.

Remote Transmitter

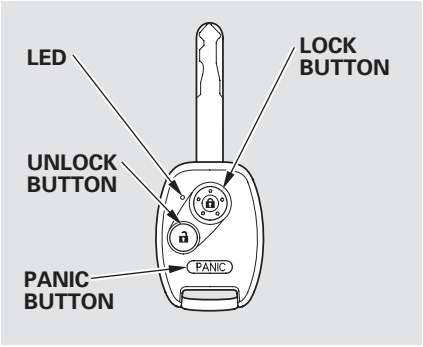

LOCK — Press this button once to lock all doors and the tailgate. Some exterior lights will flash once. When you push LOCK twice within 5 seconds, you will hear a beep to verify that the doors and the tailgate are locked and the security system (if equipped) has set. You cannot lock the doors and the tailgate if any door or the tailgate is not fully closed or the key is in the ignition switch.

UNLOCK — Press this button once to unlock the driver's door. Push it twice to unlock the remaining doors and the tailgate. Some exterior lights will flash twice each time you press the button.

The ceiling light and the spot light (if equipped) comes on when you press the UNLOCK button if the lights are in the door activated position. If you do not open any door or the tailgate within 30 seconds, the light fades out. If you relock the doors and the tailgate with the remote transmitter before 30 seconds have elapsed, the light(s) will go off immediately.

If you do not open any door or the tailgate within 30 seconds, they will automatically relock, and the security system (if equipped) will reset.

PANIC — Press this button for about 2 seconds to attract attention: the horn will sound, and the exterior lights will flash for about 30 seconds. To cancel panic mode, press any other button on the remote transmitter, or turn the ignition switch to the ON (II) position.

Remote Transmitter Care

- Avoid dropping or throwing the transmitter.
- Protect the transmitter from extreme temperature.
- Do not immerse the transmitter in any liquid.
- If you lose a transmitter, the replacement needs to be reprogrammed by your dealer.

Replacing the Transmitter Battery

If it takes several pushes on the button to lock or unlock the doors and the tailgate, replace the battery as soon as possible.

Battery type: CR1616

To replace the battery:

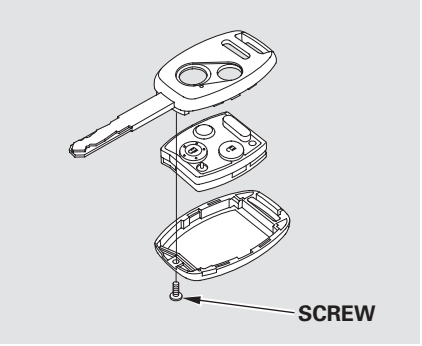

1. Remove the screw at the base of the transmitter with a small Phillips-head screwdriver.

NOTE: Be careful when removing this screw as the head of the screw can strip out.

2. Separate the transmitter by prying its middle seam with your fingernail.

CONTINUED

Remote Transmitter

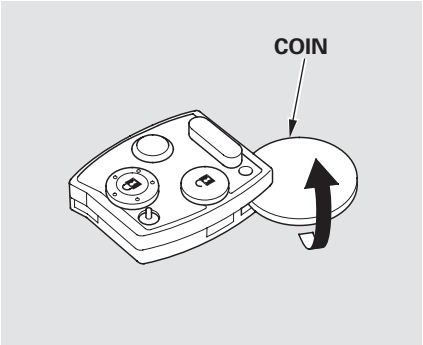

3. Inside the transmitter, separate the inner cover from the keypad by carefully prying on the edge with a coin.

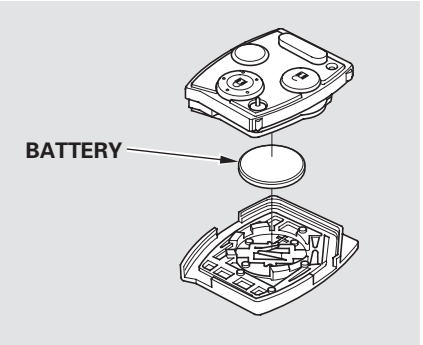

4. Remove the old battery and note the polarity. Make sure the polarity of the new battery is the same (+ side facing down), then insert it in the keypad.

   An improperly disposed of battery can hurt the environment. Always confirm local regulations for battery disposal.

5. Install the parts in reverse order.

As required by the FCC:
This device complies with Part 15 of the FCC rules. Operation is subject to the following two conditions: (1) This device may not cause harmful interference, and (2) this device must accept any interference received, including interference that may cause undesired operation.

Changes or modifications not expressly approved by the party responsible for compliance could void the user's authority to operate the equipment.

This device complies with Industry Canada Standard RSS-210.
Operation is subject to the following two conditions: (1) this device may not cause interference, and (2) this device must accept any interference that may cause undesired operation of the device.

Tailgate

The tailgate will lock when you lock the driver's door with the key, the remote transmitter, the master door lock switch, or the lock tab on the driver's door.

To unlock the tailgate, turn the key clockwise twice, push the rear of the master door lock switch, or push the UNLOCK button twice on the remote transmitter.

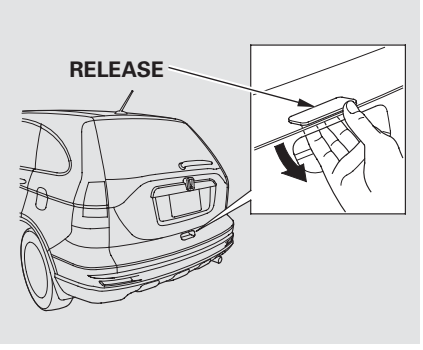

To open the tailgate, push the release, and lift up. To close the tailgate, use the tailgate handle to lower it, then press down on the back edge.

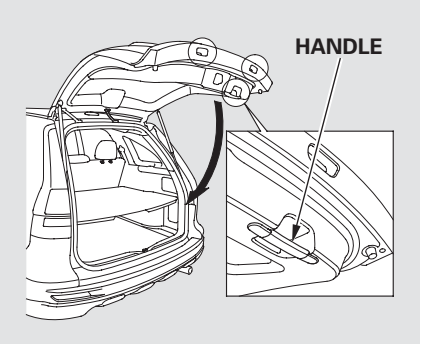

Keep the tailgate closed at all times while driving to avoid damaging the tailgate and to prevent exhaust gas from getting into the interior. See **Carbon Monoxide Hazard** on page 55.

Tailgate

Unlocking the Tailgate

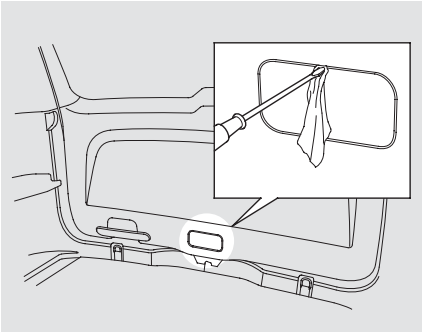

If the power door lock system cannot unlock the tailgate, unlock it manually.

Place a cloth on the top side of the cover to prevent scratches, then use a small flat-tip screwdriver to remove the cover on the back of the tailgate.

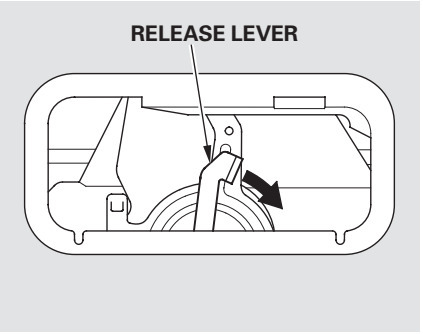

Push the release lever to the lower right as shown.

If you need to unlock the tailgate manually, it means there is a problem with the tailgate. Have the vehicle checked by your dealer.

EX-L and Canadian EX models

Driver's Seat Power Adjustments

See pages 12 — 14 for important safety information and warnings about how to properly position the seats and seat-backs.

The controls for the power adjustable driver's seat are on the outside edge of the seat bottom. You can adjust the seat with the ignition switch in any position. Make all seat adjustments before you start driving.

The front passenger's seat can be adjusted manually (see the next page).

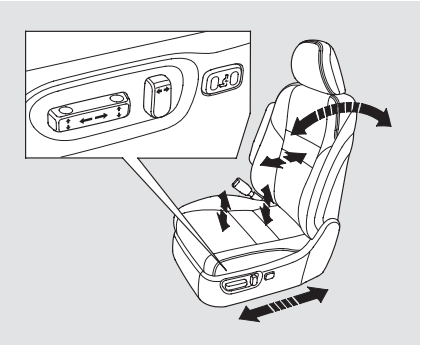

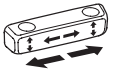

Moves the seat forward and backward.

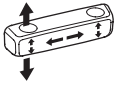

Moves the front of the seat up or down.

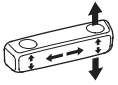

Raises or lowers the seat.

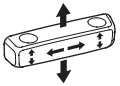

Moves the whole seat up and forward, or down and backward. The front of the seat also tilts up or down at the same time.

Adjusts the seat-back angle forward or backward.

Increases or decreases the lumbar support.

Front Seat Manual Adjustments

See pages 12 — 14 for important safety information and warnings about how to properly position the seats and seat-backs.

Make all seat adjustments before you start driving.

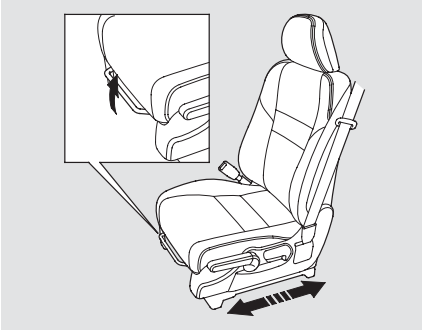

To adjust the seat forward or backward, pull up on the bar under the seat cushion's front edge. Move the seat to the desired position, and release the bar. Try to move the seat to make sure it is locked in position.

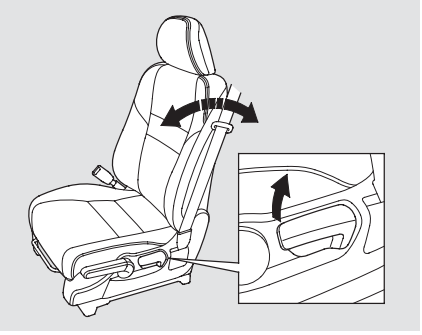

To change the seat-back angle, pull up on the lever on the outside of the seat bottom.

Once a seat is adjusted correctly, rock it back and forth to make sure it is locked in position.

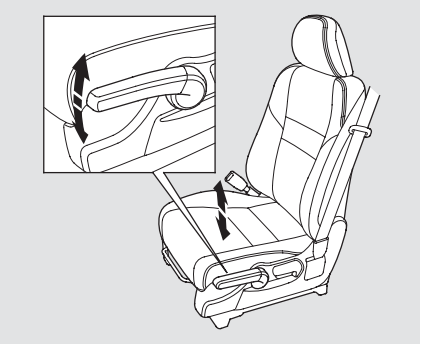

The height of your driver's seat is adjustable. To raise the seat, repeatedly pull up the lever on the outside of the seat cushion. To lower the seat, push the lever down repeatedly.

Rear Seat Adjustments

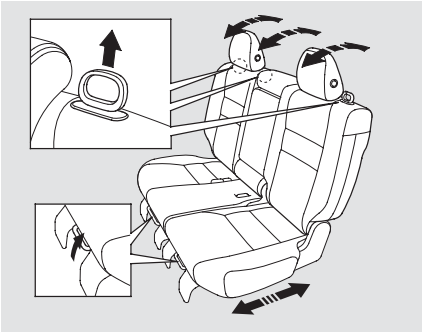

To adjust the seats forward and backward, pull up on the lever under the seat cushion. After moving the seat, make sure it is locked into position.

The angle of each rear seat-back can be adjusted separately. To change the seat-back angle of the rear seat-back, pull up on the release lever on the top of the seat-back. Move the seat-back to the desired position, then release the lever. Make sure the seat-back latches in the new position.

When using the center seating position, adjust the left and right side of the rear seats to the same position.

Make sure all rear shoulder belts are positioned in front of the rear seat-backs after you adjust the rear seats.

Armrests

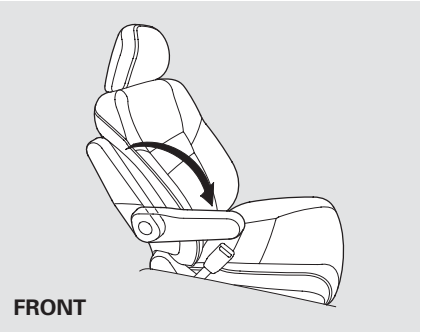

Each front seat has an armrest on the side of the seat-back. To use it, pivot it down.

CONTINUED

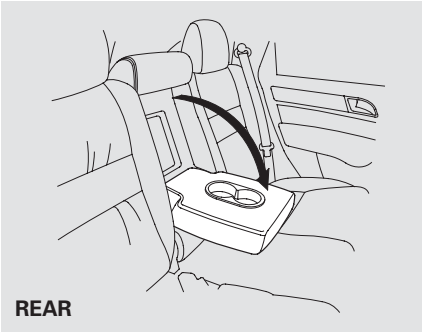

The rear seat armrest is in the center of the rear seat. Pivot it down to use it.

Cargo Pass-through

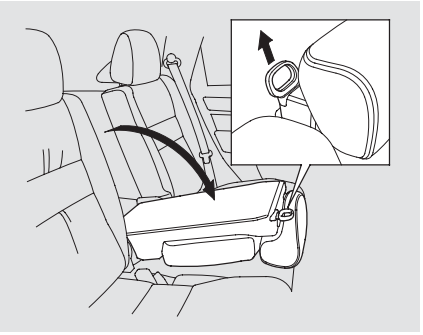

The rear center seat-back has a cargo area pass-through. To use the cargo area pass-through, pull up the release on top of the center seat-back and fold it down.

If your vehicle is equipped with a dual deck cargo shelf, do not use the shelf when any seat-back is folded down. Objects placed on this shelf can be thrown forward and occupants can be injured during sudden stops or a collision.

For more information on the dual deck cargo shelf, see page 117 .

Head Restraints

See page 14 for important safety information and a warning about improperly positioning head restraints.

Your vehicle is equipped with head restraints in all seating positions to help protect you and your passengers from the likelihood of whiplash and other injuries.

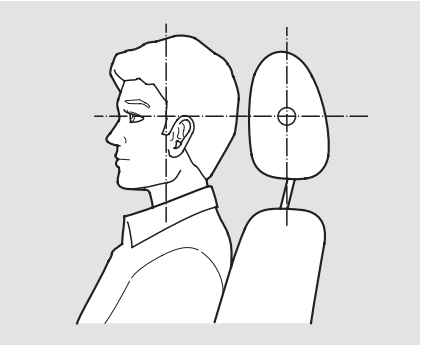

They are most effective when you adjust them so the center of the back of the occupant's head rests against the center of the restraint.

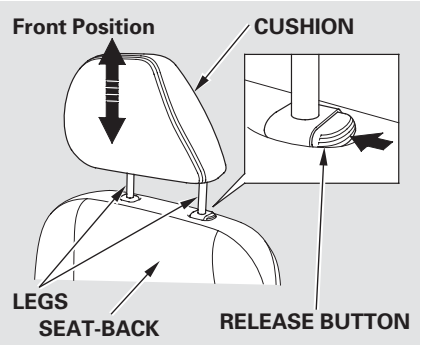

Adjusting the Head Restraint

The head restraints adjust for height. You need both hands to adjust the restraint. Do not attempt to adjust it while driving. To raise a front or rear center head restraint, pull upward. To lower the restraint, push the release button sideways, and push the restraint down.

CONTINUED

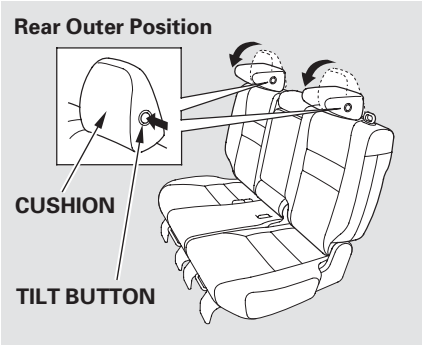

To pivot the outer head restraint down for better visibility, press the tilt button on the side of the head restraint. It folds down forward. To raise the head restraint, pivot it up by hand. Make sure the head restraint locks in position.

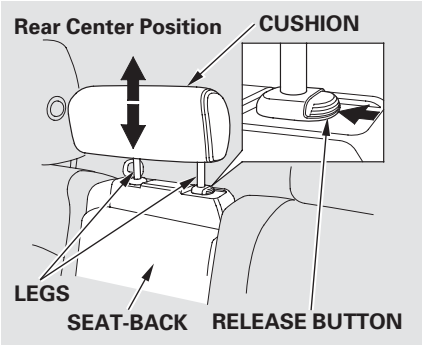

Removing the Head Restraint
To remove a front or rear center head restraint, pull it up as far as it will go. Push the release button, then pull the restraint out of the seat-back.

When a passenger is seated in the rear center seating position, make sure the center head restraint is properly adjusted.

⚠WARNING

Failure to reinstall the head restraints can result in severe injury during a crash.

Always replace the head restraints before driving.

Make sure the removed head restraints are securely stored.

When reinstalling a head restraint, put the legs back in place. Then adjust it to the appropriate height while pressing the release button.

Make sure the head restraint locks in position when you reinstall it.

Active Head Restraints

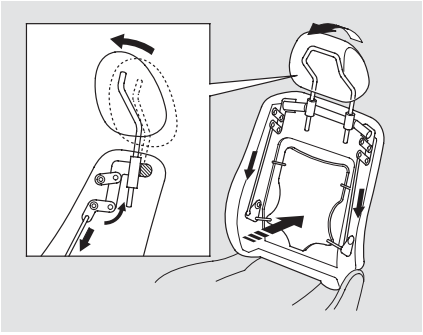

The driver's and front passenger's seats have active head restraints. If the vehicle is struck severely from the rear, the occupant properly secured with the seat belt will be pushed against the seat-back and the head restraint will automatically move forward.

This reduces the distance between the restraint and the occupant's head. It also helps protect the occupants against the likelihood of whiplash and injuries to the neck and upper spine.

After a collision, the activated restraint should return to its normal position.

If the restraints do not return to their normal position, or in the event of a severe collision, have the vehicle inspected by a Honda dealer.

For a head restraint system to work properly:

- Do not hang any items on the head restraints, or from the restraint legs.
- Do not place any object between an occupant and the seat-back.
- Install each restraint in its proper location.
- Only use genuine Honda replacement head restraints.

Reclining the Front Seats

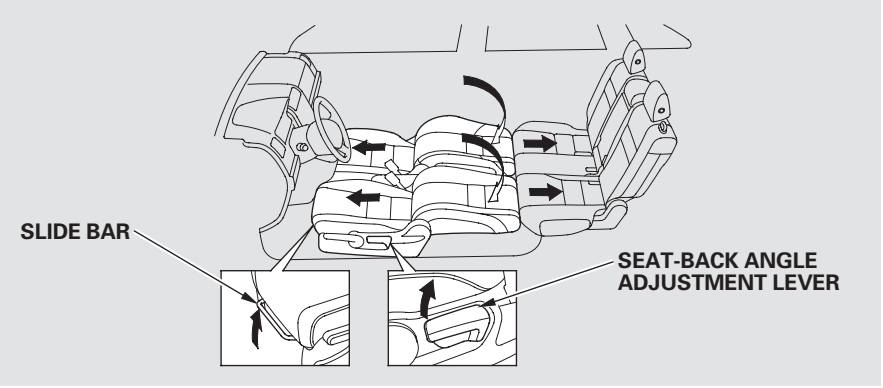

You can recline the seat-backs on the front seats so they are level with the rear seat cushions, making a large cushioned area. To do this:

EX-L and Canadian EX models
Only the passenger's side can be level as follows.

1. Adjust the rear seats as far back as possible.

2. Remove the front head restraints (see page 102), and store them securely.

3. Adjust the front seats forward as far as possible. Pull up the seat-back angle adjustment lever and pivot the seat-back backward until it is level with the rear seat cushion.

   EX-L and Canadian EX models
   The seat-back of the power adjustable driver's seat cannot be level. Do not push the seat-back down forcibly.

4. Adjust the rear seat-back to the desired position.

Reverse this procedure to return the front and rear seats to the upright position. Make sure you install the head restraints and securely lock the seats before driving.

When you return the seat-back to its upright position, hold the seat-back to keep it from going up too quickly.

Folding the Rear Seats Down
Each rear seat-back can be folded down separately to give more cargo room. With either of the outer seat-backs folded-down, you can still carry a passenger in the rear seat. With the center seat-back folded-down, either outer seating position can be used.

You can also fold up the left or right side of the rear seats separately to create further cargo space (see page 107).

Remove any items from the seat before folding down the seat-back.

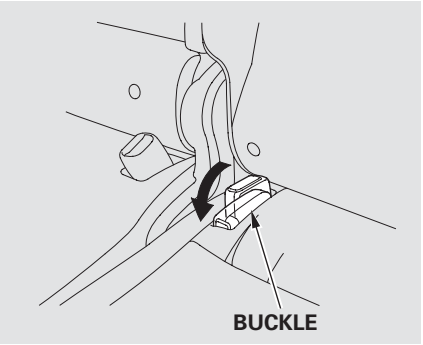

1. Push the seat belt buckles into the seat cushion.

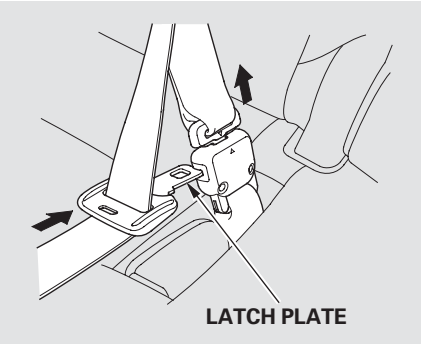

When you are folding the rear center seat-back, use the latch plate to release the center seat belt from the detachable anchor (see page 109). Allow the seat belt to retract into the holder on the ceiling and store the buckles in it.

Make sure the rear seat armrest is stored.

CONTINUED

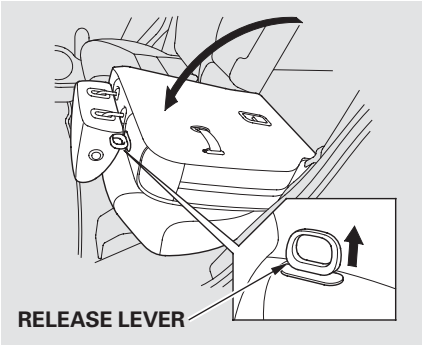

2. Push the button located next to each rear outer head restraint to pivot the head restraint down. Lower the rear center head restraint to its lowest position.

3. Pull up the release lever on the top of the seat-back.

4. Fold the seat-back forward.

Do not put any heavy items on the seat-back when it is folded down.

Reverse this procedure to return the seat-back to the upright position. Make sure the seat is secured and the seat belt is in front of the seat-back before driving.

In the rear center seating position, be sure the detachable anchor is latched securely (see page 109).

Make sure that the folded down rear seat does not interfere with the front passenger's seat-back. This will cause the front passenger's weight sensors and the front passenger's seat belt reminder indicator to work improperly (see page 19). Also check the passenger airbag off indicator to assure proper operation of the passenger's front airbag (see page 33).

When any seat-back is folded down, do not use the dual deck cargo shelf (if equipped).

Make sure all items in the cargo area are secured. Loose items can fly forward and cause injury if you have to brake hard (See **Carrying Cargo** on page 304).

Folding the Rear Seat Forward

The left and right rear seats can be folded up separately to make room for cargo.
Remove any items from the seat before you fold up the seat cushion.
To fold the rear seat forward:

1. Pull up the bar under the seat cushion and slide the rear seat backward. The rear seat will not fold forward unless it is as far back as it will go.
2. Follow steps 1 through 4 on pages 105 and 106 for folding down the seat-back.

Lower the center seat-back before folding the passenger's side seat forward.

CONTINUED

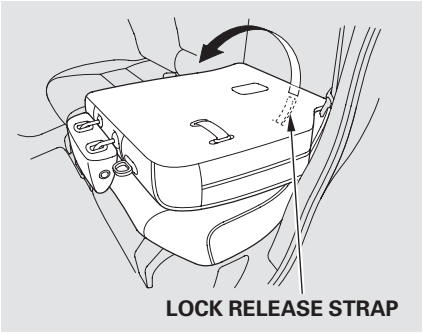

3. Unlock the seat from the floor by pulling the lock release strap located at the rear of the seat cushion, under the seat back, then lift the rear of the seat.
   You cannot fold up the rear seat if it is not latched securely in the rearmost position.

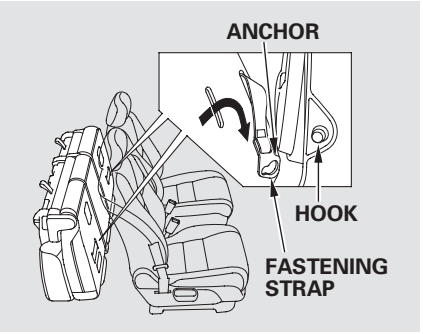

4. Pull out the fastening strap from the slit on the seat-back. Then attach the anchor on the fastening strap to the hook on the center pillar.

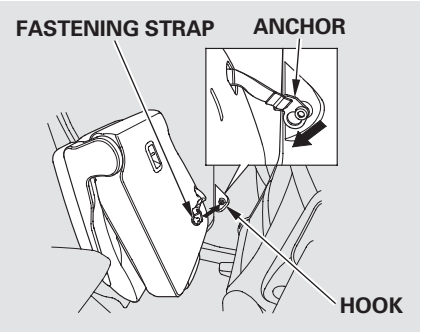

5. Pull down on the anchor to engage the upper part of the anchor securely on the hook, and make sure the seat is secure.

Make sure that the folded up right rear seat does not interfere with the front passenger's seat-back. This will cause the front passenger's weight sensors and the front passenger's seat belt reminder indicator to work improperly (see page 33). Also check the passenger airbag off indicator to assure proper operation of the passenger's advanced front airbag.

Reverse this procedure to return the seat to the upright position.
Make sure the seat is securely latched before driving.
When you are not using the fastening strap, store the strap into the slit on the seat-back.

Make sure both outer seat belts are positioned in side of the rear seat-backs.

In the center seating position of the rear seat, be sure the detachable anchor is latched securely before using the seat belt (see next column).

Make sure all items in the cargo area are secured. Loose items can fly forward and cause injury if you have to brake hard (See **Carrying Cargo** on page 304).

Do not use the dual deck cargo shelf (if equipped) when the seats are folded down or forward.

Detachable Anchor
The seat belt in the rear center seat is equipped with a detachable anchor.

This allows the center seat belt to be unlatched when the rear center seat back is folded down or the right side rear seat is folded forward.

⚠WARNING

Using the seat belt with the detachable anchor unlatched increases the chance of serious injury or death in a crash.

Before using the seat belt, make sure the detachable anchor is correctly latched.

CONTINUED

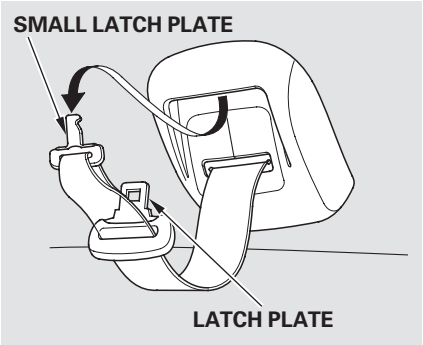

Pull out the small latch plate and the latch plate from each holding slot in the ceiling, and pull out the seat belt to extend it.

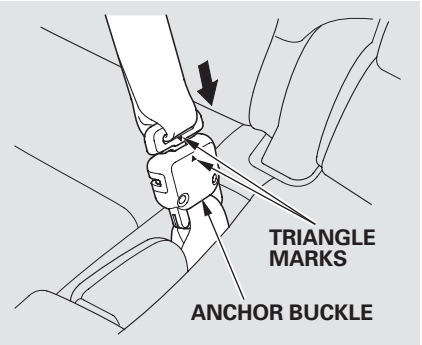

Line up the triangle marks on the small latch plate and anchor buckle when reattaching the belt and buckle.

Tug on the seat belt to verify that the detachable anchor is securely latched. Make sure the seat belt is not twisted.

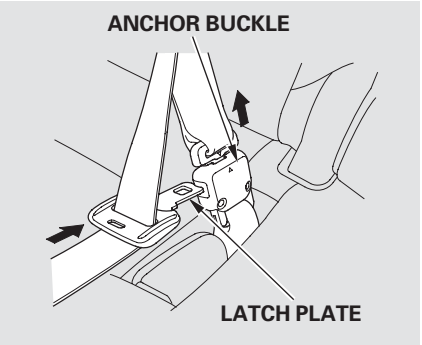

To unlatch the detachable anchor, insert the latch plate into the slot on the side of the anchor buckle. Store the detachable anchor and seat belt latch plates in the retractor housing.

Seat Heaters

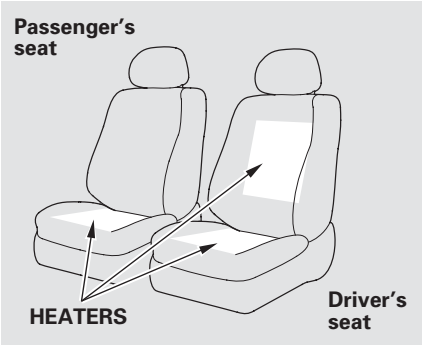

If equipped
Both front seats are equipped with seat heaters. The passenger seat only has heaters in the seat bottom because of the side airbag cutoff system.

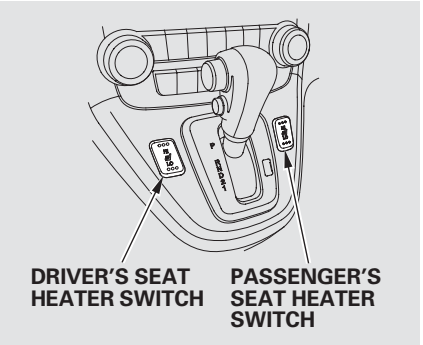

The ignition switch must be in the ON (II) position to use the heaters. Push the top of the switch, HI, to rapidly heat up the seat. After the seat reaches a comfortable temperature, select LO by pushing the bottom of the switch. This will keep the seat warm.

In the HI setting, the heater turns off when the seat gets warm, and turns back on after the seat's temperature drops.

In the LO setting, the heater runs continuously. It does not cycle with temperature changes.

Follow these precautions when using the seat heaters:

- Use the HI setting only to heat the seats quickly, because it draws large amounts of current from the battery.
- If the engine is left idling for an extended period, do not use the seat heaters, even on the LO setting. It can weaken the battery, causing hard starting.

Power Windows

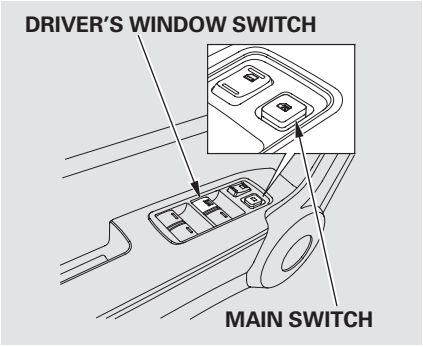

Turn the ignition switch to the ON (II) position to raise or lower any window. To open the window, push the switch down and hold it. Release the switch when you want to stop the window. To close the window, pull back on the switch and hold it.

The windows will operate for up to 10 minutes after you turn off the ignition switch. Opening either front door cancels this function.

⚠ WARNING

Closing a power window on someone's hands or fingers can cause serious injury.

Make sure your passengers are away from the windows before closing them.

AUTO — To open or close the driver's window, push or pull the window switch firmly down or up to the second detent, and release it. The window will automatically go up or down all the way. To stop the window, pull or push the window switch briefly.

When you push the MAIN switch in, the switch is off, and the passenger windows cannot be raised or lowered. To cancel this feature, push on the switch again to get it to pop out. Keep the MAIN switch off when you have children in the vehicle so they do not injure themselves by operating the windows unintentionally.

AUTO REVERSE — If the driver's window senses any obstacle while it is closing automatically, it will reverse direction, and then stop. To close the window, remove the obstacle, then use the window switch again.

Auto reverse stops sensing when the window is almost closed. You should always check that all passengers and objects are away from the window before closing it.

NOTE: The driver's window auto reverse function is disabled when you continuously pull up the switch.

Moonroof

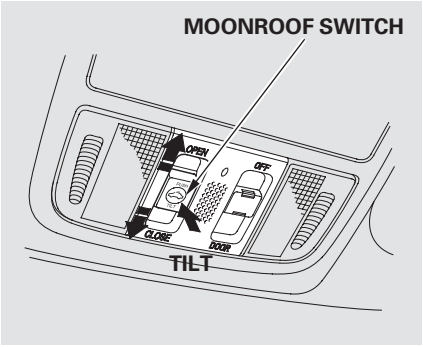

If equipped
The moonroof can be tilted up in the back for ventilation, or it can be slid back into the roof. Use the switch on the front ceiling to operate the moonroof. You must turn the ignition switch to the ON (II) position to operate the moonroof.

To tilt up the moonroof, push on the center of the moonroof switch. To stop the moonroof from tilting up fully, push the switch briefly.

To open the moonroof, pull back on the switch and hold it. Release the switch when the moonroof reaches the desired position. To close the moonroof, push the switch forward and hold it. Release the switch to stop the operation.

⚠ WARNING

Opening or closing the moonroof on someone's hands or fingers can cause serious injury.

Make sure all hands and fingers are clear of the moonroof before opening or closing it.

AUTO — To open the moonroof fully, pull back the moonroof switch firmly, then release it. The moonroof automatically opens all the way. To stop the moonroof from opening, push the switch briefly.

To close the moonroof fully, firmly push the moonroof switch forward, then release it. The moonroof automatically closes all the way. To stop the moonroof from closing, push the switch briefly.

To open or close the moonroof partially, lightly pull the switch back or push it forward and hold it. The moonroof will stop when you release the switch.

CONTINUED

Moonroof, Mirrors

AUTO REVERSE — If the moonroof runs into any obstacle while it is closing automatically, it will reverse direction and then stop. To close the moonroof, remove the obstacle, then use the moonroof switch again.

Auto reverse stops sensing when the moonroof is almost closed. You should always check that all passengers and objects are away from the moonroof before closing it.

The moonroof has a key-off delay. You can open and close the moonroof for up to 10 minutes after you turn off the ignition switch. The key-off delay cancels as soon as you open either front door. You must then turn the ignition switch to the ON (II) position for the moonroof to operate.

NOTICE

If you try to open the moonroof in below-freezing temperatures, or when it is covered with snow or ice, you can damage the moonroof panel or its motor.

Mirrors

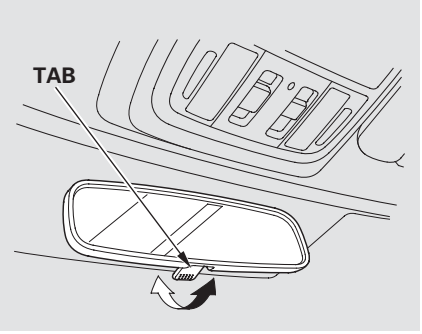

Keep the inside and outside mirrors clean and adjusted for best visibility. Be sure to adjust the mirrors before you start driving.

The inside mirror has day and night positions. The night position reduces glare from headlights behind you. Flip the tab on the bottom edge of the mirror to select the day or night position.

Adjusting the Power Mirrors

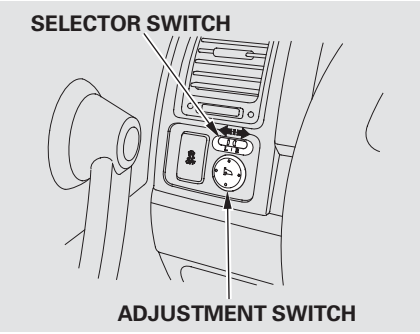

1. Turn the ignition switch to the ON (II) position.

2. Move the selector switch to L (driver's side) or R (passenger's side).

3. Push the appropriate edge of the adjustment switch to move the mirror right, left, up, or down.

4. When you finish, move the selector switch to the center (off) position. This turns the adjustment switch off to keep your settings.

Power Mirror Heaters

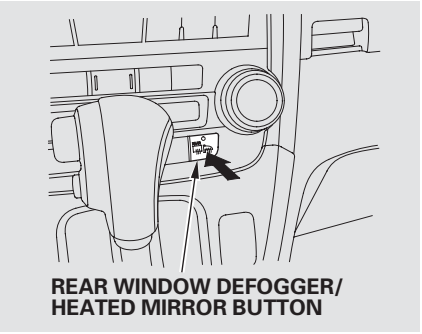

If equipped
The outside mirrors are heated to remove fog and frost. With the ignition switch in the ON (II) position, turn on the heaters by pressing the button. The indicator in the button comes on as a reminder. Press the button again to turn the heaters off. Pressing this button also turns the rear window defogger on and off.

Interior Convenience Items

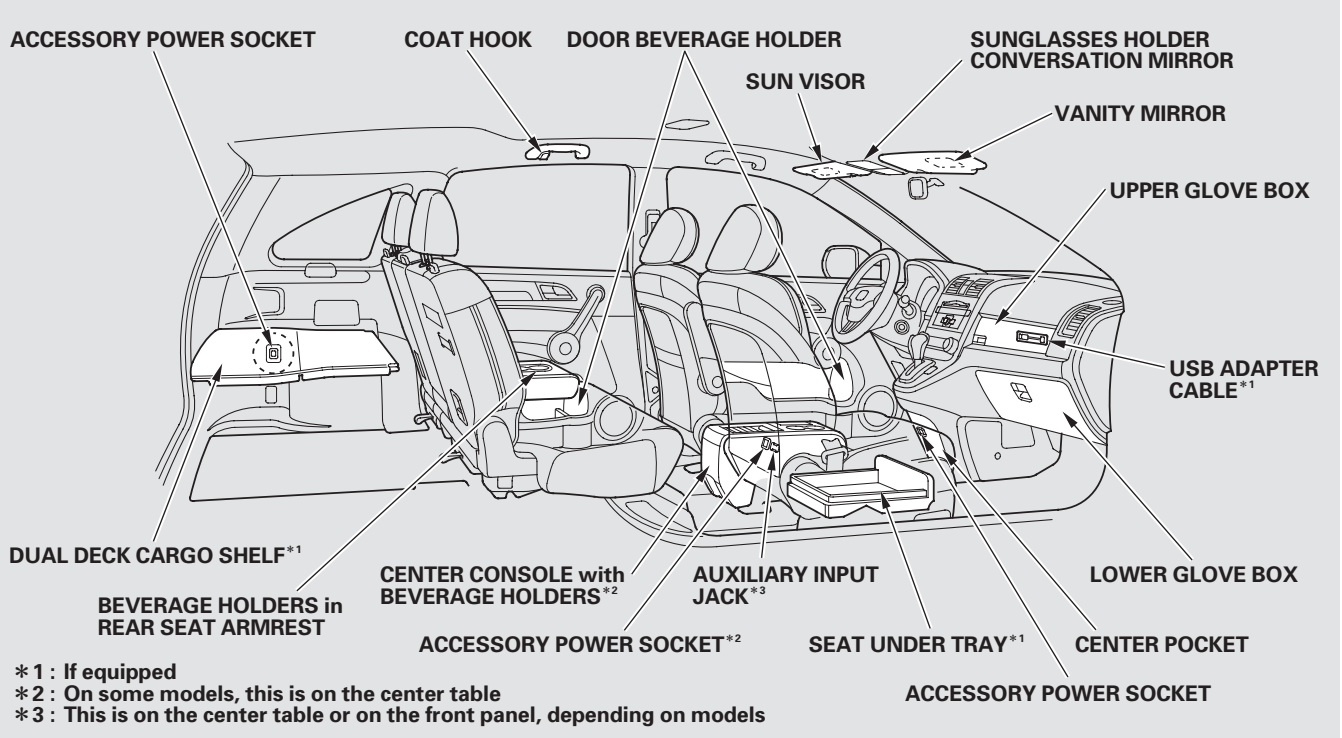

*1 : If equipped
*2 : On some models, this is on the center table
*3 : This is on the center table or on the front panel, depending on models

Dual Deck Cargo Shelf

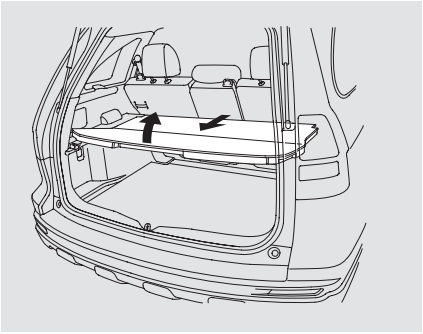

If equipped
The dual deck cargo shelf will separate the storage area into two storage areas. On the upper area, you can store small and light items. You should place heavy items in the lower storage area. You can remove the dual deck cargo shelf and store it on the cargo area floor to make a larger cargo area.

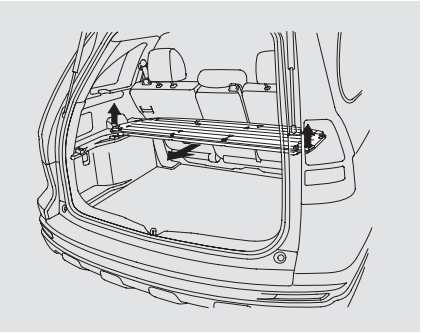

Make sure to use the dual deck cargo shelf fully opened and securely latched.

To remove the dual deck cargo shelf, fold up the rear half of the shelf forward onto the front half, push up on both sides, then pull it toward you.

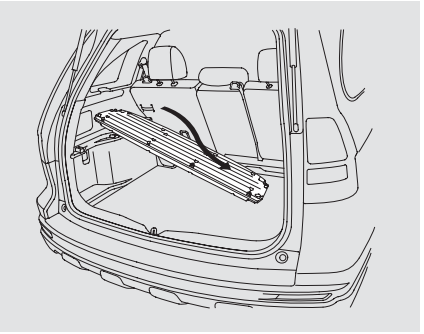

To store the dual deck cargo shelf, lift up either side of it, then move it as shown above.

Place the dual deck cargo shelf on the far side of the cargo floor, then slide it forward while folding out the upper half of the shelf.

CONTINUED

Interior Convenience Items

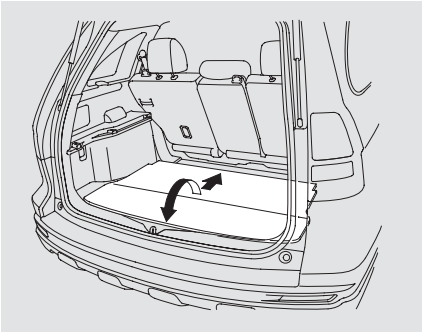

The dual deck cargo shelf can be placed on the floor as shown above.

Reverse this procedure to return the dual deck cargo shelf to the upper position. Make sure the dual deck cargo shelf is latched securely.

⚠ WARNING

Do not use this shelf if the second row seats are folded down.

Objects placed on the shelf could be thrown forward during a crash or sudden stop and hurt someone.

When any of the rear seats are folded down or forward, do not place any objects on the dual deck cargo shelf. Make sure to store the shelf on the cargo area floor. It could be unlatched during a crash.

The maximum load on the dual deck cargo shelf is 20 lbs on U.S. models, and 10 kg on Canadian models. This is shown on a label on the driver's side of the dual deck cargo shelf (see page 57). To prevent damage to the dual deck cargo shelf, do not exceed the maximum load.

Make sure all items in the cargo area are secured. Loose items can fly forward and cause injury if you have to brake hard (See **Carrying Cargo** on page 304).

NOTICE

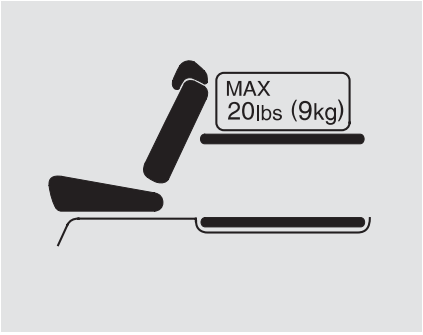

On U.S. models
To prevent damage, do not place more than 20 lbs (9 kg) on this shelf.

On Canadian models
To prevent damage, do not place more than 10 kg on this shelf.

Beverage Holders
Be careful when you are using the beverage holders. A spilled liquid that is very hot can scald you or your passengers. Liquid can also spill from the door pocket beverage holders when you open or close the doors. Use only resealable containers in the door pockets.

Spilled liquids can damage the upholstery, carpeting, and electrical components in the interior.

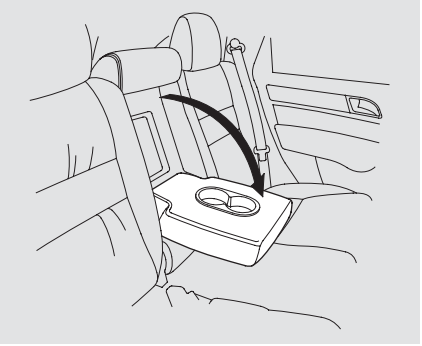

On vehicles with rear seat armrest
The rear seat also has a beverage holder in the center armrest. To use it, pivot the armrest down.

Interior Convenience Items

Center Table

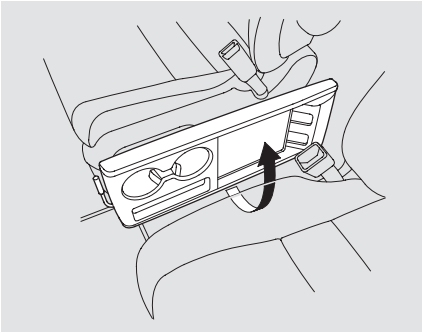

On LX and U.S. EX models
To use the center table, pull up the outside edge of the table until it latches. To store it, pull the lever and lower the table.

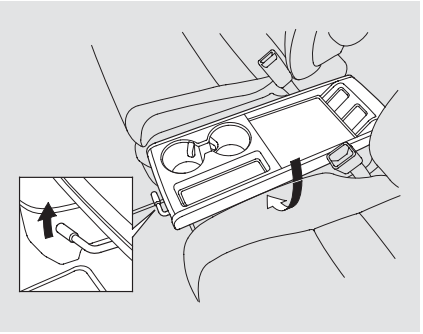

Sitting on or getting under the table, or putting heavy objects on the table, may damage or deform it.

Do not put any items on the table while driving. They may fall down or fly around when you go around corners or brake hard.

Lower Glove Box

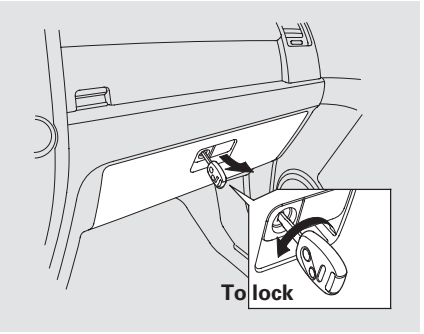

Open the lower glove box by pulling the bottom of the handle. Close it with a firm push. Lock or unlock the glove box with the master key.

⚠ WARNING

An open glove box can cause serious injury to your passenger in a crash, even if the passenger is wearing the seat belt.

Always keep the glove box closed while driving.

Upper Glove Box

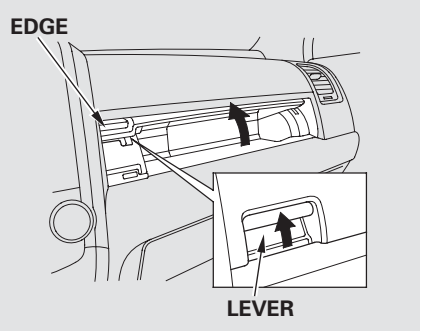

Open the upper glove box by pushing up the lever. Close it by pulling down on the edge under the lever.

Vanity Mirror

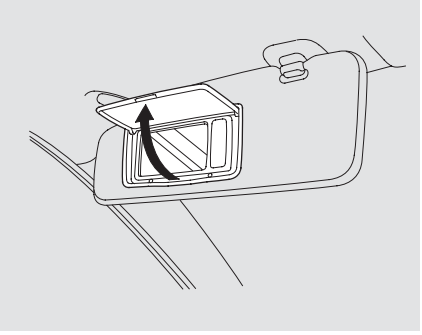

To use the vanity mirror on the back of the sun visor, pull up the cover.

Except LX model
The vanity mirror lights come on when you pull up the cover.

Interior Convenience Items

Sun Visor

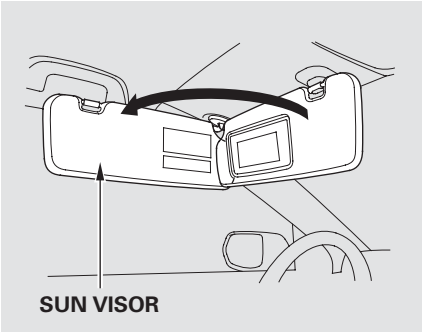

To use the sun visor, pull it down. When using the sun visor for the side window, remove the support rod from the clip, and swing it out.

Make sure you put the sun visor back in place when you are getting into or out of the vehicle.

Sunglasses Holder

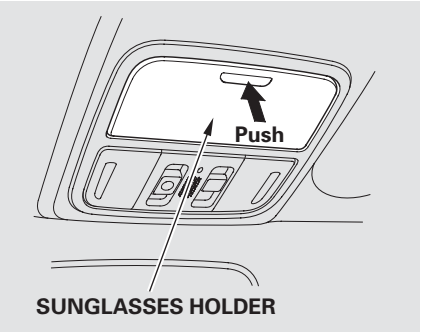

To open the sunglasses holder, push then release the raised detent. It will unlatch and swing down. To close it, push it until it latches. Make sure the holder is closed while you are driving.

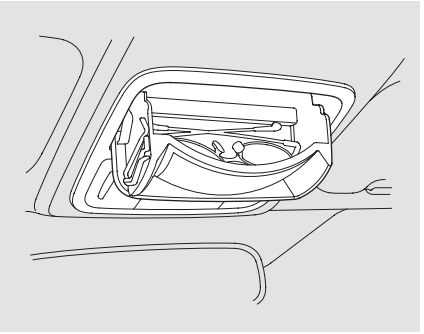

Some larger styles of sunglasses may not fit in the holder.

You may also store small items in this holder. Make sure they are small enough to let the holder close and latch, and that they are not heavy enough to cause the holder to pop open while driving.

Conversation Mirror

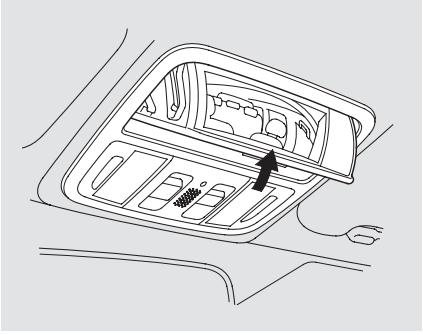

The sunglasses holder uses a convex mirror for its bottom panel. You can see all the vehicle passengers in this mirror. To use the mirror, open the sunglasses holder fully, push it to the first detent, and release it.

To switch back to the sunglasses holder, close the conversation mirror and then open the sunglasses holder.

Accessory Power Sockets

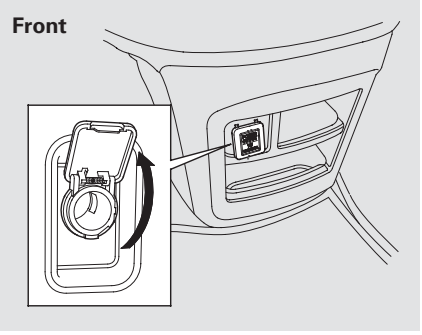

Your vehicle has two or three accessory power sockets depending on the model.

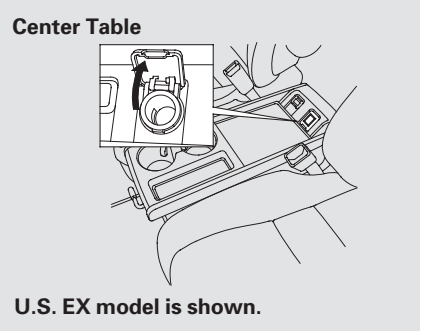

To use an accessory power socket, the ignition switch must be in the ACCESSORY (I) or ON (II) position.

Each socket is intended to supply power for 12 volt DC accessories that are rated 120 watts or less (10 amps).

CONTINUED

Interior Convenience Items

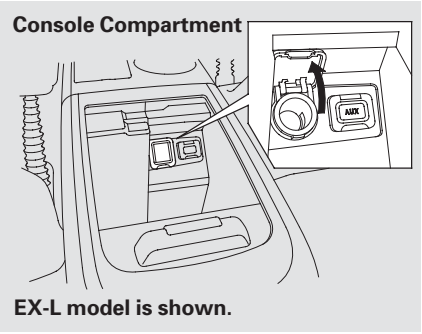

None of the sockets will power an automotive type cigarette lighter element.

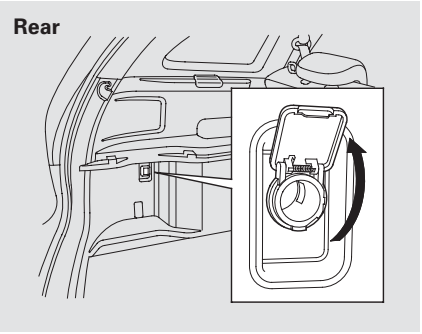

Make sure to put the socket cover back in place to prevent any small foreign objects from getting into the socket.

Console Compartment

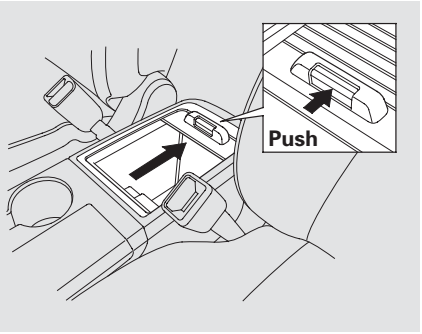

EX-L and Canadian EX models
Push the release knob and slide the lid rearward to open.

Interior Convenience Item

Coat Hook

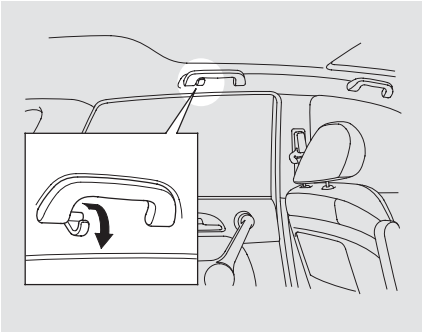

To use a coat hook, slide it out slightly, then pull it down.

Make sure the coat hook is folded up when you are not using it. This hook is not designed for large or heavy items.

Seat Under Tray

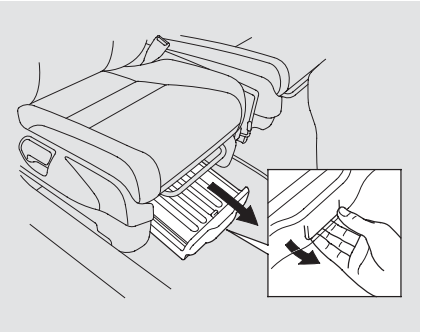

If equipped
Your vehicle has a seat under tray located under the front passenger seat. Use the tray by pulling on the front center edge of the tray.

Interior Lights

Ceiling Light

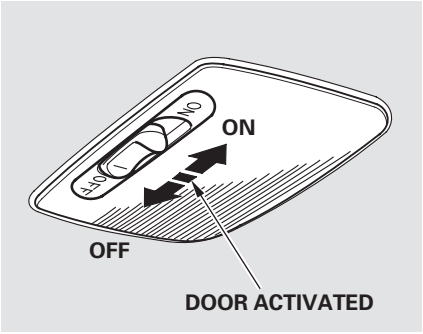

The ceiling light has a three-position switch: ON, Door Activated, and OFF. In the Door Activated (center) position, the light comes on when you:

- Open any door.
- Unlock the doors and the tailgate with the key or remote transmitter.

After all doors and the tailgate are closed tightly, the light fades out in about 30 seconds.

The ceiling light (with the switch in the center position) comes on when you remove the key from the ignition switch. If you do not open a door and the tailgate, the light fades out in about 30 seconds.

If you leave any door or the tailgate open without the key in the ignition switch, the ceiling light goes off after 3 minutes.

Spotlights

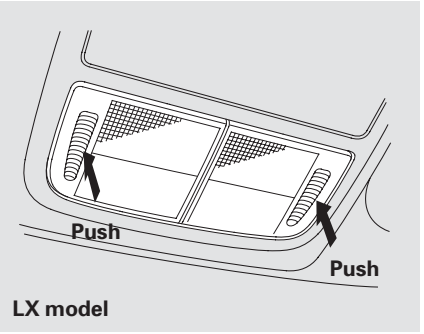

All models
Turn on the spotlight by pushing the lens. Push the lens again to turn it off. You can use the spotlights at all times.

Except LX model
The spotlights have a two-position switch. In the DOOR position, the lights come on when you open any door. In the OFF position, the lights do not come on.

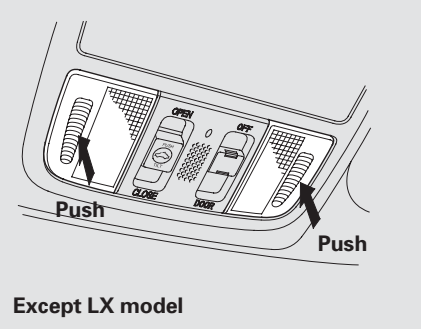

Except LX model

The spotlights (with the switch in the DOOR position) also come on when you unlock the door with the key or the remote transmitter, and when you remove the key from the ignition switch.

Ignition Switch Light

The ignition switch light comes on when you open the driver's door. It fades out in about 30 seconds after the door is closed.

Cargo Area Light

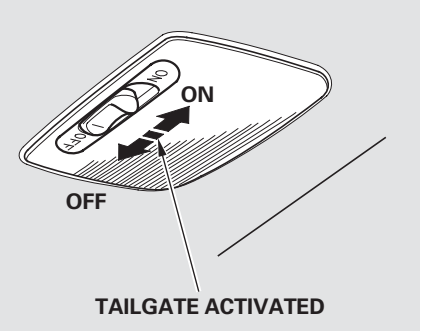

The cargo area light has a three-position switch. In the OFF position, the light does not come on. In the center position, it comes on when you open the tailgate. In the ON position, it stays on continuously.

Features

The heating and air conditioning system in your vehicle provides a comfortable driving environment in all weather conditions.

The standard audio system has many features. This section describes those features and how to use them.

Your vehicle has an anti-theft audio system that requires a code number to enable it.

Except LX model
The security system helps to discourage vandalism and theft of your vehicle.

Vents, Heating, and A/C 130
Climate Control System..... 135
Dual Temperature Control..... 140
Climate Control Sensors..... 142
Audio System 143

LX model
Playing the AM/FM Radio..... 145
Playing a Disc..... 149
Disc Player Error Messages 156

EX and EX-L models without navigation system
Playing the FM/AM Radio..... 157
Playing the XM® Radio 161
Playing Discs..... 166
Disc Changer Error Messages 176

Canadian EX model and EX-L model without navigation system
Playing an iPod®..... 177
iPod® Error Messages 183
Playing a USB Flash Memory Device 184
USB Flash Memory Device Error Messages..... 193

EX-L model with navigation system
Playing the AM/FM Radio..... 194
Playing the XM® Radio 200
Playing a Disc..... 206
Disc Player Error Messages 214

CD Changer..... 215
CD Changer Error Messages 221
Playing a PC card..... 222
PC card Error Messages 234
Playing an iPod®..... 235
iPod® Error Messages 241
Playing a USB Flash Memory Device 242
USB Flash Memory Device Error Messages..... 249
AM/FM Radio Reception..... 250
Protecting Your Discs..... 252
Remote Audio Controls..... 255
Playing an Optional Audio Unit.... 257
Radio Theft Protection..... 258
Setting the Clock 259
Compass..... 260
Security System 264
Rearview Camera and Monitor.... 265
Cruise Control..... 266
Bluetooth® HandsFreeLink® 269

Vents, Heating, and A/C

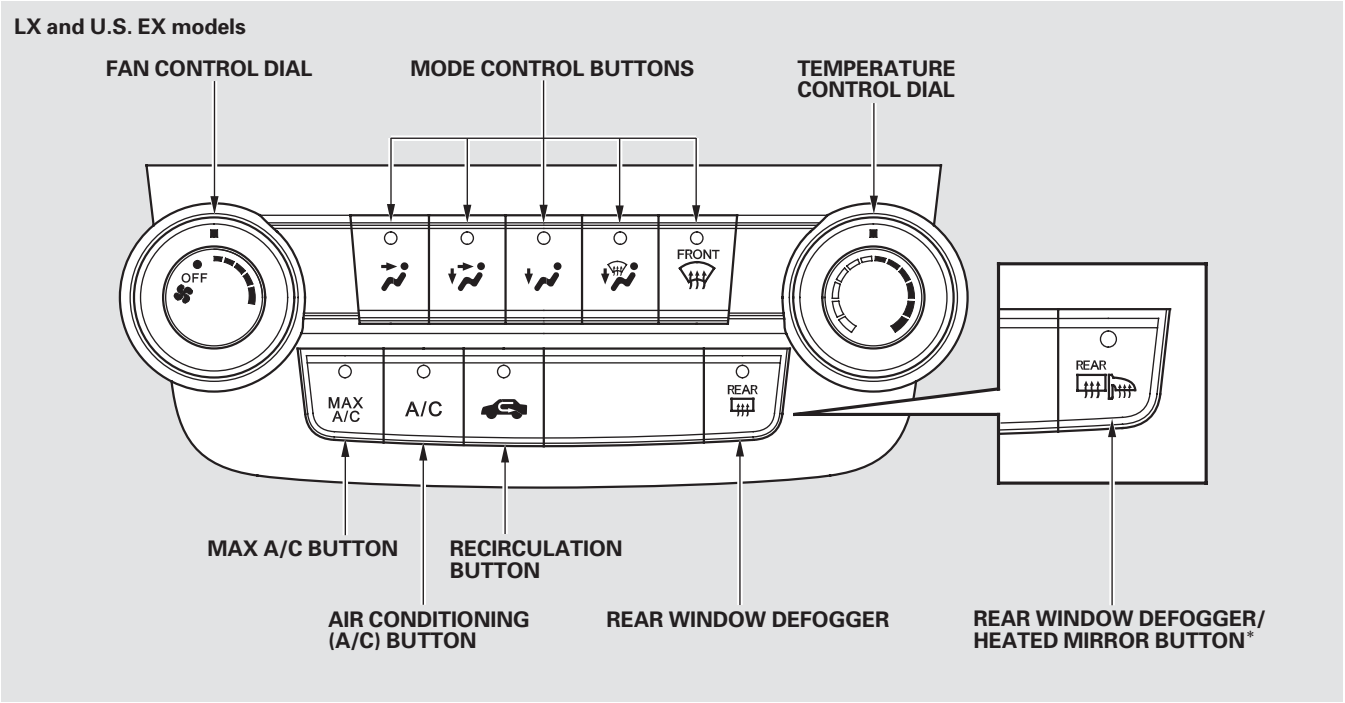

* : Canadian models

Fan Control Dial
Turn this dial to increase or decrease the fan speed and airflow.

Temperature Control Dial
Turning this dial clockwise increases the temperature of the airflow.

Air Conditioning (A/C) Button
This button turns the air conditioning on and off. The indicator in the button is on when the A/C is on.

MAX A/C Button
MAX A/C The system automatically turns on the A/C and switches to recirculation mode (see page 133 to use this setting). Air flows from the center and side vents in the dashboard. Pressing the , A/C, or any of the mode buttons cancels MAX A/C, but the A/C stays on.

Recirculation Button
When the recirculation indicator is on, air from the vehicle's interior is sent throughout the system again. When the indicator is off, air is brought in from the outside of the vehicle (fresh air mode).

The outside air intakes for the heating and cooling system are at the base of the windshield. Keep this area clear of leaves and other debris.

The system should be left in fresh air mode under almost all conditions. Keeping the system in recirculation mode, particularly with the A/C off, can cause the windows to fog up.

Switch to recirculation mode when driving through dusty or smoky conditions, then return to fresh air mode.

**Rear Window Defogger Button / **
This button turns the rear window defogger off and on (see page 80).

Canadian models only
Pushing this button also turns the power mirror heaters on and off.

Mode Control
Use the mode control buttons to select the vents air flows from. Some air will flow from the dashboard corner vents in all modes.

Air flows from the center and corner vents in the dashboard.

Airflow is divided between the vents in the dashboard and the floor vents.

CONTINUED

Vents, Heating, and A/C

Air flows from the floor vents.

When you select , the system automatically switches to fresh air mode. If you switch the mode from or to , the system keeps the A/C on. The A/C indicator will not come on if it was off to start with.

To turn off the A/C, press the A/C button to illuminate the indicator, then press it again to turn off the A/C.

When you switch to or mode from , the A/C turns off. But if it was on to start with, the A/C stays on.

Airflow is divided between the floor vents and defroster vents at the base of the windshield.

Air flows from the defroster vents at the base of the windshield.

When you select or , the system automatically switches to fresh air mode and turns on the A/C. You cannot turn the A/C off in this mode.

Ventilation
The flow-through ventilation system draws in outside air, circulates it through the interior, then discharges it through vents near the tailgate.

1. Set the temperature to the lower limit.
2. Make sure the A/C is off.
3. Select and fresh air mode.
4. Set the fan to the desired speed.

Using the Heater
The heater uses engine coolant to warm the air. If the engine is cold, it will be several minutes before you feel warm air coming from the system.

1. Select .
   When you select , the system automatically switches to fresh air mode. If you switch the mode from or , the system also automatically turns on the A/C. This helps prevent the windows from fogging up unintendedly. The A/C indicator will not come on if it was off to start with (see the first column on this page).
2. Set the fan to the desired speed.
3. Adjust the warmth of the air with the temperature control dial.

Using the A/C
Air conditioning places an extra load on the engine. Watch the engine coolant temperature gauge (see page 71). If it moves near the red zone, turn off the A/C until the gauge reading returns to normal.

1. Turn on the A/C by pressing the button. The indicator in the button comes on when a fan speed is selected.
2. Make sure the temperature is set to maximum cool.
3. Select .
4. If the outside air is humid, select recirculation mode. If the outside air is dry, select fresh air mode.
5. Set the fan to the desired speed.

If the interior is very warm, you can cool it down more rapidly by partially opening the windows, turning on the air conditioning, and setting the fan to maximum speed in fresh air mode.

To cool the interior with MAX A/C:
1. Set the fan to the desired speed.
2. Select MAX A/C.
   The system automatically turns on the A/C, selects , and switches to recirculation mode.
3. Make sure the temperature is set to maximum cool.

Dehumidify the Interior
Air conditioning, as it cools, removes moisture from the air. When used in combination with the heater, it makes the interior warm and dry and can prevent the windows from fogging up.

1. Turn the fan on.
2. Turn on the air conditioning.
3. Select and fresh air mode.
4. Adjust the temperature to your preference.

This setting is suitable for all driving conditions whenever the outside temperature is above 32°F (0°C).

Vents, Heating, and A/C

To Defog and Defrost

To remove fog from the inside of the windows:

1. Set the fan to the desired speed, or high for faster defrosting.
2. Select . The system automatically switches to fresh air mode and turns on the A/C. The A/C indicator will not come on if it was off to start with.
3. Adjust the temperature so the airflow feels warm.
4. Select / to help clear the rear window.
5. To increase airflow to the windshield, close the corner vents.

When you switch to , from or , the A/C stays on. This helps prevent the windows from rapidly fogging up when the air is suddenly routed away from the windshield. If you want to turn the A/C off, press and release the A/C button twice. The indicator in the button comes on and then goes off.

To Remove Exterior Frost or Ice From the Windows

1. Select . The system automatically switches to fresh air mode and turns on the A/C. The A/C indicator does not come on if it was off to start with.
2. Select .
3. Set the fan and temperature controls to maximum level.

To clear the windows faster, you can close the dashboard corner vents by rotating the wheel below each vent. This sends more warm air to the windshield defroster vents. Once the windshield is clear, select fresh air mode to avoid fogging the windows.

For your safety, make sure you have a clear view through all the windows before driving.

To Turn Everything Off

Turning the fan speed control dial all the way to the left shuts the system off.

- Keep the system off for short periods only.
- To keep stale air and mustiness from collecting, you should have the fan running at all times.

EX-L and Canadian EX models

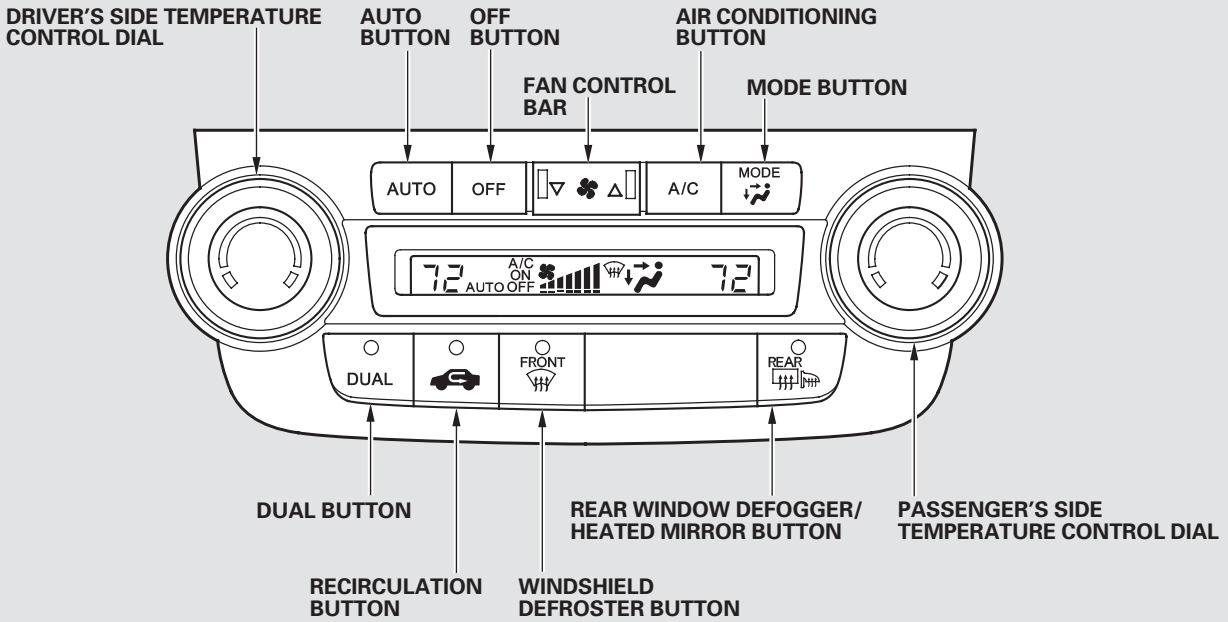

U.S. model is shown.

Climate Control System

Voice Control System

On vehicles with navigation system

The climate control system for your vehicle can also be operated using the voice control system. See the navigation system manual for complete details.

Using Automatic Climate Control

The automatic climate control system in your vehicle maintains the interior temperature you select. The system also adjusts the fan speed and airflow levels.

1. Press the AUTO button.

2. Set the desired temperature by turning the driver's side temperature control dial. You will see AUTO and the selected temperature in the display. You can also set the passenger's side temperature by turning the passenger's side dial.

The system automatically selects the proper mix of conditioned and/or heated air that will, as quickly as possible, raise or lower the interior temperature to your preference.

Temperature Control

The driver's side temperature and the passenger's side temperature can be set separately. Turn the dial of the appropriate temperature control clockwise to increase the temperature of airflow. Turn the dial counterclockwise to decrease it. Each set temperature is shown in the display.

When you set the temperature to its lower limit (Lo) or its upper limit (Hi), the system runs at full cooling or heating only. It does not regulate the interior temperature.

When the indicator in the dual button is on, the driver's side and passenger's side temperature can be controlled independently (see page 140).

Dual Button
You can set the temperatures for the driver's side and the passenger's side separately when this button is pressed (indicator is on). When the indicator in the DUAL button is off, the temperatures for both sides are synchronized to the driver's side set temperature. When defrost mode is selected, dual mode operation is canceled.

To Turn Everything Off
If you press the OFF button, the climate control system shuts off completely.

- Keep the system completely off for short periods only.
- To keep stale air and mustiness from collecting, you should have the fan running at all times.

Semi-automatic Operation
You can manually select various functions of the climate control system when it is in fully automatic mode. All other features remain automatically controlled. Making any manual selection causes the word AUTO in the display to go out.

Fan Control
Select the fan speed by pressing either side of the fan speed control bar (▲ or ▼). The fan speed is shown in vertical bars on the display.

Air Conditioning (A/C) Button
This button turns the air conditioning on and off. You will see A/C ON or A/C OFF in the display.

When you turn the A/C off, the system cannot regulate the inside temperature if you set the temperature control dial below the outside temperature.

CONTINUED

Climate Control System

Recirculation Button
When the indicator in the button is on, air from the vehicle's interior is sent through the system again. When the indicator is off, air is brought in from the outside of the vehicle (fresh air mode).

The outside air intakes for the climate control system are at the base of the windshield. Keep this area clear of leaves and other debris.

The system should be left in fresh air mode under almost all conditions. Keeping the system in recirculation mode, particularly with the A/C off, can cause the windows to fog up.

Switch to recirculation mode when driving through dusty or smoky conditions, then return to fresh air mode.

Rear Window Defogger Button
This button turns the rear window defogger off and on (see page 80).

Pushing this button also turns the power mirror heaters on and off.

Mode Control
Use the mode control button to select the vents the air flows from. Some air will flow from the dashboard vents in all modes.

Air flows from the center and corner vents in the dashboard.

Airflow is divided between the vents in the dashboard and the floor vents.

Air flows from the floor vents.

Airflow is divided between the floor and corner vents and the defroster vents at the base of the windshield.

Windshield Defroster Button

This button directs the main airflow to the windshield for faster defrosting. It also overrides any mode selection you may have made.

When you select , the system automatically switches to fresh air mode and turns on the A/C. For faster defrosting, manually set the fan speed to high. You can also increase airflow to the windshield by closing the corner vents on the dashboard. To close the vents, rotate the wheel under each corner vent.

When you turn off by pressing the button again, the system returns to its former settings.

1. Select . The system automatically switches to fresh air mode and turns on the A/C.
2. Adjust the temperature with the driver's side temperature control so the airflow feels warm.
3. Select to help clear the rear window.
4. To increase airflow to the windshield, close the corner vents. For faster defogging, manually set the fan speed to high.

For your safety, make sure you have a clear view through all the windows before driving.

Dual Temperature Control

EX-L and Canadian EX models
The temperatures of the driver's side and the front passenger's side can be controlled independently when the indicator in the DUAL button is on.

To adjust the driver's side, turn the driver's side temperature control dial on the climate control panel. To adjust the passenger's side, turn the passenger's side temperature control dial.

Temperature Control
Push AUTO or . The selected temperatures appear in the display. When the indicator in the DUAL button is off, you can adjust both sides to the same temperature by adjusting the driver's temperature control dial.

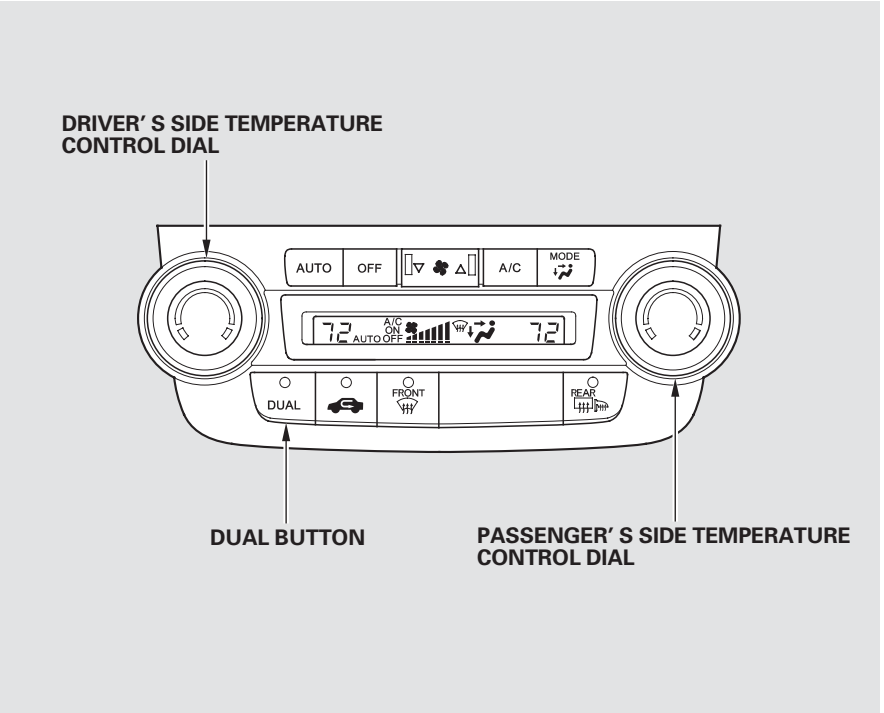

Dual Temperature Control

To set the driver's side temperature to a different value than the passenger's side, press the DUAL button, then turn the temperature control dial on the control panel. To set the passenger's side to a different value than the driver's side, turn the passenger's side temperature control dial. You can adjust the passenger's side without pressing the DUAL button first.

When you set the temperature to its lower limit or its upper limit, it will be displayed as "Lo" or "Hi".

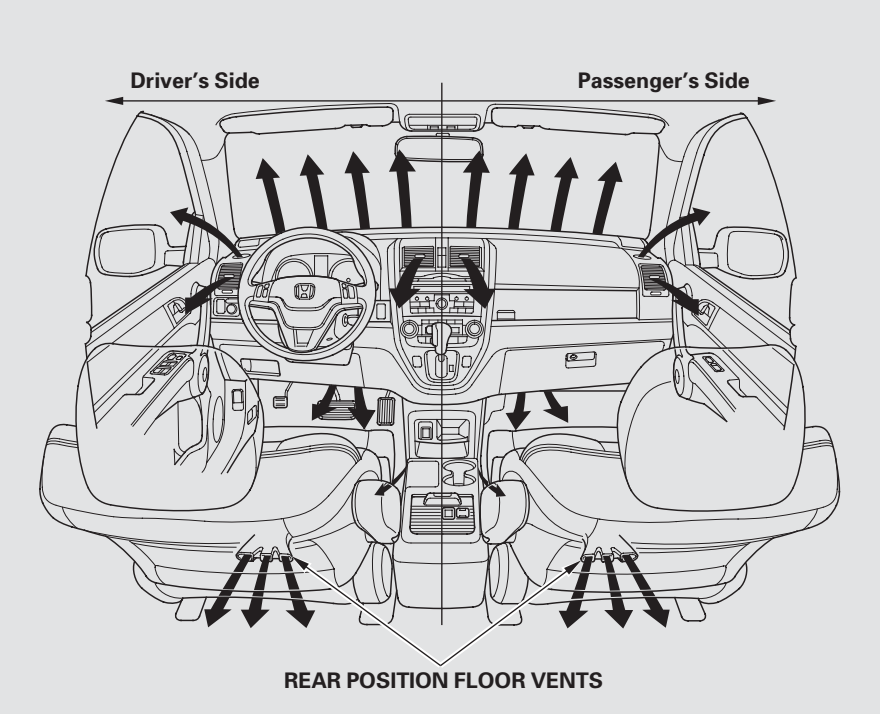

Climate Control Sensors

Sunlight and Temperature Sensors

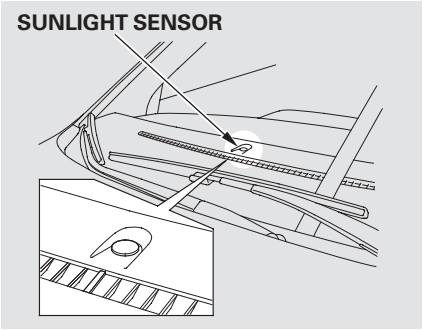

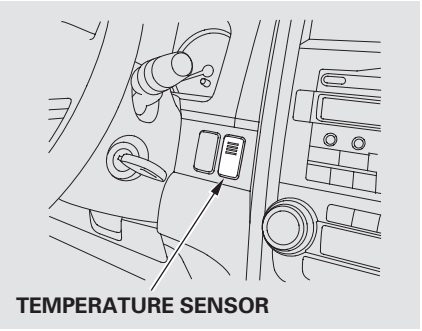

The climate control system has two sensors: a sunlight sensor on top of the dashboard, and a temperature sensor next to the steering column. Do not cover the sensors or spill any liquid on them.

An audio system is standard on all models. Read the appropriate pages (as shown below) to use your vehicle's audio system.

For LX models, see pages 145 through 156.

For EX and EX-L models without navigation system, see pages 157 through 193.

For EX-L model with navigation system, see pages 194 through 249.

LX models

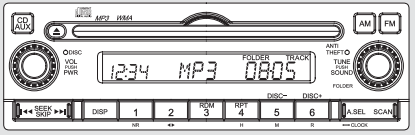

EX models

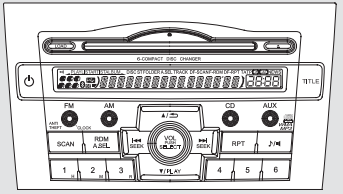

EX-L models

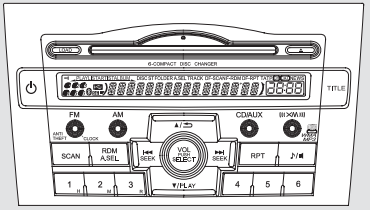

Audio System

EX-L model with navigation system

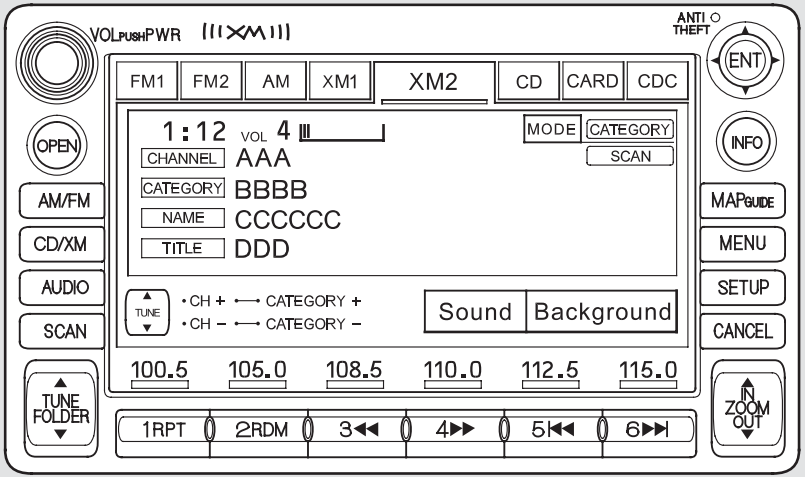

Playing the AM/FM Radio (LX model)

U.S. and Canadian LX models

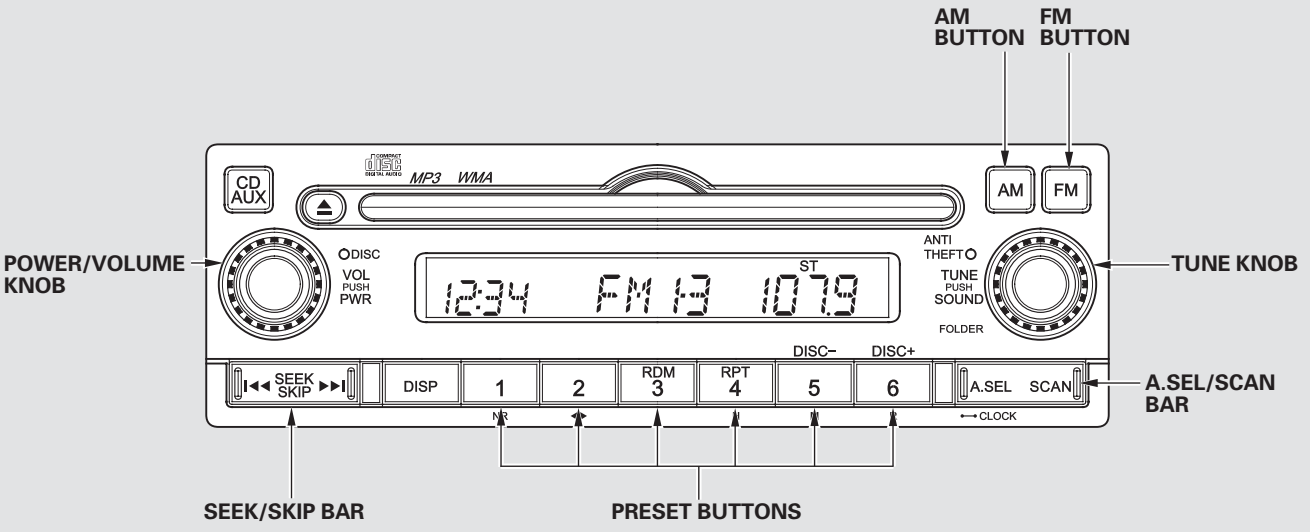

Playing the AM/FM Radio (LX model)

To Play the AM/FM Radio
The ignition switch must be in the ACCESSORY (I) or ON (II) position. Turn the system on by pushing the power/volume knob or the AM or FM button. Adjust the volume by turning the power/volume knob.

The band and frequency that the radio was last tuned to is displayed. To change bands, press the AM or FM button. On the FM band, ST will be displayed if the station is broadcasting in stereo. Stereo reproduction on AM is not available.

To Select a Station
You can use any of five methods to find radio stations on the selected band: tune, seek, scan, the preset buttons, and auto select.

TUNE — Use the TUNE knob to tune the radio to a desired frequency. Turn the knob to the right to tune to a higher frequency, and turn it to the left to tune to a lower frequency.

SEEK/SKIP — The seek function searches up and down from the current frequency to find a station with a strong signal. To activate it, press the |◄◄ or ►►| side of the SEEK bar, then release it.

SCAN — The scan function samples all stations with strong signals on the selected band. To activate it, press the right side of the A. SEL/SCAN bar, then release it. You will see SCAN in the display. The system will scan for a station with a strong signal. When it finds one, it will stop and play that station for about 10 seconds.

If you do nothing, the system will then scan for the next strong station and play it for 10 seconds. When it plays a station you want to listen to, press the SCAN side of the bar again.

Preset — Each preset button can store one frequency on AM and two frequencies on FM.

1. Select the desired band, AM or FM. You can store one frequency on FM1, and one frequency on FM2 with each preset button.

2. Use the tune, seek, or scan function to tune the radio to a desired station.

3. Pick a preset button (1—6), and hold it until you hear a beep.

4. Repeat steps 1 through 3 to store a total of six stations on AM and twelve stations on FM.

AUTO SELECT — If you are traveling and can no longer receive your preset stations, you can use the auto select feature to find stations in the local area.

Press the left side of the A. SEL/SCAN bar. You will see A. SEL flashing in the display, and the system goes into scan mode for several seconds. It stores the frequencies of six AM, and twelve FM stations in the preset buttons.

You will see a “0” displayed after pressing a preset button if auto select cannot find a strong station for every preset button.

If you do not like the stations auto select has stored, you can store other frequencies on the preset buttons as previously described.

To turn off auto select, press the A. SEL side of the bar. This restores the presets you originally set.

For information on AM/FM radio frequencies and reception, see page 250.

Playing the AM/FM Radio (LX model)

Adjusting the Sound
Press the SOUND (TUNE) knob repeatedly to display the BASS, TREBLE, FADER, BALANCE, and SVC (speed-sensitive volume compensation) settings.

BASS — Adjusts the bass.

TREBLE — Adjusts the treble.

FADER — Adjusts the front-to-back strength of the sound.

BALANCE — Adjusts the side-to-side strength of the sound.

SVC — Adjusts the volume level based on the vehicle speed.

Each mode is shown in the display as it changes. Turn the TUNE knob to adjust the setting to your liking.

Except SVC adjustment
When the level reaches the center, you will see "C" in the display.

The system will return to the audio display about 5 seconds after you stop adjusting a mode.

Speed-sensitive Volume Compensation (SVC)
The SVC mode controls the volume based on vehicle speed. The faster you go, the louder the audio volume becomes. As you slow down, the audio volume decreases.

The SVC has four modes: SVC OFF, SVC LOW, SVC MID, and SVC HIGH. Turn the TUNE knob to adjust the setting to your liking. If you feel the sound is too loud, choose low. If you feel the sound is too quiet, choose high.

Audio System Lighting
You can use the instrument panel brightness control knob to adjust the illumination of the audio system (see page 79). The audio system illuminates when the parking lights are on, even if the radio is turned off.

Playing a Disc (LX model)

U.S. and Canadian LX models

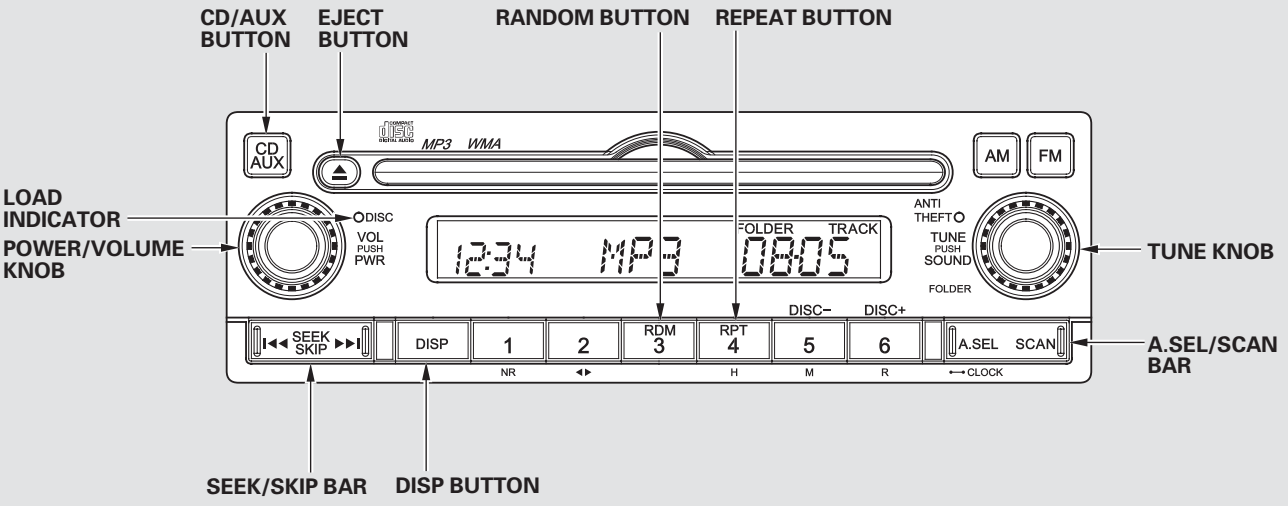

Playing a Disc (LX model)

To Play a Disc
To load or play a disc, the ignition switch must be in the ACCESSORY (I) or ON (II) position.

You operate the disc player with the same controls used for the radio. To select the disc player, press the CD/AUX button. You will see "CD" in the display.

NOTICE

Do not use discs with adhesive labels. The label can curl up and cause the disc to jam in the unit.

This audio system can also play CD-Rs and CD-RWs compressed in MP3 or WMA formats. When playing a disc in MP3, you will see "MP3" in the display. In WMA format, "WMA" will appear in the display. You can select up to 99 folders, or up to 255 tracks/files.

Depending on the software the files were made with, it may not be possible to play some files, or display some text data.

NOTE:
If a file on an MP3 or WMA disc is protected by digital rights management (DRM), the audio unit displays FORMAT, and then skips to the next file.

Video CDs and DVDs do not work in this unit.

To Load a Disc
Insert a disc about halfway into the disc slot. The drive will pull the disc in the rest of the way to play it. You operate the disc player with the same controls used for the radio. The number of the current track is shown in the display. When playing a disc in MP3 or WMA, the numbers of the current folder and file are shown. The system will continuously play a disc until you change modes.

You cannot load and play 3-inch (8-cm) discs in this system.

Text Data Display Function

Each time you press the DISP button, the display shows you the text data on a disc, if the disc was recorded with text data.

You can see the album, artist, and track name in the display. If a disc is recorded in MP3 or WMA, you can see the folder and file name, and the album, artist, and track tag.

With the folder name, you will see the FOLDER indicator in the display. The TRACK indicator is shown with the file or track name.

The display shows up to 10 characters of selected text data (the folder name, file name, etc.). If the text data has more than 10 characters, you will see the first 9 characters and the > indicator in the display. Press and hold the DISP button until the next 10 characters are shown.

You will also see some text data under these conditions:

- When a new folder, file, or track is selected.
- When you change the audio mode to play a disc with text data or in MP3 or WMA.
- When you insert a disc, and the system begins to play.

When playing a CD-DA with text data, the album and track name are shown in the display. With a disc in MP3 or WMA, the display shows the folder and file name.

CONTINUED

Playing a Disc (LX model)

To Change or Select Tracks/Files
You can use the SEEK/SKIP bar while a disc is playing to select passages and change tracks (files in MP3/WMA mode).

SEEK/SKIP — Each time you press and release the ►►I side of the SEEK/SKIP bar, the player skips forward to the beginning of the next track (file in MP3 or WMA mode). Press and release the I◄◄ side, to skip backward to the beginning of the current track. Press it again to skip to the beginning of the previous track.

To move rapidly within a track, press and hold the ►►I or I◄◄ side of the SEEK/SKIP bar.

In MP3 or WMA mode
FOLDER SELECTION — To select a different folder, turn the TUNE knob to move to the beginning of the next folder. Turn the knob to the right to skip to the next folder, and to the left to move to the beginning of the current folder. Turn it again to skip to the beginning of the previous folder. Turning the TUNE knob more than one click skips several folders at a time.

REPEAT (TRACK/FILE REPEAT) — To continuously replay a track (files in MP3 or WMA mode), press and release the RPT button. You will see “RPT” in the display. Press and hold the RPT button for 2 seconds to turn it off.

In MP3 or WMA mode
FOLDER-REPEAT — This feature, when activated, replays all files in the selected folder in the order they are compressed. To activate folder repeat, press the RPT button twice. You will hear a beep and see F-RPT in the display. The system continuously replays the current folder. Press the RPT button again to turn it off. Pressing the RDM button, or selecting a different folder with the TUNE knob also turns off the repeat feature.

Each time you press and release the RPT button, the mode changes from file repeat to folder repeat, then to normal play.

RANDOM (Random within a disc) — This feature plays the tracks within a disc (the files in MP3 or WMA mode) in random order. To activate random play, press and release the RDM button. In MP3 or WMA mode, press the RDM button repeatedly to select RDM (within a disc random play). You will see “RDM” in the display. Press the RDM button for 2 seconds to return to normal play.

CONTINUED

Playing a Disc (LX model)

In MP3 or WMA mode
FOLDER-RANDOM — This feature, when activated, plays all files on the selected folder in random order. To activate folder random, press the RDM button 2 times. You will hear a beep and see F-RDM in the display. The system will then select and play files randomly. This continues until you deactivate folder random by pressing and holding the RDM button again, or by selecting a different folder with the TUNE knob.

Each time you press and release the RDM button, the mode changes from folder random play to random play (within a disc random play), then to normal play.

SCAN (TRACK/FILE SCAN) — The scan function samples all tracks (files in MP3 or WMA) on the disc in the order they are recorded on the disc. To activate scan, press and release the SCAN bar. You will see SCAN in the display. You will get a 10 second sampling of each track/file on the disc. Press and hold the SCAN button for about 2 seconds to get out of scan mode and play the last track/file sampled.

Pressing either side of the SEEK/SKIP bar also turns off the scan feature.

In MP3 or WMA mode
F-SCAN (FOLDER SCAN) — This feature, when activated, samples the first file of each folder on the disc. To activate folder scan, press the SCAN bar twice. You will see F-SCAN in the display.

The system plays the first file in the first folder for about 10 seconds. If you do nothing, the system will then play the first files in the next folders for 10 seconds. After playing the first file in the last folder, the system plays normally.

Pressing either side of the SEEK/SKIP bar, selecting a different folder with the TUNE knob, or pressing the SCAN bar, also turns off folder scan.

Each time you press and release the SCAN bar, the mode changes from scan to folder scan, then to normal play.

Playing a Disc (LX model)

To Stop Playing a Disc
Press the eject button (⏏) to remove the disc. If you eject the disc, but do not remove it from the slot, the system will automatically reload the disc after 10 seconds and put it in pause mode. To begin playing, press the CD/AUX button.

You can also eject the disc when the ignition switch is off.

To play the radio when a disc is playing, press the AM or FM button. Press the CD/AUX button again to switch back to the disc player.

If you turn the system off while a disc is playing, either with the power/volume knob or by turning off the ignition switch, the disc will stay in the drive. When you turn the system back on, the disc will begin playing where it left off.

Protecting Discs
For information on how to handle and protect compact discs, see page 252.

Disc Player Error Messages (LX model)

The chart on the right explains the error messages you may see in the display while playing a disc.
If you see an error message in the display while playing a disc, press the eject button. After ejecting the disc, check it for damage or deformation. If there is no damage, insert the disc again.
For additional information on damaged discs, see page 253 .

The audio system will try to play the disc. If there is still a problem, the error message will reappear. Press the eject button, and pull out the disc. Insert a different disc. If the new disc plays, there is a problem with the first disc. If the error message cycle repeats and you cannot clear it, take your vehicle to a dealer.

Error Message	Cause	Solution
CD FORMAT	Track/File format not supported	Current track will be skipped. The next supported track or file plays automatically.
BAD DISC CHECK MANUAL PUSH EJECT	Mechanical Error	Press the eject button and pull out the disc. Check the disc for serious damage, signs of deformation, excessive scratches, and/or dirt see page 253 . Insert the disc again. If the code does not disappear, or the disc cannot be removed, consult your dealer. Do not try to force the disc out of the player.
BAD DISC CHECK MANUAL	Servo Error	

The ejected disc will not be reloaded automatically.

Playing the FM/AM Radio (EX and EX-L models without navigation system)

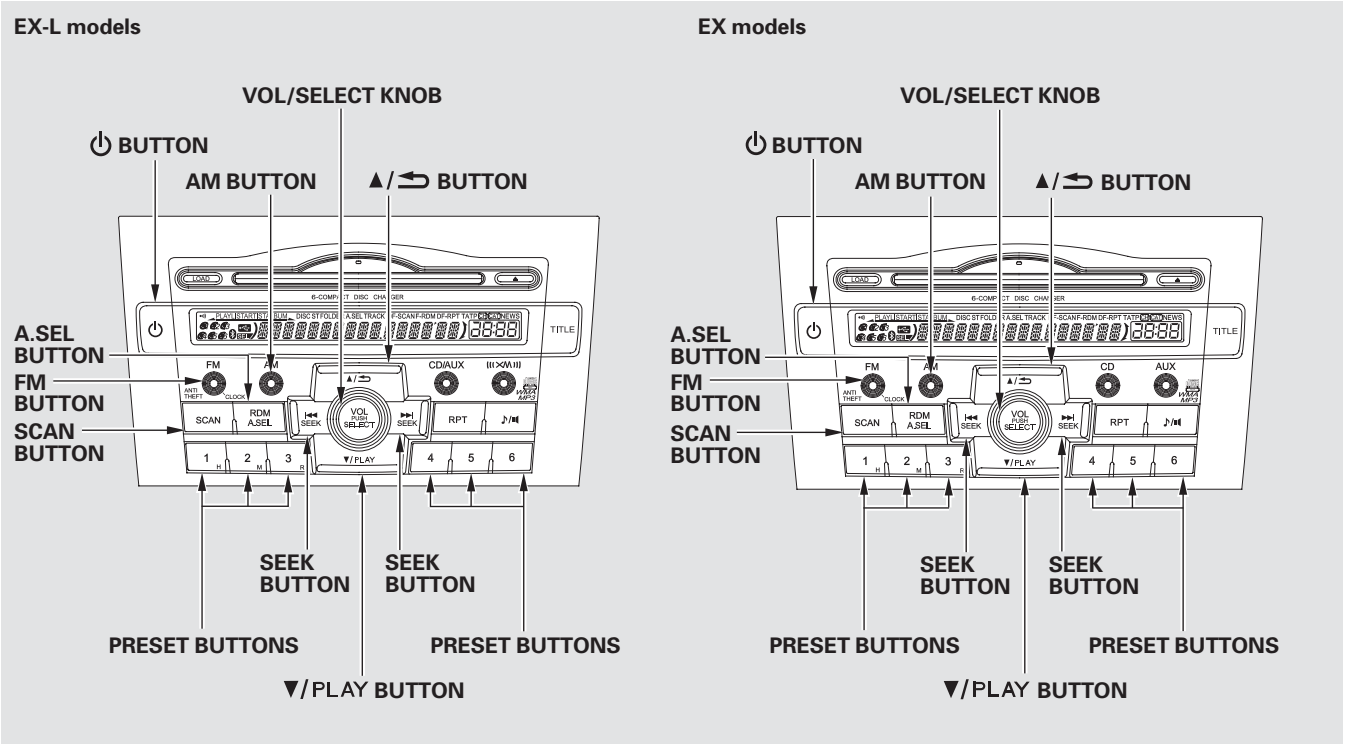

Playing the FM/AM Radio (EX and EX-L models without navigation system)

To Play the FM/AM Radio
The ignition switch must be in the ACCESSORY (I) or ON (II) position. Turn the system on by pushing the FM or AM button. Adjust the volume by turning the VOL/SELECT knob.

The band and frequency that the radio was last tuned to are displayed. To change bands, press the AM or FM button. On the FM band, ST will be displayed if the station is broadcasting in stereo. Stereo reproduction in AM is not available.

To Select a Station
You can use any of five methods to find radio stations on the selected band: tune, seek, scan, the preset buttons, and auto select.

TUNE — Use the SEEK button to tune to a desired frequency. Press the ▶▶| SEEK button to tune to a higher frequency, and the |◀◀ SEEK button to tune to a lower frequency.

You can also operate the tune function by using the VOL/SELECT knob. Press the VOL/SELECT knob and you will see “SEL” in the display. Turn the knob right to tune to a higher frequency, or left to tune to a lower frequency. To turn it off, press the VOL/SELECT knob or ▲/⮌ button, or ▼/PLAY button. The system will return to the normal display about 10 seconds after you stop adjusting the tune mode.

SEEK — The SEEK function searches up and down from the current frequency to find a station with a strong signal. To activate it, press and hold the |◀◀ SEEK or ▶▶| SEEK side of the SEEK button until you hear a beep, then release it.

SCAN — The scan function samples all stations with strong signals on the selected band. To activate it, press the SCAN button, then release it. You will see SCAN in the display. When the system finds a strong signal, it will stop and play that station for about 10 seconds.

If you do nothing, the system will then scan for the next strong station and play it for 10 seconds. When it plays a station you want to listen to, press the SCAN button again.

Playing the FM/AM Radio (EX and EX-L models without navigation system)

Preset — Each preset button can store one frequency on AM and two frequencies on FM.

1. Select the desired band, AM or FM.
2. Use the tune, seek, or scan function to tune the radio to a desired station.
3. Pick a preset number (1—6), and hold it until you hear a beep.
4. Repeat steps 1 through 3 to store a total of six stations on AM and twelve stations on FM.

AUTO SELECT — If you are traveling and can no longer receive your preset stations, you can use the auto select feature to find stations in the local area.

Press the A. SEL button. "A. SEL" flashes in the display, and the system goes into scan mode for several seconds. It stores the frequencies of six AM and twelve FM stations in the preset buttons.

You will see a "0" displayed after pressing a preset button if auto select cannot find a strong station for that preset button.

If you do not like the stations auto select has stored, you can store other frequencies on the preset buttons as previously described.

To turn off auto select, press the A. SEL button. This restores the presets you originally set.

For information on FM/AM radio frequencies and reception, see page 250 .

Playing the FM/AM Radio (EX and EX-L models without navigation system)

Adjusting the Sound
Press the sound ( ) button to select an appropriate setting: bass, treble, fader, balance, subwoofer (if equipped), and SVC (speed-sensitive volume compensation). Turn the VOL/SELECT knob to adjust the setting.

BAS — Adjusts the bass.

TREBLE — Adjusts the treble.

FADER — Adjusts the front-to-back strength of the sound.

BALANCE — Adjusts the side-to-side strength of the sound.

If equipped
SUBW — Adjusts the strength of sound from the subwoofer speaker.

Each mode is shown in the display as it changes. Turn the VOL/SELECT knob to adjust the setting to your liking. When the level reaches the center, you will see "C" in the display.

SVC — Adjusts the volume level based on the vehicle speed.

The system will return to the audio display about 10 seconds after you stop adjusting a mode.

Speed-sensitive Volume Compensation (SVC)
The SVC mode controls the volume based on vehicle speed. The faster you go, the louder the audio volume becomes. As you slow down, the audio volume decreases.

The SVC has four modes: SVC OFF, SVC LOW, SVC MID, and SVC HIGH. Turn the VOL/SELECT knob to adjust the setting to your liking. If you feel the sound is too loud, choose low. If you feel the sound is too quiet, choose high.

Audio System Lighting
You can use the instrument panel brightness control knob to adjust the illumination of the audio system (see page 79). The audio system illuminates when the parking lights are on, even if the system is turned off.

Playing the XM® Radio (EX-L model without navigation system)

Playing the XM® Radio

On EX-L without Navigation System

Your vehicle is capable of receiving XM® Radio anywhere in Canada and the United States, except Hawaii, Alaska, and Puerto Rico. XM CANADA® is a registered business name of Canadian Satellite Radio Inc., and XM is a registered trademark of Sirius XM Radio, Inc.

XM Radio receives signals from two satellites to produce clear, high-quality digital reception. It offers many channels in several categories. Along with a large selection of different types of music, XM Radio allows you to view channel and category selections in the display.

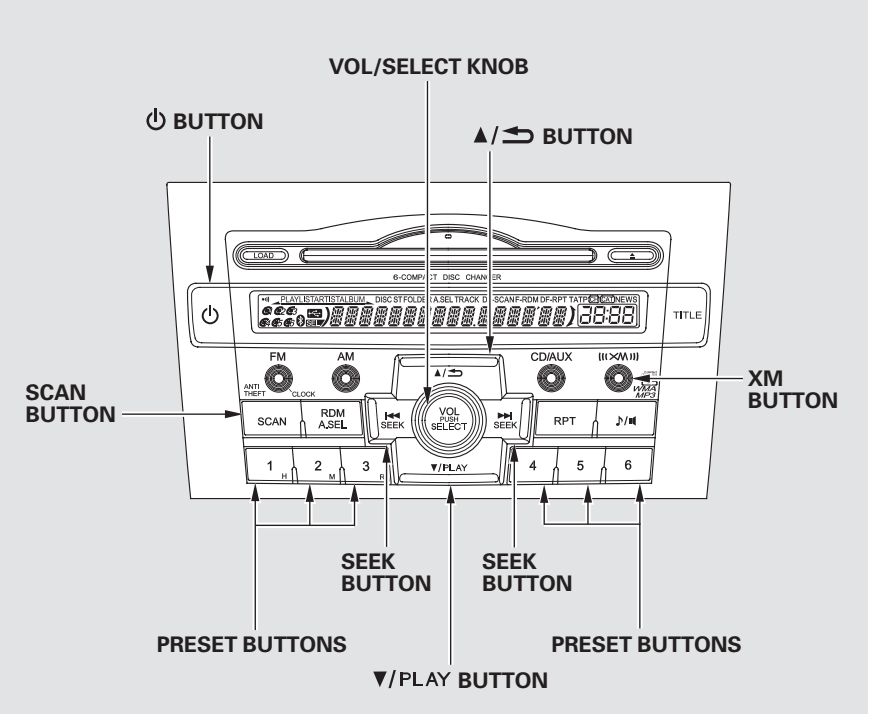

Playing the XM® Radio (EX-L model without navigation system)

Operating the XM Radio
To listen to XM radio, turn the ignition switch to the ACCESSORY (I) or the ON (II) position. Push the ⏻ button to turn on the audio system, and press the "XM" button. Adjust the volume by turning the VOL/SELECT knob. The last channel you listened to will show in the display.

MODE — To switch between channel mode and category mode, press and hold the TITLE button until the mode changes.
In channel mode, you can select all of the available channels. In category mode, such as Jazz, Rock, Classical, etc., you can select all of the channels within that category.
Each time you press and release the TITLE button, the display changes in the following sequence: channel name, channel number, category, artist name, and music title.

You may experience periods when XM Radio does not transmit the artist's name and song title information. If this happens, there is nothing wrong with your system.

TUNE — Press the SEEK button to change channel selections. Press ▶▶| SEEK for higher numbered channels and |◀◀ SEEK for lower numbered channels. In the category mode, you can only select channels within that category.

CATEGORY (▲ or ▼) — In the category mode, press either button to select another category.

SCAN — The scan function gives you a sampling of all channels while in the channel mode. In the category mode, only the channels within that category are scanned. To activate scan, press the SCAN button. The system plays each channel in numerical order for a few seconds, then selects the next channel. When you hear a channel you want to continue listening to, press the button again.

Preset — You can store up to 12 preset channels using the six preset buttons. Each button stores one channel from the XM1 band and one channel from the XM2 band.

To store a channel:

1. Press the XM button. Either XM1 or XM2 will show in the display.
2. Use the tune, seek, or scan function to tune to a desired channel.

In category mode, only channels within that category can be selected. In channel mode, all channels can be selected.

3. Pick the preset button you want for that channel. Press and hold the button until you hear a beep.
4. Repeat steps 2 and 3 to store the first six channels.
5. Press the XM button again. Store the next six channels using steps 2 and 3.

Once a channel is stored, press and release the proper preset button to tune to it.

XM Radio Display Messages

"LOADING" — XM is loading the audio or program information.

"OFF AIR" — The channel currently selected is no longer broadcasting.

"UPDATING" — The encryption code is being updated. Wait until the encryption code is fully updated. Channels 0 and 1 should still work normally.

"NO SIGNAL" — The signal is currently too weak. Move the vehicle to an area away from tall buildings, and with an unobstructed view of the southern horizon.

CONTINUED

Playing the XM® Radio (EX-L model without navigation system)

" - - - - " — The selected channel number does not exist, or is not part of your subscription, or this channel has no artist or title information at this time.

"ANTENNA" — There is a problem with the XM antenna. Please consult your dealer.

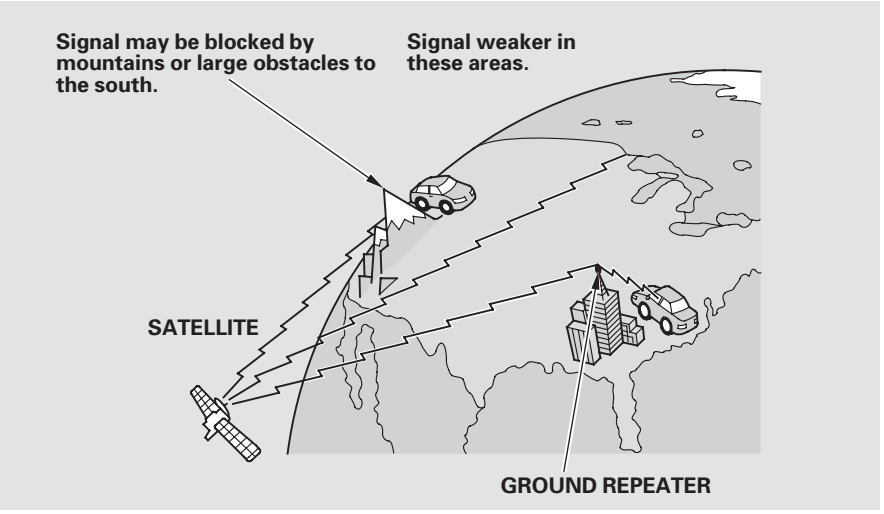

The XM satellites are in orbit over the equator; therefore, objects south of the vehicle may cause satellite reception interruptions. To help compensate for this, ground-based repeaters are placed in major metropolitan areas.

Satellite signals are more likely to be blocked by tall buildings and mountains the farther north you travel from the equator. Carrying large items on a roof rack can also block the signal.

Playing the XM® Radio (EX-L model without navigation system)

Depending on where you drive, you may experience reception problems. Interference can be caused by any of these conditions:

- Driving on the north side of an east/west mountain road.
- Driving on the north side of a large commercial truck on an east/west road.
- Driving in tunnels.
- Driving on a road beside a vertical wall, steep cliff, or hill to the south of you.
- Driving on the lower level of a multi-tiered road.
- Driving on a single lane road alongside dense trees taller than 50 ft. (15 m) to the south of you.
- Large items carried on a roof rack.

There may be other geographic situations that could affect XM Radio reception.

As required by the FCC:
Changes or modifications not expressly approved by the party responsible for compliance could void the user's authority to operate the equipment.

Receiving XM Radio Service
If your XM Radio service has expired or you purchased your vehicle from a previous owner, you can listen to a sampling of the broadcasts available on XM Radio. With the ignition switch in the ACCESSORY (I) or ON (II) position, push the ⏻ button to turn on the audio system and press the XM button. A variety of music types and styles will play.

If you decide to purchase XM Radio service, contact XM Radio at *www.xmradio.com*, or at 1-800-852-9696. In Canada, contact XM CANADA® at *www.xmradio.ca*, or at 1-877-209-0079. You will need to give them your radio I.D. number and your credit card number. To get your radio I.D. number, press SEEK until "CH000" appears in the display. Your I.D. will appear in the display.

After you've registered with XM Radio, keep your audio system in the XM radio mode while you wait for activation. This should take about 30 minutes.

While waiting for activation, make sure your vehicle remains in an open area with good reception. Once your audio system is activated, you'll be able to listen to XM Radio broadcasts. XM Radio will continue to send an activation signal to your vehicle for at least 12 hours from the activation request. If the service has not been activated after 36 hours, contact XM® Radio. In Canada, contact XM CANADA®.

Playing Discs (EX and EX-L models without navigation system)

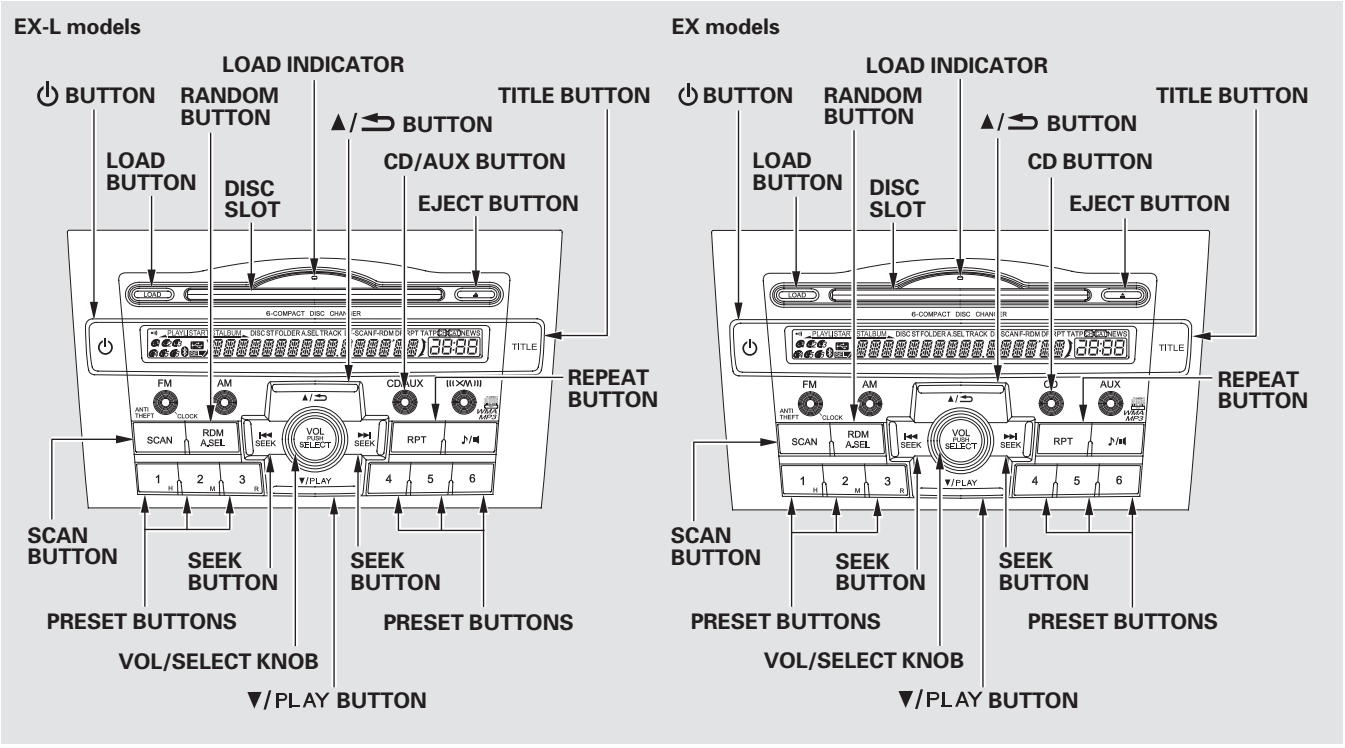

Playing Discs (EX and EX-L models without navigation system)

To Play a Disc
To load or play discs, the ignition switch must be in the ACCESSORY (I) or ON (II) position.
You operate the disc changer with the same controls used for the radio. To select the disc changer, press the CD button (CD/AUX button on models with XM® Radio), the disc and track numbers are displayed. The system will continuously play a disc until you change modes.

NOTICE

Do not use discs with adhesive labels. The label can curl up and cause the disc to jam in the unit.

This audio system can also play CD-Rs and CD-RWs compressed in MP3 or WMA formats. The numbers of the folder and track playing are shown in the display on the disc player. A disc can support up to 255 folders, and each folder can hold up to 255 playable files. A disc can hold up to 999 files in total.

When there are more than 99 folders in a disc, the audio display only shows two digits.

Depending on the software the files were made with, it may not be possible to play some files, or display some text data.

CONTINUED

Playing Discs (EX and EX-L models without navigation system)

NOTE:
If a file on an MP3 or WMA disc is protected by digital rights management (DRM), the audio unit displays UNSUPPORTED, and then skips to the next file.

Video CDs and DVDs do not work in this unit.

Loading Discs in the In-dash Disc Changer
Your vehicle's in-dash disc changer holds up to six discs.

1. Press the LOAD button until you hear a beep and see "LOAD" on the display.

   To load only one CD, press and release the LOAD button.

2. The disc number for an empty position is highlighted and the red disc load indicator starts blinking.

3. Insert the disc into the disc slot when the green disc load indicator comes on. Insert it only about halfway; the drive will pull it in the rest of the way. You will see "BUSY" in the display while the disc load indicator turns red and blinks as the disc is loaded.

   You cannot load and play 3-inch (8-cm) discs in this system.

4. When the disc load indicator turns green and "LOAD" appears in the display again, insert the next disc in the slot. Do not try to insert a disc until "LOAD" appears. You could damage the audio unit.

5. Repeat this until all six positions are loaded. If you are not loading all six positions, the system begins playing the last disc loaded.

Playing Discs (EX and EX-L models without navigation system)

You can also load a disc into an empty position while a disc is playing by pressing the appropriate preset button. The system stops playing the current disc and starts the loading sequence. It then plays the disc just loaded.

Text Data Display Function

Each time you press the TITLE button, the display shows you the text, if the disc was recorded with text data.

You can see the album, artist, and track name in the display. If a disc is recorded in MP3 or WMA, you can see the folder and file name, and the artist, album, and track tag.

With the folder name, you will see the FOLDER indicator in the display. The TRACK indicator is shown with the file or track name.

The display shows up to 16 characters of selected text data (the folder name, file name, etc.).

If the text data has more than 16 characters, you will see the first 15 characters and the > indicator on the display. Press and hold the TITLE button until the next 16 characters are shown. You can see up to 31 characters of text data.

If you press and hold the TITLE button again, the display shows the first 15 characters again.

If any letter is not available, it is replaced with " . " (dot) in the display. When the disc has no text data, you will see "NO INFO" on the display.

CONTINUED

Playing Discs (EX and EX-L models without navigation system)

You will also see some text data under these conditions:

- When a new folder, file, or track is selected.
- When you change the audio mode to play a disc with text data or in MP3 or WMA.
- When you insert a disc, and the system begins to play.

When playing a CD-DA with text data, the album and track name are shown in the display. With a disc in MP3 or WMA, the display shows the folder and file name.

To select a different disc, press the appropriate preset button (1 – 6). If you select an empty position in the disc changer, the system will try to load the disc in the next available slot.

To Change or Select Tracks/Files

You can use the SEEK button while a disc is playing to change tracks (files in MP3/WMA mode).

In MP3/WMA mode, use the ▲/⮌ or ▼/PLAY button to select folders in the disc, and use the SEEK button to change files.

Playing Discs (EX and EX-L models without navigation system)

SEEK/SKIP — Each time you press and release the SEEK side, the player skips forward to the beginning of the next track (files in MP3/WMA mode). Press and release the SEEK side to skip backward to the beginning of the current track. Press it again to skip to the beginning of the previous track.

To move rapidly within a track, press and hold the SEEK, or the SEEK button.

You can also operate the track selection by using the VOL/SELECT knob. Press the VOL/SELECT knob and you will see "SEL" in the display. Turn the knob to switch the track number. Press the VOL/SELECT knob or ▼/PLAY button to set your selection. To turn it off, press the ▲/⮌ button.

In MP3 or WMA mode
FOLDER SELECTION — To select a different folder, press the ▲/⮌ or ▼/PLAY button. Press the ▲/⮌ button to skip to the next folder, and the ▼/PLAY button to skip to the previous folder.

You can also operate the folder and file selection by using the VOL/SELECT knob. Press the VOL/SELECT knob and you will see "SEL" in the display, Turn the knob to switch the folder number and press the knob to set your selection. To turn it off, press the ▲/⮌ button repeatedly.

REPEAT (TRACK/FILE REPEAT) — To continuously replay a track (file in MP3/WMA mode), press and release the RPT button. You will see RPT in the display. Press and hold the RPT button to turn it off.

CONTINUED

Playing Discs (EX and EX-L models without navigation system)

In MP3 or WMA mode
FOLDER-REPEAT — This feature, when activated, replays all the files in the selected folder in the order they are compressed in MP3/WMA. To activate folder repeat mode, press the RPT button repeatedly until you see F-RPT in the display. The system continuously replays the current folder. Press and hold the RPT button to turn it off.

Each time you press and release the RPT button, the mode changes from file repeat to folder repeat, then to normal play.

DISC-REPEAT — To continuously replay the current disc, press and release the RPT button repeatedly until you see D-RPT in the display. Press and hold the RPT button for 2 seconds again to turn it off.

Each time you press and release the RPT button, the mode changes from file repeat to folder repeat, to disc repeat then to normal play.

RANDOM (Random within a disc) — This feature plays the tracks within a disc in random order. In MP3/WMA mode, all files in all folders are played in random order. To activate random mode, press the RDM button repeatedly until you see RDM in the display. Press and hold the RDM button to turn it off.

In MP3 or WMA mode
FOLDER-RANDOM — This feature, when activated, plays the files in the current folder in random order, rather than in the order they are compressed in MP3/WMA. To activate folder random play, press the RDM button. You will see F-RDM in the display. The system will then select and play files randomly. This continues until you deactivate folder random play by pressing and holding the RDM button.

Each time you press and release the RDM button, the mode changes from folder random play, to within a disc random play, then to normal play.

SCAN — The SCAN function samples all the tracks on the disc in the order they are recorded on the disc (all files in the current folder in MP3 or WMA mode). To activate the scan feature, press and release the SCAN button. You will see "SCAN" in the display. You will get a 10 second sampling of each track/file in the disc/folder. Press and hold the SCAN button to get out of scan mode and play the last track sampled.

In MP3 or WMA mode
FOLDER-SCAN — This feature, when activated, samples the first file in each folder on the disc in the order they are recorded. To activate the folder scan feature, press the SCAN button repeatedly. You will see "F-SCAN" in the display. The system will then play the first file in the main folders for about 10 seconds. When it plays a file that you want to continue listening to, press and hold the SCAN button. When the system samples the first file of all folders, F-SCAN is canceled, and the system plays normally.

Each time you press and release the SCAN button, the mode changes from file scan, folder scan, disc scan, then to normal play.

CONTINUED

Playing Discs (EX and EX-L models without navigation system)

DISC-SCAN — This function samples the first track of each disc in the in-dash disc changer in the order they are stored. To activate disc scan, press the SCAN button repeatedly until you see D-SCAN in the display. The system will then play the first track/file of the first disc for approximately 10 seconds. After playing the first track/file of the last disc, the system plays normally.

To Stop Playing a Disc
To play the radio when a disc is playing, press the AM, FM, or XM button (EX-L). Press the AUX or CD/AUX button to switch to an appropriate audio unit (if it is connected to the USB adapter cable or the auxiliary input jack). Press the CD or CD/AUX button again to switch back to playing a disc.

If you turn the system off while a disc is playing, either with the (⏻) button or by turning off the ignition switch, the disc will stay in the drive. When you turn the system back on, the disc will begin playing where it left off.

You can also press the MODE button on the steering wheel to change modes.

Removing Discs from the In-dash Disc Changer
To remove the disc currently in play, press the eject button. When a disc is removed from a slot, the system automatically begins the load sequence so you can load another disc in that position. If you do not remove the disc from the changer within 10 seconds, the disc will reload into the slot. Then the system returns to the previous mode (AM, FM, or XM Radio*).

*: On EX-L model

Playing Discs (EX and EX-L models without navigation system)

To remove a different disc from the changer, first select it with the appropriate preset button. When that disc begins playing, press the eject button. Continue pressing the eject button to remove all the discs from the changer.

You can also eject discs when the ignition switch is off. The disc that was last selected is ejected first.

Protecting Discs
For information on how to handle and protect compact discs, see page 252 .

Disc Changer Error Messages (EX and EX-L models without navigation system)

The chart on the right explains the error messages you may see in the display while playing a disc.
If you see an error message in the display while playing a disc, press the eject button. After ejecting the disc, check it for damage or deformation. If there is no damage, insert the disc again.
For additional information on damaged discs, see page 253 .

The audio system will try to play the disc. If there is still a problem, the error message will reappear. Press the eject button, and pull out the disc. Insert a different disc. If the new disc plays, there is a problem with the first disc. If the error message cycle repeats and you cannot clear it, take your vehicle to a dealer.

Error Message	Cause	Solution
UNSUPPORTED FORMAT	Track/File format not supported	Current track will be skipped. The next supported track or file plays automatically.
BAD DISC PLEASE CHECK OWNERS MANUAL PUSH EJECT	Mechanical Error	Press the eject button and pull out the disc(s). Check the disc for serious damage, signs of deformation, excessive scratches, and/or dirt see page 253 . Insert the disc again. If the code does not disappear, or the disc(s) cannot be removed, consult your dealer. Do not try to force the disc out of the player.
BAD DISC PLEASE CHECK OWNERS MANUAL	Servo Error	

The ejected disc will not be reloaded automatically.

Playing an iPod® (Canadian EX model and EX-L model without navigation system)

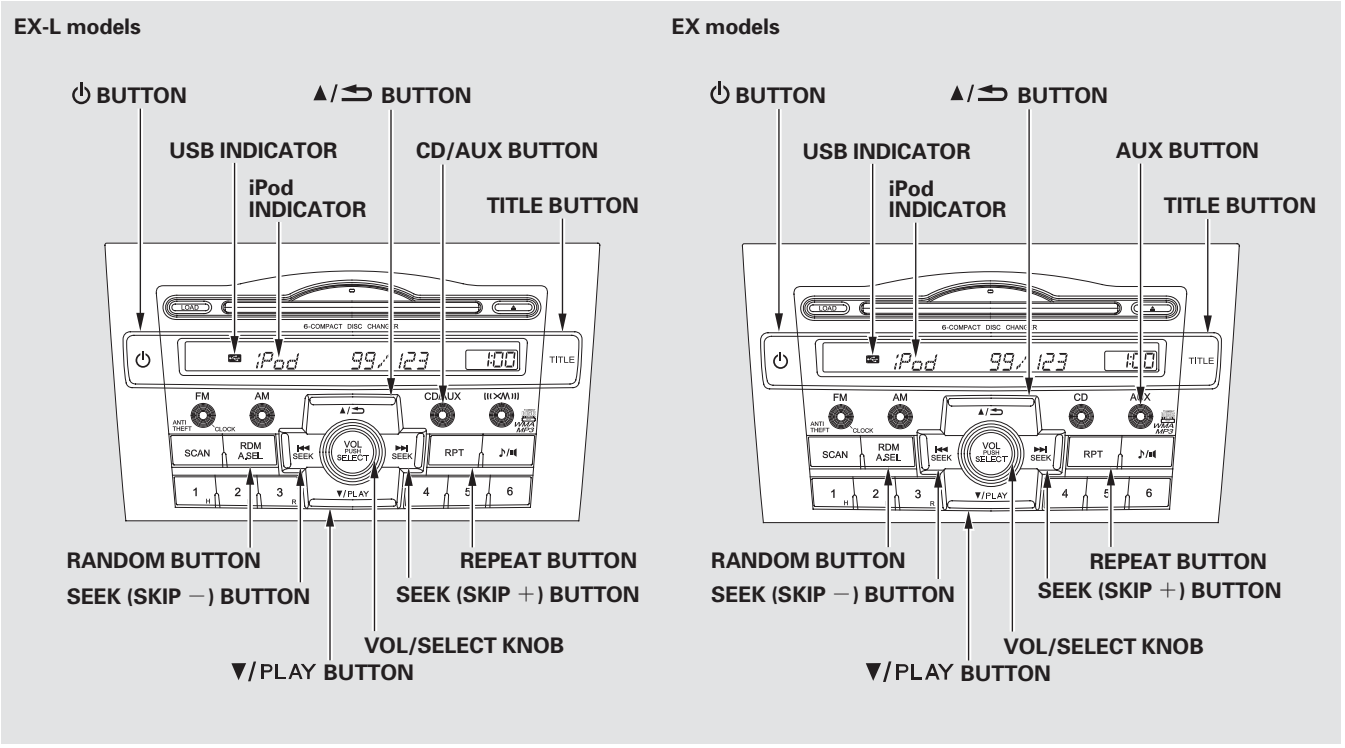

Playing an iPod® (Canadian EX model and EX-L model without navigation system)

To Play an iPod®
This audio system can play the audio files on the iPod® with the same controls used for the in-dash disc changer. To play an iPod, connect it to the USB adapter cable in the upper glove box by using your dock connector, then press the CD/AUX or AUX button. The ignition switch must be in the ACCESSORY (I) or ON (II) position. The iPod will also be recharged with the ignition switch in these positions.

The audio system reads and plays playable sound files on the iPod. The system cannot operate an iPod as a mass storage device. The system will only play songs stored on the iPod with iTunes.

iPod and iTunes are registered trademarks owned by Apple Inc.

iPods compatible with your audio system using the USB adapter cable are:

Model	Software
iPod classic (80/160 G)	Ver. 1.1.2 or more
iPod classic (120 G)	Ver. 2.0.1 or more
iPod with video (iPod 5th generation)	Ver. 1.3.0 or more
iPod nano	Ver. 1.3.1 or more
iPod nano 2nd generation	Ver. 1.1.3 or more
iPod nano 3rd generation	Ver. 1.1.3 or more
iPod nano 4th generation	Ver. 1.0.3 or more
iPod nano 5th generation	Ver. 1.0.1 or more
iPod touch	Ver. 1.1.5 or more
iPod touch 2nd generation	Ver. 2.2.1 or more

Use only compatible iPods with the latest software. iPods that are not compatible will not work in this audio unit.

NOTE:
- Do not connect your iPod using a hub.
- Do not keep the iPod in the vehicle. Direct sunlight and high heat will damage it.
- Do not use an extension cable between the USB adapter cable equipped with your vehicle and your dock connector.
- We recommend backing up your data before playing it.
- Some devices cannot be powered or charged via the USB adapter. If this is the case, use the accessory adapter to supply power to your device.

Playing an iPod® (Canadian EX model and EX-L model without navigation system)

Connecting an iPod

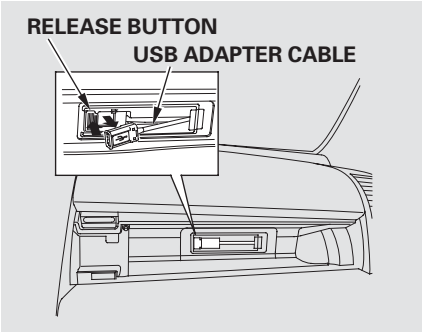

1. Open the upper glove box.

2. Push the release button to release the USB adapter cable.

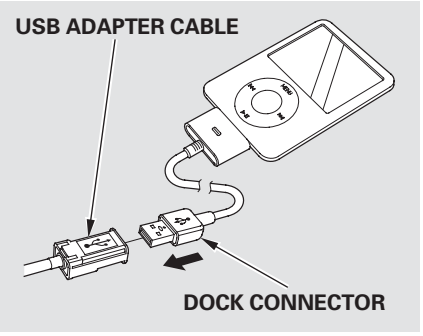

3. Connect your dock connector to the iPod correctly and securely.

4. Install the dock connector to the USB adapter cable securely.

If the iPod indicator does not appear in the audio display, check the connections, and try to reconnect the iPod a few times.

If the audio system still does not recognize the iPod, the iPod may need to be reset. Follow the instructions that came with your iPod, or you can find reset instructions online at *www.apple.com/itunes/*

CONTINUED

Playing an iPod® (Canadian EX model and EX-L model without navigation system)

Text Data Display Function
Each time you press the TITLE button the display mode switches between the album name, the song name, the artist name, or name off (which turns off the text display).

The display shows up to 16 characters of the selected data. If the text data has more than 16 characters, you will see the first 15 characters and the > indicator in the display. Press and hold the TITLE button until the next 16 characters are shown.

To Change or Select Files
Use the SKIP button while an iPod is playing to change files.

SKIP – Each time you press the SEEK (SKIP +) button, the system skips forward to the beginning of the next file. Press the SEEK (SKIP –) button, to skip backward to the beginning of the current file. Press it again to skip to the beginning of the previous file.

To move rapidly within a file, press and hold either side (SEEK or SEEK) of the SKIP button.

You can also select a file from any list on the iPod menu: playlists, artists, albums and songs, by using the VOL/SELECT knob. Push the VOL/SELECT knob to switch the display to an iPod menu, then turn the VOL/SELECT knob to select a desired list. Press the VOL/SELECT knob to set your selection.

Playing an iPod® (Canadian EX model and EX-L model without navigation system)

The display shows items on the selected list. Turn the VOL/SELECT knob to select an item, then press the VOL/SELECT knob to set your selection.

If you select "ALL," all available files on the selected list are played.

Pressing the ▲/⮌ button goes back to the previous display and pressing the TITLE button cancels this setting mode.

To Select Repeat or Shuffle Mode:
You can select any type of repeat and shuffle mode by using the RPT button or the RDM button.

REPEAT — This feature continuously plays a file. To activate the repeat feature, press the RPT button. You will see "RPT" in the display. To turn it off, press the RPT button again.

SHUFFLE ALL — This feature plays all available files in a selected list (playlists, artists, albums or songs) in random order. To activate the shuffle all feature, press the RDM button. You will see "RDM" in the display. To turn it off, press and hold the RDM button.

SHUFFLE ALBUM — This feature plays all available albums in a selected list (playlists, artists, albums or songs) in random order. The files in each album are played in the recorded order. To activate the shuffle album feature, press the RDM button repeatedly. You will see "F-RDM" in the display. To turn it off, press and hold the RDM button.

Each time you press the RDM button, the mode changes from shuffle all play to shuffle album play, then to normal play.

NOTE:
Available operating functions vary on models or versions. Some functions may not be available on the vehicle's audio system.

CONTINUED

Playing an iPod® (Canadian EX model and EX-L model without navigation system)

To Stop Playing Your iPod
To play the radio when an iPod is playing, press the FM, AM or XM button. If a disc is in the audio unit, press the CD/AUX or CD button to play the disc.

You can also press the MODE button on the steering wheel to change modes.

Disconnecting an iPod
You can disconnect the iPod at any time when you see the "OK to disconnect" message* in the iPod display. Always make sure you see the "OK to disconnect" message in the iPod display before you disconnect it. Make sure to follow the iPod's instructions on how to disconnect the dock connector from the USB adapter cable.

*: The displayed message may vary on models or versions. On some models, there is no message to disconnect.

If you reconnect the same iPod, the system may begin playing where it left off, depending on what mode the iPod is in when it is reconnected.

When you disconnect the iPod while it is playing, the display shows "USB NO DATA."

iPod Error Messages
If you see an error message in the display, see page 183 .

iPod® Error Messages (Canadian EX model and EX-L model without navigation system)

If you see an error message on the audio display while playing an iPod, find the solution in the chart to the right. If you cannot clear the error message, take your vehicle to your dealer.

Error Message	Cause	Solution
USB ERROR	USB ROM Error	There is problem with the USB adapter unit.
BAD USB DEVICE PLEASE CHECK OWNERS MANUAL	Appears when an incompatible device is connected.	Disconnect the device. Then, turn the audio system off, and turn it on again. Do not reconnect the device that caused the error.
iPod NO SONG	No files in iPod	Appears when the iPod is empty. Store some files in the iPod.
UNSUPPORTED VER.	Use of unsupported iPod	Appears when an unsupported iPod is connected. See page 178 for the specification information for iPods. If it appears when a supported iPod is connected, update the iPod software to the newer version.
CONNECT RETRY	Recognition failure of iPod	Appears when the system dose not acknowledge the iPod. Reconnect the iPod.

Playing a USB Flash Memory Device (Canadian EX model and EX-L model without navigation system)

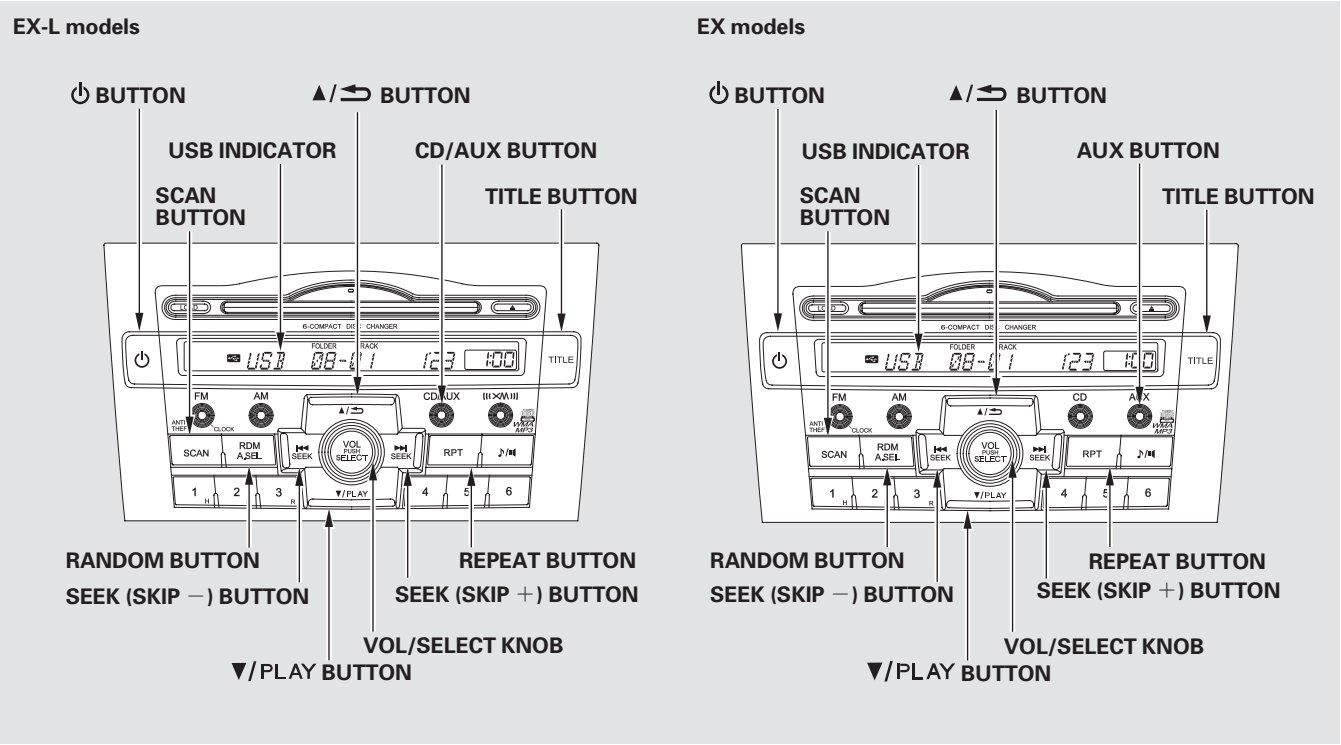

Playing a USB Flash Memory Device (Canadian EX model and EX-L model without navigation system)

To Play a USB Flash Memory Device

This audio system can operate the audio files on a USB flash memory device with the same controls used for the in-dash disc changer. To play a USB flash memory device, connect it to the USB adapter cable in the upper glove box, then press the CD/AUX or AUX button.

The audio system reads and plays the audio files on the USB flash memory device in MP3, WMA or AAC* formats. Depending on the format, the display shows MP3, WMA or AAC when a USB flash memory device is playing. The USB flash memory device limit is up to 700 folders or up to 65535 files.

*: Only AAC format files recorded with iTunes are playable on this audio unit.

The recommended USB flash memory devices are 256 MB or higher, and formatted with the FAT file system. Some digital audio players may be compatible as well.

Some USB flash memory devices (such as devices with security lock-out features, etc.) will not work in this audio unit.

NOTE:

- Do not use a device such as a card reader or hard drive as the device or your files may be damaged.
- Do not connect your USB flash memory device using a hub.
- Do not use an extension cable to the USB adapter cable equipped with your vehicle.
- Do not keep a USB flash memory device in the vehicle. Direct sunlight and high heat will damage it.
- We recommend backing up your data before playing a USB flash memory device.
- Depending on the type and number of files, it may take some time before they begin to play.

CONTINUED

Playing a USB Flash Memory Device (Canadian EX model and EX-L model without navigation system)

- Depending on the software the files were made with, it may not be possible to play some files, or display some text data.
- Some devices cannot be powered or charged via the USB adapter. If this is the case, use the accessory adapter to supply power to your device.
- Depending on the type of encoding and writing software used, there may be cases where character information does not display properly.
- The order of files in USB playback may be different from the order of files displayed in PC or other devices etc. Files are played in the order stored in USB flash memory device.

Some versions of MP3, WMA, or AAC format may not be supported. If an unsupported file is found, the audio unit displays UNSUPPORTED, then skips to the next file.

NOTICE

Combining a low sampling frequency with a low bitrate may result in extremely degraded sound quality.

NOTE:
In WMA or AAC format, DRM (digital rights management) files cannot be played. If the system finds a DRM file, the audio unit displays UNPLAYABLE FILE, and then skips to the next file.

Connecting a USB Flash Memory Device

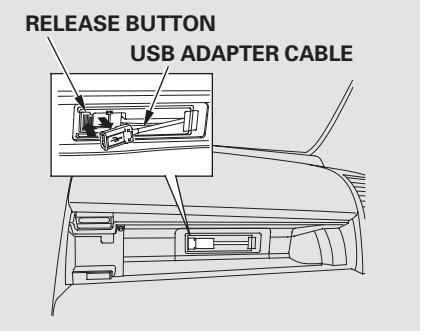

1. Open the upper glove box.
2. Push the release button to release the USB adapter cable.

Playing a USB Flash Memory Device (Canadian EX model and EX-L model without navigation system)

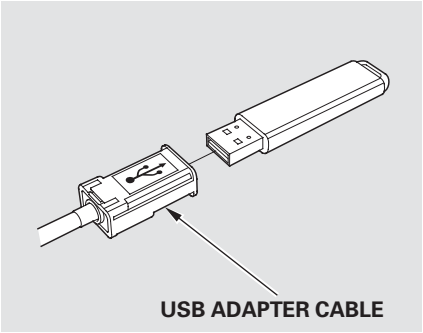

3. Connect the USB flash memory device to the USB connector correctly and securely.

When the USB flash memory device is connected, the USB indicator is shown in the display.

Text Data Display Function

Each time you press the TITLE button, the display mode shows you in sequence, the folder name, the file name, the artist name, the album name, the song name, or name off (which turns off the text display).

The display shows up to 16 characters of the selected data. If the text data has more than 16 characters, you will see the first 15 characters and the > indicator in the display. Press and hold the TITLE button until the next 16 characters are shown.

CONTINUED

Playing a USB Flash Memory Device (Canadian EX model and EX-L model without navigation system)

FOLDER SELECTION — To select a different folder, press the ▲/⮌ button or ▼/PLAY button. Press the ▲/⮌ button to skip to the next folder, and press the ▼/PLAY button to skip to the beginning of the previous folder.

To Change or Select Files
Use the SKIP button while a USB flash memory device is playing to change files.

SKIP — Each time you press the ⏭ SEEK (SKIP +) button, the system skips forward to the beginning of the next file. Press the ⏮ SEEK (SKIP −) button, to skip backward to the beginning of the current file. Press it again to skip to the beginning of the previous file.

To move rapidly within a file, press and hold either side (⏭ SEEK or ⏮ SEEK) of the SKIP button.

To Select a File from Folder and File Lists
You can also select a folder or file by using the VOL/SELECT knob. Push the VOL/SELECT knob to switch the display to the folder or file list, then turn the VOL/SELECT knob to select a folder or file. Press the VOL/SELECT knob to set your selection.

Pressing the ▲/⮌ button goes back to the previous display and pressing the TITLE button cancels this setting mode.

To Select Repeat, Random or Scan Mode:

You can select any type of repeat, random and scan modes by using the RPT button, RDM button, or SCAN button.

REPEAT — This feature continuously plays a file. To activate the repeat feature, press the RPT button. You will see “RPT” in the display. To turn it off, press and hold the RPT button.

CONTINUED

Playing a USB Flash Memory Device (Canadian EX model and EX-L model without navigation system)

FOLDER REPEAT — This feature replays all the files in the selected folder in the order they are stored. To activate the folder repeat feature, press the RPT button repeatedly. You will see “F-RPT” in the display. To turn it off, press and hold the RPT button.

Each time you press and release the RPT button, the mode changes from file repeat to folder repeat, then to normal play.

RANDOM — This feature plays all the files in random order. To activate the track random feature, press the RDM button. You will see “RDM” in the display. To turn it off, press and hold the RDM button.

FOLDER RANDOM — This feature plays the files in the current folder in random order. To activate the folder random feature, press the RDM button repeatedly. You will see “F-RDM” in the display. To turn it off, press and hold the RDM button.

Each time you press the RDM button, the mode changes from track random, play to folder random play, then to normal play.

SCAN — This feature samples all files in the current folder in the order they are stored. To activate the scan feature, press the SCAN button. You will see “SCAN” in the display. You will get a 10 second sampling of each file in the folder. Press and hold the SCAN button to get out of the scan mode and play the last file sampled.

FOLDER SCAN — This feature samples the first file in each folder in the order they are stored. To activate the folder scan feature, press the SCAN button repeatedly. You will see “F-SCAN” in the display. You will get a 10 second sampling of the first file in each folder. Press and hold the SCAN button to get out of the folder scan mode and play the last file sampled.

Each time you press and release the SCAN button, the mode changes from file scan to folder scan, then to normal play.

To Stop Playing a USB Flash Memory Device

To play the radio when a USB flash memory device is playing, press the FM, AM or XM button. If a disc is in the audio unit, press the CD/AUX or CD button to play the disc.

You can also press the MODE button on the steering wheel to change modes.

CONTINUED

Disconnecting a USB Flash Memory Device

You can disconnect the USB flash memory device at any time even if the USB mode is selected on the audio system. Always follow the USB flash memory device's instructions when you remove it.

When you disconnect the USB flash memory device while it is playing, the display shows "NO DATA."

If you reconnect the same USB flash memory device, the system will begin playing where it left off.

USB Flash Memory Device Error Messages

If you see an error message in the display, see page 193 .

USB Flash Memory Device Error Messages (Canadian EX model and EX-L model without navigation system)

If you see an error message on the audio display while playing a USB flash memory device, find the solution in the chart to the right. If you cannot clear the error message, take your vehicle to your dealer.

Error Message	Cause	Solution
USB ERROR	USB ROM Error	There is problem with the USB adapter unit.
BAD USB DEVICE PLEASE CHECK OWNERS MANUAL	Appears when an incompatible device is connected.	Disconnect the device. Then, turn the audio system off, and turn it on again. Do not reconnect the device that caused the error.
UNPLAYABLE FILE	Use of unsupported files	Appears when the files in the USB flash memory device are DRM or an unsupported format. This error message appears for about 3 seconds, then plays the next song.
USB NO SONG	No files in USB flash memory device	Appears when the USB flash memory device is empty or there are no MP3, WMA, or AAC files in the USB flash memory device. Save some MP3, WMA, or AAC files in the USB flash memory device.
UNSUPPORTED	Use of unsupported USB flash memory device	Appears when an unsupported device is connected. See page 185 for the specification information for the USB flash memory device. If it appears when the supported device is connected, reconnect the device.

Playing the AM/FM Radio (EX-L model with navigation system)

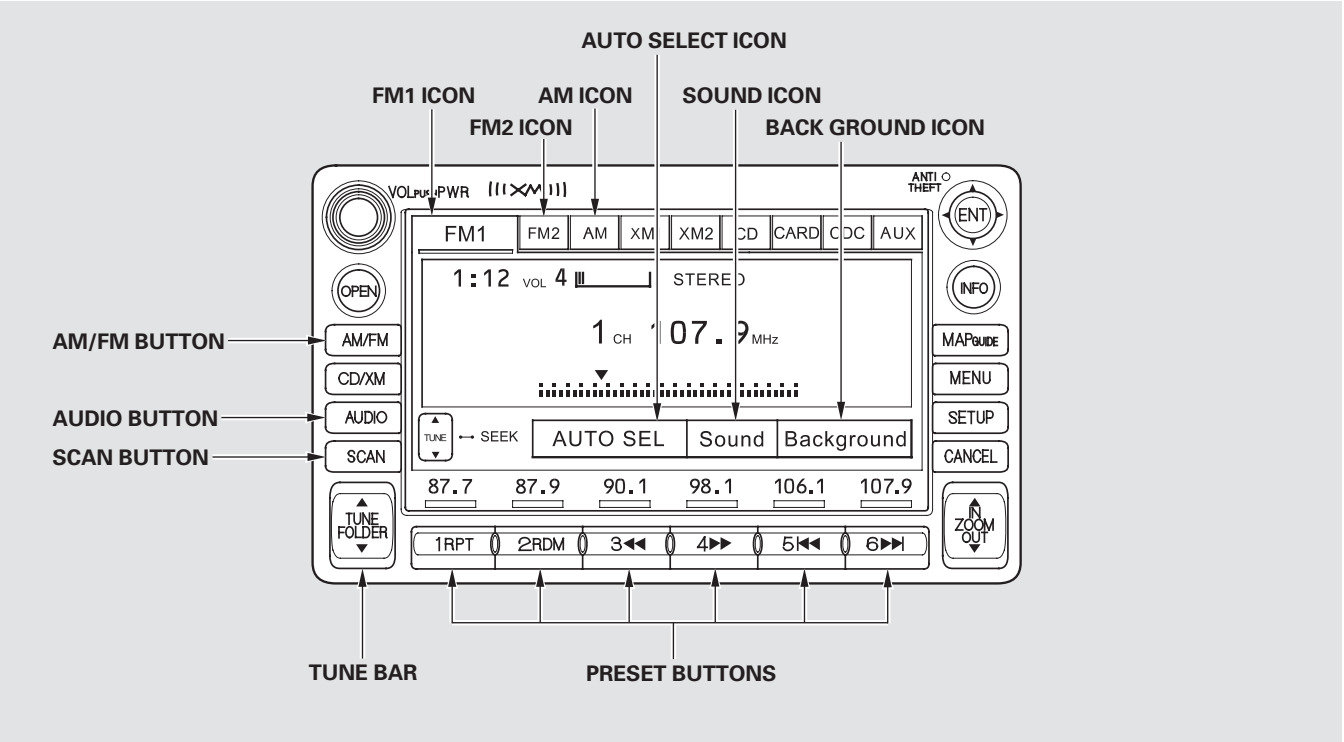

Playing the AM/FM Radio (EX-L model with navigation system)

Voice Control System
The audio system can also be operated by voice control. See the navigation system manual for complete details.

To Play the AM/FM Radio
The ignition switch must be in the ACCESSORY (I) or ON (II) position. Turn the system on by pushing the power/volume knob or the AM/FM button. Adjust the volume by turning the power/volume knob.

Pushing the AUDIO button will also turn on the system.

You can also operate the audio system without using the control icons on the audio screen. Use the control buttons on the left side of the screen. The status bar appears on the bottom of the screen each time you operate any of the control buttons. On the navigation screen, you can also see audio information by touching the AUDIO INFO icon on the lower half of the screen.

The band and frequency that the radio was last tuned to are displayed. To change bands, press the AM/FM button, or touch the desired band icon (FM1, FM2, AM, XM1, or XM2). On the FM band, STEREO will be displayed if the station is broadcasting in stereo. Stereo reproduction on AM is not available.

For information on XM Radio, see page 200 .

To Select a Station
You can use any of five methods to find radio stations on the selected band: tune, seek, scan, the preset buttons, and auto select.

TUNE — Use the TUNE bar to tune the radio to a desired frequency. Press the ▲ side of the bar to tune to a higher frequency, and press the ▼ side to tune to a lower frequency.

Press and hold the ▲ or ▼ side of the TUNE bar until you hear two beeps to change the frequency rapidly. Release the bar when the display reaches the desired frequency.

CONTINUED

Playing the AM/FM Radio (EX-L model with navigation system)

SEEK — The seek function searches up and down from the current frequency to find a station with a strong signal. To activate it, press and hold the ▲ or ▼ side of the TUNE bar until you hear a beep, then release it.

SCAN — The scan function samples all stations with strong signals on the selected band. To activate it, press the SCAN button, then release it. You will see SCAN in the display. When the system finds a strong signal, it will stop and play that station for about 10 seconds. If you do nothing, the system will then scan for the next strong station and play it for 10 seconds. When it plays a station you want to listen to, press the SCAN button again.

Preset — Each preset button can store one frequency on AM and two frequencies on FM.

1. Select the desired band, AM or FM. You can store one frequency on FM1, and one frequency on FM2 with each preset button.
2. Use the tune, seek, or scan function to tune the radio to a desired station.
3. Pick a preset button, and hold it until you hear a beep.
4. Repeat steps 1 through 3 to store a total of six stations on AM and twelve stations on FM.

Each preset button's frequency is shown on the bottom of the audio display.

Playing the AM/FM Radio (EX-L model with navigation system)

AUTO SELECT — If you are traveling and can no longer receive your preset stations, you can use the auto select feature to find stations in the local area.

Press the AUDIO button to view the audio control icons, then touch the AUTO SEL icon. You will see AUTO SEL flashing in the display, and the system goes into scan mode for several seconds. It stores the frequencies of six AM, and twelve FM stations in the preset buttons.

You will see a “0” displayed after pressing a preset button if auto select cannot find a strong station for every preset button.

If you do not like the stations auto select has stored, you can store other frequencies on the preset buttons as previously described.

To turn off auto select, press the AUTO SEL icon. This restores the presets you originally set.

For information on AM/FM radio frequencies and reception, see page 250 .

Playing the AM/FM Radio (EX-L model with navigation system)

Adjusting the Sound

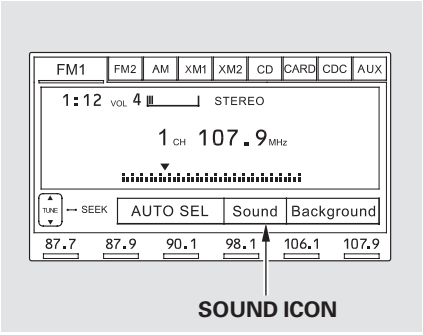

You can adjust the sound on the navigation screen. To adjust the sound, push the AUDIO button, then enter the sound grid by touching the SOUND icon on the display.

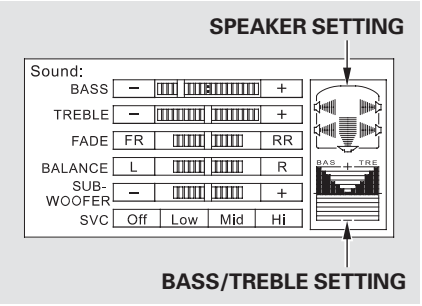

BASS — Adjusts the bass.

TREBLE — Adjusts the treble. To adjust the treble and bass, touch either [+] or [−] on the treble or bass adjustment bar. The adjustment bar on the lower right display shows you the current setting.

FADER — Adjusts the front-to-back strength of the sound. To adjust the front/rear fader, touch the FR or RR icon.

BALANCE — Adjusts the side-to-side strength of the sound. To adjust the left/right balance, touch the L or R icon.

SUBWOOFER — Adjusts the strength of sound from the subwoofer speaker. To adjust the sound strength, touch [+] or [−] on each side of the adjustment bar.

The right upper display shows you the current setting of the sound strength coming from each speaker.

SVC (speed-sensitive volume compensation) — The SVC mode controls the volume based on vehicle speed. The faster you go, the louder the audio volume becomes. As you slow down, the audio volume decreases. Touch the appropriate icon (Low, Mid, Hi, Off) to select the mode.

Playing the AM/FM Radio (EX-L model with navigation system)

If you feel the sound is too loud, choose low. If you feel the sound is too quiet, choose Hi.

You can also select the icon with the joystick. Move it up and down to move the highlighting and scroll through lists. Select the icon, then move the joystick to left or right to change the setting.

The system will return to the audio display about 5 seconds after you stop adjusting a mode.

Screen Mode

You can select the background screen to display the sound level. There are three screen modes: level (the sound level is shown with the vertical bars), spectrum analysis (the sound level appears as ripples of water), and off. Each time you touch the background icon, the display changes.

Audio System Lighting

You can use the instrument panel brightness control knob to adjust the illumination of the control panel (see page 79). The audio system illuminates when the parking lights are on, even if the radio is turned off.

Playing the XM® Radio (EX-L model with navigation system)

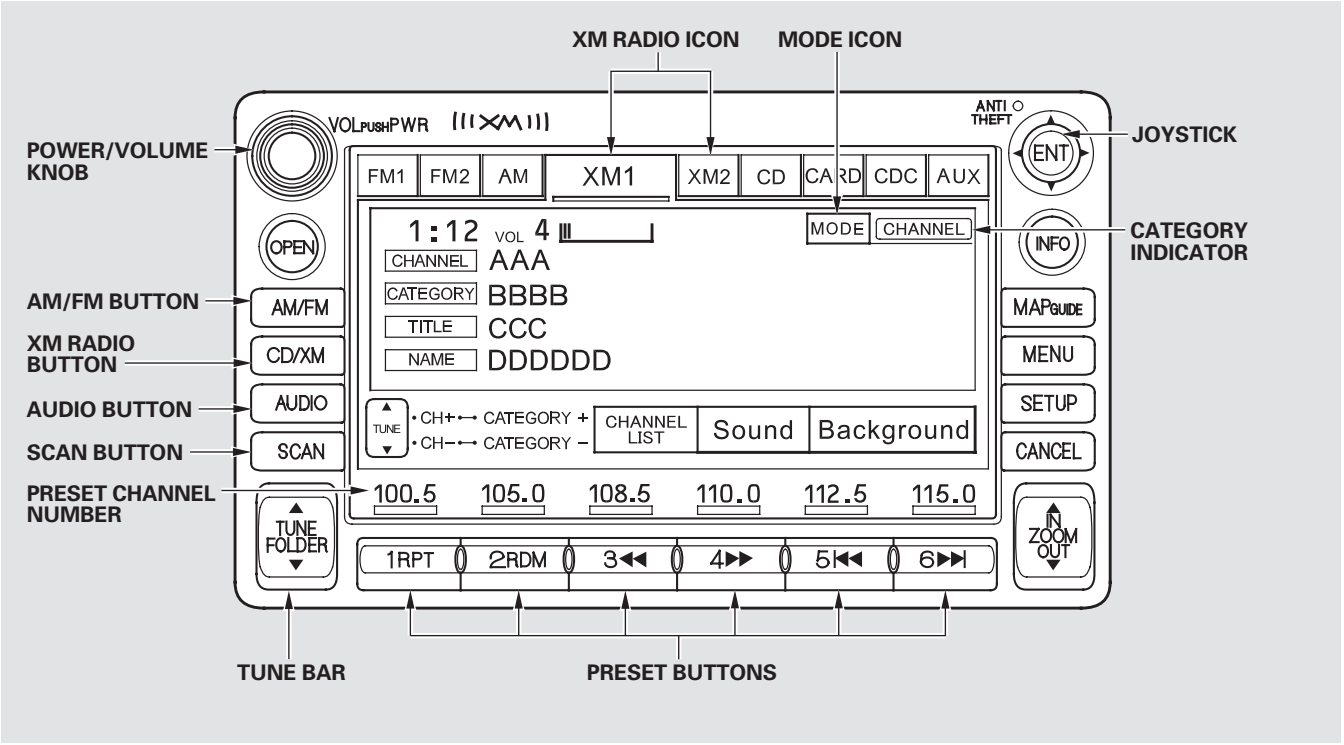

Playing the XM® Radio (EX-L model with navigation system)

Your vehicle is capable of receiving XM® Radio anywhere in the United States and Canada, except Hawaii, Alaska, and Puerto Rico. XM is a registered trademark of Sirius XM Radio®, Inc. and XM CANADA® is a registered business name of Canadian Satellite Radio Inc.

XM Radio receives signals from two satellites to produce clear, high-quality digital reception. It offers many channels in several categories. Along with a large selection of different types of music, XM Radio allows you to view channel and category selections in the display. When you press and hold the AUDIO button, the display also shows all XM information.

Operating the XM Radio
To listen to XM Radio, turn the ignition switch to the ACCESSORY (I) or the ON (II) position. Push the power/volume knob to turn on the audio system, and press the CD/XM button. Adjust the volume by turning the knob. The last channel you listened to will show in the display.

You can also change to the XM Radio while you are listening to an FM station, AM station, disc, PC card, etc., by touching the XM1 or XM2 icon on the audio display.

You can also operate the radio using the control buttons on the left side of the screen. The status bar appears on the bottom of the screen each time you press any of the control buttons. On the navigation screen, you can also see the audio information by touching the AUDIO INFO icon on the lower part of the screen.

MODE — To switch between channel mode and category mode, touch the MODE icon. In channel mode, you can select all of the available channels. In category mode, such as Jazz, Rock, Classical, etc., you can select all of the channels within that category. Each time you touch and release the MODE icon, the display changes between the channel mode and the category mode.

CONTINUED

Playing the XM® Radio (EX-L model with navigation system)

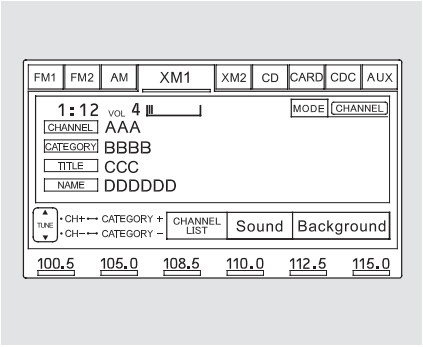

On the audio display, you will see the selected CHANNEL (number), CATEGORY, NAME (artist name), and TITLE (music title).

You may experience periods when XM Radio does not transmit the artist's name and song title information. If this happens, there is nothing wrong with your system.

TUNE — Press the TUNE bar to change channel selections. Press ▲ for higher numbered channels and ▼ for lower numbered channels. In the category mode, you can only select channels within that category.

CATEGORY — Press and hold either side of the TUNE bar (⏮ or ⏭) until you hear a beep to select another category.

SCAN — The scan function gives you a sampling of all channels while in the channel mode. In the category mode, only the channels within that category are scanned. To activate scan, press the SCAN button. The system plays each channel in numerical order for a few seconds, then selects the next channel. When you hear a channel you want to listen to, press the button again.

Preset — You can store up to 12 preset channels using each preset button or preset icons on the screen. Each preset button or icon stores one channel from the XM1 band and one channel from the XM2 band.

To store a channel:

1. Press the XM button. Either XM1 or XM2 will show in the display.

2. Use the tune, seek, or scan function to tune to a desired channel.

In category mode, only channels within that category can be selected. In channel mode, all channels can be selected.

3. Pick the preset button (icon) you want for that channel. Press and hold the button (icon) until you hear a beep.

4. Repeat steps 2 and 3 to store the first six channels.

5. Press the XM button again or touch the other XM icon (XM1 or XM2) on the audio display. Store the next six channels using steps 2 and 3.

Once a channel is stored, press and release the proper preset button (icon) to tune to it. Each preset button's channel is shown on the bottom of the audio display.

XM Radio Display Messages

"LOADING" — XM is loading the audio or program information.

"OFF AIR" — The channel currently selected is no longer broadcasting.

"UPDATING" — The encryption code is being updated. Wait until the encryption code is fully updated. Channels 0 and 1 should still work normally.

"NO SIGNAL" — The signal is currently too weak. Move the vehicle to an area away from tall buildings, and with an unobstructed view of the southern horizon.

" - - - - " — The selected channel number does not exist or is not part of your subscription.

"NO INFO" — This channel has no artist or title information at this time.

"ANTENNA" — There is a problem with the XM antenna. Please consult your dealer.

CONTINUED

Playing the XM® Radio (EX-L model with navigation system)

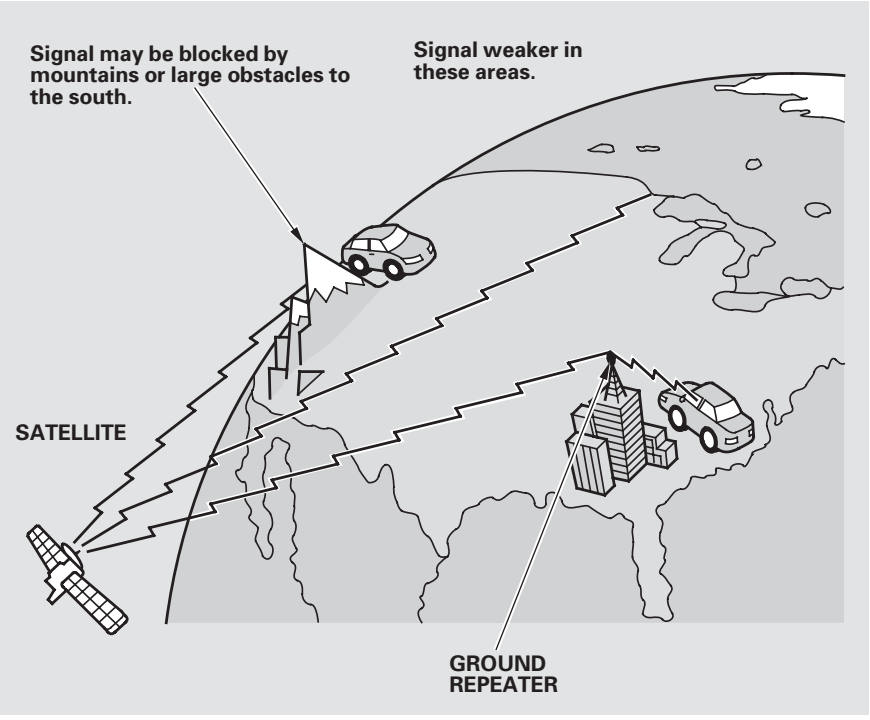

The XM satellites are in orbit over the equator; therefore, objects south of the vehicle may cause satellite reception interruptions. To help compensate for this, ground-based repeaters are placed in major metropolitan areas.

Satellite signals are more likely to be blocked by tall buildings and mountains the farther north you travel from the equator. Carrying large items on a roof rack can also block the signal.

Depending on where you drive, you may experience reception problems. Interference can be caused by any of these conditions:

- Driving on the north side of an east/west mountain road.
- Driving on the north side of a large commercial truck on an east/west road.

- Driving in tunnels.
- Driving on a road beside a vertical wall, steep cliff, or hill to the south of you.
- Driving on the lower level of a multi-tiered road.
- Driving on a single lane road alongside dense trees taller than 50 ft. (15 m) to the south of you.
- Large items carried on a roof rack.

There may be other geographic situations that could affect XM Radio reception.

As required by the FCC:
Changes or modifications not expressly approved by the party responsible for compliance could void the user's authority to operate the equipment.

Receiving XM Radio Service
If your XM Radio service has expired or you purchased your vehicle from a previous owner, you can listen to a sampling of the broadcasts available on XM Radio. With the ignition switch in the ACCESSORY (I) or ON (II) position, push the power/volume knob to turn on the audio system and press the CD/XM button. A variety of music types and styles will play.

If you decide to purchase XM Radio service, contact XM Radio at *www.xmradio.com*, or at 1-800-852-9696. In Canada, contact XM CANADA® at *www.xmradio.ca*, or at 1-877-209-0079. You will need to give them your radio I.D. number and your credit card number. To get your radio I.D. number, press the TUNE bar until "0" appears in the display. Your I.D. will appear in the display.

After you've registered with XM Radio, keep your audio system in the XM radio mode while you wait for activation. This should take about 30 minutes.

While waiting for activation, make sure your vehicle remains in an open area with good reception. Once your audio system is activated, you'll be able to listen to XM Radio broadcasts. XM Radio will continue to send an activation signal to your vehicle for at least 12 hours from the activation request. If the service has not been activated after 36 hours, contact XM® Radio. In Canada, contact XM CANADA®.

Playing a Disc (EX-L model with navigation system)

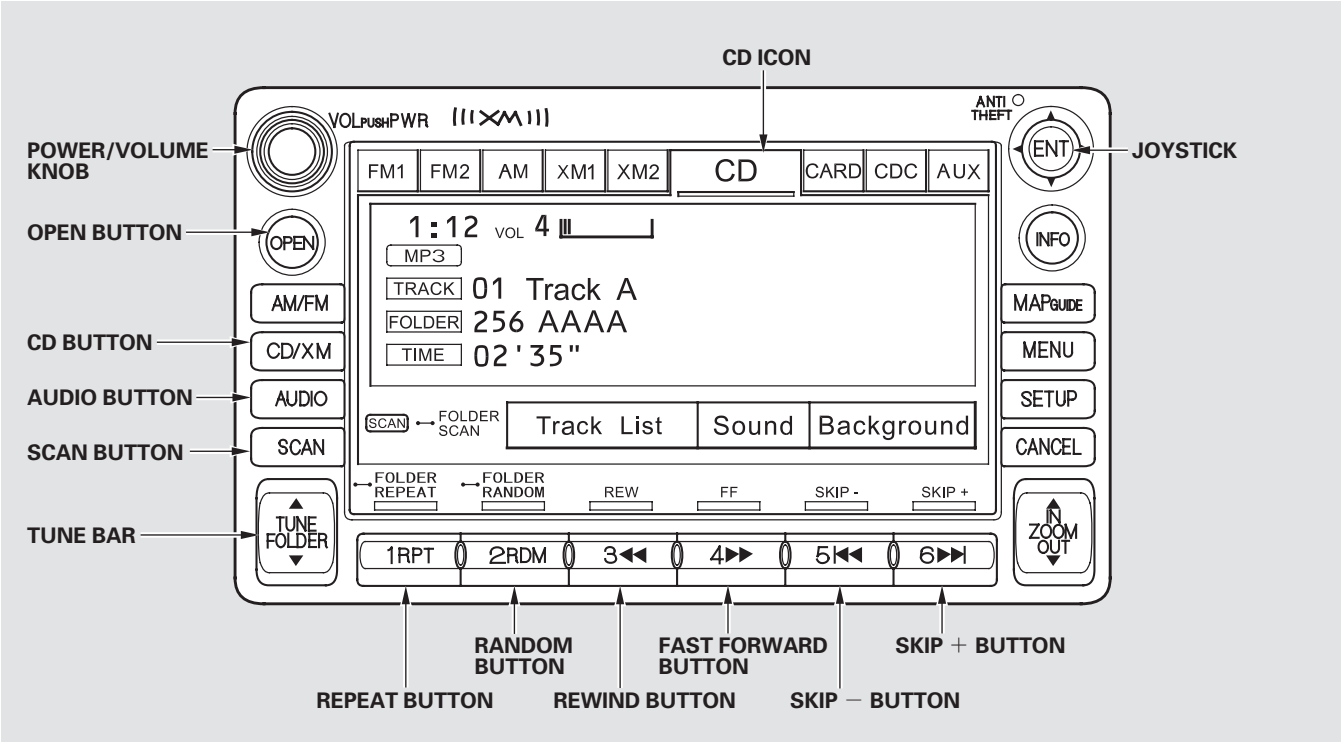

Playing a Disc (EX-L model with navigation system)

To Play a Disc
(In-dash single player)
You operate the in-dash disc player with the same controls used for the radio. To load or play discs, the ignition switch must be in the ACCESSORY (I) or ON (II) position.

Your vehicle also has a CD changer that operates with the same functions as the in-dash disc player (see page 215).

NOTICE

Do not use discs with adhesive labels. The label can curl up and cause the disc to jam in the unit.

This audio system can also play CD-Rs and CD-RWs compressed in MP3 or WMA formats. When playing a disc in MP3, you will see “MP3” on the screen. In WMA format, “WMA” will appear on the screen. You can select up to 255 folders and play up to 999 tracks. If the disc has a complex structure, it takes a while to read the disc before the system begins to play it.

Video CDs and DVDs do not work in this unit.

Depending on the software the files were made with, it may not be possible to play some files, or display some text data.

NOTE:
If a file on an MP3 or WMA disc is protected by digital rights management (DRM), the audio unit displays CD FORMAT, and then skips to the next file.

CONTINUED

Playing a Disc (EX-L model with navigation system)

To Load a Disc

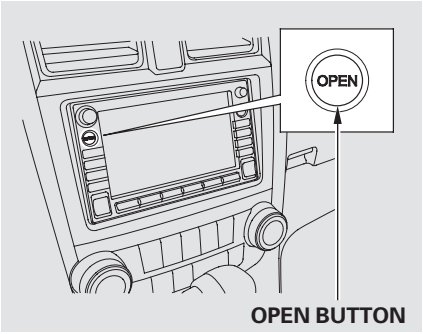

The in-dash disc player is behind the navigation screen. To use the disc player, press the OPEN button beside the screen. The screen folds back, and the disc slot appears.

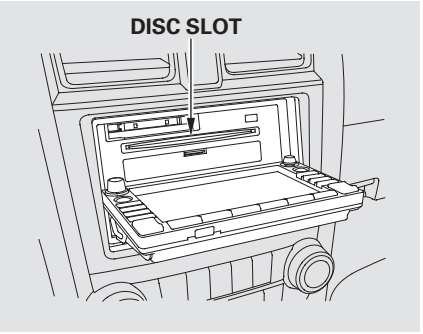

Insert a disc about halfway into the disc slot. The drive will pull the disc in the rest of the way and begin to play it.

You cannot load and play 3-inch (8-cm) discs in this system.

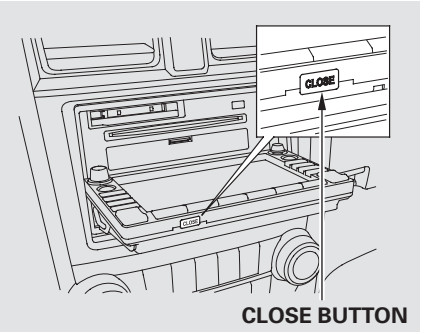

To return the screen to the upright position, press the CLOSE button on the edge of the screen panel. Do not use the folded down screen as a tray. If you put a cup, for example, on the screen, the liquid inside the cup may spill on the screen when you go over a bump.

Playing a Disc (EX-L model with navigation system)

Push the AUDIO button beside the screen to show the audio display and operate the disc player.

You can also operate the audio system without using the control icons on the audio screen. Press the CD button. The status bar appears on the bottom of the screen. On the navigation screen, you can see the audio information whenever you touch the AUDIO INFO icon on the lower portion of the screen.

When playing a CD recorded with text data, the track, album, and artist name are shown on the audio display. When playing a disc in MP3 or WMA, the folder number and name, the file number and name, the artist name, and the elapsed time are shown. The system will continuously play a disc until you change modes. If the disc was not recorded with text data, it will not be displayed.

To Change or Select Tracks/Files

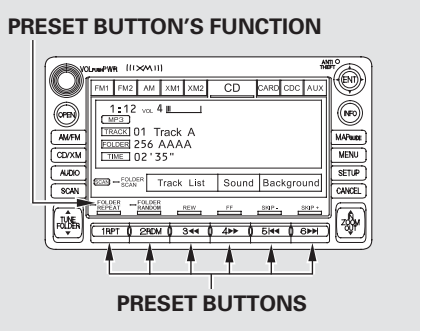

You can use the preset buttons while a disc is playing to select passages and change tracks (files in MP3 or WMA mode). Each preset button's function is shown on the bottom of the screen.

You can also select an icon with the joystick. Move it to left, right, up, or down to change the highlighting and scroll through lists. Then press ENT on the top of the joystick to select the icon.

SKIP — Each time you press and release ►►| (preset 6 button), the player skips forward to the beginning of the next track (file in MP3 or WMA mode). Press and release |◄◄ (preset 5 button), to skip backward to the beginning of the current track. Press it again to skip to the beginning of the previous track.

FF/REW — To move rapidly within a track/file, press and hold
►► (preset 4 button) or
◄◄ (preset 3 button).

CONTINUED

Playing a Disc (EX-L model with navigation system)

In MP3 or WMA mode
FOLDER SELECTION — To select a different folder, press either side of the TUNE bar to move to the beginning of the next folder. Press the ▲ side of the TUNE bar to skip to the next folder, and the ▼ side to move to the beginning of the current folder. Press it again to skip to the beginning of the previous folder.

TRACK REPEAT (FILE REPEAT) — To continuously replay a track (file in MP3 or WMA mode), press and release the RPT button (preset 1 button). You will see TRACK REPEAT in the display. Press the RPT button again to turn it off.

In MP3 or WMA mode
FOLDER REPEAT — This feature, when activated, replays all files on the selected folder in the order they are compressed. To activate folder repeat, press and hold the RPT button (preset 1 button) for 2 seconds. You will see FOLDER REPEAT in the display. The system continuously replays the current folder. Press the RPT button again to turn it off. Selecting a different folder with the TUNE bar also turns off folder repeat.

TRACK RANDOM (Random within a disc/folder) — This feature plays the tracks/files within a disc in random order. To activate track random, press and release the RDM button (preset 2 button). You will see TRACK RANDOM in the display. Press the RDM button again to return to normal play.

In MP3 or WMA mode
FOLDER RANDOM — This feature, when activated, plays all files in the selected folder in random order, rather than in the order they are compressed. To activate folder random, press and hold the RDM button. You will see FOLDER RANDOM in the display. The system then selects and plays files randomly. This continues until you deactivate folder random by pressing the RDM button again, or if you select a different folder with the TUNE bar.

SCAN (TRACK/FILE SCAN) — The scan function samples all tracks (files in MP3 or WMA) in the order they were recorded. To activate scan, press and release the SCAN button. You will see TRACK SCAN in the display. You will get a 10 second sampling of each track/file on the disc. Press the SCAN button to get out of scan mode and play the last track/file sampled.

Pressing either SKIP button (preset 5 button or 6 button) also turns off scan.

In MP3 or WMA mode

FOLDER SCAN — This feature, when activated, samples the first file in each folder on the disc in order. To activate folder scan, press and hold the SCAN button for 2 seconds. You will see FOLDER SCAN in the display.

The system plays the first file in each folder for about 10 seconds. If you do nothing, the system then plays the first file in each folder for 10 seconds each. After playing the first file of the last folder, the system goes to normal play.

Pressing either SKIP button (preset 5 or 6), or selecting a different folder with the TUNE bar, or pressing the SCAN button, also turns off folder scan.

Using a Track List

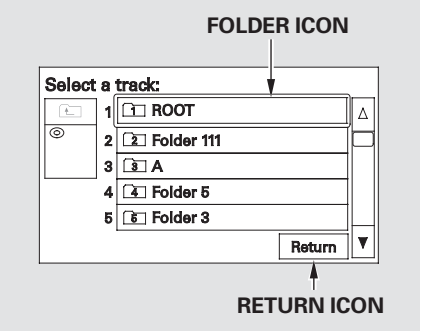

You can also select a track/file directly from the folder and file lists on the audio display. Press the AUDIO button to show the audio display.

Touch the Track List icon to switch the display to the folder list, then select and touch a desired folder.

CONTINUED

Playing a Disc (EX-L model with navigation system)

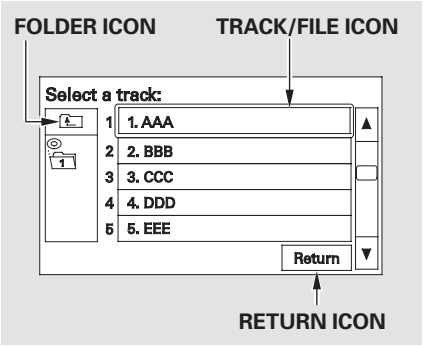

The display changes to the file list. Then, select and touch a desired file.

Touch the folder icon on the upper left of the screen to move to the parent folder.

To scroll through the display, touch the ▲ or ▼ icon on the side of the screen. To go back to the previous display, touch the Return icon on the screen.

To select a desired icon with the joystick, move it in the appropriate direction, then press ENT.

Press the AUDIO button to go back to the normal audio playing display. Pressing the CANCEL button goes back to the previous screen, and pressing the MAP button cancels the audio control display on the screen.

When playing a CD recorded with text data, each track name is shown on the audio display. With a disc recorded in MP3 or WMA, the folder number and the location are also displayed.

If the disc was not recorded with text data, only the track number is shown.

To Stop Playing a Disc

To play the radio when a disc is playing, press the AM/FM button or touch the FM1, FM2, AM, XM1, or XM2 icon. If a PC card is in the audio unit, touch the CARD icon to play the PC card. If a CD or CDs are loaded in the CD changer, touch the CDC icon to play the CD changer. Press the CD button again or touch the CD icon to switch back to the disc player.

You can also press the MODE button on the steering wheel to change modes.

If you turn the system off while a disc is playing, either with the power/volume knob or by turning off the ignition switch, the disc will stay in the drive. When you turn the system back on, the disc will begin playing where it left off.

Removing a Disc

To remove a disc from the audio unit, fold back the screen by pressing the OPEN button (see page 206). Press the disc eject button (⏏) to remove the disc. If you eject the disc, but do not remove it from the slot, the system will automatically reload it after 10 seconds and put it in pause mode. To begin playing, press the CD/XM button.

To return the screen to the upright position, press the CLOSE button.

You cannot close the screen if a disc is partially inserted into its slot.

You can also eject the disc when the ignition switch is off.

Protecting Discs

For information on how to handle and protect discs, see page 252 .

Disc Player Error Messages (EX-L model with navigation system)

The chart on the right explains the error messages you may see in the display while playing a disc.
If you see an error message in the display while playing a disc, press the eject button. After ejecting the disc, check it for damage or deformation. If there is no damage, insert the disc again.
For additional information on damaged discs, see page 253 .

The audio system will try to play the disc. If there is still a problem, the error message will reappear. Press the eject button, and pull out the disc. Insert a different disc. If the new disc plays, there is a problem with the first disc. If the error message cycle repeats and you cannot clear it, take your vehicle to a dealer.

Error Message	Cause	Solution
DISC ERROR	FOCUS Error	Press the eject button, and pull out the disc. Check if it is inserted correctly in the disc player. Make sure the disc is not scratched or damaged. For more information see page 253 .
MECH ERROR	Mechanical Error	Press the eject button, and pull out the disc. Check the disc for damage or deformation. For more information see page 253 . If the disc cannot be pulled out, or the error message does not disappear after the disc is ejected, see your dealer.
CHECK DISC	TOC Error	Press the eject button, and pull out the disc. Check the disc for damage or deformation.
HEAT ERROR	High Temperature	Will disappear when the temperature returns to normal.

CD Changer (EX-L model with navigation system)

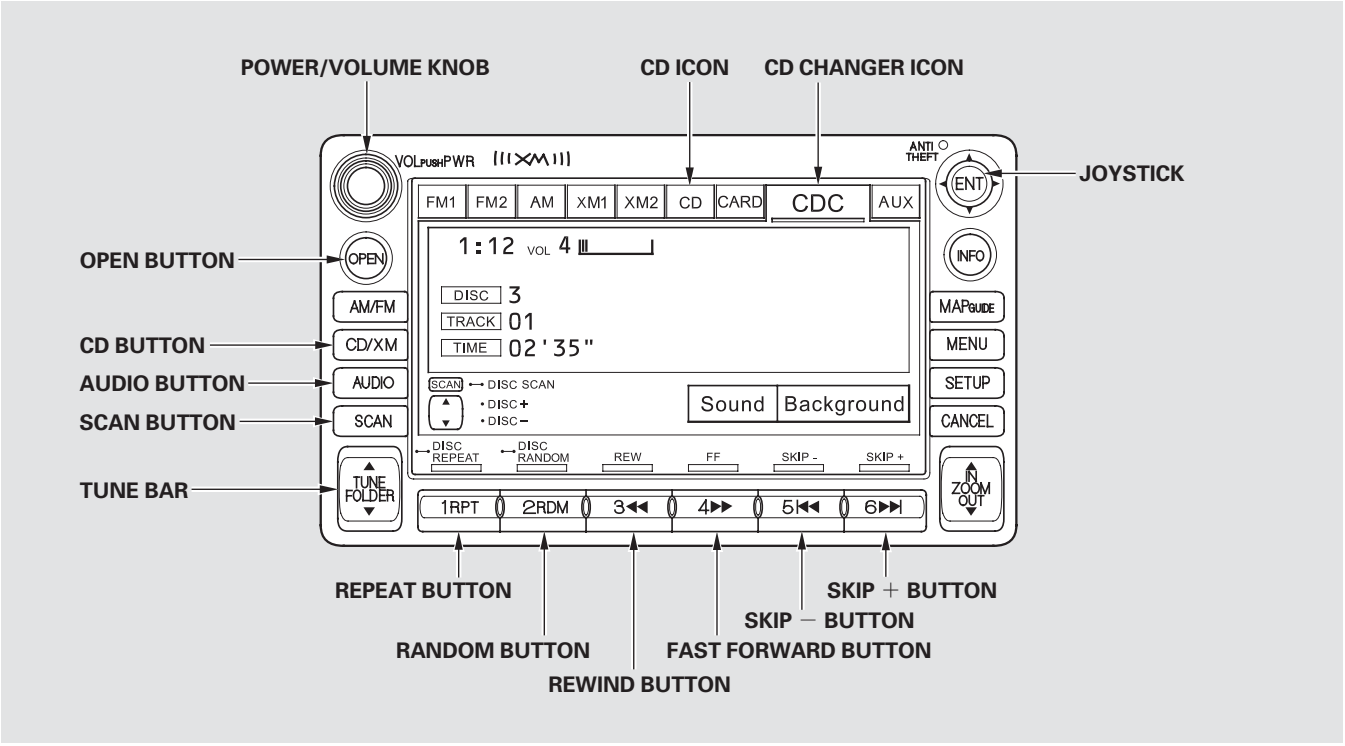

CD Changer (EX-L model with navigation system)

Loading CDs in the Changer
Your vehicle has the CD changer in the center console.

CD-R, CD-RW discs, and CDs compressed in MP3 and WMA will not work in this unit. Video CDs and DVD discs also will not work.

Do not spill any liquids on the center console. Spilled liquids can damage electrical components in the CD changer.

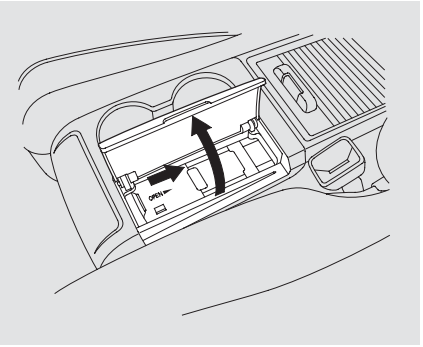

1. Open the center console cover, then slide open the CD changer cover by pulling it rearward.

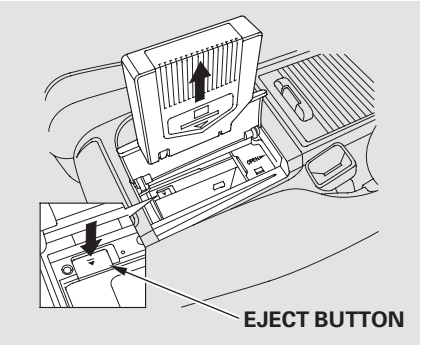

2. Push the EJECT button to remove the CD magazine. The magazine will pop up automatically.

CD Changer (EX-L model with navigation system)

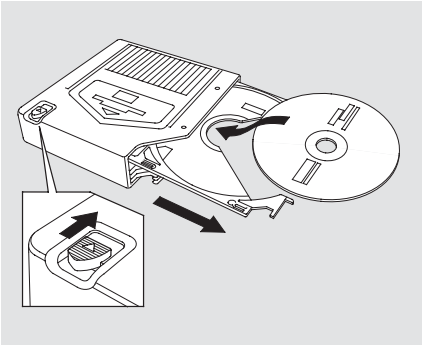

3. To install a CD into the magazine, push the button while pulling out on the tab.

4. Put a CD on the tray with the printed surface facing up as shown.

5. Reinstall the tray in the magazine. Repeat this procedure to open the other five trays.

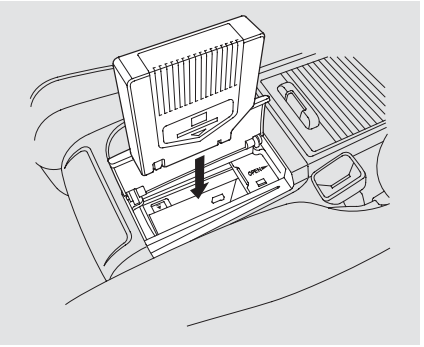

6. Store all six trays in the magazine, and reinstall the magazine in the CD changer as shown.

7. Make sure to slide the CD changer cover closed until it clicks.

To remove CDs from the CD changer, refer to the loading procedure.

CD Changer (EX-L model with navigation system)

To Play a CD
To play CDs, the ignition switch must be in the ACCESSORY (I) or ON (II) position.

You operate the CD changer with the same controls used for the in-dash disc player or the radio. To select the CD changer, touch the CDC icon. The disc and track numbers are displayed. The system will continuously play a CD until you change modes.

NOTICE

Do not use CDs with adhesive labels. The label can curl up and cause the CD to jam in the unit.

To select a different disc, use the preset buttons (5 or 6). Press and release the Preset 5 (DISC −) button to select the previous disc or Preset 6 (DISC +) to select the next disc in sequence. Pressing the ▲ or ▼ side of the TUNE bar also changes the disc. If you select an empty position in the CD changer, the system will try to load the CD in the next available slot.

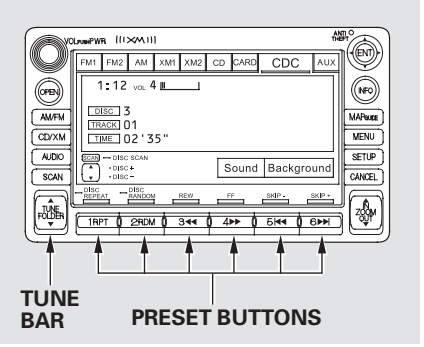

You can use the preset buttons while a disc is playing to select passages and change tracks. Each preset button function is shown on the bottom of the screen.

CD Changer (EX-L model with navigation system)

SKIP — Push the ►►I button (preset 6) to play the next track on the disc. Push the I◄◄ button (preset 5) once to replay the track in play; press it twice to replay the previous track.

FF/REW — To move more rapidly within a track, press and hold the ►► (preset 4) or ◄◄ (preset 3) button.

REPEAT (Track Repeat) — To continuously replay a track, press and release the RPT button (preset 1). You will see TRACK REPEAT in the display. Press the RPT button again to turn it off.

DISC REPEAT — To continuously replay the current CD, press and hold the RPT button (preset 1) until you see the DISC REPEAT in the display. Press it again to turn it off.

RANDOM (Track Random) — Press and release the RDM button (preset 2) to play the tracks in random order. You will see TRACK RANDOM in the display. Press the RDM button again to return to normal play.

DISC RANDOM — To play all tracks in each CD in random order, press and hold the RDM button (preset 2) until you see DISC RANDOM in the display. Press the RDM button again to return to normal play.

SCAN (Track Scan) — The SCAN function samples all the tracks on the selected disc in the order they are recorded. To activate it, press and release the SCAN button. You will see TRACK SCAN in the display, and you will get a 10 second sampling of each track on the selected CD. Press the SCAN button again to get out of scan mode.

DISC SCAN — Press and hold the SCAN button to get a 10 second sampling of the first song of each disc in the CD changer. You will see DISC SCAN in the display. Press and hold the button again to turn it off.

CD Changer (EX-L model with navigation system)

To Stop Playing a CD
To play the radio when a disc is playing, press the AM/FM button or the CD/XM button. Touch the USB icon to switch to an appropriate audio unit (if it is connected to the USB adapter cable).

If there is a PC card in the audio unit, touch the CARD icon to switch to the PC card while a CD is playing.

Touch the CDC icon again to play the CD in the CD changer.

You can also press the MODE button on the steering wheel to change modes.

If you turn the system off while a CD in the CD changer is playing, the CD will stay in the drive. When you turn the system back on, the CD will be in pause mode. Touch the CDC icon on the audio screen. The CD will begin playing where it left off.

CD Changer Error Messages (EX-L model with navigation system)

The chart on the right explains the error messages you may see in the display while playing a disc.
If you see an error message in the display while playing a disc, press the eject button. After ejecting the disc, check it for damage or deformation. If there is no damage, insert the disc again.
For additional information on damaged discs, see page 253 .

The audio system will try to play the disc. If there is still a problem, the error message will reappear. Press the eject button, and pull out the disc. Insert a different disc. If the new disc plays, there is a problem with the first disc. If the error message cycle repeats and you cannot clear it, take your vehicle to a dealer.

Error Message	Cause	Solution
DISC ERROR	FOCUS Error	The disc is pulled out. Check if it is inserted correctly in the disc player. Make sure the disc is not scratched or damaged. For more information see page 253.
MECH ERROR	Mechanical Error	Press the eject button, and pull out the disc. Check the disc for damage or deformation. For more information see page 253. If the disc cannot be pulled out, or the error message does not disappear after the disc is ejected, see your dealer.

Playing a PC card (EX-L model with navigation system)

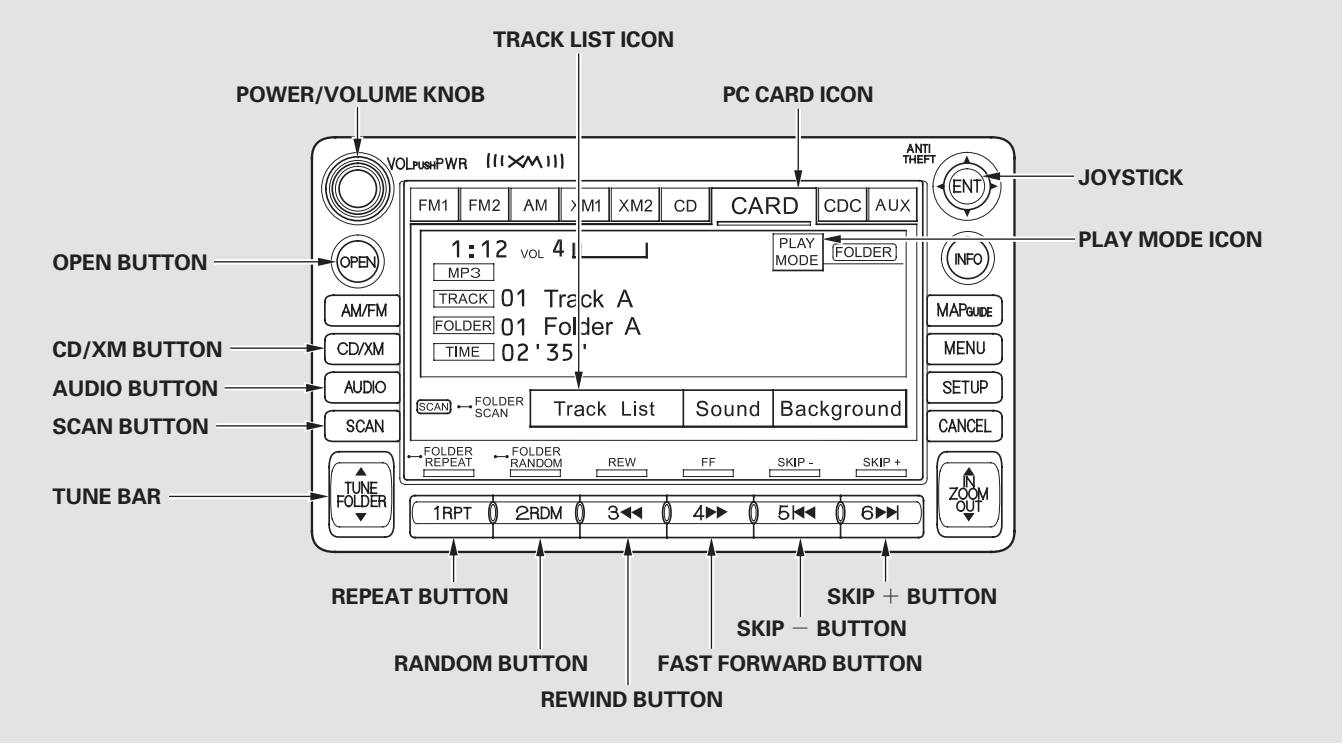

Playing a PC card (EX-L model with navigation system)

To Play a PC Card
You operate the PC card player with the same controls used for the radio and the disc player. To load or play a card, the ignition switch must be in the ACCESSORY (I) or ON (II) position.

The PC card player reads and plays cards in MP3 or WMA formats. Depending on the format, the screen will indicate “MP3” or “WMA” when a card is playing. The card limit of the player is 255 folders and 999 tracks. If the card has a complex structure, it takes some time for the system to begin playing it.

Based on PCMCIA 2.1/JEIDA 4.2, the recommended PC cards for the PC card reader are:

CompactFlash
Flash ATA
SD memory card

Always use the recommended memory card with the appropriate adapter (if an adapter is needed). Some memory cards will not work in this unit.

NOTE:
- When you insert a PC card into the slot, make sure you put it in straight. If you cannot insert it, remove it, and insert again.
- Do not keep PC cards in the vehicle. Direct sunlight and high heat will damage them.
- To avoid damaging the card reader, do not insert hard disc drive cards into the PC card slot.
- You cannot close the screen (move it to the upright position) until the PC card is inserted all the way into its slot or removed.
- Never insert foreign objects into the PC card slot.

CONTINUED

Playing a PC card (EX-L model with navigation system)

Depending on the software the files were made with, it may not be possible to play some files, or display some text data.

In WMA format, DRM (digital rights management) files cannot be played. If the system finds a DRM file, it skips that file and plays the next available folder or file.

Loading a PC Card

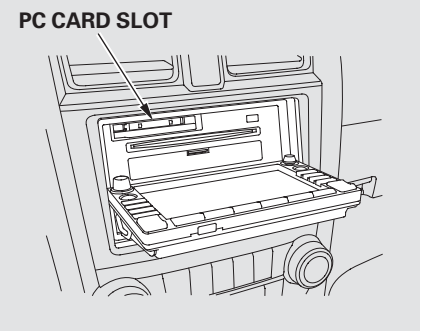

The PC card slot is behind the navigation screen. To use the PC card player, press the OPEN button beside the screen. The screen folds back, and the PC card slot appears.

Insert a PC card straight into the slot. The drive will read the PC card and begin to play it.

Return the screen to the upright position by pressing the CLOSE button on the edge of the screen panel.

Push the AUDIO button beside the screen to show the audio display and operate the PC card player.

You can also operate the audio system without using the control icons on the audio screen. Press any of the appropriate control buttons. The status bar appears on the bottom of the screen. On the navigation screen, you can see the audio information whenever you touch the AUDIO INFO icon on the screen.

Playing a PC card (EX-L model with navigation system)

There are three play modes: Folder, Artist, and Album. Touch the PLAY MODE icon, then choose one of the modes by touching its icon. When a mode is selected, it is highlighted in blue.

- Folder mode plays tracks in the order they were added to the card.
- Artist mode plays tracks in alphabetical order, by artist and song title.
- Album mode plays albums (folders) in alphabetical order.

If play mode information was not included in the tracks/files when they were added to the card, it will not be displayed on the screen.

To Select a Play Mode

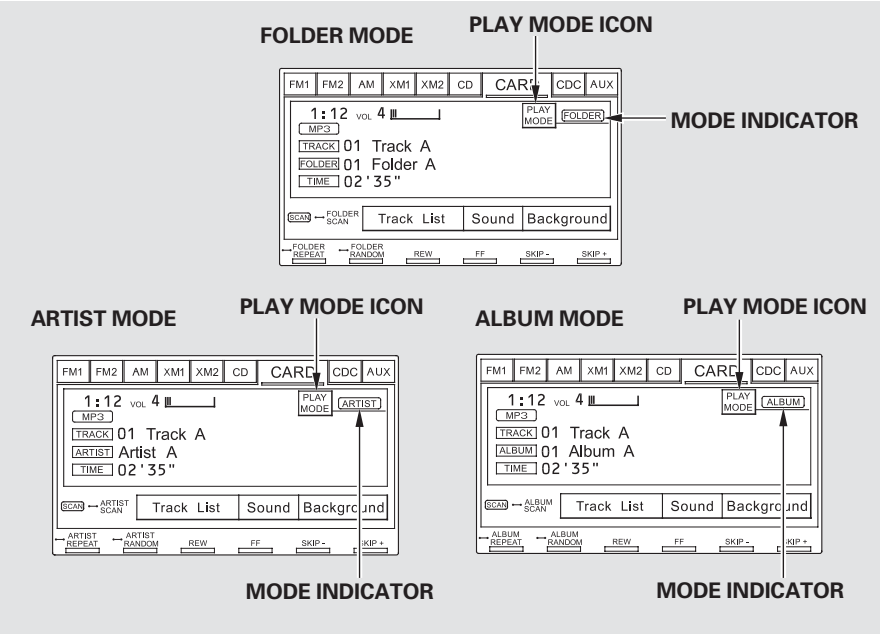

CONTINUED

Playing a PC card (EX-L model with navigation system)

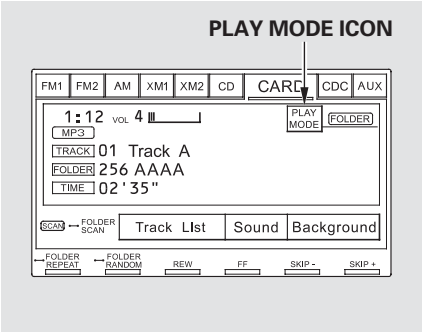

To select a play mode, push the AUDIO button to show the audio display, then touch the PLAY MODE icon on the display.

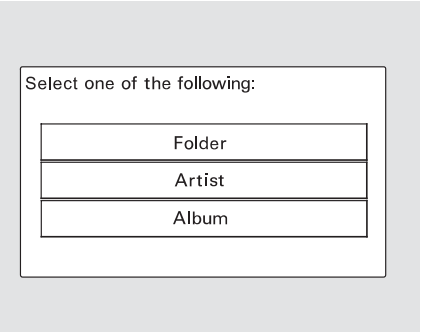

Select the desired mode by touching the appropriate icon, or move the joystick, then press ENT.

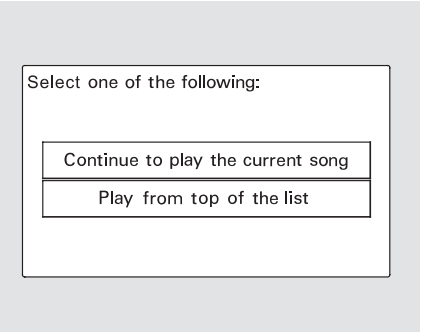

After you select the play mode, the display changes to the selectable playing menu. If you select “Continue playing the current song,” the system goes into the selected play mode after playing the current file.

Playing a PC card (EX-L model with navigation system)

If you select “Play a new track list,” the system goes into the selected play mode immediately and begins to play the new track list.

To go back to the previous screen, press the CANCEL button on the right side of the screen. To exit the play mode screens, press the AUDIO button.

To Change or Select Tracks/Files

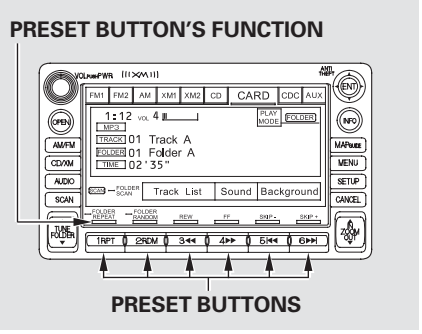

You can use the preset buttons while a card is playing to select or change files. Each preset button’s function is shown on the bottom of the screen.

Icons on the screen can also be selected with the joystick. Move the joystick left or right and up or down until the icon is highlighted, then press ENT on the top of the joystick to select the icon.

CONTINUED

Playing a PC card (EX-L model with navigation system)

SKIP — Each time you press and release ►►I (preset 6 button), the player skips forward to the beginning of the next file. Press and release I◄◄ (preset 5 button), to skip backward to the beginning of the current file. Press it again to skip to the beginning of the previous file.

FF/REW — To move rapidly within a file, press and hold ►► (preset 4 button) or ◄◄ (preset 3 button).

FOLDER SELECTION — To select a different folder, press either side of the TUNE bar to move to the beginning of the next folder. Press the ▲ side of the TUNE bar to skip the next folder, and press the ▼ side to move to the beginning of the current folder. Press it again to skip to the beginning of the previous folder.

TRACK REPEAT (FILE REPEAT) — To continuously replay a file, press and release the RPT button (preset 1). You will see TRACK REPEAT in the display. Press the RPT button again to turn it off.

FOLDER/ARTIST/ALBUM REPEAT — This feature, when activated, replays all the files on the selected folder/artist/album in the order they are recorded or listed. To activate each repeat mode, press and hold the RPT button (preset 1 button) for 2 seconds. You will see FOLDER REPEAT, ARTIST REPEAT or ALBUM REPEAT in the display. The system continuously replays the current folder/artist/album. Press and hold the RPT button again to turn it off. Pressing the RDM button, or selecting a different folder/artist/album with the TUNE bar also turns off the repeat feature.

TRACK RANDOM (Random within a folder) — This feature plays the files within a folder in random order. To activate random play, press and release the RDM button (preset 2 button). You will see TRACK RANDOM in the display. Press the RDM button again to return to normal play.

FOLDER/ARTIST/ALBUM RANDOM — This feature, when activated, plays all files in each folder/artist/album in random order, rather than in the order they are recorded or listed. To activate each random play, push and hold the RDM button (preset 2) for 2 seconds. You will see FOLDER RANDOM, ARTIST RANDOM or ALBUM RANDOM in the display.

The system then selects and plays files randomly. This continues until you deactivate each random play by pressing the RDM button again.

SCAN — The SCAN function samples all the files on the PC card in the order they are recorded. To activate the scan feature, press and release the SCAN button. You will see TRACK SCAN in the display. You will get a 10 second sampling of each file on the PC card. Press the SCAN button again to get out of scan mode and play the last file sampled.

Pressing either of the SKIP buttons (preset 5 button or 6 button) also turns off the scan feature.

FOLDER/ARTIST/ALBUM SCAN — This feature, when activated, samples the first file in each folder/artist/album on the PC card in order. To activate each scan feature, press and hold the SCAN button. You will see FOLDER SCAN, ARTIST SCAN or ALBUM SCAN in the display.

The system plays the first file in the folder for about 10 seconds. If you do nothing, the system plays the first file in each folder, in order, for 10 seconds each. After playing the first file of the last folder/artist/album, the system returns to normal play.

Pressing either of the SKIP buttons (preset 5 button or 6 button), selecting a different folder/artist/album with the TUNE bar, or pressing the SCAN button, also turns off the scan feature.

Using a Track List

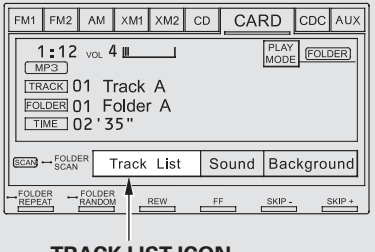

TRACK LIST ICON

You can also select a file directly from the folder and track lists on the audio display. Press the AUDIO button to show the audio display, then touch the Track List icon. The folder list menu appears on the display.

CONTINUED

Playing a PC card (EX-L model with navigation system)

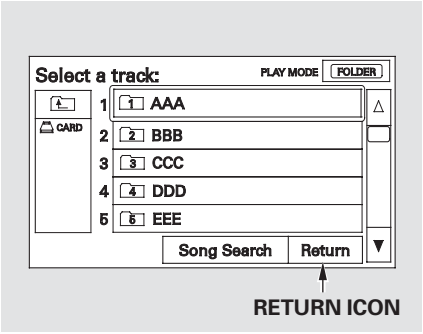

To scroll through the display, touch the ▲ or ▼ icon on the side of the screen. To go back to the previous display, touch the Return icon.

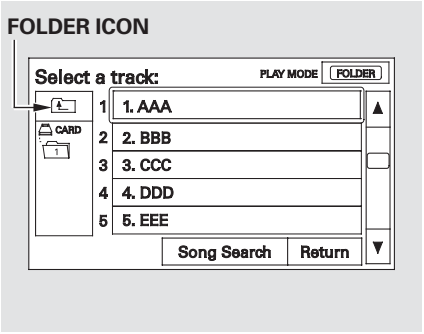

To select a folder, touch its icon on the screen. The display changes to the file list. Then, select and touch a desired file. In folder mode, touch the folder icon on the upper left of the screen to move to the parent folder.

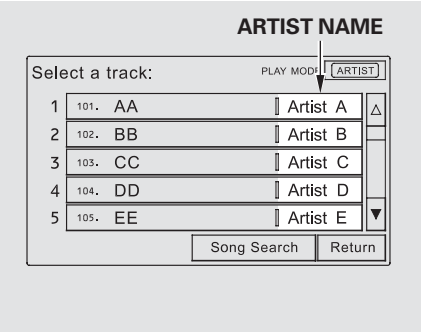

In artist mode, the artist name is also displayed on the right side of each selectable icon. Select the desired file.

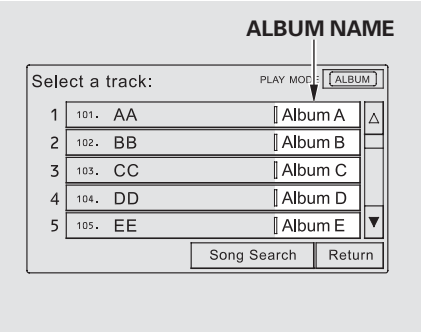

In album mode, the album name is also displayed on the right side of each selectable icon. Select the desired file.

To select a desired icon with the joystick, move it in the appropriate direction, then press ENT.

Press the AUDIO button to go back to the normal audio playing display. Pressing the CANCEL button goes back to the previous screen, and pressing the MAP button cancels the audio control display on the screen.

Song Search Function

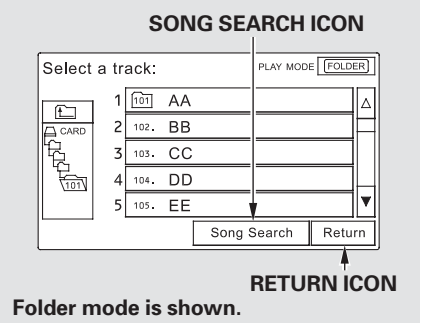

Folder mode is shown.

When you select “Song Search” from the track list display, the song search menu appears.

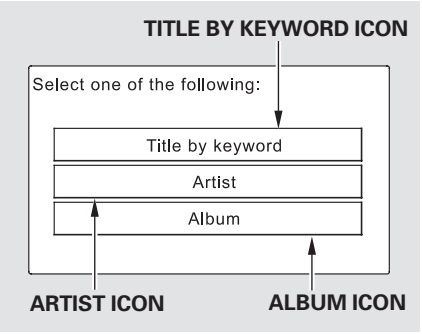

You can then select any of three modes to search a file: Title by Keyword, Artist, and Album.

CONTINUED

Playing a PC card (EX-L model with navigation system)

Searching for a Song Title by Keyword

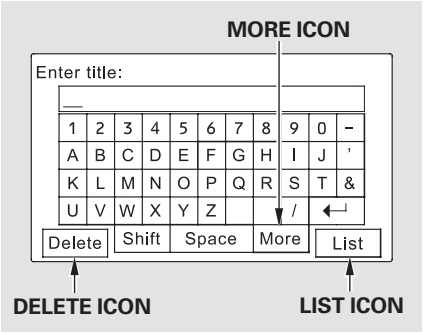

In Title by Keyword mode, enter the title name, or any keyword, by touching the letter icons on the screen. Press the List icon to begin the song search. If you press the CANCEL button on the control panel, the display returns to the mode menu without doing a search.

To cancel the selected letter, touch the Delete icon. To select more characters, touch the More icon. The other character list will be shown.

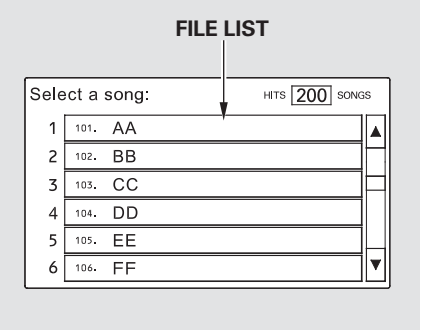

After the system searches for a song, a file list is displayed. To scroll through the list, touch the ▲ or ▼ icon on the side of the screen. Select the desired file by touching the appropriate icon, or moving the joystick and pressing ENT.

Searching for a Song by Artist Name

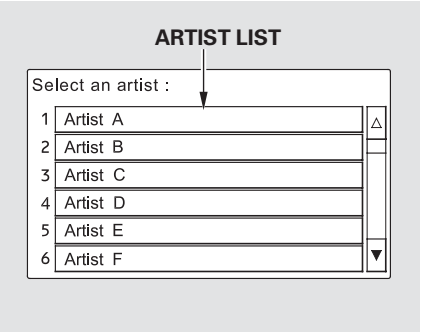

Select the Artist icon, and the artist list appears. Select the desired artist, and the artist's file list is displayed.

Playing a PC card (EX-L model with navigation system)

Searching for a Song by Album Name

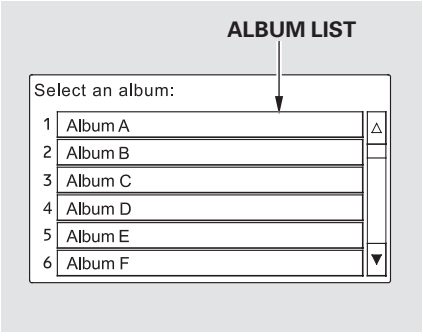

Select the Album icon, and the album list appears. Select the desired album, and its song list is displayed. You can then select the desired song from the list.

To Stop Playing a PC Card
To play the radio when a PC card is playing, press the AM/FM button or touch the FM1, FM2, AM, XM1, or XM2 icon. If a disc is in the audio unit, press the CD/XM button or touch the CD icon to play the disc. If a CD or CDs are in the CD changer, touch the CDC icon to play the disc(s). Touch the CARD icon to switch back to the PC card player.

You can also press the MODE button on the steering wheel to change modes.

If you turn the system off while a PC card is playing, either with the power/volume knob or by turning off the ignition switch, the card will stay in the drive. When you turn the system back on, the card will begin playing where it left off.

When you leave the vehicle, always remove the PC card from the audio unit.

Removing a PC Card
To remove a PC card from the audio unit, fold back the screen by pressing the OPEN button (see page 222). Press the eject button (⏏) to remove the card. If you do not remove it from the slot, you cannot return the screen to the upright position.

To return the screen to the upright position, press the CLOSE button.

You can also eject a card when the ignition switch is off.

PC Card Player Malfunction
If there is a problem with the PC card player, see your dealer.

PC card Error Messages (EX-L model with navigation system)

If you see an error message in the display while playing a PC card, find the solution in the chart to the right. If you cannot clear the error message, take your vehicle to your dealer.

Error Message	Solution
FILE ERROR	The system cannot read the file(s). Check the files on the disc. There is a possibility that the files have been damaged.
NO MUSIC	It appears when the PC card is empty or there are no MP3 or WMA files in the PC card. Save the MP3 or WMA files in the PC card.
MEDIA ERROR	It appears when an unsupported PC card is inserted. The system supports CF card, Flash ATA card, and SanDisk 6-in-1 Card Adapter.

Playing an iPod® (EX-L model with navigation system)

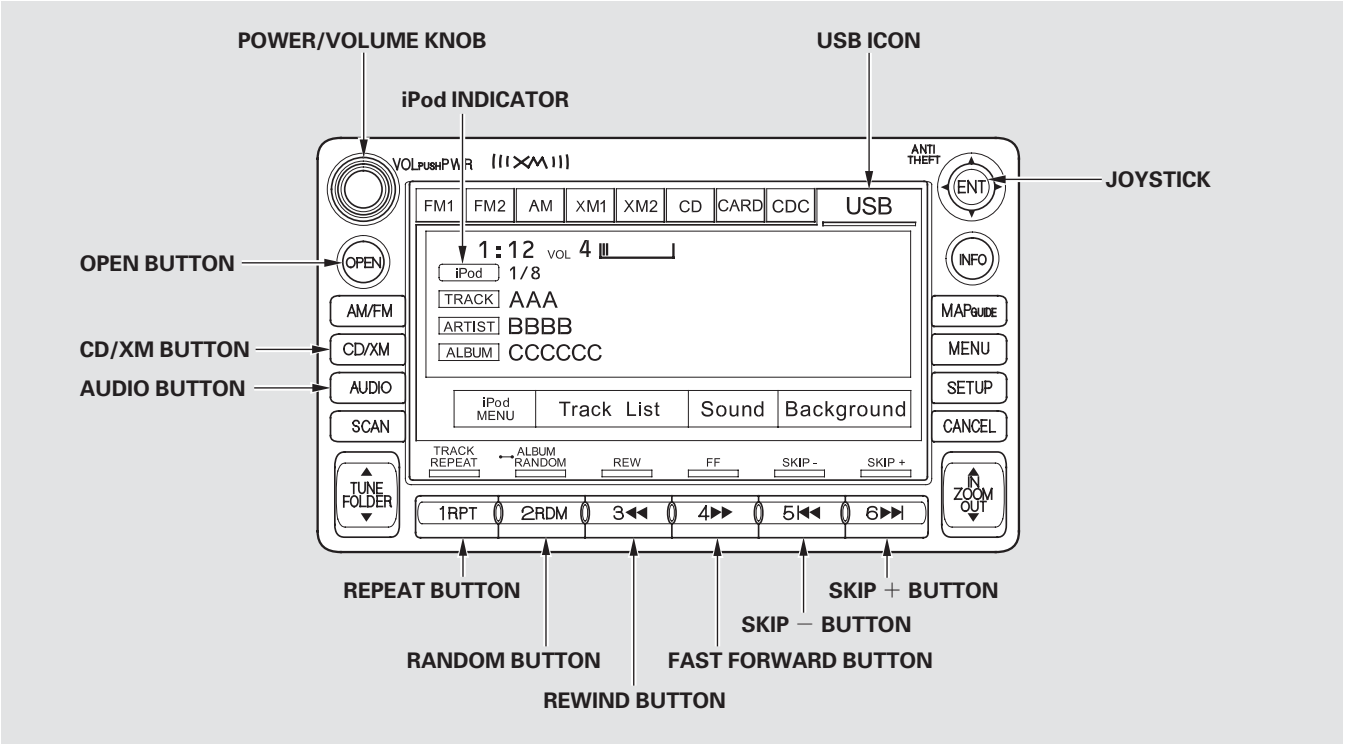

Playing an iPod® (EX-L model with navigation system)

To Play an iPod®
This audio system can select and play the audio files on the iPod® with the same controls used for the in-dash disc player. To play an iPod, connect it to the USB adapter cable in the upper glove box by using your dock connector. Press the AUDIO button beside the screen to show the audio display and touch the USB icon. The ignition switch must be in the ACCESSORY (I) or ON (II) position. The iPod will also be recharged with the ignition switch in these positions.

The audio system reads and plays playable sound files on the iPod. The system cannot operate an iPod as a mass storage device. The system will only play songs stored on the iPod with iTunes.

iPod and iTunes are registered trademarks owned by Apple Inc.

iPods compatible with your audio system using the USB adapter cable are:

Model	Software
iPod classic (80/160 G)	Ver. 1.1.2 or more
iPod classic (120 G)	Ver. 2.0.1 or more
iPod with video (iPod 5th generation)	Ver. 1.3.0 or more
iPod nano	Ver. 1.3.1 or more
iPod nano 2nd generation	Ver. 1.1.3 or more
iPod nano 3rd generation	Ver. 1.1.3 or more
iPod nano 4th generation	Ver. 1.0.3 or more
iPod nano 5th generation	Ver. 1.0.1 or more
iPod touch	Ver. 1.1.5 or more
iPod touch 2nd generation	Ver. 2.2.1 or more

Use only compatible iPods with the latest software. iPods that are not compatible will not work in this audio unit.

NOTE:
- Do not connect your iPod using a hub.
- Do not keep the iPod in the vehicle. Direct sunlight and high heat will damage it.
- Do not use an extension cable between the USB adapter cable equipped with your vehicle and your dock connector.
- We recommend backing up your data before playing it.
- Some devices cannot be powered or charged via the USB adapter. If this is the case, use the accessory adapter to supply power to your device.

Playing an iPod® (EX-L model with navigation system)

Connecting an iPod

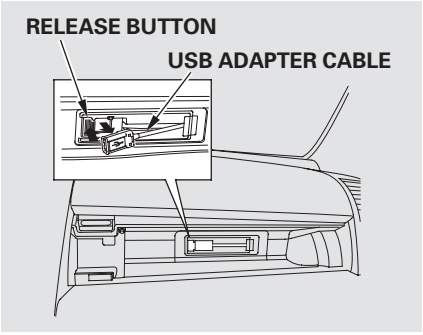

1. Open the upper glove box.
2. Push the release button to release the USB adapter cable.
3. Connect your dock connector to the iPod correctly and securely.

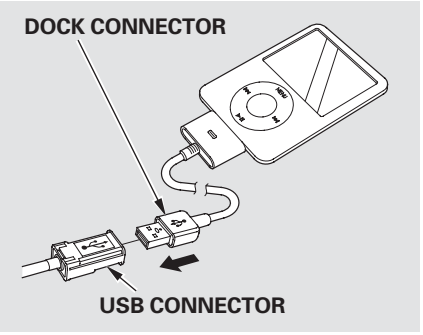

4. Install the dock connector to the USB adapter cable securely.

If the audio system still does not recognize the iPod, the iPod may need to be reset. Follow the instructions that came with your iPod, or you can find reset instructions online at *www.apple.com/itunes/*

The current file number and total of the selected playable files are displayed on the screen. It also shows the artist, album and track (file) names on the screen.

Voice Control System
You can select the AUX mode by using the navigation system voice control buttons, but cannot operate the play mode functions.

CONTINUED

Playing an iPod® (EX-L model with navigation system)

To Change or Select Files

Use the SKIP button while an iPod is playing to change files.

SKIP — Each time you press and release ►►I (preset 6 button), the player skips forward to the beginning of the next file. Press and release I◄◄ (preset 5 button), to skip backward to the beginning of the current file. Press it again to skip to the beginning of the previous file.

FF/REW — To move rapidly within a file, press and hold ►► (preset 4 button) or ◄◄ (preset 3 button).

To Select a File from iPod Menu

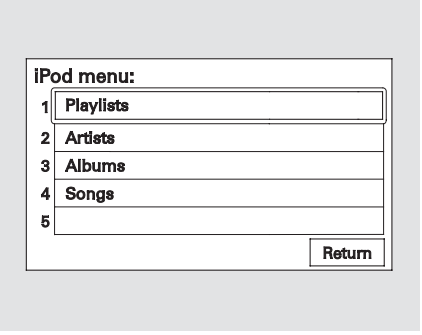

You can also select a file from any list on the iPod menu: playlists, artists, albums and songs. Press the AUDIO button to display the screen, then touch the iPod MENU icon.

Select the desired mode by touching the appropriate icon, or move the joystick, then press ENT.

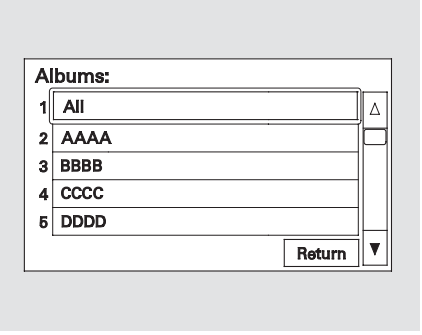

If you select “ALL” on either the artists or albums list, all available files on the selected list are played.

Press the AUDIO button to go back to the normal audio playing display. Pressing the CANCEL button goes back to the previous screen, and pressing the MAP button cancels the audio control display on the screen.

Using a Track List

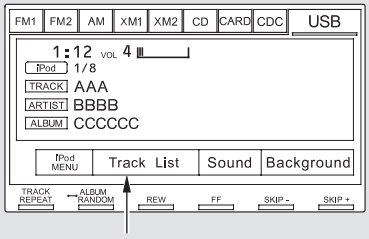

You can also select a file directly from a track list on the audio display. Press the AUDIO button to show the audio display, then touch the Track List icon. The track list menu appears on the display.

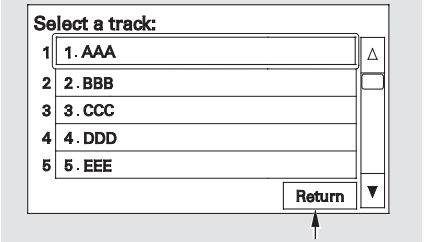

To scroll through the display, touch the ▲ or ▼ icon on the side of the screen. To go back to the previous display, touch the Return icon.

To play a file, touch its icon on the screen. The current folder is highlighted in blue.

To Select Repeat or Random Mode:
You can select any type of repeat and random mode by using the RPT button or RDM button.

REPEAT — This feature continuously plays a file. To activate the repeat feature, press the RPT button (Preset 1 button). You will see "REPEAT" in the display. To turn it off, press the RPT button (Preset 1 button) again.

TRACK RANDOM — This feature plays all available files from the selected items in the iPod menu list (playlists, artists, albums or songs) in random order. To activate the track random feature, press the RDM button (Preset 2 button). You will see "TRACK RANDOM" in the display. To turn it off, press the RDM button (Preset 2 button).

CONTINUED

Playing an iPod® (EX-L model with navigation system)

ALBUM RANDOM — This feature plays all available albums from the selected items in the iPod menu list (playlists, artists, albums or songs) in random order. The files in each album are played in the recorded order. To activate the album random feature, press and hold the RDM button (Preset 2 button). You will see "ALBUM RANDOM" in the display. To turn it off, press and hold the RDM button (Preset 2 button).

You can also select another list from the iPod menu while keeping the random function.

NOTE:
Available operating functions vary on models or versions. Some functions may not be available on the vehicle's audio system.

To Stop Playing Your iPod
To play the radio, press the AM/FM button or touch the FM1, FM2, AM, XM1, or XM2 icon. Touch the CD icon to switch to the disc mode (if a disc is loaded). Each time you press the CD/XM button, the audio mode switches between iPod, disc and XM Radio.

If a PC card is in the audio unit, touch the CARD icon to play the PC card.

Touch the USB icon to switch back to the iPod.

You can also press the MODE button on the steering wheel to change modes.

Disconnecting an iPod
You can disconnect the iPod at any time when you see the "OK to disconnect" message* in the iPod display. Always make sure you see "OK to disconnect" message in the iPod display before you disconnect it. Make sure to follow the iPod's instructions on how to disconnect the dock connector from the USB adapter cable.

* : The displayed message may vary on models or versions. On some models, there is no message to disconnect.

When you disconnect the iPod while it is playing, the navigation screen shows "NO DATA."

If you reconnect the same iPod, the system may begin playing where it left off, depending on what mode the iPod is in when it is reconnected.

iPod® Error Messages
If you see an error message in the screen, see page 241.

iPod® Error Messages (EX-L model with navigation system)

If you see an error message on the screen while playing an iPod, find the solution in the chart to the right. If you cannot clear the error message, take your vehicle to your dealer.

Error Message	Cause	Solution
USB ERROR	USB ROM Error	There is a problem with the USB adapter unit.
BAD USB DEVICE PLEASE CHECK OWNERS MANUAL	Appears when an incompatible device is connected.	Disconnect the device. Then, turn the audio system off, and turn it on again. Do not reconnect the device that caused the error.
iPod NO SONG	No files in iPod	Appears when the iPod is empty. Store some files in the iPod.
UNSUPPORTED VER.	Use of unsupported iPod	Appears when an unsupported iPod is connected. See page 236 for specification information on iPods. If it appears when a supported iPod is connected, update the iPod software to the newer version.
CONNECT RETRY	Recognition failure of iPod	Appears when the system does not acknowledge the iPod. Reconnect the iPod.

Playing a USB Flash Memory Device (EX-L model with navigation system)

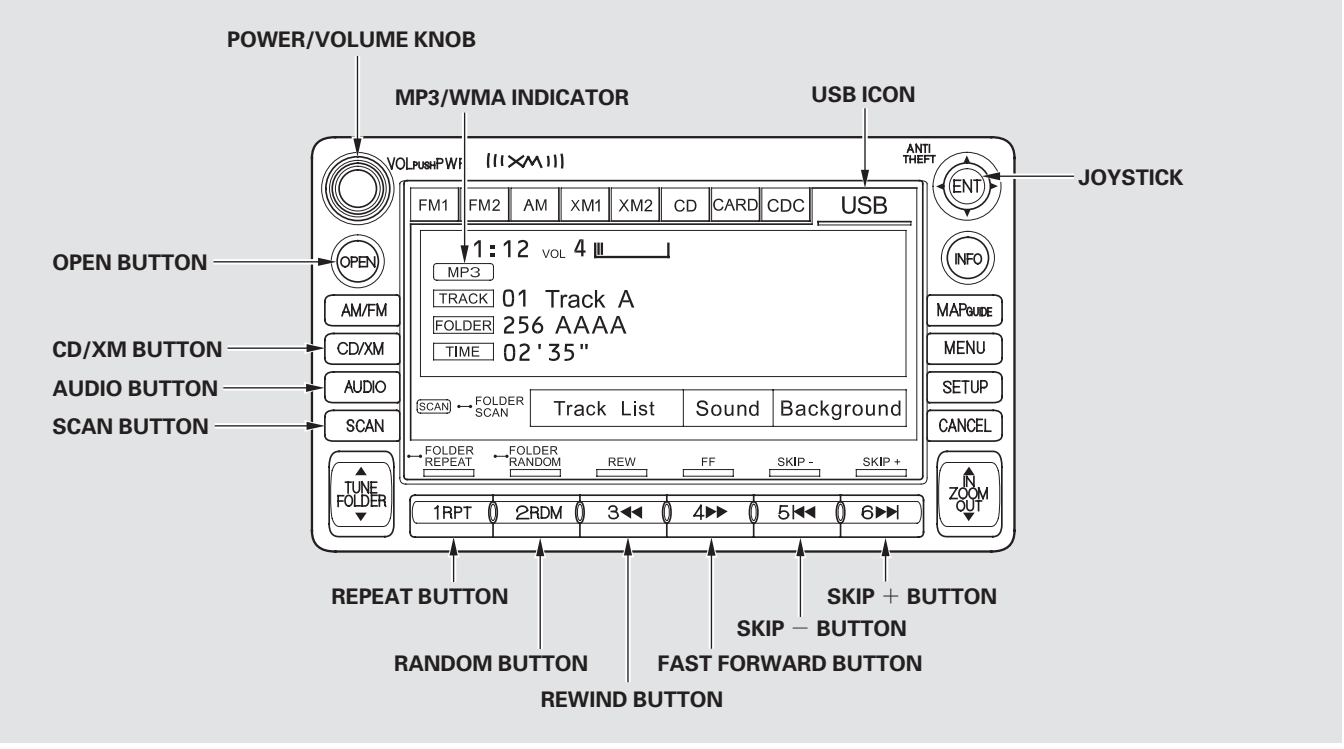

Playing a USB Flash Memory Device (EX-L model with navigation system)

To Play a USB Flash Memory Device

This audio system can select and play the audio files from a USB flash memory device with the same controls used for the in-dash disc player. To play a USB flash memory device, connect it to the USB adapter cable in the upper glove box. The ignition switch must be in the ACCESSORY (I) or ON (II) position. Press the AUDIO button beside the screen to show the audio display and touch the USB icon.

The audio system reads and plays the audio files on the USB flash memory device in MP3, WMA or AAC* formats. Depending on the format, the display shows MP3, WMA or AAC when a USB flash memory device is playing. The USB flash memory device limit is up to 700 folders or up to 65535 files.

* : Only AAC format files recorded with iTunes are playable on this audio unit.

The recommended USB flash memory devices are 256 MB or higher, and formatted with the FAT file system. Some digital audio players may be compatible as well.

Some USB flash memory devices (such as devices with security lock-out features, etc.) will not work in this audio unit.

NOTE:

- Do not use a device such as a card reader or hard drive as the device or your files may be damaged.
- Do not connect your USB flash memory device using a hub.
- Do not use an extension cable to the USB adapter cable equipped with your vehicle.
- Do not keep a USB flash memory device in the vehicle. Direct sunlight and high heat will damage it.
- We recommend backing up your data before playing a USB flash memory device.
- Depending on the type and number of files, it may take some time before they begin to play.

CONTINUED

Playing a USB Flash Memory Device (EX-L model with navigation system)

- Depending on the software the files were made with, it may not be possible to play some files, or display some text data.
- Some devices cannot be powered or charged via the USB adapter. If this is the case, use the accessory adapter to supply power to your device.
- Depending on the type of encoding and writing software used, there may be cases where character information does not display properly.
- The order of files in USB playback may be different from the order of files displayed in PC or other devices etc. Files are played in the order stored in USB flash memory device.

Some versions of MP3, WMA, or AAC format may not be supported. If an unsupported file is found, the audio unit displays UNSUPPORTED, then skips to the next file.

In WMA or AAC format, DRM (digital rights management) files cannot be played. If the system finds a DRM file, the audio unit displays UNPLAYABLE FILE, and then skips to the next file.

NOTICE

Combining a low sampling frequency with a low bitrate may result in extremely degraded sound quality.

Voice Control System

You can select the AUX mode by using the navigation system voice control buttons, but cannot operate the play mode functions.

Playing a USB Flash Memory Device (EX-L model with navigation system)

Connecting a USB Flash Memory Device

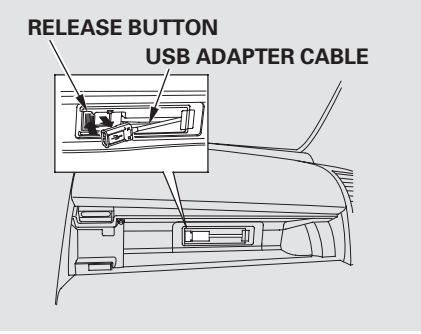

1. Open the upper glove box.

2. Push the release button to release the USB adapter cable.

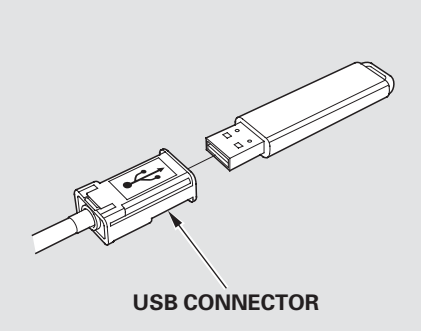

3. Connect the USB flash memory device to the USB connector correctly and securely.

When the USB flash memory device is connected and the USB mode is selected on the audio system, the WMA or MP3 indicator is shown on the navigation screen. It also shows the folder and file numbers, and the elapsed time on the screen.

To Change or Select Files

Use the SKIP button while a USB flash memory device is playing to change files.

SKIP — Each time you press and release ►►I (preset 6 button), the player skips forward to the beginning of the next file. Press and release I◄◄ (preset 5 button), to skip backward to the beginning of the current file. Press it again to skip to the beginning of the previous file.

FF/REW — To move rapidly within a file, press and hold ►► (preset 4 button) or ◄◄ (preset 3 button).

FOLDER SELECTION — To select a different folder, press either side of the TUNE bar. Press the ▲ side to skip to the next folder, and press the ▼ side to skip to the beginning of the previous folder.

CONTINUED

Playing a USB Flash Memory Device (EX-L model with navigation system)

Using a Track List

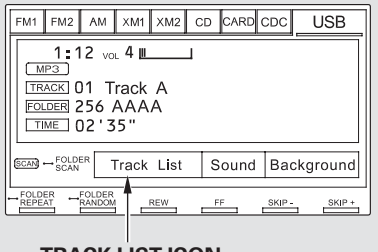

TRACK LIST ICON

You can also select a folder and file from the lists shown on the screen. Press the AUDIO button to show the audio display on the navigation screen.

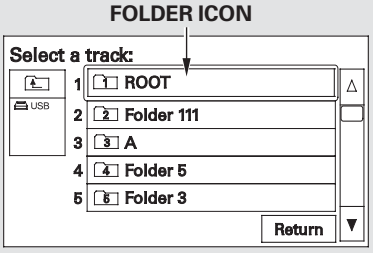

Touch the Track List icon to switch the display to the folder list, then select and touch a desired folder.

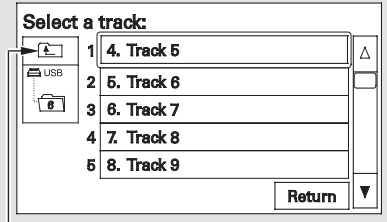

FOLDER ICON

The display changes to the file list. Then, select and touch a desired file.

Touch the folder icon on the upper left of the screen to move to the parent folder.

To scroll through the display, touch the ▲ or ▼ icon on the side of the screen. To go back to the previous display, touch the Return icon.

Playing a USB Flash Memory Device (EX-L model with navigation system)

To select a desired icon with the joystick, move it in the appropriate direction, then press ENT.

Press the AUDIO button to go back to the normal audio playing display. Pressing the CANCEL button goes back to the previous screen, and pressing the MAP button cancels the audio control display on the screen.

To Select Repeat, Random or Scan Mode:
You can select any type of repeat, random and scan modes by using the RPT button, RDM button, or SCAN button.

TRACK REPEAT — This feature continuously plays a file. To activate the track repeat feature, press the RPT button (Preset 1 button). You will see "TRACK REPEAT" in the display. To turn it off, press the RPT button (Preset 1 button).

FOLDER REPEAT — This feature replays all the files in the selected folder in the order they are stored. To activate the folder repeat feature, press and hold the RPT button (Preset 1 button). You will see "FOLDER REPEAT" in the display. To turn it off, press and hold the RPT button (Preset 1 button).

TRACK RANDOM — This feature plays all the files in random order. To activate the track random feature, press the RDM button (Preset 2 button). You will see "TRACK RANDOM" in the display. To turn it off, press the RDM button (Preset 2 button).

FOLDER RANDOM — This feature plays the files in the selected folder in random order. To activate the folder random feature, press and hold the RDM button (Preset 2 button). You will see "FOLDER RANDOM" in the display. To turn it off, press and hold the RDM button (Preset 2 button).

CONTINUED

Playing a USB Flash Memory Device (EX-L model with navigation system)

TRACK SCAN — This feature samples all files in the selected folder in the order they are stored. To activate the scan feature, press the SCAN button. You will see "TRACK SCAN" in the display. You will also see the file number blinking. You will get a 10 second sampling of each file in the folder. Press the SCAN button to get out of the scan mode. The system plays the last file sampled.

FOLDER SCAN — This feature samples the first file in each folder in the order they are stored. To activate the folder scan feature, press and hold the SCAN button. You will see "FOLDER SCAN" in the display. You will also see the folder number blinking. You will get a 10 second sampling of the first file in each folder. Press the SCAN button to get out of the scan mode. The system plays the last file sampled.

To Stop Playing a USB Flash Memory Device

To play the radio, press the AM/FM button or touch the FM1, FM2, AM, XM1, or XM2 icon. Touch the CD icon to switch to the disc mode (if a disc is loaded). Each time you press the CD/XM button, the audio mode switches between the USB, disc and XM Radio.

If a PC card is in the audio unit, touch the CARD icon to play the PC card.

Touch the USB icon to switch back to the USB flash memory device.

You can also press the MODE button on the steering wheel to change modes.

Disconnecting a USB Flash Memory Device

You can disconnect the USB flash memory device at any time even if the USB mode is selected on the audio system. Always follow the USB flash memory device's instructions when you remove it.

When you disconnect the USB flash memory device while it is playing, the navigation screen shows "NO DATA."

If you reconnect the same USB flash memory device, the system will begin playing where it left off.

USB Flash Memory Device Error Messages

If you see an error message in the screen, see page 249.

USB Flash Memory Device Error Messages (EX-L model with navigation system)

If you see an error message on the screen while playing a USB flash memory device, find the solution in the chart to the right. If you cannot clear the error message, take your vehicle to your dealer.

Error Message	Cause	Solution
USB ERROR	USB ROM Error	There is a problem with the USB adapter unit.
BAD USB DEVICE PLEASE CHECK OWNERS MANUAL	Appears when an incompatible device is connected.	Disconnect the device. Then, turn the audio system off, and turn it on again. Do not reconnect the device that caused the error.
UNPLAYABLE FILE	Use of unsupported files	Appears when the files in the USB flash memory device are DRM or an unsupported format. This error message appears for about 3 seconds, then plays the next song.
USB NO SONG	No files in USB flash memory device	Appears when the USB flash memory device is empty or there are no MP3, WMA, or AAC files in the USB flash memory device. Save some MP3, WMA, or AAC files in the USB flash memory device.
UNSUPPORTED	Use of unsupported USB flash memory device	Appears when an unsupported device is connected. See page 243 for the specification information for the USB flash memory device. If it appears when the supported device is connected, reconnect the device.

AM/FM Radio Reception

Radio Frequencies
The radio can receive the complete AM and FM bands.
Those bands cover these frequencies:

AM band: 530 to 1,710 kHz
FM band: 87.7 to 107.9 MHz

Radio stations on the AM band are assigned frequencies at least 10 kHz apart (530, 540, 550). Stations on the FM band are assigned frequencies at least 0.2 MHz apart (87.9, 88.1, 88.3).

Stations must use these exact frequencies. It is fairly common for stations to round-off the frequency in their advertising, so your radio could display a frequency of 100.9 even though the announcer may identify the station as “FM101.”

Radio Reception
How well the radio receives stations is dependent on many factors, such as the distance from the station’s transmitter, nearby large objects, and atmospheric conditions.

A radio station’s signal gets weaker as you get farther away from its transmitter. If you are listening to an AM station, you will notice the sound volume becoming weaker, and the station drifting in and out. If you are listening to an FM station, you will see the stereo indicator flickering off and on as the signal weakens. Eventually, the stereo indicator will go off and the sound will fade completely as you get out of range of the station’s signal.

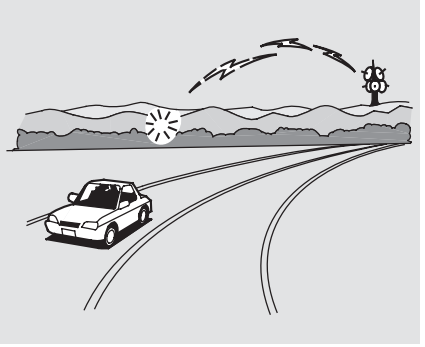

Driving very near the transmitter of a station that is broadcasting on a frequency close to the frequency of the station you are listening to can also affect your radio’s reception. You may temporarily hear both stations, or hear only the station you are close to.

AM/FM Radio Reception

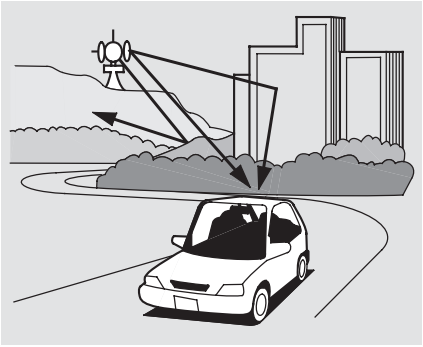

Radio signals, especially on the FM band, are deflected by large objects such as buildings and hills. Your radio then receives both the direct signal from the station's transmitter, and the deflected signal. This causes the sound to distort or flutter. This is a main cause of poor radio reception in city driving.

Radio reception can be affected by atmospheric conditions such as thunderstorms, high humidity, and even sunspots. You may be able to receive a distant radio station one day and not receive it the next day because of a change in conditions.

Electrical interference from passing vehicles and stationary sources can cause temporary reception problems.

As required by the FCC:
Changes or modifications not expressly approved by the party responsible for compliance could void the user's authority to operate the equipment.

Protecting Your Discs

General Information

- When using CD-R or CD-RW discs, use only high quality discs labeled for audio use.
- When recording a CD-R or CD-RW, the recording must be closed for it to be used by the system.
- Play only standard, round, 5-inch (12 cm) discs. Smaller or odd-shaped discs may jam in the drive or cause other problems.
- Handle your discs properly to prevent damage and skipping.

NOTICE

Do not use discs with adhesive labels. The label can curl up and cause the disc to jam in the unit.

Protecting Discs

When a disc is not being played, store it in its case to protect it from dust and other contamination. To prevent warpage, keep discs out of direct sunlight and extreme heat.

To clean a disc, use a clean soft cloth. Wipe across the disc from the center to the outside edge.

A new disc may be rough on the inner and outer edges. The small plastic pieces causing this roughness can flake off and fall on the recording surface of the disc, causing skipping or other problems. Remove these pieces by rubbing the inner and outer edges with the side of a pencil or pen.

Never try to insert foreign objects in the system or the magazine.

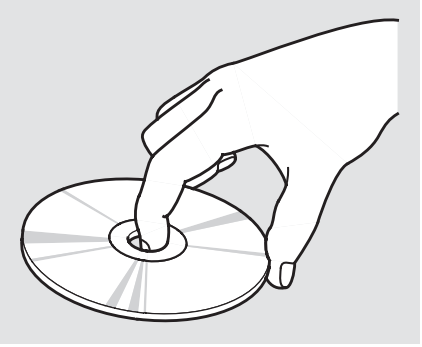

Handle a disc by its edges; never touch either surface. Do not place stabilizer rings or labels on the disc. These, along with contamination from fingerprints, liquids, and felt-tip pens, can cause the disc to not play properly, or possibly jam in the drive.

Additional Information on Recommended Discs
The disc player/changer has a sophisticated and delicate mechanism. If you insert a damaged disc as indicated in this section, it may become stuck inside and damage the audio unit.

Examples of these discs are shown to the right:

1. Bubbled, wrinkled, labeled, and excessively thick discs

Bubbled/ Wrinkled | With Label/ Sticker | Using Printer Label Kit | Sealed | With Plastic Ring

2. Damaged discs

Chipped/ Cracked | Warped

3. Poor quality discs

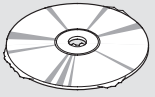

Burrs

CONTINUED

Protecting Your Discs

4. Small, irregular shaped discs

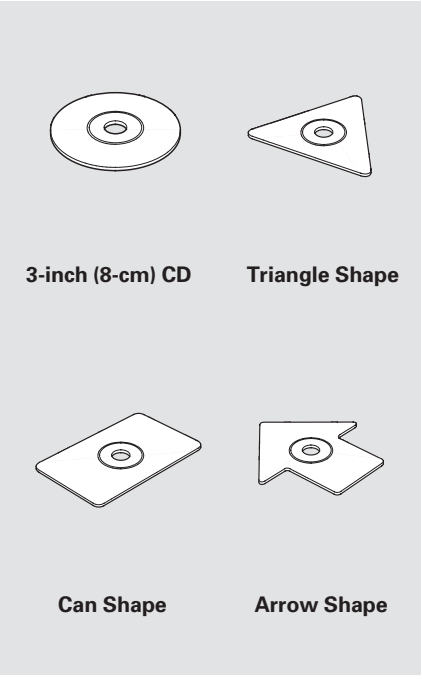

5. Discs with scratches, dirty discs

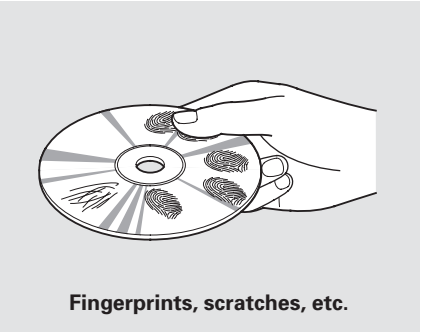

- CD-R or CD-RW may not play due to the recording conditions.
- Scratches and fingerprints on the discs may cause the sound to skip.

- Recommended discs are printed with the following logo.

- Audio unit may not play the following formats.

- This audio unit cannot play a Dual-disc®.

Remote Audio Controls

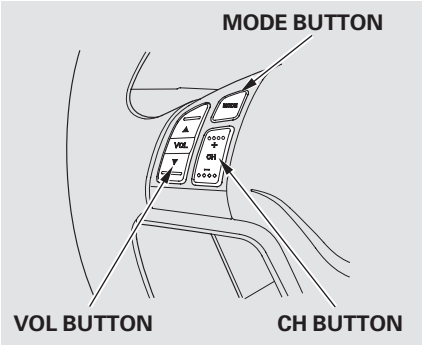

If equipped
Three controls for the audio system are mounted in the steering wheel hub. These let you control basic functions without removing your hand from the wheel.

The VOL button adjusts the volume up (▲) or down (▼). Press the top or bottom of the button and hold it until the desired volume is reached, then release it.

The MODE button changes the mode.

On models with navigation system
Pressing the MODE button repeatedly cycles through all possible media sources whether they are present or not.

On models without navigation system
Pressing the MODE button repeatedly cycles through all present, connected media sources. Media sources that are not present or connected will not appear when cycling with the MODE button.

If you are listening to the radio, use the CH button to change stations. Each time you press the top (+) of the button, the system goes to the next preset station on the band you are listening to. Press the bottom (−) to go back to the previous station. If you press and hold the CH button (+) or (−), the system goes into the seek mode. It finds a station with a strong signal.

CONTINUED

Remote Audio Controls

If you are playing a disc, iPod or USB flash memory device, the system skips to the beginning of the next track/file each time you press the top (+) of the CH button. Press the bottom (−) to return to the beginning of the current track/file. Press it twice to return to the previous track/file.

You can also use the seek function to select folders. Press and hold the top (+) of the CH button until you hear a beep, to skip forward to the first file in the next folder. Press the bottom (−) to skip backward to the previous folder.

On models with navigation system
If you are playing a PC card, press the top (+) of the CH button to advance to the next file. Press the bottom (−) to go back to the previous file.

If you are playing a USB flash memory device or iPod with the USB adapter cable, press and release the top (+) of the CH button to skip forward to the beginning of the next file. Press the bottom (−) to skip backward to the beginning to the current file. Press it twice to return to the previous file.

When playing a USB flash memory device, you can also use the seek function to skip the folder. To activate this, press and hold either side of the CH button until you hear a beep.

Playing an Optional Audio Unit

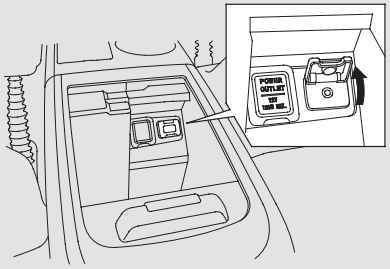

EX-L model is shown.

Your vehicle has the auxiliary input jack on the front panel, on the center table, or in the console compartment, depending on models. The system will accept auxiliary input from standard audio accessories using a 1/8 inch (3.5 mm) stereo miniplug.

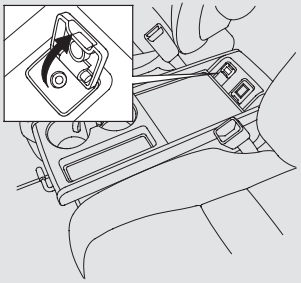

U.S. EX model is shown.

When a compatible audio unit is connected to the jack, press the AUX or CD/AUX button (AUX icon on models with navigation system) to select it.

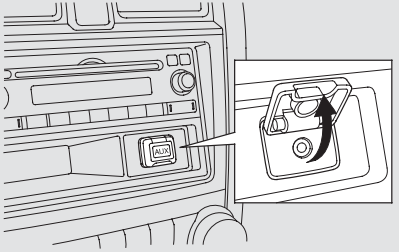

LX model

Radio Theft Protection

Your vehicle's audio system will disable itself if it is disconnected from electrical power for any reason. To make it work again, you must enter a specific code using the preset buttons (icons on vehicles with navigation system). Because there are hundreds of number combinations possible from specific digits, making the system work without knowing the exact code is nearly impossible.

You should have received a card that lists your audio system's code and serial numbers. It is best to store this card in a safe place at home. In addition, you should write the audio system's serial number in this owner's manual.

If you lose the card, you must obtain the code number from a dealer. To do this, you will need the system's serial number.

If your vehicle's battery is disconnected or goes dead, the audio system will disable itself. If this happens, you will see "ENTER CODE" in the frequency display the next time you turn on the system. Use the preset buttons to enter the code. On vehicles with navigation system, touch the icon to enter the code number, then touch the Done icon to set the code. The code is on the radio code card included in your owner's manual kit. When it is entered correctly, the radio will start playing.

If you make a mistake entering the code, do not start over; complete the sequence, then enter the correct code. You have 10 tries to enter the correct code. If you are unsuccessful in 10 attempts, you must then leave the system on for 1 hour before trying again.

The system will retain your AM and FM presets even if power is disconnected.

On models without navigation system
To set the time, press the CLOCK button until you hear a beep. The displayed time begins to blink.

Change the hours by pressing the H (hour) button until the numbers advance to the desired time. Change the minutes by pressing the M (minute) button until the numbers advance to the desired time.

Press the CLOCK button again to enter the set time.

You can quickly set the time to the nearest hour. If the displayed time is before the half hour, press and hold the CLOCK button, then press the R (reset) button to set the time back to the previous hour. If the displayed time is after the half hour, the same procedure sets the time forward to the beginning of the next hour.

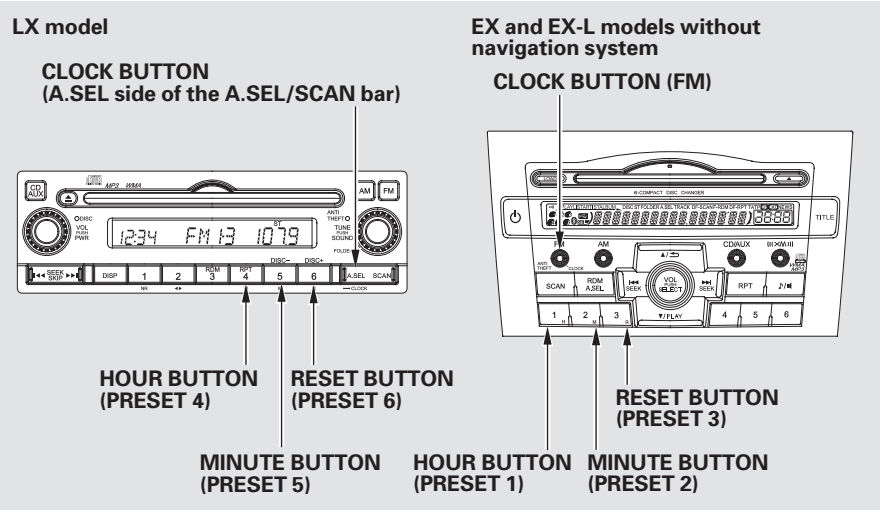

For example: 1:06 will reset to 1:00
1:52 will reset to 2:00

On models with navigation system
The navigation system receives signals from the global positioning system (GPS), and the displayed time is updated automatically by the GPS. Refer to the navigation system manual for how to adjust the time.

Compass

EX model and EX-L model without navigation system

Compass Operation

Next to the outside temperature indicator of the information display, a compass indicates which direction your vehicle is pointed. It indicates eight directions.

N: North
S: South
E: East
W: West
NE: Northeast
NW: Northwest
SE: Southeast
SW: Southwest

For example, when your vehicle is traveling in the north-east direction, the compass shows “NE” in the display.

Compass operation can be affected by driving near power lines or stations, across bridges, through tunnels, over railroad crossings, past large vehicles, or driving near large objects that can cause a magnetic disturbance. It can also be affected by accessories such as antennas and roof racks that are mounted by magnets.

Compass Calibration

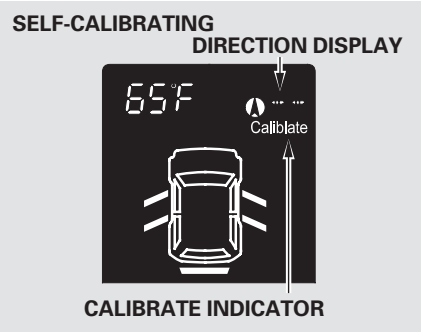

If you see "— —" in the direction display when you turn the ignition switch to the ON (II) position, the compass is self-calibrating.

The compass may need to be manually calibrated after exposure to a strong magnetic field. If the compass display changes to "— —" and the calibrate indicator blinks, or the display does not show any direction and the compass is not self-calibrating, do the following.

1. Drive the vehicle slowly in three complete circles.

NOTE: Do this procedure in an open area, away from buildings, power lines, and other vehicles.

2. When the display goes from "— —" or blank to an actual heading, the unit is calibrated and the display returns to normal.

Compass Zone Selection

In most areas, there is a variation between magnetic north and true north. Zone selection is required so the compass can compensate for this variation. To check and select the zone, do this:

1. Press and hold the select/reset knob for 10 seconds to change the display to the reset mode.

CONTINUED

Compass

ZONE INDICATOR

2. Select the zone indicator by turning the select/reset knob. The display begins to blink. Push the same knob to enter this setting.

3. Find the zone for your area on the zone map (see page 263). Each zone number (1 through 15) corresponds to a compass zone.

4. Turn the select/reset knob to select the appropriate zone number, and press the select/reset knob to enter the number.

When the system does not accept the selected compass zone, you see "— —" in the direction display. Select appropriate zone number again.

Zone Map

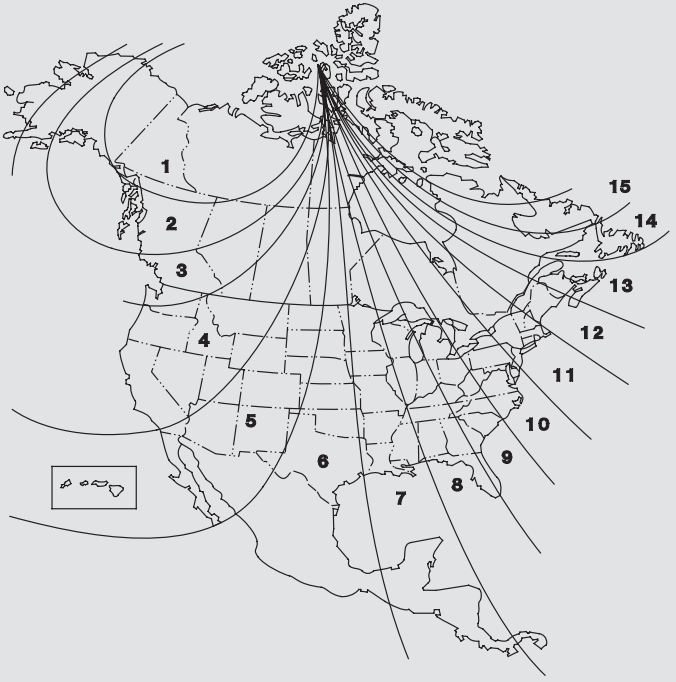

Security System

If equipped
The security system helps to protect your vehicle and valuables from theft. The horn sounds and a combination of headlights, parking lights, side marker lights and taillights flash if someone attempts to break into your vehicle or remove the audio unit. This alarm continues for 2 minutes, then the system resets. To reset an activated system before the 2 minutes have elapsed, unlock the driver's door with the key or use the remote transmitter.

The security system automatically sets 15 seconds after you lock the doors, hood, and the tailgate. For the system to activate, you must lock the doors and the tailgate from the outside with the key, driver's lock tab, door lock master switch, or remote transmitter. The security system indicator on the instrument panel starts blinking immediately to show you the system is setting itself.

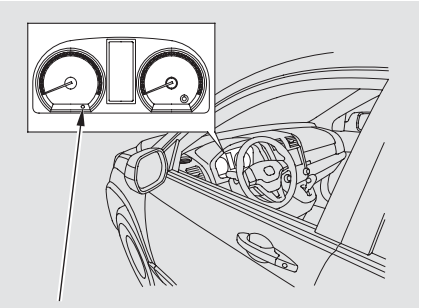

SECURITY SYSTEM INDICATOR

Once the security system is set, opening any door without using the key or the remote transmitter, the hood, or the tailgate will cause the system to alarm.

The security system will not set if the hood, tailgate, or any of the doors are not fully closed. If the system will not set, check the doors and the tailgate. You can also check the open indicator on the instrument panel (see page 65), to see if the doors and the tailgate are fully closed. Since it is not part of the monitor display, manually check the hood.

NOTE: Use the remote transmitter to quickly check that the hood, the tailgate, and all doors are closed. Push the lock button twice within 5 seconds. There should be an audible confirmation beep.

Do not attempt to alter this system or add other devices to it.

Rearview Camera and Monitor

On EX-L model with navigation system
Refer to the navigation system manual for operation of the rearview camera.

Cruise Control

Cruise control allows you to maintain a set speed above 25 mph (40 km/h) without keeping your foot on the accelerator pedal. It should be used for cruising on straight, open highways. It is not recommended for city driving, winding roads, slippery roads, heavy rain, or bad weather.

⚠ WARNING

Improper use of the cruise control can lead to a crash.

Use the cruise control only when traveling on open highways in good weather.

Using the Cruise Control

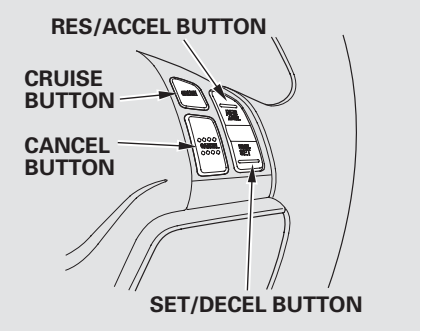

1. Push the CRUISE button on the steering wheel. The CRUISE MAIN indicator on the instrument panel comes on.

   The cruise control system can be left on, even when it is not in use.

2. Accelerate to the desired cruising speed above 25 mph (40 km/h).

3. Press and release the SET/DECEL button on the steering wheel. The CRUISE CONTROL indicator on the instrument panel comes on to show the system is now activated.

Cruise control may not hold the set speed when you are going up and down hills. If your vehicle speed increases going down a hill, use the brakes to slow down. This will cancel the cruise control. To resume the set speed, press the RES/ACCEL button. The CRUISE CONTROL indicator on the instrument panel will come back on.

Changing the Set Speed

You can increase the set cruising speed in any of these ways:

- Press and hold the RES/ACCEL button. When you reach the desired cruising speed, release the button.
- Push on the accelerator pedal. Accelerate to the desired cruising speed, then press the SET/DECEL button.
- To increase the speed in very small amounts, tap the RES/ACCEL button. Each time you do this, your vehicle will speed up about 1 mph (1.6 km/h).

You can decrease the set cruising speed in any of these ways:

NOTE: If you need to decrease your speed quickly, use the brakes as you normally would.

- Press and hold the SET/DECEL button. Release the button when you reach the desired speed.
- To slow down in very small amounts, tap the SET/DECEL button. Each time you do this, your vehicle will slow down about 1 mph (1.6 km/h).
- Tap the brake pedal lightly with your foot. The CRUISE CONTROL indicator on the instrument panel goes out. When the vehicle slows to the desired speed, press the SET/DECEL button.

CONTINUED

Cruise Control

Even with the cruise control turned on, you can still use the accelerator pedal to speed up for passing. After completing the pass, take your foot off the accelerator pedal. The vehicle will return to the set cruising speed.

Resting your foot on the brake pedal causes cruise control to cancel.

Canceling Cruise Control
You can cancel cruise control in any of these ways:

- Tap the brake pedal.
- Push the CANCEL button on the steering wheel.
- Push the CRUISE button on the steering wheel.

Resuming the Set Speed
When you push the CANCEL button, or tap the brake pedal, the system remembers the previously set speed. To return to that speed, accelerate to above 25 mph (40 km/h), and then press and release the RES/ACCEL button. The CRUISE CONTROL indicator comes on. The vehicle accelerates to the same speed as before.

Pressing the CRUISE button turns the system off and erases the previous cruising speed.

On models with navigation system

Bluetooth® HandsFreeLink® (HFL) allows you to place and receive phone calls using voice commands, without handling your cell phone.

To use HFL, you need a Bluetooth-compatible cell phone. For a list of compatible phones, pairing procedures, and special feature capabilities:

In the U.S., visit *handsfreelink.honda.com* or call (888) 528-7876.

In Canada, visit *www.handsfreelink.ca,* or call (888) 528-7876.

Using HFL

HFL Buttons

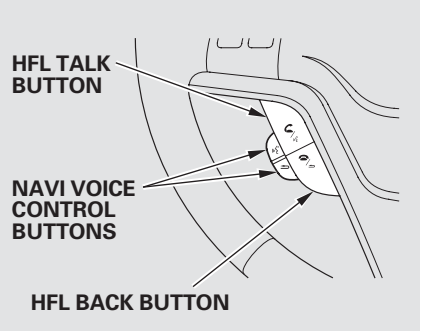

HFL Talk button — Press and release to give a command or answer a call.

HFL Back button — Press and release to end a call, go back to the previous command, or cancel the command.

CONTINUED

Voice Control Tips

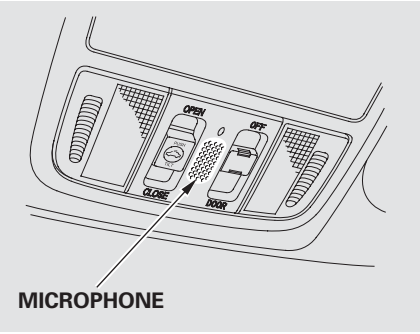

- Air or wind noise from the dashboard and side vents and all windows may interfere with the microphone. Adjust or close them as necessary.
- Press and release the HFL Talk button each time you want to make a command. After the beep, speak in a clear, natural tone.
- Try to reduce all background noise. If the microphone picks up voices other than yours, commands may be misinterpreted.
- Many commands can be spoken together. For example, you can say “Call 123-456-# # # #” or “Dial Peter.”
- When HFL is in use, navigation voice commands cannot be recognized.
- To change the volume level of HFL, use the audio system volume knob or the steering wheel volume controls.

Help Features

- To hear general HFL information, including help on using HFL buttons, Voice control, or making a call, say “Tutorial.”
- For help at any time, including a list of available commands, say “Hands free help.”

Information Display

As an incoming call notification, you will see the following display:

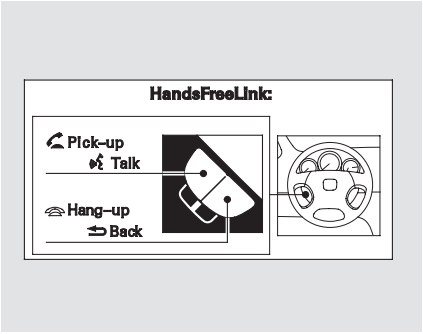

A notification that there is an incoming call, or HFL is in use, will appear on the navigation screen when the audio system is on.

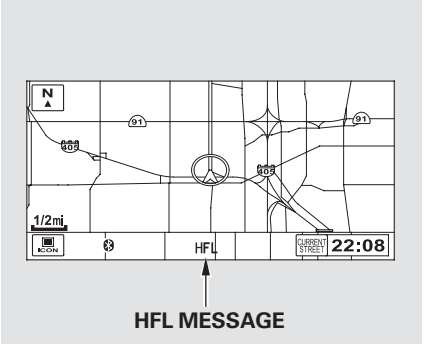

When there is an incoming call, or HFL is in use, “HFL” will appear at the bottom of the map screen.

However, when the current street is shown, and AUDIO INFO icon is visible, “HFL” will not appear when there is an incoming call.

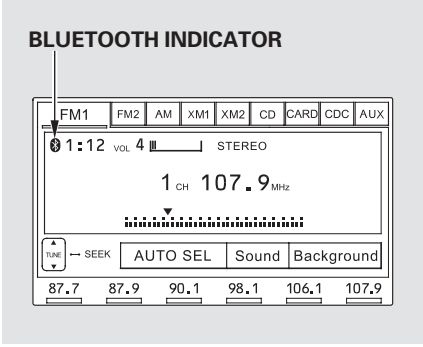

“ ” indicator will be displayed on the audio display when a phone is linked.

How to Use HFL

The ignition switch must be in the ACCESSORY (I) or ON (II) position.

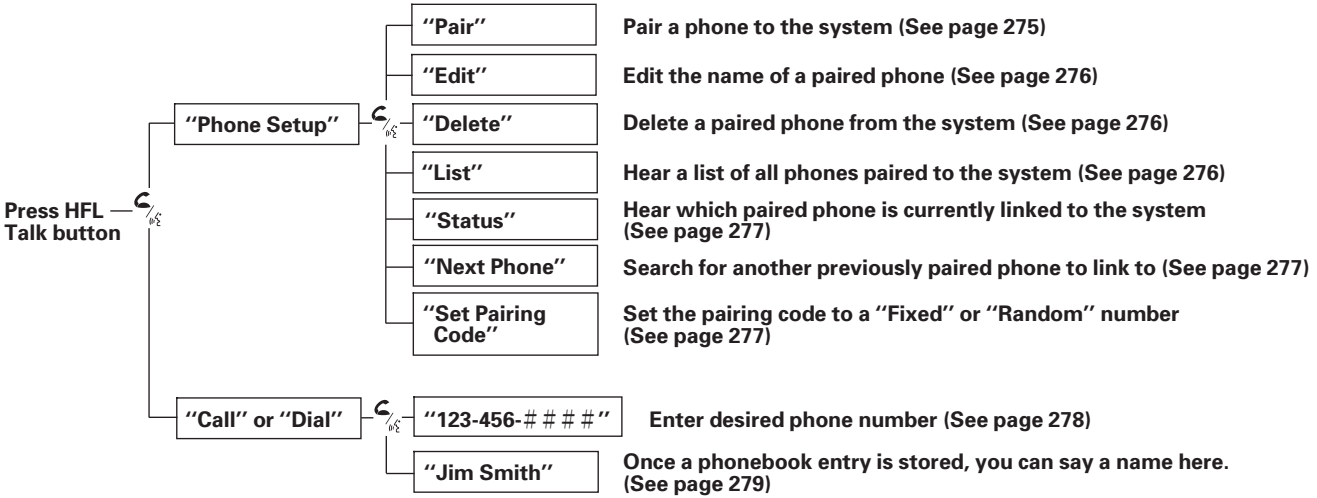

Press and release the HFL Talk button each time you give a command.

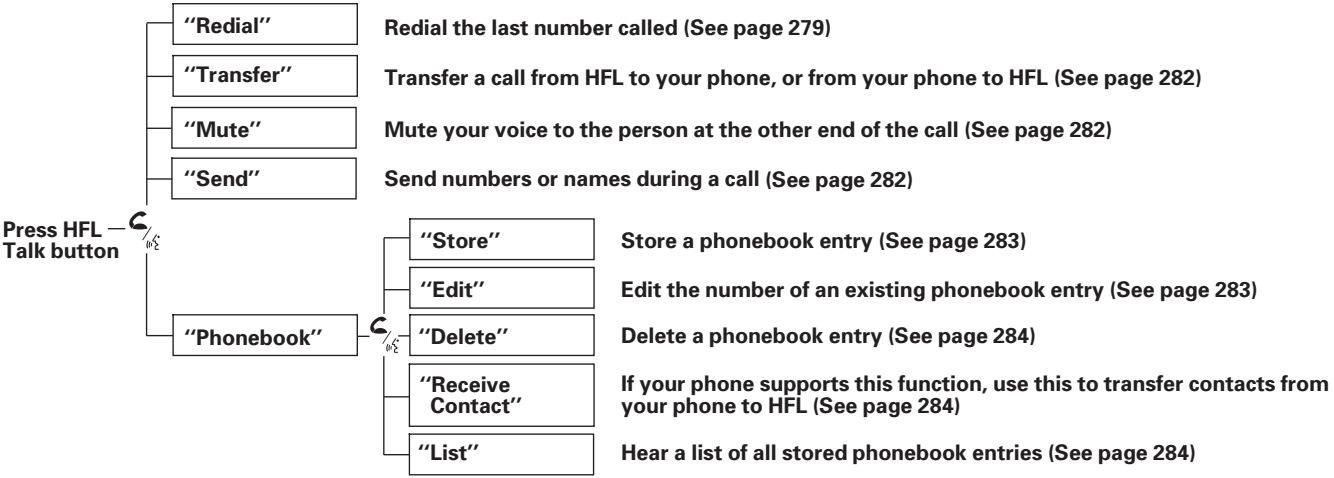

Press and release the HFL Talk button each time you give a command.

CONTINUED

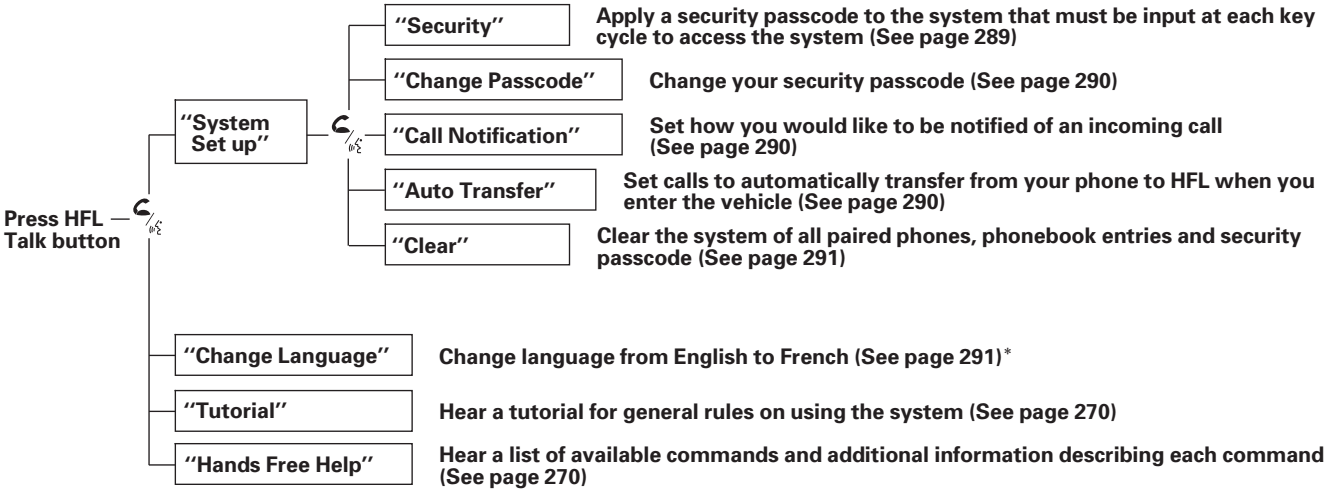

Press and release the HFL Talk button each time you give a command.

* : Canadian models

To use HFL, you need to pair your Bluetooth-compatible cell phone to the system.

Phone Setup
This command group is available for paired cell phones.

Phone pairing tips

- You cannot pair your phone while the vehicle is moving.
- Your phone must be in discovery or search mode to pair. Refer to your phone's manual.
- Up to six phones can be paired.
- Your phone's battery may drain faster when it is paired to HFL.
- If after three minutes your phone is not ready to pair or a phone is not found, the system will time out and return to idle.

To pair a cell phone:

1. Press and release the HFL Talk button. If you are pairing a phone for the first time, HFL will give you information about the pairing process. If it is not the first phone you are pairing, say "**Phone setup**" and say "**Pair**."
2. Follow the HFL prompts and put your phone in discovery or search mode. HFL will give you a 4-digit pairing code and begin searching for your phone.
3. When your phone finds a Bluetooth device, select HFL from the options and enter the 4-digit code from the previous step.
4. Follow the HFL prompts and name the newly paired phone.

CONTINUED

To rename a paired phone:
Press and release the HFL Talk button before a command.

1. Say "**Phone setup**."

2. Say "**Edit**" after the prompts.

3. If there is more than one phone paired to the system, HFL will ask you which phone's name you want to change. Follow the HFL prompts and rename the phone.

To delete a paired phone:
Press and release the HFL Talk button before a command.

1. Say "**Phone setup**."

2. Say "**Delete**" after the prompts.

3. HFL will ask you which phone you want to delete. Follow the HFL prompts to continue with the deletion.

To hear the names of all paired phones:
Press and release the HFL Talk button before a command.

1. Say "**Phone setup**."

2. Say "**List**" after the prompts.

3. HFL will read out all the paired phone's names.

To hear which paired phone is currently linked:
Press and release the HFL Talk button before a command.

1. Say "**Phone setup**."
2. Say "**Status**" after the prompts.
3. HFL will tell you which phone is linked to the system.

To change from the currently linked phone to another paired phone:
Press and release the HFL Talk button before a command.

1. Say "**Phone setup**."
2. Say "**Next phone**" after the prompts.
3. HFL disconnects the linked phone and searches for another paired phone.
4. Once another phone is found, it is linked to the system. HFL will inform you which phone is now linked.

If no other phones are found or paired, HFL will inform you that the original phone is linked again.

To change the pairing code setting:
Press and release the HFL Talk button before a command.

1. Say "**Phone setup**."
2. Say "**Set pairing code**" after the prompts.
3. If you want HFL to create a random code each time you pair a phone, say "**Random**." If you want to choose your own 4-digit code to be used each time, say "**Fixed**" and follow the HFL prompts.

Making a Call
You can make calls using any phone number or a name in the HFL phonebook. You can also redial the last number called.

Bluetooth is the wireless technology that links your phone to HFL. HFL uses a Class 2 Bluetooth, which means the maximum range between your phone and vehicle is 30 feet (10 meters).

During a call, HFL allows you to talk up to 30 minutes after you remove the key from the ignition switch. However, this may weaken the vehicle's battery.

To make a call using a phone number (talk button):
Press and release the HFL Talk button before a command.

1. Say "**Call**" or "**Dial**."

2. Follow the HFL prompts and say the phone number you want to dial.

3. Follow the HFL prompts to confirm the number and say "**Call**" or "**Dial**."

Once connected, you will hear the person you called through the audio speakers.

To make a call using a phone number (navigation display):

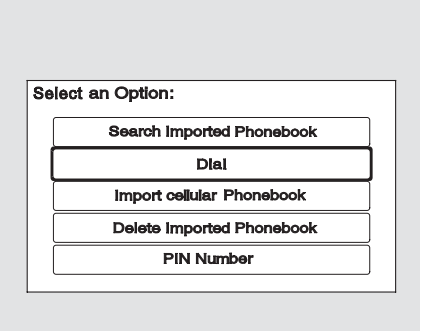

1. Press the INFO button, then select "**Cellular Phonebook**."

2. Select "**Dial**."

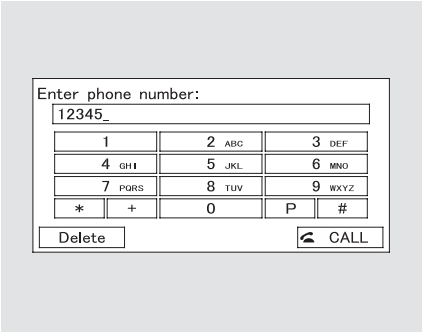

3. The navigation display will change as shown above. Enter a call number.

4. To make the call, select "**CALL**."

5. To end the call, select "**Hang-up**."

To make a call using a name in the HFL phonebook:
Press and release the HFL Talk button before a command.

1. Say "**Call**" or "**Dial**."

2. Follow the HFL prompts and say the name stored in the HFL phonebook that you want to call.

3. Follow the HFL prompts to confirm the name and make the call.

To redial the last number called by HFL:
Press and release the HFL Talk button and say "**Redial**."

To make a call from an imported phonebook:

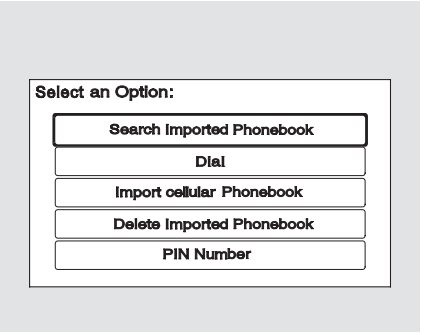

1. Press the INFO button, then select "**Cellular Phonebook**."

2. Select "**Search Imported Phonebook**."

CONTINUED

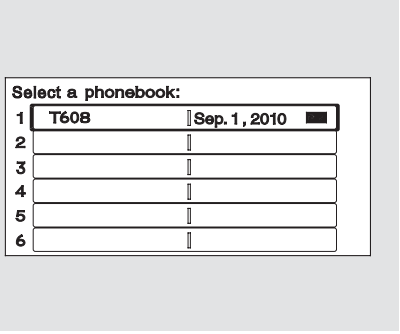

3. Select a phonebook you want to choose a phone number from.

If the phonebook you select is PIN-protected, you will need to enter the PIN to access it. See page 287 for more information.

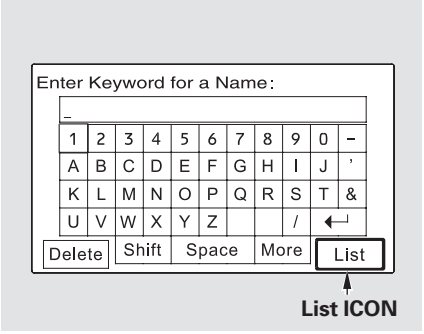

To search for a specific name in the phonebook, enter the keyword for either the first or last name.

To display all names in the phonebook, select the "**List**" option.

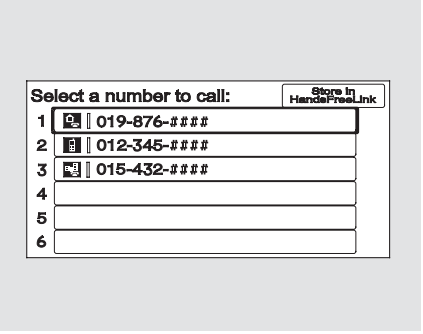

4. Select the name. All the phone numbers stored for that name will be listed.

5. Select the phone number, and HFL begins dialing.

If you choose "**Store in HandsFreeLink**," the phone number will be stored in HFL, so that you can call it using HFL's name tag by voice.

Receiving a Call

When you receive a call, an incoming call notification (if activated) will play and interrupt the audio system if it is on.

Press the HFL Talk button to answer the call, or the HFL Back button to hang up.

Call Waiting

If your phone has Call Waiting, press and release the HFL Talk button to put the original call on hold and answer the incoming call.

To return to the original call, press the HFL Talk button again. If you don't want to answer the incoming call, disregard it and continue with your original call. If you want to hang up the original call and answer the new call, press the HFL Back button.

Transferring a Call
You can transfer a call from HFL to your phone, or from your phone to HFL.

Press and release the HFL Talk button and say "**Transfer**."

Muting a Call
You can mute your voice to the person you are talking to during a call.

To mute your voice during a call, press and release the HFL Talk button and say "**Mute**."

To unmute your voice, press and release the HFL Talk button and say "**Mute**" again.

Send Numbers or Names During a Call
HFL allows you to send numbers or names during a call. This is useful when you call a menu-driven phone system.

To send a name or number during a call:
Press and release the HFL Talk button before a command.

1. Say "**Send**."
2. Follow the HFL prompts and say the name or number you want to send.
3. Follow the HFL prompts to send the tones and continue the call.

NOTE: To send a pound (#), say "pound." To send a star (*), say "star."

Phonebook
You can store up to 50 names with their associated numbers in HFL. The numbers you store can be not only phone numbers but other types, such as account numbers or passwords, which can be sent during a menu-driven call.

To store a phonebook entry:
Press and release the HFL Talk button before a command.

1. Say "**Phonebook**."
2. Say "**Store**" after the prompts.
3. Say a name you want to list as your phonebook entry.
4. Say the number you want to store for the name entry.
5. Follow the HFL prompts and say "**Enter**" to store the entry.

NOTE:
- Avoid using duplicate name entries.
- Avoid using "home" as a name entry.
- It is easier for HFL to recognize a multisyllabic or longer name. For example, use "Peter" instead of "Pete," or "John Smith" instead of "John."

To edit the number stored in a name:
Press and release the HFL Talk button before a command.

1. Say "**Phonebook**."
2. Say "**Edit**" after the prompts.
3. Follow the HFL prompts and say the name entry you want to edit.
4. When asked, say the new number for that name.
5. Follow the HFL prompts to complete the edit.

CONTINUED

To delete a name:
Press and release the HFL Talk button before a command.

1. Say "**Phonebook**."
2. Say "**Delete**" after the prompts.
3. Say the name you want to delete and follow the HFL prompts to complete the deletion.

To list all names in the phonebook:
Press and release the HFL Talk button before a command.

1. Say "**Phonebook**."
2. Say "**List**" after the prompts.
3. HFL begins reading the names in the order they were stored.
4. If you hear a name you want to call, immediately press the HFL Talk button and say "**Call**."

To store a specific phone number from your cell phone directly to the HFL phonebook (available on some phones):
Press and release the HFL Talk button before a command.

1. Say "**Phonebook**."
2. Say "**Receive contact**" after the prompts.
3. Follow the HFL prompts, select a number from your cell phone, and send it to HFL.
4. Follow the HFL prompts and name the number, or say "**Discard**" if it is not the number you want to store.
5. Follow the HFL prompts if you want to store another number.

Cellular Phonebook
(available on some phones)

If you select **Cellular Phonebook** from the Information screen menu, you will see five HFL options.

For a list of cell phones that are compatible with this feature:

In the U.S., visit *handsfreelink.honda.com* or call (888) 528-7876.

In Canada, visit *www.handsfreelink.ca,* or call (888) 528-7876.

Import Cellular Phonebook:
The entire phonebook data of the cell phone that is linked to HFL can be imported to the navigation system.

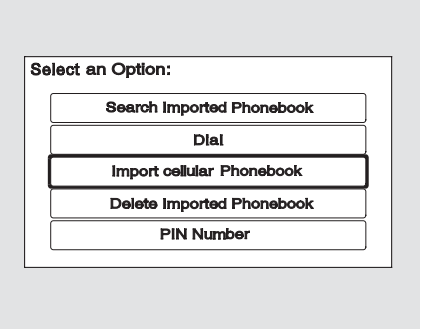

Select "**Import Cellular Phonebook**," and HFL will begin importing the phonebook. Select "**OK**" after the import is completed.

Search Imported Phonebook:
Once a phonebook has been imported, you can search the phone numbers by the person's name.

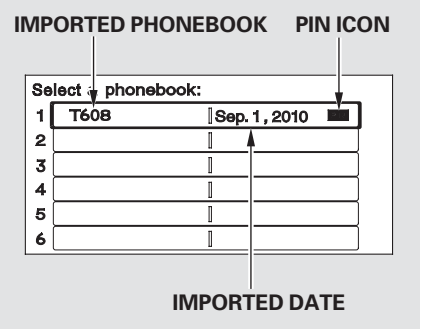

Select "**Search Imported Phonebook**," and a list of imported phonebooks will be displayed.

Select a phonebook from the list.

CONTINUED

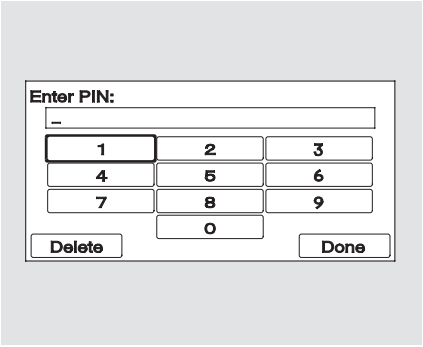

If the phonebook is PIN-protected, you will need to enter the 4-digit PIN.

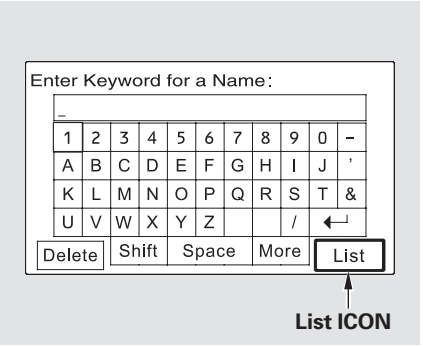

To search for a specific name in the phonebook, enter the keyword for either the first or last name.

To display all names in the phonebook, select the "**List**" option.

Select a person from the list. Up to three category icons are displayed in the left side of the list:

These indicate how many numbers are stored for the name. If a name has more than three category icons, "…" is displayed.

Select the person's number you want to call, and press the HFL Talk button.

Delete Imported Phonebook:
You can delete any imported phonebook.

Select "**Delete Imported Phonebook**," and a list of imported phonebooks will be displayed.

Select a phonebook you want to delete. If the phonebook is PIN-protected, you will need to enter the 4-digit PIN number.

After making a selection, the following screen will appear.

Select "**Yes**," then "**OK**" to complete the deletion.

PIN Number
You can add, change, or remove a PIN number from any phonebook.

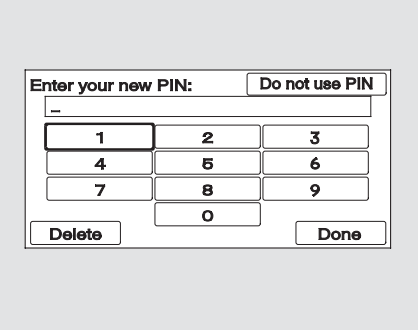

To add a PIN:
If you have selected a phonebook without a PIN, you will see the above display.

Enter the new 4-digit PIN. You will have to re-enter the PIN for confirmation.

CONTINUED

To change the PIN to a new number:

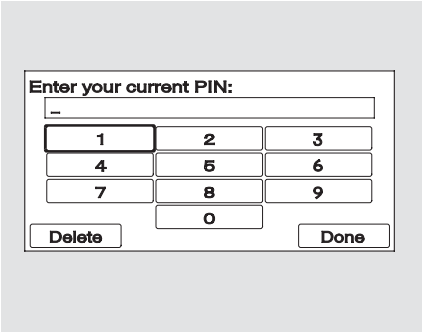

Select the phonebook you want. The display will change as shown above.

Enter the current PIN for this phonebook.

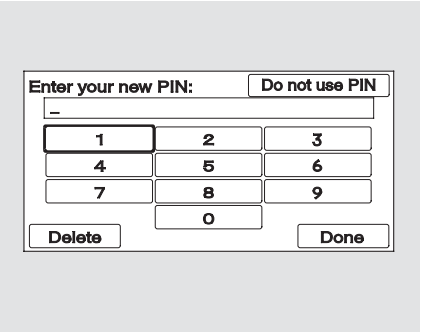

The display will change as shown above.

Enter the new 4-digit PIN number. You will be asked to re-enter the PIN for verification.

To remove a PIN:
Select "**PIN number**," then select "**Do not use PIN**" after you enter the current PIN.

System Setup
This command group allows you to change or customize HFL basic settings.

To set a 4-digit passcode to lock the HFL system for security purposes:
Press and release the HFL Talk button before a command.

1. Say "**System setup**."
2. Say "**Security**" after the prompts.
3. Follow the HFL prompts and say the 4-digit passcode you want to set.
4. Follow the HFL prompts to confirm the number.

NOTE: Once a passcode is set, you will need to enter it to use HFL each time you start the vehicle. If you forget the code, your dealer will have to reset it for you, or you will have to clear the entire system (see page 291).

CONTINUED

To change your security passcode:
Press and release the HFL Talk button before a command.

1. Say "**System setup**."
2. Say "**Change passcode**" after the prompts.
3. Follow the HFL prompts and say the new 4-digit passcode.
4. Follow the HFL prompts to confirm the number.

To select either a ring tone or a prompt as the incoming call notification*:
Press and release the HFL Talk button before a command.

1. Say "**System setup**."
2. Say "**Call notification**" after the prompts.
3. Follow the HFL prompts and say "**Ring tone**" or "**Prompt**." You can also say "**Off**" for no audible incoming call notification.

* : The default setting is a ring tone.

To activate or deactivate the auto transfer function:
If you get into the vehicle while you are on the phone, the call can be automatically transferred to HFL with the ignition switch in the ACCESSORY (I) or ON (II) position.

Press and release the HFL Talk button before a command.

1. Say "**System setup**."
2. Say "**Auto transfer**" after the prompts.
3. HFL will let you know if auto transfer is on or off, depending on the previous setting. Follow the HFL prompts to change the setting.

To clear the system:
This operation clears the passcodes, paired phones, all names in the HFL phonebook, and all imported phonebook data.

Press and release the HFL Talk button before a command.

1. Say "**System setup**."

2. Say "**Clear**" after the prompts.

3. Follow the HFL prompts to continue to complete the clearing procedure.

You can also clear the system when you have forgotten the passcode and cannot access HFL. When HFL asks you for the passcode, say "**System clear**." Paired phones, all names in the HFL phonebook and all imported phonebook data will be lost.

Quick Language Selection

Canadian models only

To quickly change the language:
Press and release the HFL Talk button before a command.

1. Say the language you want to change to in that language.

2. Follow the HFL prompts.

Change Language

Canadian models only

To change the system language between English and French:
Press and release the HFL Talk button before a command.

1. Say "**Change language**."

2. Follow the HFL prompts to change the language to English or French.

If you have not named your paired phone in the language you just selected, HFL will ask you to name it in the current language.

When French is your currently selected language, you can give voice commands in French.

***Bluetooth*® Wireless Technology**
The *Bluetooth*® name and logos are registered trademarks owned by Bluetooth SIG, Inc. and any use of such marks by Honda Motor Co., Ltd. is under license. Other trademarks and trade names are those of their respective owners.

As required by the FCC:
This device complies with Part 15 of the FCC rules. Operation is subject to the following two conditions: (1) This device may not cause harmful interference, and (2) this device must accept any interference received, including interference that may cause undesired operation.

Changes or modifications not expressly approved by the party responsible for compliance could void the user's authority to operate the equipment.

This device complies with Industry Canada Standard RSS-210.
Operation is subject to the following two conditions: (1) this device may not cause interference, and (2) this device must accept any interference that may cause undesired operation of the device.

Before Driving

Before you begin driving your vehicle, you should know what gasoline to use and how to check the levels of important fluids. You also need to know how to properly store luggage or packages. The information in this section will help you. If you plan to add any accessories to your vehicle, please read the information in this section first.

Break-in Period 294
Fuel Recommendation 294
Service Station Procedures 295
Refueling..... 295
Check Fuel Cap Message..... 296
Opening and Closing the Hood 297
Oil Check 298
Engine Coolant Check 298
Fuel Economy 299
Accessories and Modifications 302
Carrying Cargo 304

Break-in Period, Fuel Recommendation

Break-in Period

Help assure your vehicle's future reliability and performance by paying extra attention to how you drive during the first 600 miles (1,000 km). During this period:

- Avoid full-throttle starts and rapid acceleration.
- Do not change the oil until the scheduled maintenance time.
- Avoid hard braking for the first 200 miles (300 km).
- Do not tow a trailer.

You should also follow these recommendations with an overhauled or exchanged engine, or when the brakes are replaced.

Fuel Recommendation

Your vehicle is designed to operate on unleaded gasoline with a pump octane number of 87 or higher. Use of a lower octane gasoline can cause a persistent, heavy metallic rapping noise that can lead to engine damage.

We recommended using a quality gasoline containing detergent additives that help prevent fuel system and engine deposits.

In addition, in order to maintain good performance, fuel economy, and emissions control, we strongly recommend, in areas where it is available, the use of gasoline that does NOT contain manganese-based fuel additives such as MMT.

Use of gasoline with these additives may adversely affect performance, and cause the malfunction indicator lamp on your instrument panel to come on. If this happens, contact your authorized dealer for service.

Some gasoline today is blended with oxygenates such as ethanol or MTBE. Your vehicle is designed to operate on oxygenated gasoline containing up to 10% ethanol by volume and up to 15% MTBE by volume. Do not use gasoline containing methanol.

If you notice any undesirable operating symptoms, try another service station or switch to another brand of gasoline.

For further important fuel-related information for your vehicle, or information on gasoline that does not contain MMT, visit Owner Link at *owners.honda.com*. In Canada, visit *www.honda.ca* for additional information on gasoline.

Refueling

1. Park with the driver's side closest to the service station pump.

2. Open the fuel fill door by pulling on the handle located under the lower left corner of the dashboard.

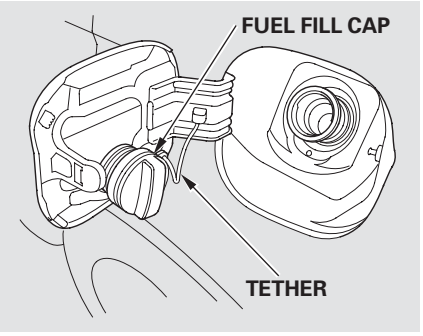

3. Remove the fuel fill cap slowly. You may hear a hissing sound as pressure inside the tank equalizes. The fuel fill cap is attached to the fuel filler with a tether. Place the cap in the holder on the fuel fill door.

4. Stop filling the tank after the fuel nozzle automatically clicks off. Do not try to "top off" the tank. This leaves some room in the fuel tank for the fuel to expand with temperature changes.

If the fuel nozzle keeps clicking off even though the tank is not full, there may be a problem with your vehicle's fuel vapor recovery system. The system helps keep fuel vapor from going into the atmosphere. Try filling at another pump. If this does not fix the problem, consult your dealer.

⚠ WARNING

Gasoline is highly flammable and explosive. You can be burned or seriously injured when handling fuel.

- Stop the engine, and keep heat, sparks, and flame away.
- Handle fuel only outdoors.
- Wipe up spills immediately.

CONTINUED

5. Screw the fuel fill cap back on until it clicks at least once. If you do not properly tighten the cap, the malfunction indicator lamp may come on (see page 395). You will also see a “CHECK FUEL CAP” message on the information display.

6. Push the fuel fill door closed until it latches.

Check Fuel Cap Message

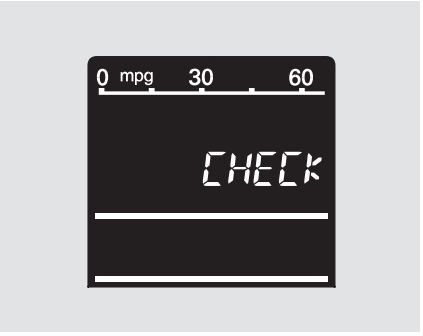

Your vehicle’s onboard diagnostic system will detect a loose or missing fuel fill cap as an evaporative system leak. The first time a leak is detected a “CHECK FUEL CAP” message appears on the information display.

Turn the engine off, and confirm the fuel fill cap is installed. If it is, loosen it, then retighten it until it clicks at least once. The message should go off after several days of normal driving once you tighten or replace the fuel fill cap. To scroll to another display, press the select/reset knob.

The “CHECK FUEL CAP” message will appear each time you restart the engine until the system turns the message off.

If the system still detects a leak in your vehicle’s evaporative emissions system, the malfunction indicator lamp (MIL) comes on. If the fuel fill cap was not already tightened, turn the engine off, and check or retighten the fuel fill cap until it clicks at least once. The MIL should go off after several days of normal driving once the cap is tightened or replaced. If the MIL does not go off, have your vehicle inspected by a dealer. For more information, see page 395 .

Opening and Closing the Hood

1. Park the vehicle, and set the parking brake. Pull the hood release handle located under the lower left corner of the dashboard. The hood will pop up slightly.

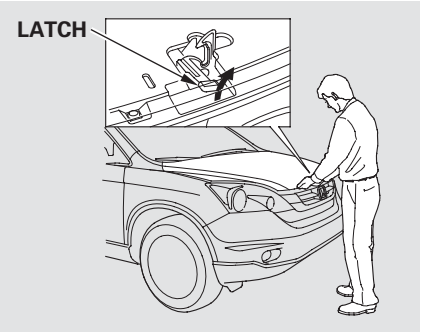

2. Reach in between the hood and the front grille with your fingers. The hood latch handle is above the “H” logo. Push this handle up until it releases the hood. Lift the hood.

   If the hood latch handle moves stiffly, or if you can open the hood without lifting the handle, the mechanism should be cleaned and lubricated.

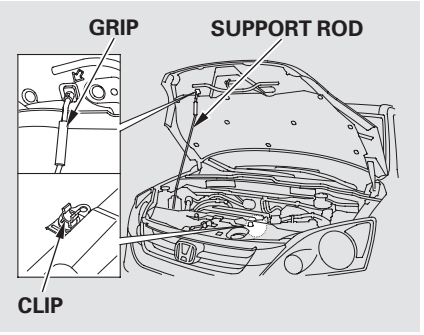

3. Holding the grip, pull the support rod out of its clip. Insert the end into the hole in the hood designated by an arrow.

To close the hood, lift it up slightly to remove the support rod from the hole. Put the support rod back into its holding clip. Lower the hood to about a foot (30 cm) above the fender, then let it drop. Make sure it is securely latched.

Service Station Procedures

Oil Check

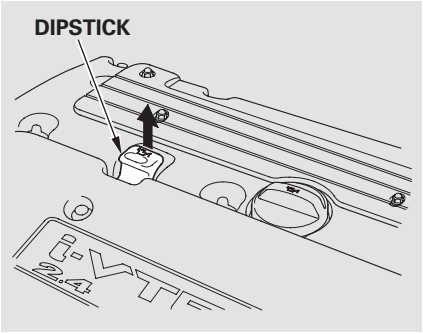

Wait a few minutes after turning the engine off before you check the oil.

1. Remove the dipstick (orange handle).

2. Wipe off the dipstick with a clean cloth or paper towel.

3. Insert the dipstick all the way back into its hole.

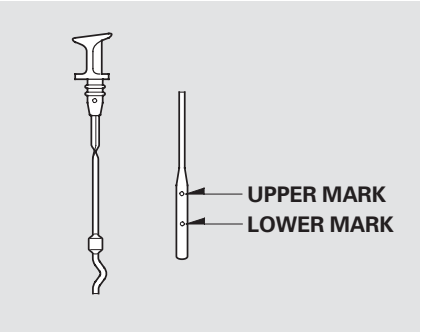

4. Remove the dipstick again, and check the level. It should be between the upper and lower marks.

If it is near or below the lower mark, see **Adding Engine Oil** on page 349 .

Engine Coolant Check

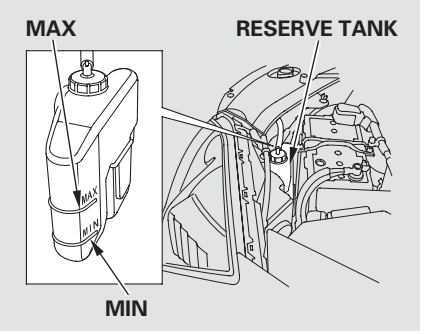

Look at the coolant level in the radiator reserve tank. Make sure it is between the MAX and MIN lines. If it is below the MIN line, see **Adding Engine Coolant** on page 352 for information on adding the proper coolant.

Refer to **Owner's Maintenance Checks** on page 346 for information about checking other items on your vehicle.

Actual Mileage and EPA Fuel Economy Estimates Comparison. Fuel economy is not a fixed number. It varies based on driving conditions, driving habits, and vehicle condition. Therefore, it is not possible for one set of estimates to predict fuel economy precisely for all drivers in all environments.

The EPA fuel economy estimates shown in the example to the right are a useful tool for comparison when buying a vehicle. EPA estimates include:

City MPG — Represents urban driving in light traffic. A range of miles per gallon achieved is also provided.

Highway MPG — Represents a mixture of rural and interstate driving, in a warmed-up vehicle, typical of longer trips in free-flowing traffic. A range of miles per gallon achieved is also provided.

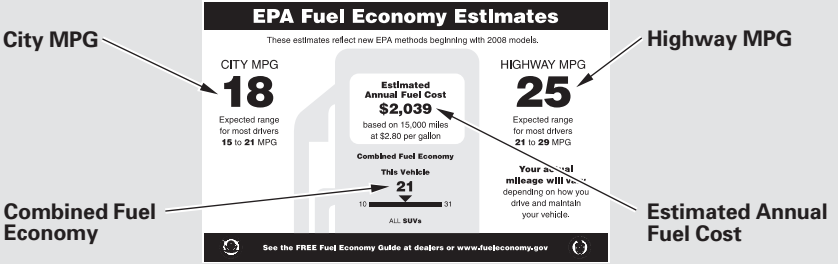

(Sample U.S. EPA label shown)

Combined Fuel Economy — Represents a combination of city and highway driving. The scale represents the range of combined fuel economy for other vehicles in the class.

Estimated Annual Fuel Cost — Provides an estimated annual fuel cost, based on 15,000 miles (20,000 km) per year multiplied by the cost per gallon (based on EPA fuel cost data) divided by the combined fuel economy.

For more information on fuel economy ratings and factors that affect fuel economy, visit *www.fueleconomy.gov* (Canada: Visit *www.vehicles.gc.ca*)

Fuel Economy

Fuel Economy Factors

The following factors can lower your vehicle's fuel economy:

- Aggressive driving (hard acceleration and braking)
- Excessive idling, accelerating and braking in stop-and-go traffic
- Cold engine operation (engines are more efficient when warmed up)
- Driving with a heavy load or the air conditioner running
- Improperly inflated tires

Improving Fuel Economy

Vehicle Maintenance

A properly maintained vehicle maximizes fuel economy. Poor maintenance can significantly reduce fuel economy. Always maintain your vehicle according to the maintenance messages displayed on the multi-information display (see **Owner's Maintenance Checks** on page 346). For example:

- **Use the recommended viscosity motor oil, displaying the API Certification Seal (see page 349).**

- **Maintain proper tire inflation** — An underinflated tire increases "rolling resistance," which reduces fuel economy.

- **Avoid carrying excess weight in your vehicle** — It puts a heavier load on the engine, increasing fuel consumption.

- **Keep your vehicle clean** — In particular, a build-up of snow or mud on your vehicle's underside adds weight and rolling resistance. Frequent cleaning helps your fuel economy.

Drive Efficiently

- **Drive moderately** — Rapid acceleration, abrupt cornering, and hard braking increase fuel consumption.

- **Observe the speed limit** — Aerodynamic drag has a big effect on fuel economy at speeds above 45 mph (75 km/h). Reduce your speed and you reduce the drag. Trailers, car top carriers, roof racks and bike racks are also big contributors to increased drag.

- **Avoid excessive idling** — Idling results in 0 miles per gallon (0 kms per liter).

- **Minimize the use of the air conditioning system** — The A/C puts an extra load on the engine which makes it use more fuel. Use the fresh-air ventilation when possible.

- **Plan and combine trips** — Combine several short trips into one. A warmed-up engine is more fuel efficient than a cold one.

Calculating Fuel Economy

Measuring Techniques

Direct calculation is the recommended source of information about your actual fuel economy. Using frequency of fill-ups or taking fuel gauge readings are NOT accurate measures of fuel economy. Fuel economy may improve over the first several thousand miles (kilometers).

Checking Your Fuel Economy

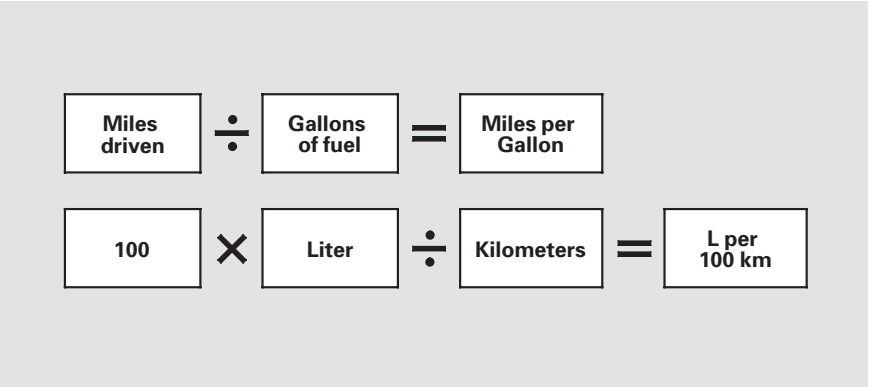

1) Fill the fuel tank until the nozzle automatically clicks off.
2) Reset trip counter to zero.
3) Record the total gallons (liters) needed to refill.
4) Follow one of the simple calculations above.

Accessories and Modifications

Modifying your vehicle, or installing some non-Honda accessories, can make your vehicle unsafe. Before you make any modifications or add any accessories, be sure to read the following information.

Accessories
Your dealer has Honda accessories that allow you to personalize your vehicle. These accessories have been designed and approved for your vehicle, and are covered by warranty.

Although non-Honda accessories may fit on your vehicle, they may not meet factory specifications, and could adversely affect your vehicle's handling, stability, and reliability.

⚠ WARNING

Improper accessories or modifications can affect your vehicle's handling, stability, and performance, and cause a crash in which you can be hurt or killed.

Follow all instructions in this owner's manual regarding accessories and modifications.

When properly installed, cellular phones, alarms, two-way radios, and low-powered audio systems should not interfere with your vehicle's computer controlled systems, such as your airbags, anti-lock brakes, and tire pressure monitoring system.

Before installing any accessory:

- Make sure the accessory does not obscure any lights, or interfere with proper vehicle operation or performance.
- Be sure electronic accessories do not overload electrical circuits (see page 397) or interfere with proper operation of your vehicle.
- Before installing any electronic accessory, have the installer contact your dealer for assistance. If possible, have your dealer inspect the final installation.
- Do not install accessories on the side pillars or across the rear windows. Accessories installed in these areas may interfere with proper operation of the side curtain airbags.

Modifying Your Vehicle
Removing parts from your vehicle, or replacing components, with non-Honda components could seriously affect your vehicle's handling, stability, and reliability.

Here are some examples:

- Lowering the vehicle with a non-Honda suspension kit that significantly reduces ground clearance can allow the undercarriage to hit speed bumps or other raised objects, which could cause the airbags to deploy.
- Raising your vehicle with a non-Honda suspension kit can affect the handling, stability, and reliability.
- Non-Honda wheels, because they are a universal design, can cause excessive stress on suspension components, and are not compatible with the tire pressure monitoring system (TPMS).
- Larger or smaller wheels and tires can interfere with the operation of your vehicle's anti-lock brakes and other systems.
- Modifying your steering wheel or any other part of your vehicle's safety features can make the systems ineffective.

If you plan to modify your vehicle, consult your dealer.

Carrying Cargo

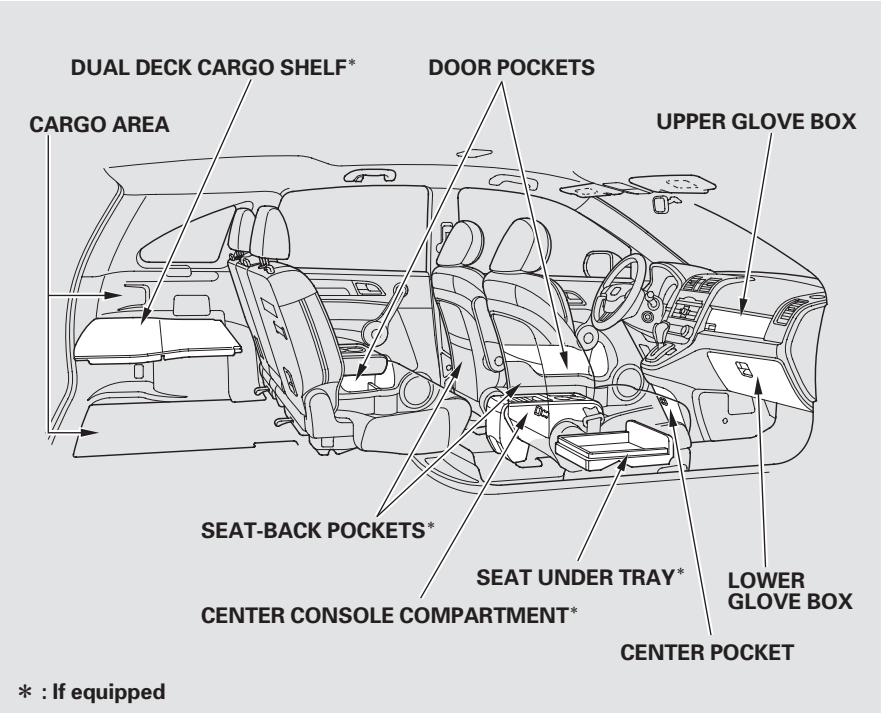

* : If equipped

Your vehicle has several convenient storage areas:

- Upper glove box
- Lower glove box
- Console compartment
- Door pockets
- Seat-back pockets
- Seat-under tray (if equipped)
- Center pocket
- Cargo area, including the rear seats when folded up or down.
- Upper and lower cargo areas with the dual deck cargo shelf (if equipped)
- Roof-rack (if equipped)

However, carrying too much cargo, or improperly storing it, can affect your vehicle's handling, stability, stopping distance, and tires, and make it unsafe. Before carrying any type of cargo, be sure to read the following pages.

Load Limits
The maximum load for your vehicle is 850 lbs (385 kg) for U.S. vehicles, and 395 kg for Canadian vehicles.

See Tire And Loading Information label attached to the driver's doorjamb.

Label Example

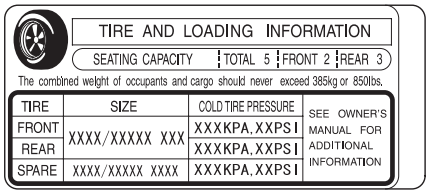
TIRE AND LOADING INFORMATION

SEATING CAPACITY | TOTAL 5 | FRONT 2 | REAR 3

The combined weight of occupants and cargo should never exceed 385kg or 850lbs.

TIRE	SIZE	COLD TIRE PRESSURE	SEE OWNER'S MANUAL FOR ADDITIONAL INFORMATION
FRONT	XXXX/XXXXX XXX	XXXKPA, XXPSI	
REAR		XXXKPA, XXPSI	
SPARE	XXXX/XXXXX XXXX	XXXKPA, XXPSI	

This figure includes the total weight of all occupants, cargo, and accessories, and the tongue load if you are towing a trailer.

⚠ WARNING

Overloading or improper loading can affect handling and stability and cause a crash in which you can be hurt or killed.

Follow all load limits and other loading guidelines in this manual.

Steps for Determining Correct Load Limit —

(1) Locate the statement "The combined weight of occupants and cargo should never exceed XXX kg or XXX lbs." on your vehicle's placard.

(2) Determine the combined weight of the driver and passenger that will be riding in your vehicle.

(3) Subtract the combined weight of the driver and passengers from XXX kg or XXX lbs.

(4) The resulting figure equals the available amount of cargo and luggage load capacity. For example, if the "XXX" amount equals 1,400 lbs. and there will be five 150 lb. passengers in your vehicle, the amount of available cargo and luggage load capacity is 650 lbs.
(1,400 − 750 (5 × 150) = 650 lbs.)

(5) Determine the combined weight of luggage and cargo being loaded on the vehicle. That weight may not safely exceed the available cargo and luggage load capacity calculated in Step 4.

(6) If your vehicle will be towing a trailer, load from your trailer will be transferred to your vehicle. Consult this manual to determine how this reduces the available cargo and luggage load capacity of your vehicle.

CONTINUED

Carrying Cargo

Example 1	**Max Load 850 lbs (395 kg)***	≧ **Passenger Weight 150 lbs x 2 = 300 lbs (68 kg x 2 = 136 kg)**	+ **Cargo Weight 550 lbs (259 kg)***
Example 2	**Max Load 850 lbs (395 kg)***	≧ **Passenger Weight 150 lbs x 4 = 600 lbs (68 kg x 4 = 272 kg)**	+ **Cargo Weight 250 lbs (123 kg)***
Example 3	**Max Load 850 lbs (395 kg)***	≧ **Passenger Weight 150 lbs x 5 = 750 lbs (68 kg x 5 = 340 kg)**	+ **Cargo Weight 100 lbs (55 kg)***

*: Canadian models

In addition, the total weight of the vehicle, all occupants, accessories, cargo, and trailer tongue load must not exceed the Gross Vehicle Weight Rating (GVWR) or the Gross Axle Weight Rating (GAWR). Both are on a label on the driver's doorjamb.

Carrying Cargo in the Passenger Compartment

- Store or secure all items that could be thrown around and hurt someone during a crash.
- Be sure items placed on the floor behind the front seats cannot roll under the seats and interfere with the driver's ability to operate the pedals, the operation of the seats, or the operation of the sensors under the seats.
- Keep the lower glove box closed while driving. If it is open, a passenger could injure their knees during a crash or sudden stop.
- If you fold the rear seats up or down, tie down items that could be thrown about the vehicle during a crash or sudden stop. Also, keep all cargo below the bottom of the windows. If it is higher, it could interfere with the proper operation of the side curtain airbags.

If equipped
Do not use the dual deck cargo shelf with any rear seat folded up or down.

Carrying Cargo in the Cargo Area or on a Roof Rack

- Distribute cargo evenly on the floor of the cargo area, placing the heaviest items on the bottom and as far forward as possible. Tie down items that could be thrown about the vehicle during a crash or sudden stop.
- Do not stack items higher than the back of the rear seats. They can block your view and be thrown around the vehicle during a crash.
- If you carry large items that prevent you from closing the tailgate, exhaust gas can enter the passenger area. To avoid the possibility of **carbon monoxide poisoning**, follow the instructions on page 55 .

CONTINUED

- If you carry any items on a roof rack, be sure the total weight of the rack and the items does not exceed 165 lbs (75 kg).

If you use an accessory roof rack, the roof rack weight limit may be lower. Refer to the information that came with your roof rack.

Carrying Cargo on the Dual Deck Cargo Shelf

If equipped

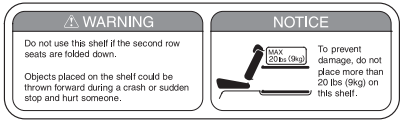

U.S. model is shown.

Do not put any items on the dual deck cargo shelf that could block your view or be thrown around the vehicle during a crash.

Do not use the dual deck cargo shelf if the rear seats are folded down.

Do not exceed the dual deck cargo shelf load limit of 20 lbs on U.S. models, and 10 kg on Canadian models.

Optional Separation Net

The separation net can be used to hold back soft, lightweight items stored in the cargo area. Heavy items should be properly secured on the floor of the cargo area. The net may not prevent heavy items from being thrown forward in a crash or a sudden stop.

Cargo Hooks

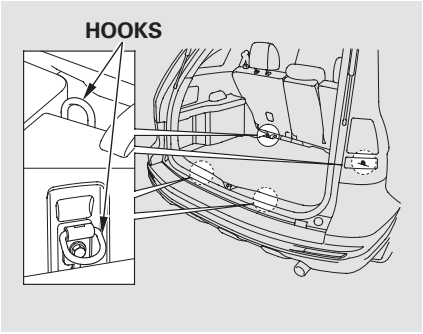

The four hooks on the floor can be used to install a net for securing items.

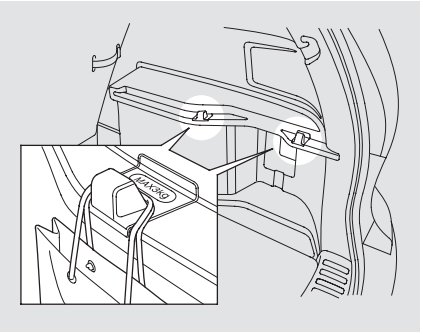

If equipped
Your vehicle also has cargo hooks on the side panel in the cargo area. They are designed to hold light items. Heavy objects may damage the hook. Make sure any items put on each hook weigh less than 6.5 lbs (3 kg).

Driving

This section gives you tips on starting the engine under various conditions, and how to operate the automatic transmission. It also includes important information on parking your vehicle, the braking system, the vehicle stability assist (VSA®) system, the tire pressure monitoring system (TPMS), and facts you need if you are planning to tow a trailer or drive off-highway.

Driving Guidelines..... 312
Preparing to Drive 313
Starting the Engine..... 314
Automatic Transmission..... 315
Parking..... 320
Braking System..... 321
Anti-lock Brakes (ABS) 322
Vehicle Stability Assist (VSA®), aka Electronic Stability Control (ESC), System 324
Tire Pressure Monitoring System (TPMS) 326
Towing a Trailer 329
Towing Your Vehicle Behind a Motorhome..... 334
Off-Highway Driving Guidelines..... 336

Driving Guidelines

Your vehicle has higher ground clearance that allows you to travel over bumps, obstacles, and rough terrain. It also provides good visibility so you can anticipate problems earlier.

Because your vehicle rides higher off the ground, it has a high center of gravity that can cause it to roll over if you make abrupt turns. Utility vehicles have a significantly higher roll over rate than other types of vehicles.

To prevent rollovers or loss of control:

- Take corners at slower speeds than you would with a passenger vehicle.
- Avoid sharp turns and abrupt maneuvers whenever possible.
- Do not modify your vehicle in any way that would raise the center of gravity.
- Do not carry heavy cargo on the roof.

Four-wheel drive models
Your vehicle is equipped with a four-wheel drive (4WD) system. When the system senses a loss of front-wheel traction, it automatically transfers some power to the rear wheels. This gives you better traction and mobility.

You still need to exercise the same care when accelerating, steering, and braking that you would in a two-wheel drive vehicle.

See page 336 for off-highway driving guidelines.

Preparing to Drive

You should do the following checks and adjustments before you drive your vehicle.

1. Make sure all windows, mirrors, and outside lights are clean and unobstructed. Remove frost, snow, or ice.

2. Check that the hood is fully closed.

3. Visually check the tires. If a tire looks low, use a gauge to check its pressure.

4. Check that any items you may be carrying are stored properly or fastened down securely.

5. Check the seat adjustment (see pages 97 and 98).

6. Check the adjustment of the inside and outside mirrors (see page 114).

7. Check the steering wheel adjustment (see page 81).

8. Make sure the doors and the tailgate are securely closed and locked.

9. Fasten your seat belt. Check that your passengers have fastened their seat belts (see page 15).

10. When you start the engine, check the gauges and indicators in the instrument panel (see pages 61 to 68).

Starting the Engine

1. Apply the parking brake.
2. In cold weather, turn off all electrical accessories to reduce the drain on the battery.
3. Make sure the shift lever is in Park. Press on the brake pedal.
4. Without touching the accelerator pedal, turn the ignition key to the START (III) position. Do not hold the key in the START (III) position for more than 15 seconds at a time. If the engine does not start right away, pause for at least 10 seconds before trying again.

NOTICE

The immobilizer system protects your vehicle from theft. If an improperly-coded key (or other device) is used, the engine's fuel system is disabled. For more information, see page 83 .

NOTICE

The engine is harder to start in cold weather. Also, the thinner air found at altitudes above 8,000 feet (2,400 meters) adds to this problem.

Shift Lever Position Indicators

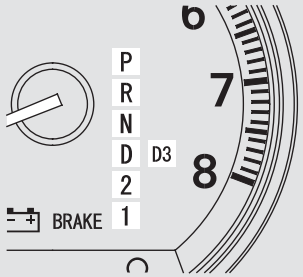

U.S. model is shown.

These indicators on the instrument panel show which position the shift lever is in.

The “D” indicator comes on for a few seconds when you turn the ignition switch to the ON (II) position. If it flashes while driving (in any shift position), it indicates a possible problem in the transmission.

If the malfunction indicator lamp comes on along with the “D” indicator, there is a problem with the automatic transmission control system. Avoid rapid acceleration, and have the transmission checked by your dealer as soon as possible.

Shifting

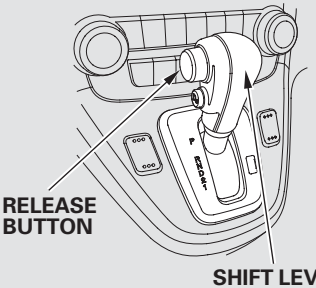

To shift from any position, press firmly on the brake pedal and the release button on the side of the shift lever. You cannot shift out of Park when the ignition switch is in the LOCK (0) or ACCESSORY (I) position.

CONTINUED

Automatic Transmission

To shift from:	Do this:
P to R	Press the brake pedal and press the shift lever release button.
R to P N to R D to 2 2 to 1	Press the shift lever release button.
1 to 2 2 to D D to N N to D R to N	Move the shift lever.
D3 to D D to D3	Press the D3 button.

Park (P) — This position mechanically locks the transmission. Use Park whenever you are turning off or starting the engine. To shift out of Park, you must press on the brake pedal and have your foot off the accelerator pedal. Press the release button on the side of the shift lever to move it.

If you have done all of the above and still cannot move the lever out of Park, see **Shift Lock Release** on page 319 .

To avoid transmission damage, come to a complete stop before shifting into Park. You must also press the release button to shift into Park. The shift lever must be in Park before you can remove the key from the ignition switch.

Reverse (R) — Press the brake pedal and the release button on the side of the shift lever to shift from Park to reverse. To shift from reverse to neutral, come to a complete stop and then shift. Press the release button before shifting into reverse from neutral.

Neutral (N) — Use neutral if you need to restart a stalled engine, or if it is necessary to stop briefly with the engine idling. Shift to the Park position if you need to leave your vehicle for any reason. Press on the brake pedal when you are moving the shift lever from neutral to another gear.

Drive (D) — Use this position for your normal driving. The transmission automatically selects a suitable gear (1 through 5) for your speed and acceleration. You may notice the transmission shifting up at higher engine speeds when the engine is cold. This helps the engine warm up faster.

D3 Mode

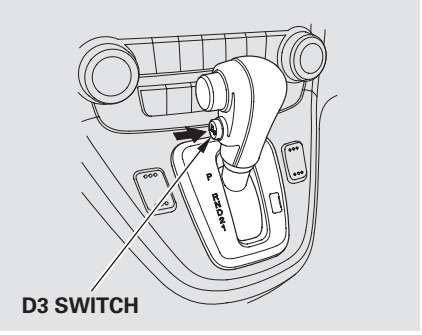

Press the D3 switch on the side of the shift lever to turn this mode on or off; the D3 mode indicator comes on whenever the D3 mode is selected.

D3 mode can be turned on or off only when the ignition switch is in the ON (II) position and the shift lever is in the D position.

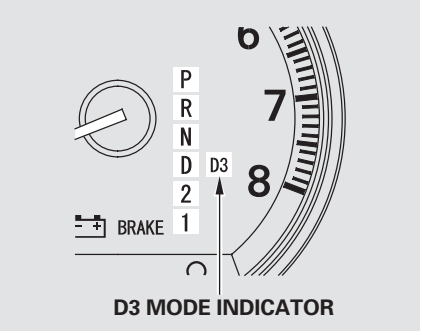

When the D3 mode is on, the transmission selects only the first three gears. Use D3 mode when towing a trailer, or to provide engine braking when going down a steep hill. D3 mode can also keep the transmission from cycling between third and fourth gears in stop-and-go driving.

CONTINUED

Automatic Transmission

Shifting out from the D position will cancel the D3 mode, and the D3 indicator will go out. Selecting the D position again will resume the D3 mode and the indicator comes on.

Turning the ignition switch to the LOCK (0) position turns this mode off. When you restart the engine, select the D position and press the D3 mode switch again to use this mode.

The D3 mode indicator also comes on for a few seconds when you turn the ignition switch to the ON (II) position.

Second (2) — To shift to second, press the release button on the side of the shift lever. This position locks the transmission in second gear. It does not downshift to first gear when you come to a stop.

Use second gear:

- For more power when climbing.
- To increase engine braking when going down steep hills.
- For starting out on a slippery surface or in deep snow.
- To help reduce wheel spin.
- When driving downhill with a trailer.

First (1) — To shift from second to first, press the release button on the side of the shift lever. This position locks the transmission in first gear. By upshifting and downshifting through 1, 2, D3, and D, you can operate the transmission much like a manual transmission without a clutch pedal.

If you shift into first gear when the vehicle speed is above 31 mph (50 km/h), the transmission shifts into second gear first to avoid sudden engine braking.

Engine Speed Limiter

If you exceed the maximum speed for the gear you are in, the engine speed will enter into the tachometer's red zone. If this occurs, you may feel the engine cut in and out. This is caused by a limiter in the engine's computer controls. The engine will run normally when you reduce the rpm below the red zone.

Shift Lock Release
This allows you to move the shift lever out of Park if the normal method of pushing on the brake pedal and pressing the release button does not work.

1. Set the parking brake.

2. Remove the key from the ignition switch.

3. Put a cloth on the edge of the shift lock release slot cover to prevent scratches. Using a small flat-tip screwdriver or metal fingernail file, carefully pry on the edge of the cover to remove it.

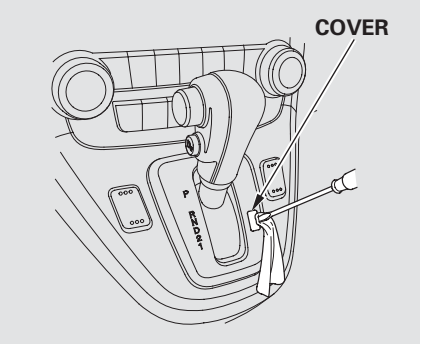

4. Insert the key in the shift lock release slot.

5. Push down on the key while you press the release button on the shift lever and move the shift lever out of Park to neutral.

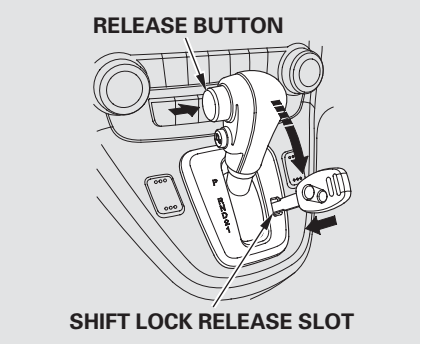

6. Remove the key from the shift lock release slot, then reinstall the cover. Make sure the notch on the cover is on the right side. Insert the key into the ignition switch, press the brake pedal, and restart the engine.

If you need to use the shift lock release, it means your vehicle is developing a problem. Have the vehicle checked by your dealer.

Parking

Always use the parking brake when you park your vehicle. Make sure the parking brake is set firmly, or your vehicle may roll if it is parked on an incline.

Set the parking brake before you put the transmission in Park. This keeps the vehicle from moving and putting pressure on the parking mechanism in the transmission.

Parking Tips

- Make sure the moonroof (if equipped) and the windows are closed.
- Turn off the lights.
- Place any packages, valuables, etc. in the cargo area or take them with you.
- Lock the doors and the tailgate.

If equipped

- Check the indicator on the instrument panel to verify that the security system is set.
- Never park over dry leaves, tall grass, or other flammable materials. The hot three way catalytic converter could cause these materials to catch on fire.
- If the vehicle is facing uphill, turn the front wheels away from the curb.
- If the vehicle is facing downhill, turn the front wheels toward the curb.
- Make sure the parking brake is fully released before driving away. Driving with the parking brake partially set can overheat or damage the rear brakes.

Your vehicle is equipped with disc brakes at all four wheels. A power assist helps reduce the effort needed on the brake pedal. The emergency brake assist system increases the stopping force when you depress the brake pedal hard in an emergency situation. The anti-lock brake system (ABS) helps you retain steering control when braking very hard.

Resting your foot on the pedal keeps the brakes applied lightly, builds up heat, reduces their effectiveness and reduces brake pad life. In addition, fuel economy can be reduced. It also keeps your brake lights on all the time, confusing drivers behind you.

Constant application of the brakes when going down a long hill builds up heat and reduces their effectiveness. Use the engine to assist the brakes by taking your foot off the accelerator and downshifting to a lower gear.

Check your brakes after driving through deep water. Apply the brakes moderately to see if they feel normal. If not, apply them gently and frequently until they do. Be extra cautious and alert in your driving.

Braking System Design
The hydraulic system that operates the brakes has two separate circuits. Each circuit works diagonally across the vehicle (the left-front brake is connected with the right-rear brake, etc.). If one circuit should develop a problem, you will still have braking at two wheels.

Brake Pad Wear Indicators
The front and rear disc brakes on all models have audible brake wear indicators.

If the brake pads need replacing, you will hear a distinctive, metallic screeching sound when you apply the brake pedal. If you do not have the brake pads replaced, they will screech all the time. It is normal for the brakes to occasionally squeal or squeak when you apply them.

Anti-lock Brakes (ABS)

The anti-lock brake system (ABS) helps prevent the wheels from locking up, and helps you retain steering control by pumping the brakes rapidly, much faster than a person can do it.

The electronic brake distribution (EBD) system, which is part of the ABS, also balances the front-to-rear braking distribution according to vehicle loading.

You should never pump the brake pedal. Let the ABS work for you by always keeping firm, steady pressure on the brake pedal. This is sometimes referred to as “stomp and steer.”

You will feel a pulsation in the brake pedal when the ABS activates, and you may hear some noise. This is normal: it is the ABS rapidly pumping the brakes. On dry pavement, you will need to press on the brake pedal very hard before the ABS activates. However, you may feel the ABS activate immediately if you are trying to stop on snow or ice.

ABS Indicator

If this indicator comes on, the anti-lock function of the braking system has shut down. The brakes still work like a conventional system, but without anti-lock. You should have your dealer inspect your vehicle as soon as possible.

If the ABS indicator comes on while driving, test the brakes as shown on page 396 .

If the ABS indicator and the brake system indicator come on together, and the parking brake is fully released, the EBD system may also be shut down.

Test your brakes as instructed on page 396 . If the brakes feel normal, drive slowly and have your vehicle repaired by your dealer as soon as possible. Avoid sudden hard braking which could cause the rear wheels to lock up and possibly lead to a loss of control.

Important Safety Reminders
ABS does not reduce the time or distance it takes to stop the vehicle. It only helps with the steering control during braking.

ABS will not prevent a skid that results from changing direction abruptly, such as trying to take a corner too fast or making a sudden lane change. Always drive at a safe speed for the road and weather conditions.

ABS cannot prevent a loss of stability. Always steer moderately when you are braking hard. Severe or sharp steering wheel movement can still cause your vehicle to veer into oncoming traffic or off the road.

A vehicle with ABS may require a longer distance to stop on loose or uneven surfaces, such as gravel or snow, than a vehicle without anti-lock.

Vehicle Stability Assist (VSA®), aka Electronic Stability Control (ESC), System

The vehicle stability assist (VSA) system helps to stabilize the vehicle during cornering if the vehicle turns more or less than desired. It also assists you in maintaining traction while accelerating on loose or slippery road surfaces. It does this by regulating the engine's output and by selectively applying the brakes.

When VSA activates, you may notice that the engine does not respond to the accelerator in the same way it does at other times. There may also be some noise from the VSA hydraulic system. You will also see the VSA system indicator blink.

The VSA system cannot enhance the vehicle's driving stability in all situations and does not control your vehicle's entire braking system. It is still your responsibility to drive and corner at reasonable speeds and to leave a sufficient margin of safety.

VSA OFF Indicator

When VSA is off, the VSA OFF indicator comes on as a reminder.

Vehicle Stability Assist (VSA) System Indicator

When VSA activates, you will see the VSA system indicator blink.

If this indicator comes on while driving, pull to the side of the road when it is safe, and turn off the engine. Reset the system by restarting the engine. If the VSA system indicator stays on or comes back on while driving, have the VSA system inspected by your dealer.

NOTE: The main function of the VSA system is generally known as Electronic Stability Control (ESC). The system also includes a traction control function.

If the low tire pressure indicator or TPMS indicator comes on, the VSA system automatically turns on even if the VSA system is turned off by pressing the VSA OFF switch (see page 325). If this happens, you cannot turn the VSA system off by pressing the VSA OFF switch again.

Without VSA, your vehicle will have normal braking and cornering ability, but it will not have VSA traction and stability enhancement.

Vehicle Stability Assist (VSA®), aka Electronic Stability Control (ESC), System

VSA OFF Switch

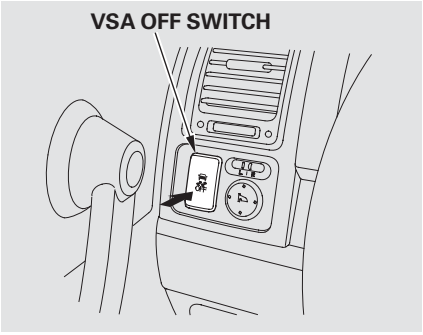

This switch is under the driver's side vent. To turn the VSA system on and off, press and hold it until you hear a beep.

When VSA is off, the VSA OFF indicator comes on as a reminder. Press and hold the switch again. It turns the system back on.

VSA is turned on every time you start the engine, even if you turned it off the last time you drove the vehicle.

In certain unusual conditions when your vehicle gets stuck in shallow mud or fresh snow, it may be easier to free it with the VSA temporarily switched off. When the VSA system is off, the traction control system is also off. You should only attempt to free your vehicle with the VSA off if you are not able to free it when the VSA is on.

Immediately after freeing your vehicle, be sure to switch the VSA on again. We do not recommend driving your vehicle with the VSA and traction control systems switched off.

VSA and Tire Sizes

Driving with varying tire or wheel sizes may cause the VSA to malfunction. When replacing tires, make sure they are the same size and type as your original tires (see page 374).

If you install winter tires, make sure they are the same size as those that were originally supplied with your vehicle. Exercise the same caution during winter driving as you would if your vehicle was not equipped with VSA.

Tire Pressure Monitoring System (TPMS)

Your vehicle is equipped with a tire pressure monitoring system (TPMS) that turns on every time you start the engine and monitors the pressure in your tires while driving.

Each tire has its own pressure sensor (not including the spare tire). If the air pressure of a tire becomes significantly low while driving, the sensor in that tire immediately sends a signal that causes the low tire pressure indicator to come on.

Low Tire Pressure Indicator

When the low tire pressure indicator is on, one or more of your tires is significantly underinflated. You should stop and check your tires as soon as possible, and inflate them to the proper pressure as indicated on the vehicle's tire information placard.

If you think you can safely drive a short distance to a service station, proceed slowly, and inflate the tire to the recommended pressure shown on the driver's doorjamb.

If the tire is flat, or if the tire pressure is too low to continue driving, replace the tire with the compact spare tire (see page 382).

If you cannot make the low tire pressure indicator go out after inflating the tires to the specified values, have your dealer check the system as soon as possible.

Driving on a significantly under inflated tire causes the tire to overheat and can lead to tire failure. Underinflation also reduces fuel efficiency and tire tread life, and may affect the vehicle's handling and stopping ability.

Because tire pressure varies by temperature and other conditions, the low tire pressure indicator may come on unexpectedly.

For example, if you check and fill your tires in a warm area, then drive in extremely cold weather, the tire pressure will be lower than measured and could be underinflated and cause the low tire pressure indicator to come on. Or, if you check and adjust your tire pressure in cooler conditions, and drive into extremely hot conditions, the tire may become overinflated. However, the low tire pressure indicator will not come on if the tires are overinflated.

Refer to page 370 for tire inflation guidelines.

Although your tire pressure is monitored, you must manually check the tire pressures monthly.

Each tire, including the spare, should be checked monthly when cold, and set to the recommended inflation pressure as specified on the tire information label and in the owner's manual (see page 371).

TPMS Tire Pressure Monitoring System (TPMS) Indicator

This indicator comes on and stays on if there is a problem with the tire pressure monitoring system.

If this happens, the system will shut off and no longer monitor tire pressures. Have the system checked by your dealer as soon as possible.

If the low tire pressure indicator or TPMS indicator comes on, the VSA system automatically turns on even if the VSA system is turned off by pressing the VSA OFF switch (see page 325). If this happens, you cannot turn the VSA system off by pressing the VSA OFF switch again.

When you restart the vehicle with the compact spare tire, the TPMS indicator may also come on and stay on after driving several miles (kilometers).

Tire Pressure Monitoring System (TPMS)

Changing a Tire with TPMS
If you have a flat tire, the low tire pressure indicator will come on. Replace the flat tire with the compact spare tire (see page 382).

Each wheel (except the compact spare tire wheel) is equipped with a tire pressure sensor. You must use TPMS specific wheels. It is recommended that you always have your tires serviced by your dealer or qualified technician.

After you replace the flat tire with the compact spare tire, the low tire pressure indicator stays on. This is normal; the system is not monitoring the spare tire pressure. Manually check the spare tire pressure to be sure it is correct. After several miles (kilometers) driving with the compact spare tire, the TPMS indicator comes on and the low tire pressure indicator goes off.

The low tire pressure indicator or the TPMS indicator will go off, after several miles (kilometers) driving, when you replace the spare tire with the specified regular tire equipped with the tire pressure monitor sensor.

Never use a puncture-repairing agent in a flat tire. If used, you will have to replace the tire pressure sensor. Have the flat tire repaired by your dealer as soon as possible.

As required by the FCC:
This device complies with Part 15 of the FCC rules. Operation is subject to the following two conditions: (1) This device may not cause harmful interference, and (2) this device must accept any interference received, including interference that may cause undesired operation.

Changes or modifications not expressly approved by the party responsible for compliance could void the user's authority to operate the equipment.

This device complies with Industry Canada Standard RSS-210.
Operation is subject to the following two conditions: (1) this device may not cause interference, and (2) this device must accept any interference that may cause undesired operation of the device.

Your vehicle has been designed primarily to carry passengers and their cargo. You can also use it to tow a trailer if you carefully observe the load limits, use the proper equipment, and follow the guidelines in this section.

Break-In Period
Avoid towing a trailer during your vehicle's first 600 miles (1,000 km) (see page 294).

Be sure to read the **Off-Highway Driving Guidelines** section on page 336 if you plan to tow off paved surfaces.

⚠ WARNING

Exceeding any load limit or improperly loading your vehicle and trailer can cause a crash in which you can be seriously hurt or killed.

Check the loading of your vehicle and trailer carefully before starting to drive.

Load Limits

Total Trailer Weight: The maximum allowable weight of the trailer and everything in or on it must not exceed 1,500 lbs (680 kg). Towing a load that is too heavy can seriously affect your vehicle's handling and performance. It can also damage the engine and drivetrain.

CONTINUED

Towing a Trailer

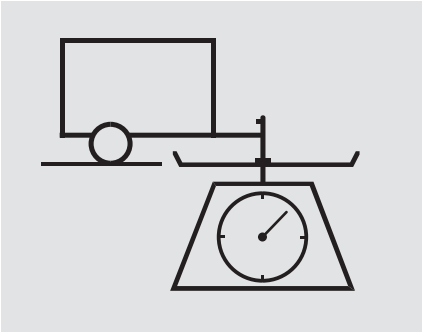

Tongue Load: The weight that the tongue of a fully-loaded trailer puts on the hitch should be approximately 10% of the total trailer weight. Too much tongue load reduces front-tire traction and steering control. Too little tongue load can make the trailer unstable and cause it to sway.

To achieve a proper tongue load, start by loading 60% of the load toward the front of the trailer and 40% toward the rear, then re-adjust the load as needed.

Gross Vehicle Weight Rating (GVWR) — The maximum allowable weight of the vehicle, all occupants, all accessories, all cargo, and the tongue load is 4,560 lbs (2,070 kg).

Gross Axle Weight Ratings (GAWR) — The maximum allowable weight of the vehicle, all occupants, all accessories, all cargo, and the tongue load must not exceed 2,310 lbs (1,050 kg) on the front axle, and 2,290 lbs (1,040 kg) on the rear axle.

Gross Combined Weight Rating (GCWR) — The maximum allowable weight of the fully loaded vehicle and trailer is 6,060 lbs (2,750 kg)

Checking Loads
The best way to confirm that all loads are within limits is to check them at a public scale. For public scales in your area, check your local phone book, or contact your trailer dealer or rental agency for assistance.

If you cannot get to a public scale, you can estimate the total trailer weight by adding the weight of your trailer (as quoted by the manufacturer) with everything in or on the trailer.

If you normally pull the same load each time you tow a trailer, you can use a suitable scale or a special tongue load gauge to check the tongue load the first time you set up a towing combination (a fully loaded vehicle and trailer), then recheck the tongue load whenever the conditions change.

Towing Equipment and Accessories

Towing can require a variety of equipment, depending on the size of your trailer, how it will be used, how much load you are towing, and where you tow.

Discuss your needs with your trailer sales or rental agency, and follow the guidelines in this section. Also make sure that all equipment is properly installed and maintained, and that it meets federal, state, province, territory, and local regulations.

Hitches

Any hitch used on your vehicle must be properly bolted to the underbody.

Safety Chains

Always use safety chains when you tow a trailer. Make sure the chains are secured to the trailer and hitch, and that they cross under the tongue and can catch the trailer if it becomes unhitched. Leave enough slack to allow the trailer to turn corners easily, but do not let the chains drag on the ground.

Trailer Brakes

There are two common types of trailer brakes: surge and electric. Surge brakes are common for boat trailers, since the brakes will get wet.

If you choose electric brakes, be sure they are electronically actuated. Do not attempt to tap into your vehicle's hydraulic system. No matter how successful it may seem, any attempt to attach trailer brakes to your vehicles hydraulic system will lower braking effectiveness and create a potential hazard.

See your trailer dealer or rental agency for more information on installing electric brakes.

Trailer Lights

Trailer lights and equipment must comply with federal, state, province/territory, and local regulations. Check trailer light requirements for the areas where you plan to tow, and use only equipment designed for your vehicle.

CONTINUED

Towing a Trailer

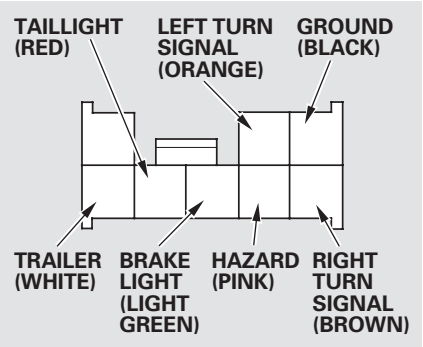

Your vehicle has a trailer lighting connector located behind the left side panel in the cargo area. Refer to the drawing above for the wiring color code and purpose of each pin.

If you use a non-Honda trailer lighting harness and converter, you can get the connector and pins that mate with the connector in your vehicle from your dealer.

Since lighting and wiring vary by trailer type and brand, you should have a qualified technician install a suitable connector between the vehicle and the trailer. Improper equipment or installation can cause damage to your vehicle's electrical system and affect your vehicle warranty.

Additional Towing Equipment

Many states and Canadian provinces/territories require special outside mirrors when towing a trailer. Even if they don't, you should install special mirrors if you cannot clearly see behind you, or if the trailer creates a blind spot.

Ask your trailer sales or rental agency if any other items are recommended or required for your towing situation.

Pre-Tow Checklist

When preparing to tow, and before driving away, be sure to check the following:

- The vehicle has been properly serviced, and the suspension and the cooling system are in good operating condition.
- The trailer has been properly serviced and is in good condition.
- All weights and loads are within limits.
- The hitch, safety chains, and any other attachments are secure.
- All items in or on the trailer are properly secured and cannot shift while you drive.

- The lights and brakes on your vehicle and the trailer are working properly.

- Your vehicle tires and spare are properly inflated, and the trailer tires and spare are inflated as recommended by the trailer maker.

Driving Safely With a Trailer
The added weight, length, and height of a trailer will affect your vehicle's handling and performance, so driving with a trailer requires some special driving skills and techniques.

For your safety and the safety of others, take time to practice driving maneuvers before heading for the open road, and follow the guidelines in this section.

Towing Speeds and Gears
Drive slower than normal in all driving situations, and obey posted speed limits for vehicles with trailers. Use the D position when towing a trailer on level roads. D3 is the proper shift lever position to use when towing a trailer in hilly terrain. (See "***Driving on Hills***" in the following column for additional gear information.)

Making Turns and Braking
Make turns more slowly and wider than normal. The trailer tracks a smaller arc than your vehicle, and it can hit or run over something the vehicle misses. Allow more time and distance for braking. Do not brake or turn suddenly as this could cause the trailer to jackknife or turn over.

Driving on Hills
When climbing hills, closely watch your temperature gauge. If it nears the red (Hot) mark, turn the air conditioning off, reduce speed and, if necessary, pull to the side of the road to let the engine cool.

When driving down hills, reduce your speed and use the D3 position. Do not "ride" the brakes, and remember it will take longer to slow down and stop when towing a trailer.

If you must stop when facing uphill, use the foot brake or parking brake. Do not try to hold the vehicle in place by pressing on the accelerator, as this can cause the automatic transmission to overheat.

CONTINUED

Towing a Trailer, Towing Your Vehicle Behind a Motorhome

Handling Crosswinds and Buffeting
Crosswinds and air turbulence caused by passing trucks can disrupt your steering and cause the trailer to sway. When being passed by a large vehicle, keep a constant speed, and steer straight ahead. Do not try to make quick steering or braking corrections.

Backing Up
Always drive slowly and have someone guide you when backing up. Grip the *bottom* of the steering wheel, then turn the wheel to the left to get the trailer to move to the left, and turn the wheel right to move the trailer to the right.

Parking
Follow all normal precautions when parking, including firmly setting the parking brake and putting the transmission in Park. Also, place wheel chocks at each of the trailer's tires.

Towing Your Vehicle Behind a Motorhome
Your vehicle can be towed behind a motorhome at legal highway speeds up to 65 mph (100 km/h). Do not exceed 65 mph (100 km/h). Otherwise, severe transmission damage will occur. To avoid damage to the 4WD system, your vehicle must be towed with all four wheels on the ground (flat towing).

When purchasing a tow bar, make sure you select a reputable manufacturer and installer. Follow the manufacturer's attachment instructions carefully.

Perform the following procedure every day immediately before you begin towing. Otherwise severe automatic transmission damage will occur.

- Check the transmission fluid level (see page 355). *Do not overfill.*
- Start the engine.
- Press on the brake pedal. Move the shift lever through all its positions.
- Shift to D position and hold for 5 seconds, then to N. Let the engine run for 3 minutes, then turn it off.
- Release the parking brake.
- Leave the ignition switch in the ACCESSORY (I) position so the steering wheel does not lock. Make sure the radio and any items plugged into the accessory power sockets are turned off so you do not run down the battery.

Towing Your Vehicle Behind a Motorhome

NOTICE

The steering system can be damaged if the steering wheel is locked. Leave the ignition switch in the ACCESSORY (I) position, and make sure the steering wheel turns freely before you begin towing.

Extended Towing

If you tow more than 8 hours in one day, you should repeat the above procedure at least every 8 hours (when you stop for fuel, etc.)

NOTICE

Failure to follow the recommended instructions exactly will result in severe automatic transmission damage. If you cannot shift the transmission or start the engine, your vehicle must be transported on a flat-bed truck or trailer.

When towing your vehicle for long periods, remove the 7.5 A Accessory Radio fuse to reduce drain on battery. This fuse is located in the interior fuse box and is shown as number 34 below.

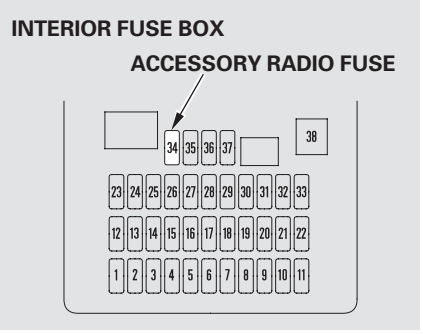

Only remove the fuse after you have performed the transmission shifting procedure, and the key is in the ACCESSORY (I) position. Store the fuse in an obvious location (center tray, coin pockets, etc) as a reminder to re-install the fuse before driving the vehicle.

NOTICE

Severe transmission damage will occur if the vehicle is shifted from reverse to neutral and then towed with the drive wheels on the ground.

If you tow a CR-V behind a motorhome, the transmission fluid must be changed every 2 years or 30,000 miles (48,000 km), whichever comes first.

Off-Highway Driving Guidelines

General Information

Your vehicle has been designed primarily for use on pavement. But its higher ground clearance allows you to occasionally travel on unpaved roads, such as campgrounds, picnic sites, and similar locations. It is not designed for trail-blazing, mountain climbing, or other challenging off-road activities.

If you decide to drive on unpaved roads, you will find that it requires somewhat different driving skills. Your vehicle will also handle somewhat differently than it does on pavement. So be sure to read this owner's manual, pay special attention to the precautions and tips in this section, and get acquainted with your vehicle before you leave the pavement.

⚠ WARNING

Improperly operating this vehicle on or off pavement can cause a crash or rollover in which you and your passengers could be seriously injured or killed.

- Follow all instructions and guidelines in this owner's manual.
- Keep your speed low, and don't drive faster than conditions permit.

Important Safety Precautions

To avoid loss of control or rollover, be sure to follow all precautions and recommendations.

- Be sure to store cargo properly and do not exceed your cargo load limits (see page 305 and 330).
- Wherever you drive, make sure you and your passengers always wear seat belts.
- Keep your speed low, and never go faster than the conditions allow.
- It's up to you to continually assess the situation and drive within the limits.

Check Out Your Vehicle
Before you leave the pavement, be sure to do all scheduled maintenance and service, and inspect your vehicle for any problems. Pay special attention to the condition of the tires, and check the tire pressures.

After you return to the pavement, carefully inspect your vehicle to make sure there is no damage that could make driving it unsafe. Recheck the condition of the tires and the tire pressures.

Remember
The route presents limits (too steep or bumpy roads). You have limits (driving skill and comfort). And your vehicle has limits (traction, stability, and power).

Driving off-highway can be hazardous if you fail to recognize limits and take the proper precautions.

Accelerating and Braking
For better traction on all surfaces, accelerate slowly and gradually build up speed. If you try to start too fast on wet soil, mud, snow, or ice, you might not have enough traction to get underway, and you may dig yourself a hole. Starting with the shift lever in second (2) gear will help you have a smoother start on snow or ice.

Keep in mind that you will usually need more time and distance to brake to a stop on unpaved surfaces. Avoid hard braking. Do not “pump” the brakes; let the anti-lock braking system pump them for you.

Avoiding Obstacles
Debris in the road can damage your suspension or other components. Because your vehicle has a high center of gravity, driving over a large obstacle, or allowing a wheel to drop into a deep hole can cause your vehicle to tip or roll over.

Driving on Slopes
If you can’t clearly see all conditions or obstacles on a slope, walk the slope before you drive on it. If you have any doubt whether or not you can safely drive on the slope, don’t do it. Find another route.

If you are driving up a hill and find that you cannot continue, *do not try to turn around*. Your vehicle could roll over. Slowly back down the hill, following the same route you took up the hill.

Off-Highway Driving Guidelines

Crossing a Stream

Avoid driving through deep water. If you encounter water in your route (a small stream or large puddle, for example), evaluate it carefully before going ahead. Make sure it is shallow, flowing slowly, and has firm ground underneath. If you are not sure of the depth or the ground, turn around and find another route.

Driving through deep water can also damage your vehicle. The water can get into the transmission and differential, diluting the lubricant and causing an eventual failure. It can also wash the grease out of the wheel bearings.

If You Get Stuck

Avoid driving on soft sand, deep mud, or other surfaces where you could get stuck. If you do happen to get stuck because of inclement weather or other conditions, choose a safe and appropriate course of action.

You should never use a jack to try getting unstuck. A jack only works on firm, level ground. Also, your vehicle could easily slip off the jack and hurt you or someone else.

4-Wheel Drive Vehicles

If you spin the wheels excessively trying to get unstuck, you may overheat the components of the 4-wheel drive system. If this happens, the 4-wheel drive system shuts off and only the front wheels receive power. If this happens, stop and allow everything to cool down. The 4-wheel drive system will work again after its temperature drops.

If you slip the clutch for a long time while trying to get unstuck, you may overheat and damage it.

Maintenance

This section explains why it is important to keep your vehicle well maintained and how to follow basic maintenance safety precautions.

This section also includes instructions on how to read the Maintenance Minder messages on the information display, and instructions for simple maintenance tasks you may want to take care of yourself.

If you have the skills and tools to perform more complex maintenance tasks on your vehicle, you may want to purchase the service manual. See page 425 for information on how to obtain a copy, or see your dealer.

U.S. Vehicles:
Maintenance, replacement, or repair of emissions control devices and systems may be done by any automotive repair establishment or individual using parts that are "certified" to EPA standards.

Maintenance Safety 340
Maintenance Minder™ 341
Fluid Locations 348
Adding Engine Oil 349
Changing the Engine Oil and Filter 350
Engine Coolant 352
Windshield Washers 354
Automatic Transmission Fluid 355
Rear Differential Fluid 357
Brake Fluid 357
Power Steering Fluid 358
Lights 359
Cleaning the Seat Belts 365
Floor Mats 366
Audio Antenna 366
Dust and Pollen Filter 366
Wiper Blades 367
Tires 370
Wheels 376
Checking the Battery 376
Vehicle Storage 378
Interior Care 379

Maintenance Safety

All service items not detailed in this section should be performed by a certified technician or other qualified mechanic.

Important Safety Precautions
To eliminate potential hazards, read the instructions before you begin, and make sure you have the tools and skills required.

- Make sure your vehicle is parked on level ground, the parking brake is set, and the engine is off.
- To clean parts, use a commercially available degreaser or parts cleaner, not gasoline.
- To reduce the possibility of fire or explosion, keep cigarettes, sparks, and flames away from the battery and all fuel-related parts.
- Wear eye protection and protective clothing when working with the battery or compressed air.

⚠ WARNING

Improperly maintaining this vehicle, or failing to correct a problem before driving can cause a crash in which you can be seriously hurt or killed.

Always follow the inspection and maintenance recommendations and schedules in this owner's manual.

Potential Vehicle Hazards

- **Carbon Monoxide poison from engine exhaust.** Be sure there is adequate ventilation whenever you operate the engine.
- **Burns from hot parts.** Let the engine and exhaust system cool down before touching any parts.
- **Injury from moving parts.** Do not run the engine unless instructed to do so.

⚠ WARNING

Failure to properly follow maintenance instructions and precautions can cause you to be seriously hurt or killed.

Always follow the procedures and precautions in this owner's manual.

Some of the most important safety precautions are given here. However, we cannot warn you of every conceivable hazard that can arise in performing maintenance. Only you can decide whether or not you should perform a given task.

Your vehicle displays engine oil life and maintenance service items on the information display to show you when you should have your dealer do engine oil replacement and indicated maintenance service.

Based on the engine operating conditions, the onboard computer in your vehicle calculates the remaining engine oil life and displays it as a percentage.

Engine Oil Life Display

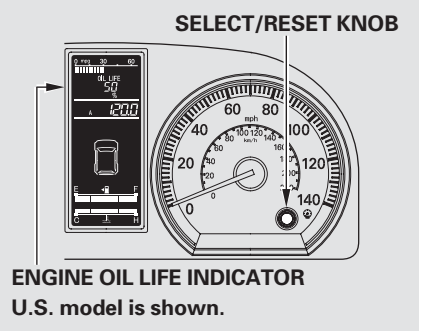

U.S. model is shown.

To see the current engine oil life, turn the ignition switch to the ON (II) position, then press and release the select/reset knob repeatedly until the engine oil life indicator appears (see page 69).

The remaining engine oil life is shown on the display according to this table:

Calculated Engine Oil Life (%)	Displayed Engine Oil Life (%)
100% – 91%	100%
90% – 81%	90%
80% – 71%	80%
70% – 61%	70%
60% – 51%	60%
50% – 41%	50%
40% – 31%	40%
30% – 21%	30%
20% – 16%	20%
15% – 11%	15%
10% – 6%	10%
5% – 1%	5%
0%	0%

CONTINUED

Maintenance Minder™

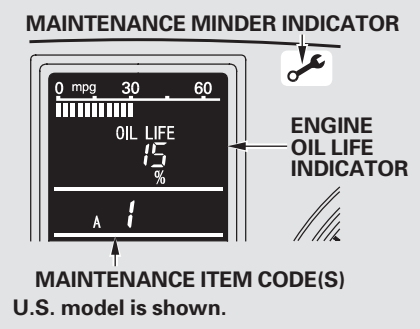

U.S. model is shown.

If the remaining engine oil life is 15 to 6 percent, you will see the engine oil life indicator every time you turn the ignition switch to the ON (II) position. The Maintenance Minder indicator will also come on, and the maintenance item code(s) for other scheduled maintenance items needing service will be displayed below the engine oil life indicator.

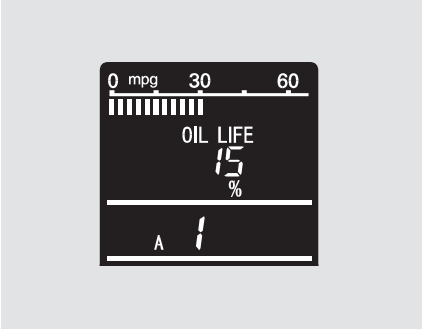

The 15 and 10 percent oil life indicators remind you that your vehicle will soon be due for scheduled maintenance.

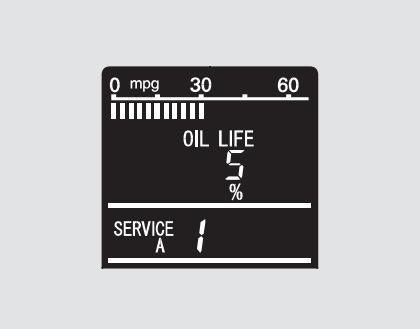

When the remaining engine oil life is 5 to 1 percent, you will see a “SERVICE” message along with the same maintenance item code(s), every time you turn the ignition switch to the ON (II) position.

The maintenance item code or codes indicate the main and sub items required at the time of the oil change (see page 347).

You can switch the information display from the engine oil life display to the odometer or the average fuel mileage, press and release the select/reset knob on the instrument panel.

When the engine oil life is 15 to 1 percent, the Maintenance Minder indicator ( ) comes on every time you turn the ignition switch to the ON (II) position, then it goes out if you switch the information display.

When you see this message, have the indicated maintenance performed by your dealer as soon as possible.

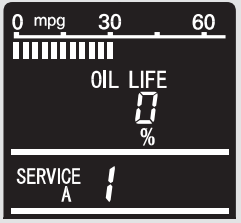

U.S. model is shown.

When the remaining engine oil life is 0 percent, the engine oil life indicator will blink. The display comes on every time you turn the ignition switch to the ON (II) position. The Maintenance Minder indicator ( ) also comes on and remains on in the instrument panel. When you see this message, immediately have the indicated maintenance done by your dealer.

NEGATIVE DISTANCE TRAVELED

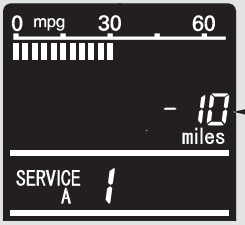

If you do not perform the indicated maintenance, negative distance traveled is displayed and begins to blink after the vehicle has been driven 10 miles (10 km) or more.

Negative distance traveled means your vehicle has passed the maintenance required point. Immediately have the indicated maintenance done by your dealer.

CONTINUED

Maintenance Minder™

To change the information display from the engine oil life display to the odometer or the average fuel mileage, press and release the select/reset knob.

When the engine oil life is 0 percent or negative distance traveled, the Maintenance Minder indicator ( ) remains on even if you change the information display.

Immediately have the service performed, and make sure to reset the display as described as follows.

Maintenance Main Items and Sub Items

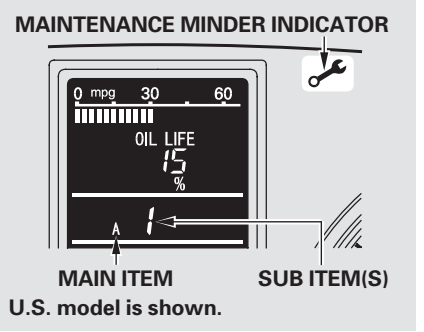

U.S. model is shown.

All maintenance items displayed on the information display are in code. For an explanation of these maintenance codes, see page 347 .

Resetting the Engine Oil Life Display

Your dealer will reset the display after completing the required maintenance service. You will see “OIL LIFE 100%” on the information display the next time you turn the ignition switch to the ON (II) position.

If maintenance service is done by someone other than your dealer, reset the Maintenance Minder as follows:

1. Turn the ignition switch to the ON (II) position.
2. Press the select/reset knob repeatedly until the engine oil life is displayed.

EX, EX-L model is shown.

3. Press the select/reset knob for about 10 seconds. The information display shows the reset mode initial display as shown.

4. Select the “OIL LIFE” indicator by turning the select/reset knob. The display begins to blink. Push the same knob to enter this setting.

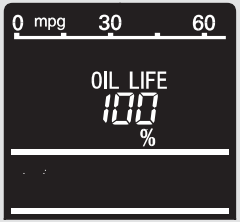

5. The engine oil life and the maintenance item code(s) will begin to blink. Press the select/reset knob for another 5 seconds.

6. The maintenance item code(s) will disappear, and the engine oil life will reset to “100.”

Important Maintenance Precautions

If you have the required service done but do not reset the display, or reset the display without doing the service, the system will not show the correct maintenance intervals. This can lead to serious mechanical problems because you will no longer have an accurate record of when maintenance is needed.

Your authorized Honda dealer knows your vehicle best and can provide competent, efficient service.

CONTINUED

Maintenance Minder™

However, service at a dealer is not mandatory to keep your warranties in effect. Maintenance may be done by any qualified service facility or person who is skilled in this type of automotive service. Make sure to have the service facility or person reset the display as previously described. Keep all receipts as proof of completion, and have the person who does the work fill out your Honda Service History or Canadian Maintenance Log. Check your warranty booklet for more information.

We recommend using Honda parts and fluids whenever you have maintenance done. These are manufactured to the same high quality standards as the original components, so you can be confident of their performance and durability.

U.S. Vehicles:
According to state and federal regulations, failure to perform maintenance on the items marked with # will not void your emissions warranties. However, all maintenance services should be performed in accordance with the intervals indicated by the information display.

Owner's Maintenance Checks
You should check the following items at the specified intervals. If you are unsure of how to perform any check, turn to the appropriate page listed.

- Engine oil level — Check every time you fill the fuel tank. See page 298.
- Engine coolant level — Check the radiator reserve tank every time you fill the fuel tank. See page 298.
- Automatic transmission — Check the fluid level monthly. See page 355.
- Brakes — Check the fluid level monthly. See page 357.
- Tires — Check the tire pressure monthly. Examine the tread for wear and foreign objects. See page 370.
- Lights — Check the operation of the headlights, parking lights, taillights, high-mount brake light, and license plate light monthly. See page 359.

Symbol	Maintenance Main Items
A	• Replace engine oil*1

B	• Replace engine oil*1 and oil filter
	• Inspect front and rear brakes
	• Check parking brake adjustment
	• Inspect these items:
	  • Tie rod ends, steering gear box, and boots
	  • Suspension components
	  • Driveshaft boots
	  • Brake hoses and lines (including ABS/VSA)
	  • All fluid levels and condition of fluids
	  • Exhaust system#
	  • Fuel lines and connections#

*1: If the message "SERVICE" does not appear more than 12 months after the display is reset, change the engine oil every year.

#: See information on maintenance and emissions warranty on page 346.

NOTE:
- Independent of the Maintenance Minder information, replace the brake fluid every 3 years.
- Inspect idle speed every 160,000 miles (256,000 km).
- Adjust the valves during services A, B, 1, 2, or 3 only if they are noisy.

Symbol	Maintenance Sub Items
1	• Rotate tires

2	• Replace air cleaner element
	  If you drive in dusty conditions, replace every 15,000 miles (24,000 km).
	• Replace dust and pollen filter
	  If you drive primarily in urban areas that have high concentrations of soot in the air from industry and from diesel-powered vehicles, replace every 15,000 miles (24,000 km).
	• Inspect drive belt

3	• Replace transmission fluid If you tow a CR-V behind a motorhome, the transmission fluid must be changed every 2 years or 30,000 miles (48,000 km), whichever comes first.
4	• Replace spark plugs • Inspect valve clearance
5	• Replace engine coolant
6	• Replace rear differential fluid*2

*2: 4WD

Fluid Locations

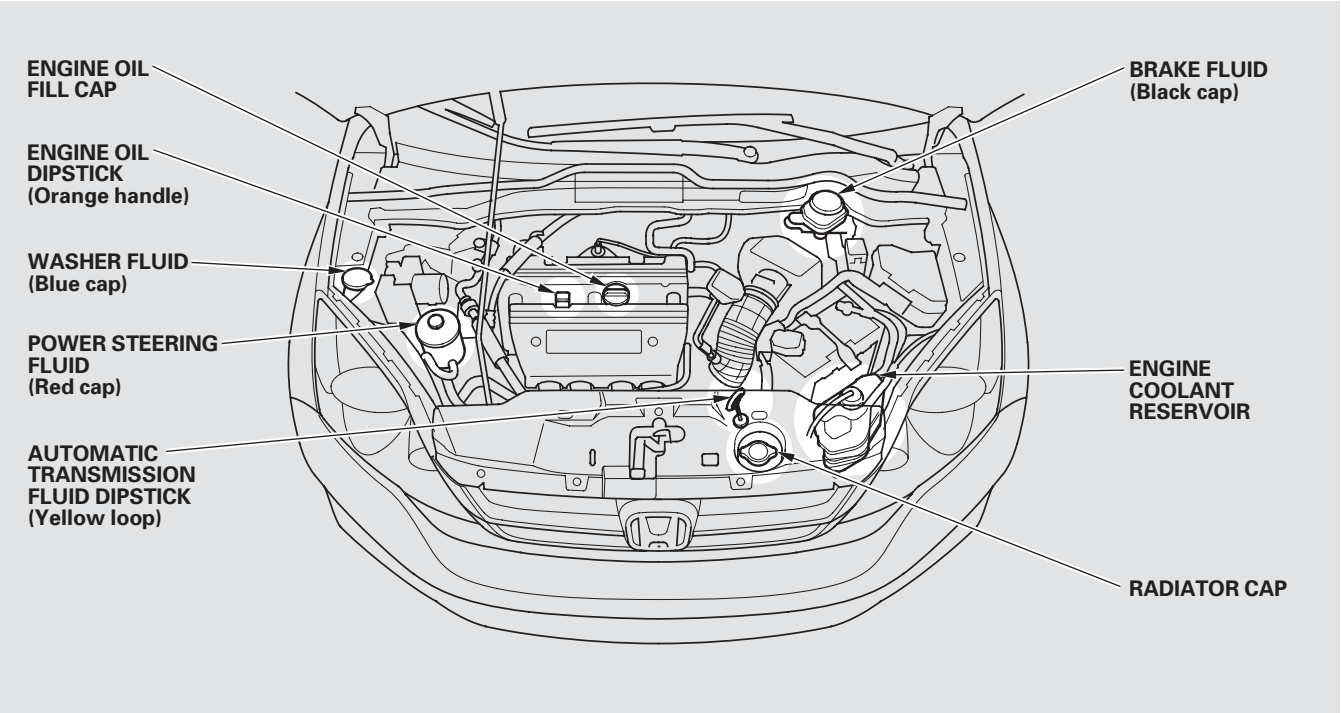

Adding Engine Oil

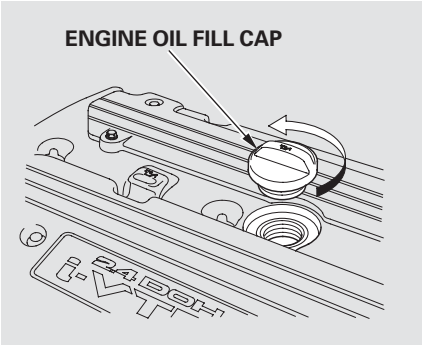

Unscrew and remove the engine oil fill cap on top of the valve cover. Pour in the oil slowly and carefully so you do not spill any. Clean up any spills immediately. Spilled oil could damage components in the engine compartment.

Reinstall the engine oil fill cap, and tighten it securely. Wait a few minutes, and recheck the oil level on the engine oil dipstick. Do not fill above the upper mark; you could damage the engine.

Recommended Engine Oil
Oil is a major contributor to your engine's performance and longevity. Always use a premium-grade 0W-20 detergent oil displaying the API Certification Seal. This seal indicates the oil is energy conserving, and that it meets the American Petroleum Institute's latest requirements.

API CERTIFICATION SEAL

Honda Motor Oil is the preferred 0W-20 lubricant for your vehicle. It is highly recommended that you use Honda Motor Oil in your vehicle for optimum engine protection. Make sure the API Certification Seal says "For Gasoline Engines".

The oil viscosity or weight is provided on the container's label. 0W-20 oil is formulated for year-round protection of your vehicle to improve cold weather starting and fuel economy.

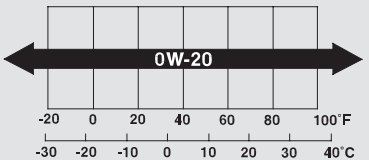

Ambient Temperature

Adding Engine Oil, Changing the Engine Oil and Filter

Synthetic Oil
You may use a synthetic motor oil if it meets the same requirements given for a conventional motor oil: it displays the API Certification Seal, and it is the proper weight. You must follow the oil and filter change intervals shown on the information display.

Engine Oil Additives
Your vehicle does not require any oil additives. Additives may adversely affect the engine or transmission performance and durability.

Changing the Engine Oil and Filter
Always change the oil and filter according to the maintenance messages shown on the information display. The oil and filter collect contaminants that can damage your engine if they are not removed regularly.

Changing the oil and filter requires special tools and access from underneath the vehicle. The vehicle should be raised on a service station-type hydraulic lift for this service. Unless you have the knowledge and proper equipment, you should have this maintenance done by a skilled mechanic.

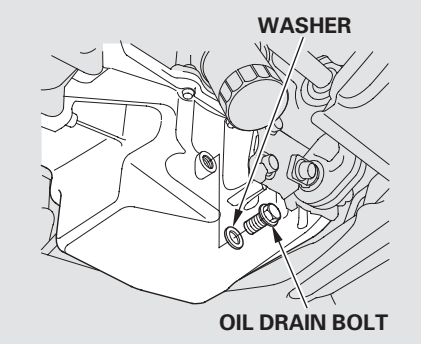

1. Run the engine until it reaches normal operating temperature, then shut it off.

2. Open the hood, and remove the engine oil fill cap. Remove the oil drain bolt and washer from the bottom of the engine. Drain the oil into an appropriate container.

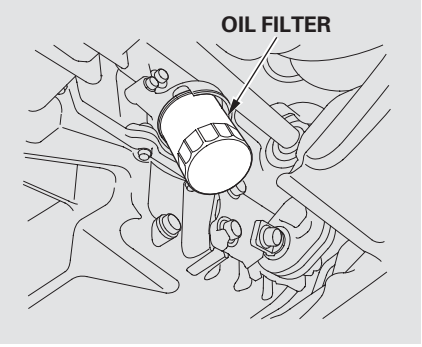

3. Remove the oil filter, and let the remaining oil drain. A special wrench (available from your dealer) is required.

   Make sure the oil filter gasket is not stuck to the contacting surface of the engine. If it is, remove it before installing a new oil filter.

4. Install a new oil filter according to the instructions that come with it. Make sure to clean off any dirt and dust on the contacting surface of a new oil filter.

5. Put a new washer on the drain bolt, then reinstall the drain bolt. Tighten the drain bolt to:
   29 lbf·ft (39 N·m , 4.0 kgf·m)

6. Refill the engine with the recommended oil.

   Engine oil change capacity (including filter):
   4.4 US qt (4.2 ℓ)

7. Replace the engine oil fill cap. Start the engine. The oil pressure indicator should go out within 5 seconds. If it does not, turn off the engine, and check your work.

8. Let the engine run for several minutes, then check the drain bolt and oil filter for leaks.

9. Turn off the engine and let it sit for several minutes, then check the oil level on the dipstick. If necessary, add more oil.

NOTICE

Improper disposal of engine oil can be harmful to the environment. If you change your own oil, please dispose of the used oil properly. Put it in a sealed container and take it to a recycling center. Do not discard it in a trash bin or dump it on the ground.

Engine Coolant

Adding Engine Coolant

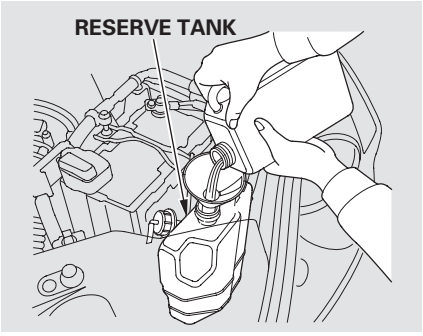

If the coolant level in the reserve tank is at or below the MIN line, add coolant to bring it up to the MAX line. Inspect the cooling system for leaks.

Always use Honda Long-life Antifreeze/Coolant Type 2. This coolant is pre-mixed with 50 percent antifreeze and 50 percent distilled water. Never add straight antifreeze or plain water.

If Honda antifreeze/coolant is not available, you may use another major-brand non-silicate coolant as a temporary replacement. Make sure it is a high-quality coolant recommended for aluminum engines. Continued use of any non-Honda coolant can result in corrosion, causing the cooling system to malfunction or fail. Have the cooling system flushed and refilled with Honda antifreeze/coolant as soon as possible.

If the reserve tank is completely empty, you should also check the coolant level in the radiator.

⚠ WARNING

Removing the radiator cap while the engine is hot can cause the coolant to spray out, seriously scalding you.

Always let the engine and radiator cool down before removing the radiator cap.

Engine Coolant

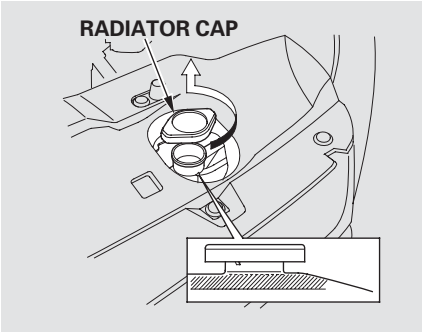

1. Make sure the engine and radiator are cool.

2. Relieve any pressure in the cooling system by turning the radiator cap counterclockwise, without pressing down.

3. Remove the radiator cap by pushing it down and turning it counterclockwise.

4. The coolant level should be up to the base of the filler neck. Add coolant if it is low.

   Pour the coolant slowly and carefully so you do not spill any. Clean up any spill immediately; it could damage components in the engine compartment.

5. Put the radiator cap back on, and tighten it fully.

6. Pour coolant into the reserve tank. Fill it halfway between the MAX and MIN marks. Put the cap back on the reserve tank.

Do not add any rust inhibitors or other additives to your vehicle's cooling system. They may not be compatible with the coolant or engine components.

Windshield Washers

Check the fluid level in the windshield washer reservoir at least monthly during normal use.

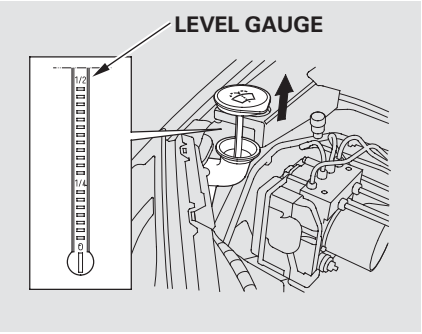

Check the fluid level by removing the cap and looking at the level gauge.

On Canadian models: The low washer level indicator comes on when the level is low (see page 67).

Fill the reservoir with a good-quality windshield washer fluid. This increases the cleaning capability and prevents freezing in cold weather.

When you refill the reservoir, clean the edges of the windshield wiper blades with windshield washer fluid on a clean cloth. This will help to condition the blade edges.

NOTICE

Do not use engine antifreeze or a vinegar/water solution in the windshield washer reservoir. Antifreeze can damage your vehicle's paint, while a vinegar/water solution can damage the windshield washer pump. Use only commercially-available windshield washer fluid.

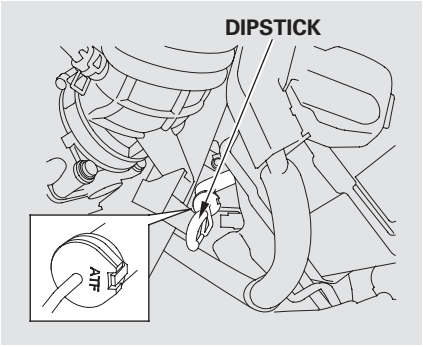

Check the fluid level with the engine at normal operating temperature.

1. Park the vehicle on level ground. Start the engine, let it run until the radiator fan comes on, then shut off the engine. For accurate results, wait about 60 seconds (but no longer than 90 seconds) before doing step 2.

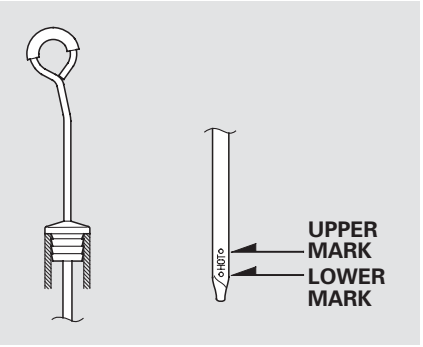

2. Remove the dipstick (yellow loop) from the transmission, and wipe it with a clean cloth.

3. Insert the dipstick all the way into the transmission securely as shown in the illustration.

4. Remove the dipstick and check the fluid level. It should be between the upper and lower marks.

5. If the level is below the lower mark, add fluid into the dipstick hole to bring it to the level between the upper and lower marks.

   Pour the fluid slowly and carefully so you do not spill any. Clean up any spill immediately; it could damage components in the engine compartment.

   Always use Honda ATF DW-1 (automatic transmission fluid).

CONTINUED

Automatic Transmission Fluid

NOTICE

Use only Honda ATF DW-1 (automatic transmission fluid). Do not mix with other transmission fluids.
Using transmission fluid other than Honda ATF DW-1 may cause deterioration in transmission operation and durability, and could result in damage to the transmission.
Damage resulting from the use of transmission fluid other than Honda ATF DW-1 is not covered by the Honda new vehicle warranty.

6. Insert the dipstick all the way back into the transmission securely as shown in the illustration.

   Make sure the rubber cap on the dipstick fits in the dipstick guide and that you push the dipstick in all the way.

If you are not sure how to add fluid, contact your dealer.

The transmission should be drained and refilled with new fluid according to the Maintenance Minder™ (see page 347).

Rear Differential Fluid

4WD model only

The rear differential should be drained and refilled with new fluid according to the Maintenance Minder information. Have your dealer replace the rear differential fluid.

Use Honda Dual Pump Fluid II only. Do not use automatic transmission fluid (ATF).

Brake Fluid

Check the fluid level in the brake fluid reservoir monthly.

Independent of the Maintenance Minder information, replace the brake fluid every 3 years.

Always use Honda Heavy Duty Brake Fluid DOT 3. If it is not available, you should use only DOT 3 or DOT 4 fluid, from a sealed container, as a temporary replacement.

Using any non-Honda brake fluid can cause corrosion and decrease the life of the system. Have the brake system flushed and refilled with Honda Heavy Duty Brake Fluid DOT 3 as soon as possible.

Brake fluid marked DOT 5 is not compatible with your vehicle's braking system and can cause extensive damage.

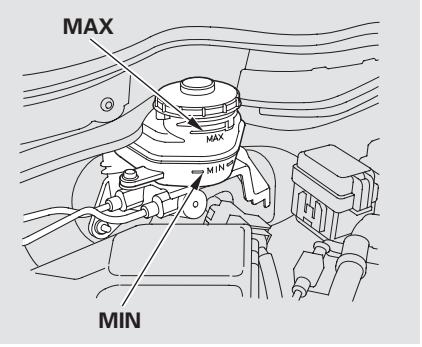

The fluid level should be between the MIN and MAX marks on the side of the reservoir. If the level is at or below the MIN mark, your brake system needs attention. Have the brake system inspected for leaks or worn brake pads.

Power Steering Fluid

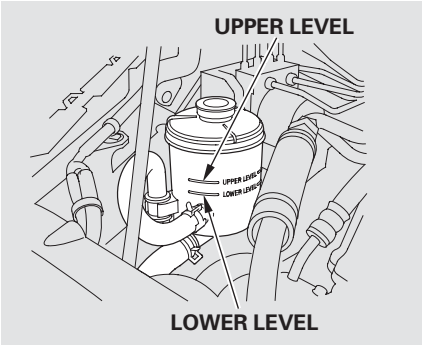

Check the level on the side of the reservoir when the engine is cold. The fluid should be between the UPPER LEVEL and LOWER LEVEL. If not, add power steering fluid to the UPPER LEVEL.

Pour the fluid slowly and carefully so you do not spill any. Clean up any spills immediately; it could damage components in the engine compartment.

Always use Honda Power Steering Fluid. You may use another power steering fluid as an emergency replacement, but have the power steering system flushed and refilled with Honda PSF as soon as possible.

A low power steering fluid level can indicate a leak in the system. Check the fluid level frequently, and have the system inspected as soon as possible.

NOTICE

Turning the steering wheel to full left or right lock and holding it there can damage the power steering pump.

Headlight Aiming

The headlights were properly aimed when your vehicle was new. If you regularly carry heavy items in the cargo area or pull a trailer, readjustment may be required. Adjustments should be done by your dealer or another qualified technician.

Replacing a Headlight Bulb

Your vehicle has halogen headlight bulbs. When replacing a bulb, handle it by its base, and protect the glass from contact with your skin or hard objects. If you touch the glass, clean it with denatured alcohol and a clean cloth.

NOTICE

Halogen headlight bulbs get very hot when lit. Oil, perspiration, or a scratch on the glass can cause the bulb to overheat and shatter.

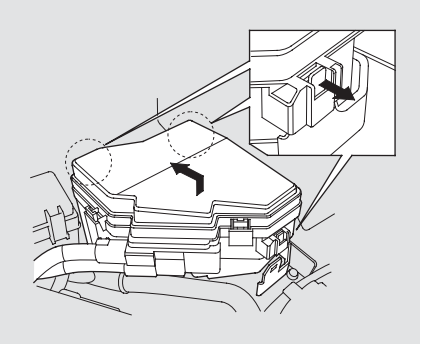

1. Open the hood.

   To change the headlight bulb on the driver's side, remove the under-hood fuse box from its stay by pulling it out.

CONTINUED

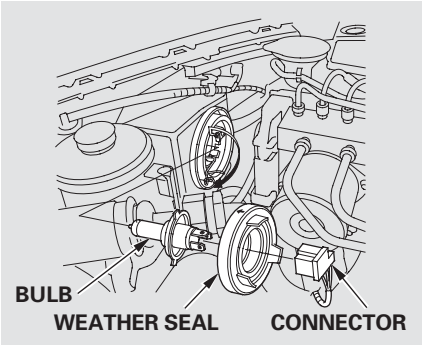

2. Remove the electrical connector from the bulb by pulling the connector straight back.

3. Remove the rubber weather seal by pulling on the tab.

4. Unclip the end of the hold-down wire from its slot. Pivot it out of the way, and remove the bulb.

5. Install the new bulb into the hole, making sure the tabs are in their slots. Pivot the hold-down wire back in place, and clip the end into the slot.

6. Install the rubber seal over the back of the headlight assembly. Make sure one of the three arrows on the rubber seal is facing up; it is marked "→."

7. Push the electrical connector onto the new bulb. Make sure it is connected securely. Turn on the headlights to test the new bulb.

8. (Driver's side)
   Reinstall the under-hood fuse box.

Replacing a Front Turn Signal Light Bulb

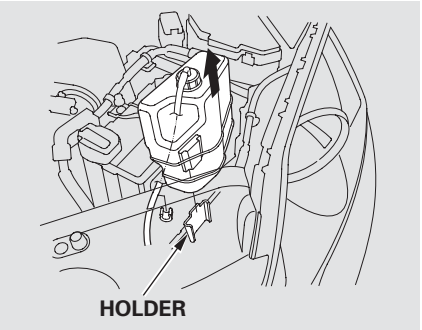

1. Open the hood.

   To change the turn signal bulb on the driver's side, remove the engine coolant reserve tank by pulling it out of its holder.

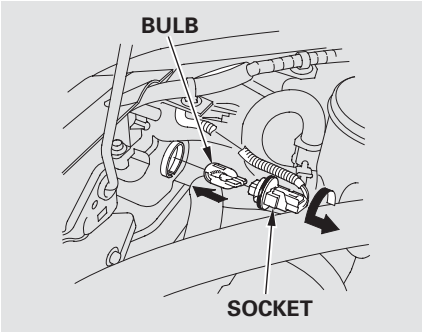

2. Remove the socket from the headlight assembly by turning it one-quarter turn counterclockwise.

3. Pull the bulb straight out of its socket. Push the new bulb straight into the socket until it bottoms.

4. Insert the socket back into the headlight assembly. Turn it clockwise to lock it in place.

5. Turn on the lights to make sure the new bulb is working.

6. (Driver's side)
   Reinstall the coolant reserve tank.

Replacing a Parking Light/Front Side Marker Light Bulb

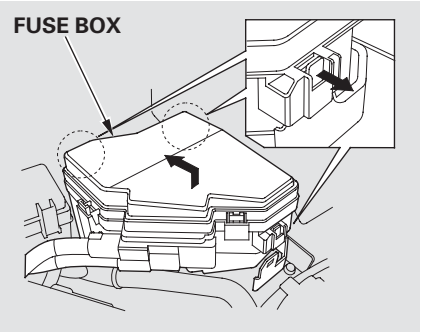

1. Open the hood.

   To change the parking light/front side marker on the driver's side, remove the fuse box from its stay by pulling out.

CONTINUED

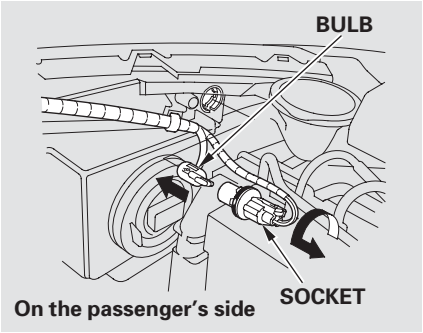

2. Remove the socket from the headlight assembly by turning it one-quarter turn counterclockwise.

3. Pull the bulb straight out of its socket. Push the new bulb straight into the socket until it bottoms.

4. Insert the socket back into the headlight assembly. Turn it clockwise to lock it in place.

5. Turn on the lights to make sure the new bulb is working.

6. (Driver's side)
   Reinstall the fuse box in place securely.

Replacing Rear Bulbs

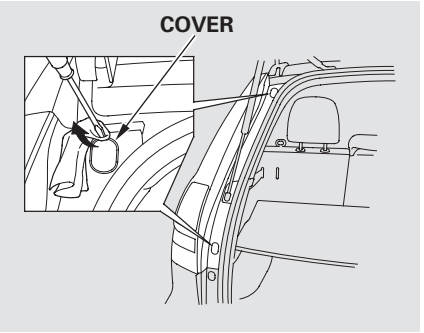

1. Open the tailgate. Place a cloth on the edge of the cover to prevent scratches. Remove the covers by carefully prying on the edge with a small flat-tip screwdriver.

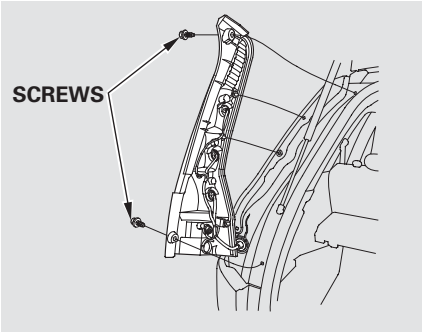

2. Use a Phillips-head screwdriver to remove the taillight assembly mounting screw under each cover.

3. Pull the taillight assembly out of the rear pillar.

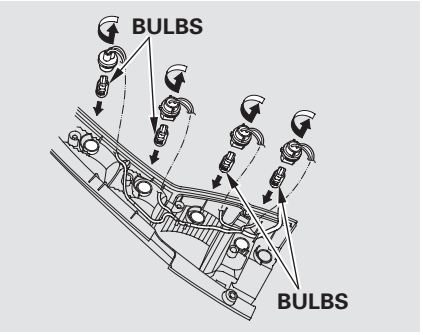

4. Determine which of the four bulbs is burned out: stop/taillight, back-up light, turn signal, or side marker.

5. Remove the socket by turning it one-quarter turn counterclockwise.

6. Pull the bulb straight out of its socket. Push the new bulb straight into the socket until it bottoms.

7. Reinstall the socket into the light assembly by turning it clockwise until it locks.

8. Turn on the lights to make sure the new bulb is working.

9. Align the clips on the taillight assembly with the holes in the body, then push the taillight assembly into place. Tighten the two mounting screws securely and reinstall the covers.

Replacing a High-mount Brake Light Bulb

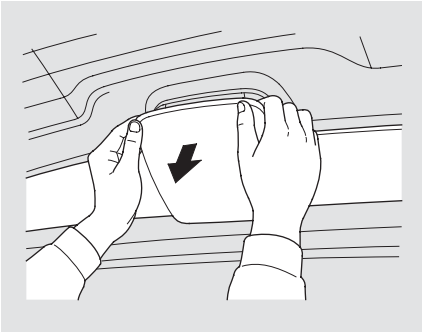

1. Open the tailgate.
   Unlatch the top of the cover by pulling back on it with your hands.

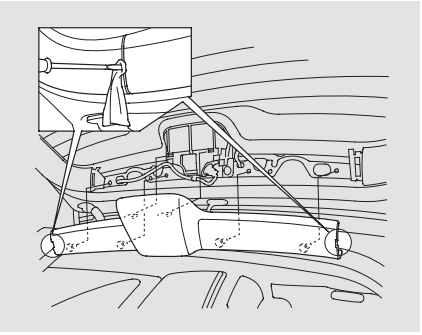

2. Place a cloth on the side edge of the cover to prevent scratches. Remove the cover by carefully prying on the edge with a small flat-tip screwdriver and pulling the cover off.

3. Remove the socket from the light assembly by turning it one-quarter turn counterclockwise.

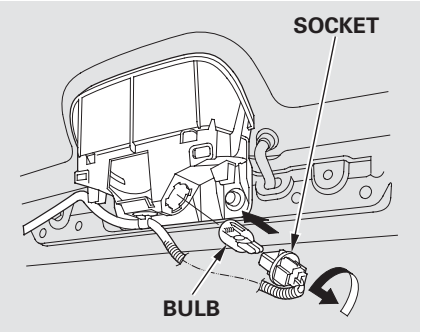

4. Pull the bulb straight out of its socket. Push the new bulb straight into the socket until it bottoms.

5. Press the brake pedal to make sure the new bulb is working.

6. Put the socket back into the light assembly, and turn it clockwise to lock it in place.

7. Put the cover back on the light assembly. Push it in until it locks in place.

Replacing a Rear License Plate Light Bulb

This light should be replaced by your dealer.

Cleaning the Seat Belts

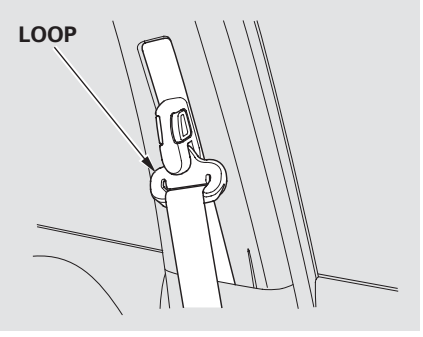

If your seat belts get dirty, use a soft brush with a mixture of mild soap and warm water to clean them. Do not use bleach, dye, or cleaning solvents. Let the belts air-dry before you use the vehicle.

Dirt build-up in the loops of the seat belt anchors can cause the belts to retract slowly. Wipe the insides of the loops with a clean cloth dampened in mild soap and warm water or isopropyl alcohol.

Floor Mats, Audio Antenna, Dust and Pollen Filter

Floor Mats

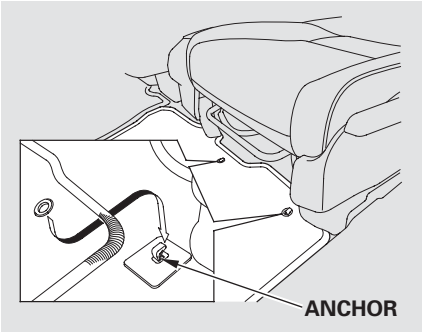

The floor mats that came with your vehicle hook over the floor mat anchors. This keeps the floor mats from sliding forward, possibly interfering with the pedals, or backwards, making the front passenger's weight sensors ineffective.

If you remove a floor mat, make sure to re-anchor it when you put it back in your vehicle.

If you use a non-Honda floor mat, make sure it fits properly and that it can be used with the floor mat anchors. Do not put additional floor mats on top of the anchored mats.

Audio Antenna

NOTICE

Your vehicle is equipped with an antenna at the rear of the roof. Before using a ''drive-through'' car wash, remove the antenna by unscrewing it by hand. This prevents the antenna from being damaged by the car wash brushes.

Dust and Pollen Filter

This filter removes the dust and pollen that is brought in from the outside through the heating and cooling system/climate control system.

Have your dealer replace this filter when this service is indicated by a maintenance message on the information display. It should be replaced every 15,000 miles (24,000 km) if you drive primarily in urban areas that have high concentrations of soot in the air, or if the airflow from the heating and cooling system/climate control system becomes less than usual.

Wiper Blades

Check the condition of the wiper blades at least every six months. Replace them if you find signs of cracking in the rubber, areas that are getting hard, or if they leave streaks and unwiped areas when used.

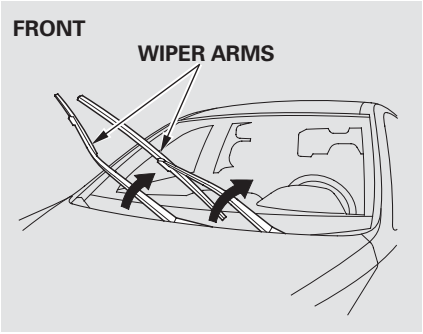

To replace a front wiper blade:

1. Raise each wiper arm off the windshield, lifting the driver's side first, then the passenger's side.

NOTICE

Do not open the hood when the wiper arms are raised, or you will damage the hood and the wiper arms.

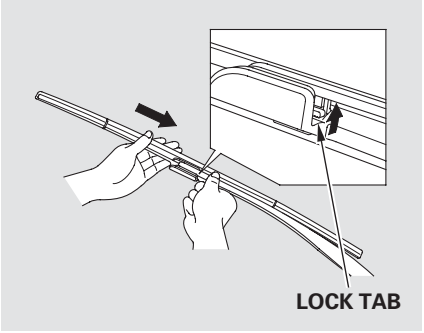

2. Disconnect the blade assembly from the wiper arm:

- Press and hold the lock tab.
- Slide the blade assembly toward the lock tab until it releases from the wiper arm.

When replacing a wiper blade, make sure not to drop the wiper blade or wiper arm down on the windshield.

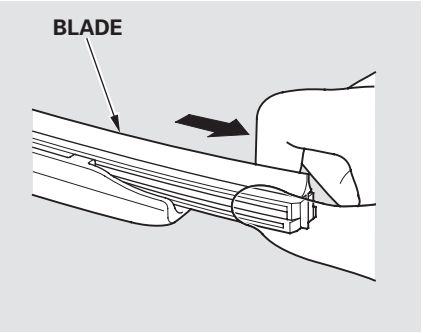

3. Remove the blade from its holder by grasping the tabbed end of the blade. Pull firmly until the tabs come out of the holder.

CONTINUED

Wiper Blades

4. Examine the new wiper blades. If they have no plastic or metal reinforcement along the back edge, remove the metal reinforcement strips from the old wiper blade, and install them in the slots along the edge of the new blade.

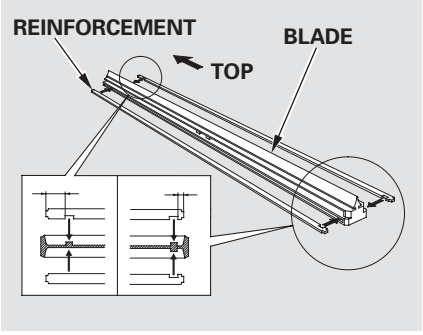

Make sure the three rubber tabs inside the blade fit to each notch of the reinforcement, as shown.

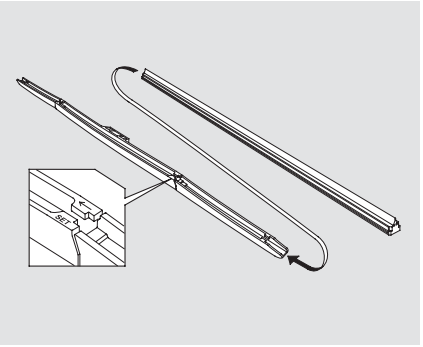

5. Place the top of the wiper blade on the end of the blade assembly, and slide the blade onto the assembly in the direction pointed to by the arrow.
   Make sure the blade is completely installed.

6. Slide the wiper blade assembly onto the wiper arm. Make sure it locks in place.

7. Lower the wiper arm down against the windshield, the passenger's side first, then the driver's side.

Wiper Blades

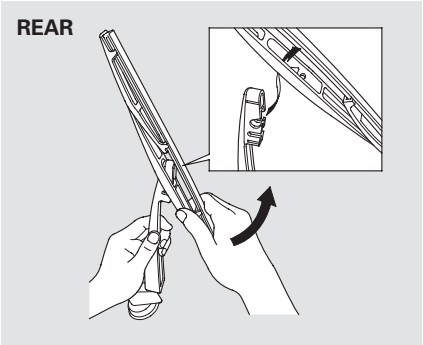

To replace a rear wiper blade:

1. Raise the wiper arm off the rear window.

2. Disconnect the blade assembly from the wiper arm by pivoting the blade assembly upward.

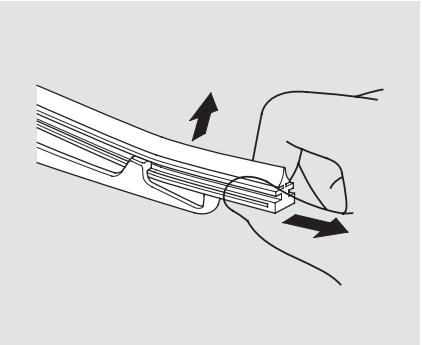

3. Pull one end of the blade out from the holder.
   Slide the blade out of the holder.

4. Examine the new wiper blades. If they have no plastic or metal reinforcement along the back edge, remove the metal reinforcement strips from the old wiper blade, and install them in the slots along the edge of the new blade.

5. Slide the new blade into the holder. Make sure it is engaged in the slot along its full length.
   Insert both ends of the blade into the holder. Make sure they are secure.

6. Install the wiper blade assembly onto the wiper arm. Make sure it locks in place.

7. Lower the wiper arm against the windshield.

Tires

To safely operate your vehicle, your tires must be the proper type and size, in good condition with adequate tread, and correctly inflated.

The following pages give more detailed information on how to take care of your tires and what to do when they need to be replaced.

⚠ WARNING

Using tires that are excessively worn or improperly inflated can cause a crash in which you can be seriously hurt or killed.

Follow all instructions in this owner's manual regarding tire inflation and maintenance.

Inflation Guidelines

Keeping the tires properly inflated provides the best combination of handling, tread life, and riding comfort.

- Underinflated tires wear unevenly, adversely affect handling and fuel economy, and are more likely to fail from being overheated.
- Overinflated tires can make your vehicle ride more harshly, are more prone to damage from road hazards, and wear unevenly.

The tire pressure monitoring system (TPMS) warns you when a tire pressure is low. See page 326 for more information.

Even though your vehicle is equipped with TPMS, we recommend that you visually check your tires every day. If you think a tire might be low, check it immediately with a tire gauge.

Use a gauge to measure the air pressure in each tire at least once a month. Even tires that are in good condition may lose 1 to 2 psi (10 to 20 kPa, 0.1 to 0.2 kgf/cm²) per month. Remember to check the spare tire at the same time.

Check the air pressures when the tires are cold. This means the vehicle has been parked for at least 3 hours, or driven less than 1 mile (1.6 km). Add or release air, if needed, to match the recommended cold tire pressures on this page.

If you check air pressures when the tires are hot (driven for several miles/kilometers), you will see readings 4 to 6 psi (30 to 40 kPa, 0.3 to 0.4 kgf/cm²) higher than the cold readings. This is normal. Do not let air out to match the recommended cold air pressure. The tire will be underinflated.

You should get your own tire pressure gauge and use it whenever you check your tire pressures. This will make it easier for you to tell if a pressure loss is due to a tire problem and not due to a variation between gauges.

While tubeless tires have some ability to self-seal if they are punctured, you should look closely for punctures if a tire starts losing pressure.

Recommended Tire Pressures
The following chart shows the recommended cold tire pressures for most normal and high-speed driving conditions.

Tire Size	Cold Tire Pressure for Normal Driving
225/65R17 102T	Front/Rear: 30 psi (210 kPa , 2.1 kgf/cm²)

The compact spare tire pressure is: 60 psi (420 kPa , 4.2 kgf/cm²)

For convenience, the recommended tire sizes and cold tire pressures are on a label on the driver's doorjamb.

For additional information about your tires, see page 410 .

Tire Inspection

Every time you check inflation, you should also examine the tires for damage, foreign objects, and wear.

You should look for:

- Bumps or bulges in the tread or side of the tire. Replace the tire if you find either of these conditions.
- Cuts, splits, or cracks in the side of the tire. Replace the tire if you can see fabric or cord.
- Excessive tread wear.

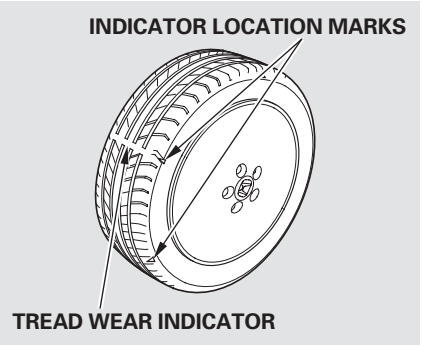

Your tires have wear indicators molded into the tread. When the tread wears down, you will see a 1/2 inch (12.7 mm) wide band across the tread. This shows there is less than 1/16 inch (1.6 mm) of tread left on the tire.

A tire this worn gives very little traction on wet roads. You should replace the tire if you can see three or more tread wear indicators.

Tire Service Life

The service life of your tires is dependent on many factors, including, but not limited to, driving habits, road conditions, vehicle loading, inflation pressure, maintenance history, speed, and environmental conditions (even when the tires are not in use).

In addition to your regular inspections and inflation pressure maintenance, it is recommended that you have annual inspections performed once the tires reach five years old. It is also recommended that all tires, including the spare, be removed from service after 10 years from the date of manufacture, regardless of their condition or state of wear.

The last four digits of the TIN (tire identification number) are found on the sidewall of the tire and indicate the date of manufacture (See **Tire Labeling** on page 412).

Tire Maintenance

In addition to proper inflation, correct wheel alignment helps to decrease tire wear. If you find a tire is worn unevenly, have your dealer check the wheel alignment.

Have your dealer check the tires if you feel a consistent vibration while driving. A tire should always be rebalanced if it is removed from the wheel. When you have new tires installed, make sure they are balanced. This increases riding comfort and tire life. For best results, have the installer perform a dynamic balance.

NOTICE

On vehicles with aluminum wheels, improper wheel weights can damage your vehicle's aluminum wheels. Use only Honda wheel weights for balancing.

Tire Rotation

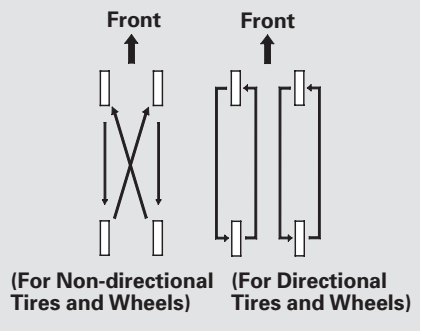

To help increase tire life and distribute wear more evenly, rotate the tires according to the maintenance messages displayed on the information display. Move the tires to the positions shown in the diagram each time they are rotated. If you purchase directional tires, rotate only front-to-back.
When the tires are rotated, make sure the air pressures are checked.

Replacing Tires and Wheels
Replace your tires with radial tires of the same size, load range, speed rating, and maximum cold tire pressure rating (as shown on the tire's sidewall).

Mixing radial and bias-ply tires on your vehicle can reduce braking ability, traction, and steering accuracy. Using tires of a different size or construction can cause the ABS and vehicle stability assist system (VSA) to work inconsistently.

The ABS and VSA system work by comparing the speed of each wheel. When replacing tires, use the same size originally supplied with the vehicle. Tire size and construction can affect wheel speed and may cause the system to activate.

It is best to replace all four tires at the same time. If that is not possible or necessary, replace the two front tires or two rear tires as a pair. Replacing just one tire can seriously affect your vehicle's handling.

If you ever replace a wheel, make sure that the wheel's specifications match those of the original wheels.

Also be sure you use only TPMS specific wheels. If you do not, the tire pressure monitoring system will not work on that tire.

Replacement wheels are available at your dealer.

⚠ WARNING

Installing improper tires on your vehicle can affect handling and stability. This can cause a crash in which you can be seriously hurt or killed.

Always use the size and type of tires recommended in this owner's manual.

Wheel and Tire Specifications

Wheels:
17 x 6 1/2J

Tires:
225/65R17 102T

See page 410 for DOT tire quality grading information, and page 412 for tire size and labeling information.

Winter Driving

Tires marked “M + S” or “All Season” on the sidewall have an all-weather tread design suitable for most winter driving conditions.

For the best performance in snowy or icy conditions, you should install snow tires or tire chains. They may be required by local laws under certain conditions.

Snow Tires

If you mount snow tires on your vehicle, make sure they are radial tires of the same size and load range as original tires. Mount snow tires on all four wheels. The traction provided by snow tires on dry roads may be lower than your original tires. Check with the tire dealer for maximum speed recommendations.

Tire Chains

Mount tire chains on your tires when required by driving conditions or local laws. Install them only on the front tires.

Because your vehicle has limited tire clearance, Honda strongly recommends using the chains listed below, made by Security Chain Company (SCC).

Cable-type: SCC Radial Chain TC2111MM

⚠ WARNING

Using the wrong chains, or not properly installing chains, can damage the brake lines and cause a crash in which you can be seriously injured or killed.

Follow all instructions in this owner’s manual regarding the selection and use of tire chains.

CONTINUED

Tires, Wheels, Checking the Battery

When installing cables, follow the manufacturer's instructions, and mount them as tight as you can. Make sure they are not contacting the brake lines or suspension. Drive slowly with them installed. If you hear them coming into contact with the body or chassis, stop and investigate. Remove them as soon as you begin driving on cleared roads.

NOTICE

Traction devices that are the wrong size or improperly installed can damage your vehicle's brake lines, suspension, body, and wheels. Stop driving if they are hitting any part of the vehicle.

Wheels

Clean the wheels as you would the rest of the exterior. Wash them with the same solution, and rinse them thoroughly.

If equipped

Aluminum alloy wheels have a protective clear-coat that keeps the aluminum from corroding and tarnishing. Cleaning the wheels with harsh chemicals (including some commercial wheel cleaners) or a stiff brush can damage the clear-coat. To clean the wheels, use a mild detergent and a soft brush or sponge.

Checking the Battery

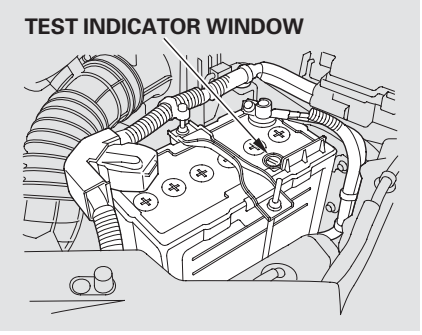

Check the condition of the battery monthly by looking at the test indicator window. The label on the battery explains the test indicator's colors.

The location of the test indicator window varies between manufacturers.

Checking the Battery

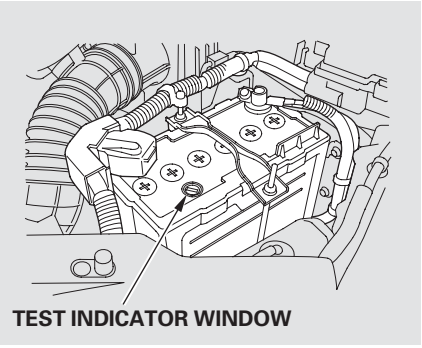

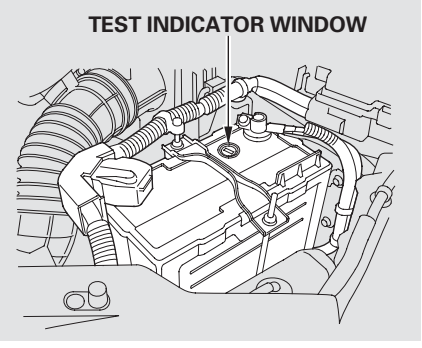

Check the terminals for corrosion (a white or yellowish powder). To remove it, cover the terminals with a solution of baking soda and water. It will bubble up and turn brown. When this stops, wash it off with plain water. Dry off the battery with a cloth or paper towel. Coat the terminals with grease to help prevent future corrosion.

If additional battery maintenance is needed, see your dealer or a qualified technician.

WARNING: Battery posts, terminals, and related accessories contain lead and lead compounds. **Wash your hands after handling.**

If you need to connect the battery to a charger, disconnect both cables to prevent damaging your vehicle's electrical system. Always disconnect the negative (−) cable first, and reconnect it last.

⚠ WARNING

The battery gives off explosive hydrogen gas during normal operation.

A spark or flame can cause the battery to explode with enough force to kill or seriously hurt you.

Wear protective clothing and a face shield, or have a skilled technician do the battery maintenance.

CONTINUED

Checking the Battery, Vehicle Storage

On vehicles without navigation system
If your vehicle's battery is disconnected, or goes dead, the time setting may be lost. To reset the time, see page 259 .

If your vehicle's battery is disconnected, or goes dead, the audio system will disable itself. The next time you turn on the radio, you may see "ENTER CODE" in the frequency display. Use the preset buttons to enter the code (see page 258).

On vehicles with navigation system
The navigation system will also disable itself. The next time you turn on the ignition switch, the system will require you to enter a PIN before it can be used. Refer to the navigation system manual.

Vehicle Storage
If you need to park your vehicle for an extended period (more than 1 month), there are several things you should do to prepare it for storage. Proper preparation helps prevent deterioration and makes it easier to get your vehicle back on the road. If possible, store your vehicle indoors.

- Fill the fuel tank.
- Wash and dry the exterior completely.
- Clean the interior. Make sure the carpeting, floor mats, etc., are completely dry.
- Leave the parking brake off. Put the transmission in Park.
- Block the rear wheels.
- If the vehicle is to be stored for a longer period, it should be supported on jackstands so the tires are off the ground.
- Leave one window open slightly (if the vehicle is being stored indoors).
- Disconnect the battery.

- Support the front and rear wiper blade arms with a folded towel or rag so they do not touch the windshield.

- To minimize sticking, apply a silicone spray lubricant to all door and tailgate seals. Also, apply a vehicle body wax to the painted surfaces that mate with the door and tailgate seals.

- Cover the vehicle with a "breathable" cover, one made from a porous material such as cotton. Non-porous materials, such as plastic sheeting, trap moisture, which can damage the paint.

- If possible, periodically run the engine until it reaches full operating temperature (the cooling fans cycle on and off twice). Preferably, do this once a month.

Leather
If equipped
Vacuum dirt and dust from the leather frequently. Pay close attention to the pleats and seams. Clean the leather with a soft cloth dampened with a 90% water and 10% neutral wool detergent solution. Then buff it with a clean, dry cloth. Remove any dust or dirt on leather surfaces immediately.

Taking Care of the Unexpected

This section covers the more common problems that motorists experience with their vehicles. It gives you information about how to safely evaluate the problem and what to do to correct it. If the problem has stranded you on the side of the road, you may be able to get going again. If not, you will also find instructions on getting your vehicle towed.

Compact Spare Tire..... 382
Changing a Flat Tire 383
If the Engine Won't Start..... 388
Jump Starting 390
If the Engine Overheats 392
Low Oil Pressure Indicator 394
Charging System Indicator..... 394
Malfunction Indicator Lamp 395
Brake System Indicator 396
Fuses 397
Fuse Locations 401
Emergency Towing 403

Compact Spare Tire

Use the compact spare tire as a temporary replacement only. Get your regular tire repaired or replaced, and put it back on your vehicle as soon as you can.

Check the air pressure of the compact spare tire every time you check the other tires. It should be inflated to:
60 psi (420 kPa , 4.2 kgf/cm²)

Follow these precautions:

- Never exceed 50 mph (80 km/h).
- This tire gives a harsher ride and less traction on some road surfaces. Use greater caution while driving.
- Do not mount snow chains on the compact spare tire.
- Do not use your compact spare tire on another vehicle unless it is the same make and model.
- The low tire pressure indicator comes on and stays on after you replace the flat tire with the compact spare tire. After several miles (kilometers) driving with the compact spare tire, the TPMS indicator comes on and the low tire pressure indicator goes off.

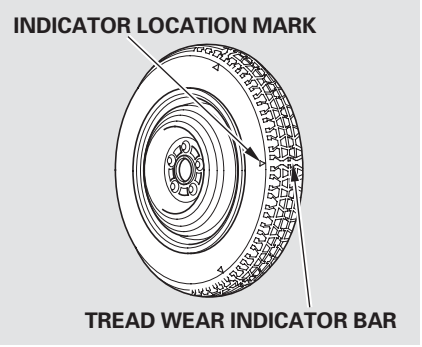

Replace the tire when you can see the tread wear indicator bars. The replacement tire should be the same size and design, mounted on the same wheel. The spare tire is not designed to be mounted on a regular wheel, and the spare wheel is not designed for mounting a regular tire.

Changing a Flat Tire

If you have a flat tire while driving, stop in a safe place to change it. Drive slowly along the shoulder until you get to an exit or an area to stop that is far away from the traffic lanes.

⚠ WARNING

The vehicle can easily roll off the jack, seriously injuring anyone underneath.

Follow the directions for changing a tire exactly, and never get under the vehicle when it is supported only by the jack.

1. Park the vehicle on firm, level, and non-slippery ground. Put the transmission in Park. Apply the parking brake.
   If you are towing a trailer, unhitch the trailer.

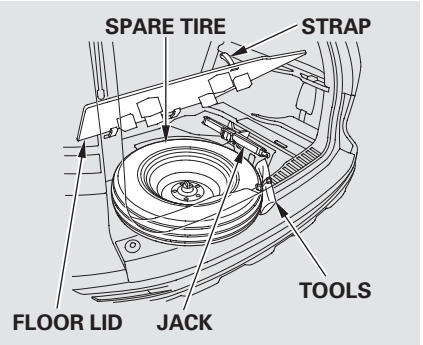

2. Turn on the hazard warning lights, and turn the ignition switch to the LOCK (0) position. Have all passengers get out of the vehicle while you change the tire.

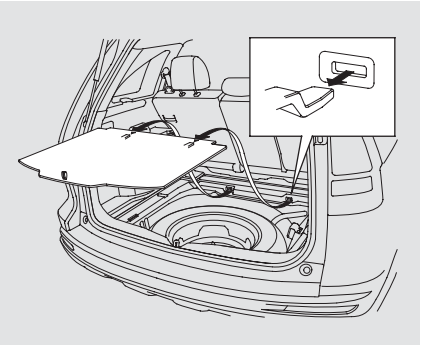

3. Open the tailgate. Raise the cargo area floor lid by lifting up with the strap, and remove it from cargo area by disengaging the tabs.

   When you store the flat tire in the spare tire well, do not reinstall the cargo area floor lid forcibly. This will damage the tabs on the lid.

4. Take the tool kit out of the spare tire.

CONTINUED

Changing a Flat Tire

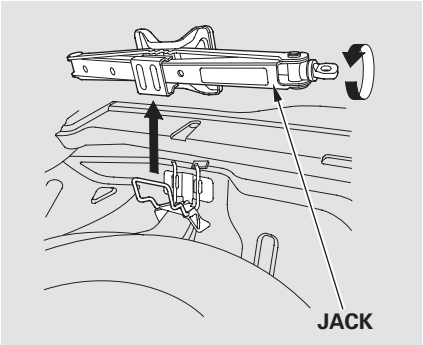

5. Take the jack out of the spare tire area.

   Turn the jack's end bracket counterclockwise to loosen it, then remove the jack by lifting it straight up.

6. Unscrew the wing bolt and take the spare tire out of its well.

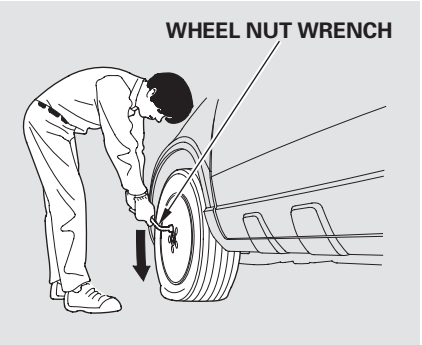

7. Loosen each wheel nut 1/2 turn with the wheel nut wrench.

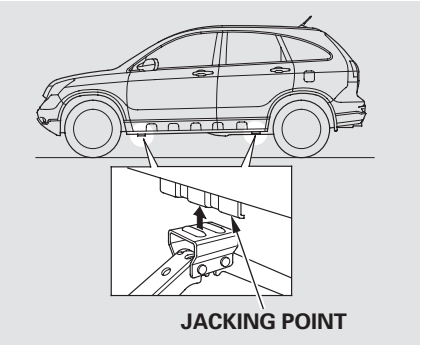

8. Place the jack under the jacking point nearest the tire you need to change. Turn the end bracket clockwise until the top of the jack contacts the jacking point. Make sure the jacking point tab is resting in the jack notch.

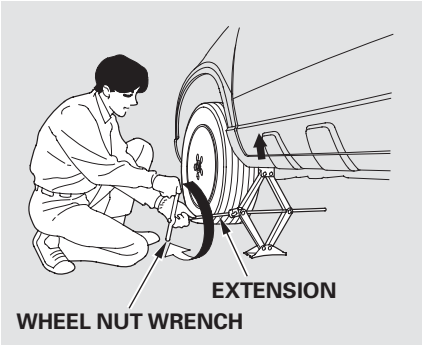

9. Use the extension and the wheel nut wrench as shown to raise the vehicle until the flat tire is off the ground.

10. Remove the wheel nuts, then remove the flat tire. Handle the wheel nuts carefully; they may be hot from driving. Place the flat tire on the ground with the outside surface facing up.

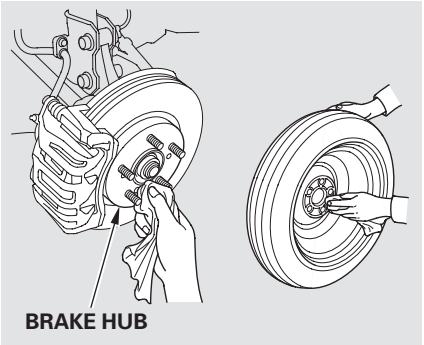

11. Before mounting the spare tire, wipe any dirt off the mounting surface of the wheel and hub with a clean cloth. Wipe the hub carefully; it may be hot from driving.

12. Put on the spare tire. Put the wheel nuts back on finger-tight, then tighten them in a crisscross pattern with the wheel nut wrench until the wheel is firmly against the hub. Do not try to tighten the wheel nuts fully.

13. Lower the vehicle to the ground, and remove the jack.

CONTINUED

Changing a Flat Tire

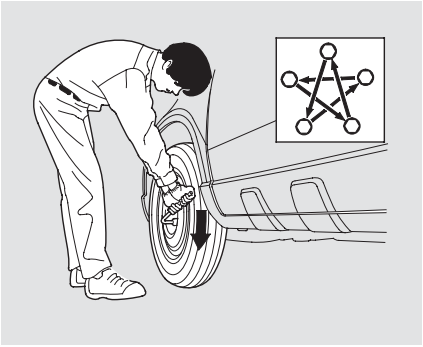

14. Tighten the wheel nuts securely in the same crisscross pattern. Have the wheel nut torque checked at the nearest automotive service facility.
    Tighten the wheel nuts to:
    80 lbf·ft (108 N·m , 11 kgf·m)

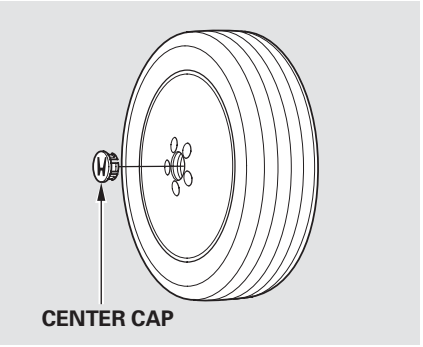

15. Remove the center cap before storing the flat tire.

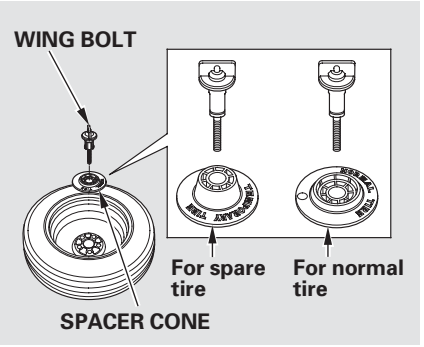

16. Place the flat tire face down in the spare tire well.

17. Remove the spacer cone from the wing bolt, turn it over, and put it back on the bolt.

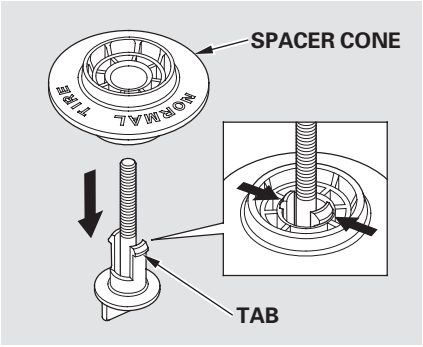

To remove the spacer cone, squeeze the tabs on the wing bolt to disengage it from the center of the spacer cone, then pull the bolt downward.

To install the wing bolt to the spacer cone, reverse this procedure.

18. Secure the flat tire by screwing the wing bolt back into its hole.

19. Store the jack in its holder. Turn the jack's end bracket to lock it in place. Store the tools, and place the cover on the flat tire of the cargo area.

⚠ WARNING

Loose items can fly around the interior in a crash and could seriously injure the occupants.

Store the wheel, jack, and tools securely before driving.

20. Store the center cap in the spare tire well. Make sure it does not get scratched or damaged.

21. Close the tailgate.

22. Your vehicle's original tire has a tire pressure monitoring system sensor. To replace a tire, refer to **Changing a Tire with TPMS** (see page 328).

If the Engine Won't Start

Diagnosing why the engine won't start falls into two areas, depending on what you hear when you turn the ignition switch to the START (III) position:

- You hear nothing, or almost nothing. The engine's starter motor does not operate at all, or operates very slowly.
- You can hear the starter motor operating normally, or the starter motor sounds like it is spinning faster than normal, but the engine does not start up and run.

Nothing Happens or the Starter Motor Operates Very Slowly

When you turn the ignition switch to the START (III) position, you do not hear the normal noise of the engine trying to start. You may hear a clicking sound, a series of clicks, or nothing at all.

Check these things:

- Check the transmission interlock. The transmission must be in Park or neutral or the starter will not operate.
- Turn the ignition switch to the ON (II) position. Turn on the headlights, and check their brightness. If the headlights are very dim or do not come on at all, the battery is discharged. See **Jump Starting** on page 390 .
- Turn the ignition switch to the START (III) position. If the headlights do not dim, check the condition of the fuses. If the fuses are OK, there is probably something wrong with the electrical circuit for the ignition switch or starter motor. You will need a qualified technician to determine the problem. See **Emergency Towing** on page 403 .

If the headlights dim noticeably or go out when you try to start the engine, either the battery is discharged or the connections are corroded. Check the condition of the battery and terminal connections (see page 376). You can then try jump starting the vehicle from a booster battery (see page 390).

The Starter Operates Normally
In this case, the starter motor's speed sounds normal, or even faster than normal, when you turn the ignition switch to the START (III) position, but the engine does not run.

- Are you using a properly coded key? An improperly coded key will cause the immobilizer system indicator in the instrument panel to blink rapidly (see page 83).
- Are you using the proper starting procedure? Refer to **Starting the Engine** on page 314 .
- Do you have fuel? Check the fuel gauge; the low fuel indicator may not be working.
- There may be an electrical problem, such as no power to the fuel pump. Check all the fuses (see page 397).

If you find nothing wrong, you will need a qualified technician to find the problem. See **Emergency Towing** on page 403 .

Jump Starting

Although this seems like a simple procedure, you should take several precautions.

⚠ WARNING

A battery can explode if you do not follow the correct procedure, seriously injuring anyone nearby.

Keep all sparks, open flames, and smoking materials away from the battery.

You cannot start your vehicle by pushing or pulling it.

To Jump Start Your Vehicle:

1. Open the hood, and check the physical condition of the battery. In very cold weather, check the condition of the electrolyte. If it seems slushy or frozen, do not try jump starting until it thaws.

NOTICE

If a battery sits in extreme cold, the electrolyte inside can freeze. Attempting to jump start with a frozen battery can cause it to rupture.

2. Turn off all the electrical accessories: heater, A/C, climate control, audio system, lights, etc. Put the transmission in Park, and set the parking brake.

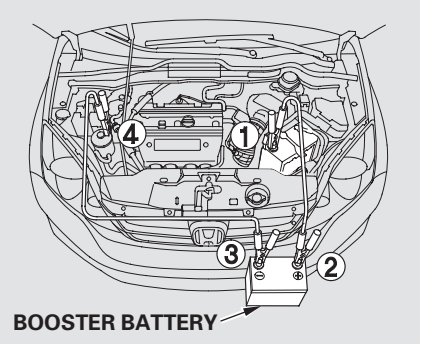

The numbers in the illustration show you the order to connect the jumper cables.

3. Connect one jumper cable to the positive (+) terminal on your battery. Connect the other end to the positive (+) terminal on the booster battery.

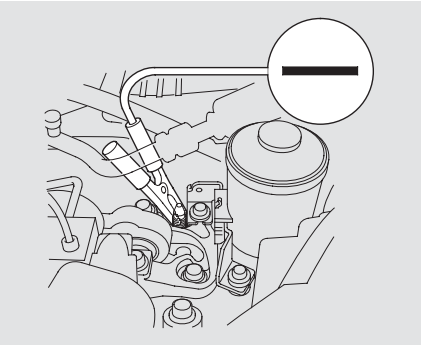

4. Connect the second jumper cable to the negative (−) terminal on the booster battery. Connect the other end to the stud bolt on the engine side as shown. Do not connect this jumper cable to any other part of the engine.

5. If the booster battery is in another vehicle, have an assistant start that vehicle and run it at a fast idle.

6. Start your vehicle. If the starter motor still operates slowly, check that the jumper cables have good metal-to-metal contact.

7. Once your vehicle is running, disconnect the negative cable from your vehicle, then from the booster battery. Disconnect the positive cable from your vehicle, then from the booster battery.

Keep the ends of the jumper cables away from each other and any metal on the vehicle until everything is disconnected. Otherwise, you may cause an electrical short.

If the Engine Overheats

The reading of the vehicle's temperature gauge should stay in the midrange. If it climbs to the red mark, you should determine the reason (hot day, driving up a steep hill, etc.).

If the vehicle overheats, you should take immediate action. The only indication may be the temperature gauge climbing to or above the red mark. Or you may see steam or spray coming from under the hood.

NOTICE

Driving with the temperature gauge reading at the red mark can cause serious damage to the engine.

⚠ WARNING

Steam and spray from an overheated engine can seriously scald you.

Do not open the hood if steam is coming out.

1. Safely pull to the side of the road. Put the transmission in Park, and set the parking brake. Turn off all the accessories, and turn on the hazard warning lights.
2. If you see steam and/or spray coming from under the hood, turn off the engine. Wait until you see no more signs of steam or spray, then open the hood.
3. If you do not see steam or spray, leave the engine running, and watch the temperature gauge. If the high heat is due to overloading, the engine should start to cool down almost immediately. If it does, wait until the temperature gauge reading comes down to the midpoint, then continue driving.
4. If the temperature gauge reading stays at the red mark, turn off the engine.

5. Look for any obvious coolant leaks, such as a split radiator hose. Everything is still extremely hot, so use caution. If you find a leak, it must be repaired before you continue driving (see **Emergency Towing** on page 403).

6. If you don't find an obvious leak, check the coolant level in the radiator reserve tank. Add coolant if the level is below the MIN mark.

7. If there was no coolant in the reserve tank, you may need to add coolant to the radiator. Let the engine cool down until the reading reaches the middle of the temperature gauge or lower before checking the radiator.

⚠ WARNING

Removing the radiator cap while the engine is hot can cause the coolant to spray out, seriously scalding you.

Always let the engine and radiator cool down before removing the radiator cap.

8. Using gloves or a large heavy cloth, turn the radiator cap counterclockwise, without pushing down, to the first stop. After the pressure releases, push down on the cap, and turn it until it comes off.

9. Start the engine, and set the temperature to maximum heat (climate control to AUTO at " Hi "). Add coolant to the radiator up to the base of the filler neck. If you do not have the proper coolant mixture available, you can add plain water. Remember to have the cooling system drained and refilled with the proper mixture as soon as you can.

10. Put the radiator cap back on tightly. Run the engine, and check the temperature gauge. If it goes back to the red mark, the engine needs repair (see **Emergency Towing** on page 403).

11. If the temperature stays normal, check the coolant level in the radiator reserve tank. If it has gone down, add coolant to the MAX mark. Put the cap back on tightly.

Low Oil Pressure Indicator, Charging System Indicator

Low Oil Pressure Indicator

This indicator should never come on when the engine is running. If it starts flashing or stays on, the oil pressure has dropped very low or lost pressure. Serious engine damage is possible, and you should take immediate action.

NOTICE

Running the engine with low oil pressure can cause serious mechanical damage almost immediately. Turn off the engine as soon as you can safely get the vehicle stopped.

1. Safely pull off the road, and shut off the engine. Turn on the hazard warning lights.

2. Let the vehicle sit for a minute. Open the hood, and check the oil level (see page 298). An engine very low on oil can lose pressure during cornering and other driving maneuvers.

3. If necessary, add oil to bring the level back to the full mark on the dipstick (see page 349).

4. Start the engine, and watch the oil pressure indicator. If it does not go out within 10 seconds, turn off the engine. There is a mechanical problem that needs to be repaired before you can continue driving (see **Emergency Towing** on page 403).

Charging System Indicator

If the charging system indicator comes on brightly when the engine is running, the battery is not being charged.

Immediately turn off all electrical accessories. Try not to use other electrically operated controls such as the power windows. Keep the engine running; starting the engine will discharge the battery rapidly.

Go to a service station or garage where you can get technical assistance.

Malfunction Indicator Lamp

If the indicator comes on while driving, it means one of the engine's emissions control systems may have a problem. Even though you may feel no difference in your vehicle's performance, it can reduce your fuel economy and cause increased emissions. Continued operation may cause serious damage.

If you have recently refueled your vehicle, the indicator coming on could be due to a loose or missing fuel fill cap. Tighten the cap until it clicks at least once. Tightening the cap will not turn the indicator off immediately; it can take several days of normal driving.

If the indicator comes on repeatedly, even though it may turn off as you continue driving, have your vehicle checked by your dealer as soon as possible.

NOTICE

If you keep driving with the malfunction indicator lamp on, you can damage your vehicle's emissions controls and engine. Those repairs may not be covered by your vehicle's warranties.

The malfunction indicator lamp may also come on with the "D" indicator.

Readiness Codes

Your vehicle has certain "readiness codes" that are part of the on-board diagnostics for the emissions systems. In some states, part of the emissions testing is to make sure these codes are set. If they are not set, the test cannot be completed.

If the battery in your vehicle has been disconnected or gone dead, these codes may be erased. It can take several days of driving under various conditions to set the codes again.

To check if they are set, turn the ignition switch to the ON (II) position, without starting the engine. The malfunction indicator lamp will come on for 20 seconds. If it then goes off, the readiness codes are set. If it blinks five times, the readiness codes are not set. If possible, do not take your vehicle for an emissions test until the readiness codes are set. Refer to **Emissions Testing** for more information (see page 419).

Brake System Indicator

U.S. BRAKE | Canada (!)

The brake system indicator normally comes on when you turn the ignition switch to the ON (II) position, and as a reminder to check the parking brake. It will stay on if you do not fully release the parking brake.

If the brake system indicator comes on while driving, the brake fluid level is probably low. Press lightly on the brake pedal to see if it feels normal. If it does, check the brake fluid level the next time you stop at a service station (see page 357).

If the fluid level is low, take your vehicle to a dealer, and have the brake system inspected for leaks or worn brake pads.

However, if the brake pedal does not feel normal, you should take immediate action. A problem in one part of the system's dual circuit design will still give you braking at two wheels. You will feel the brake pedal go down much farther before the vehicle begins to slow down, and you will have to press harder on the pedal.

Slow down by shifting to a lower gear, and pull to the side of the road when it is safe. Because of the long distance needed to stop, it is hazardous to drive the vehicle. You should have it towed and repaired as soon as possible (see **Emergency Towing** on page 403).

If you must drive the vehicle a short distance in this condition, drive slowly and carefully.

If the ABS indicator and the VSA system indicator come on with the brake system indicator, have your vehicle inspected by your dealer immediately.

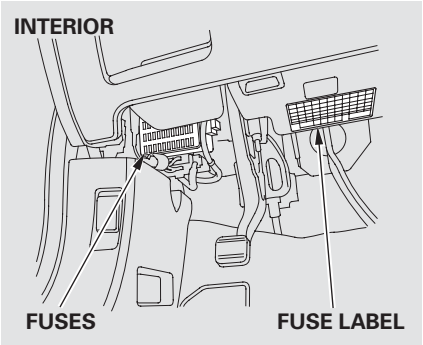

The vehicle's fuses are contained in three fuse boxes.

The interior fuse box is located under the dashboard on the driver's side. The fuse label is attached under the steering column.

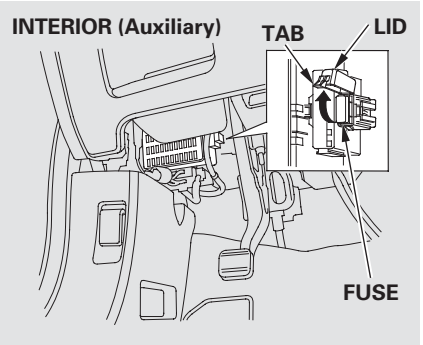

The auxiliary fuse box is located next to the interior fuse box.

To open the fuse box lid, pull the tab in the direction as shown in the illustration.

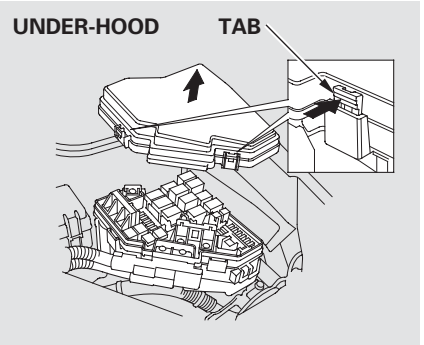

The under-hood fuse box is on the driver's side. To open it, push the tabs as shown.

Fuses

Checking and Replacing Fuses
If something electrical in your vehicle stops working, check for a blown fuse first. Determine from the chart on pages 401 and 402 , or the diagram on the fuse box lid, which fuse or fuses control that device. Check those fuses first, but check all the fuses before deciding that a blown fuse is the cause. Replace any blown fuses, and check if the device works.

1. Turn the ignition switch to the LOCK (0) position. Make sure the headlights and all other accessories are off.

2. On the under-hood fuse box, remove the cover from the fuse box.

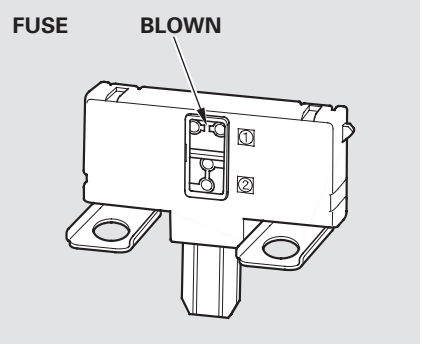

3. Check each of the large fuses in the under-hood fuse box by looking through the side window at the wire inside. Removing these fuses requires a Phillips-head screwdriver.

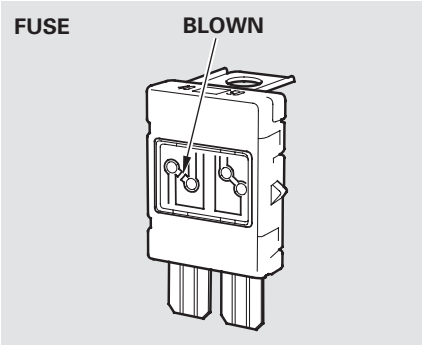

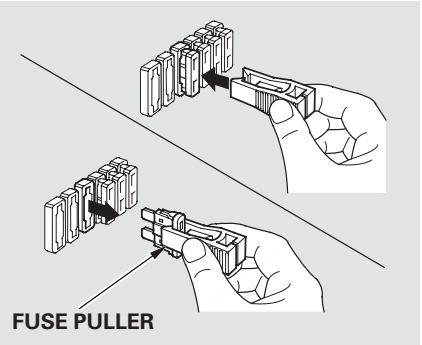

4. Check the smaller fuses in the under-hood fuse box and all the fuses in the interior fuse box by pulling out each one with the fuse puller provided on the back of the under-hood fuse box cover.

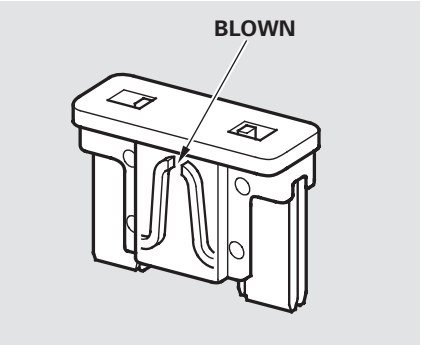

5. Look for a blown wire inside the fuse. If it is blown, replace it with one of the spare fuses of the same rating or lower.

   Your vehicle has spare fuses on the back of the under-hood fuse box cover.

CONTINUED

Fuses

If you cannot drive the vehicle without fixing the problem, and you do not have a spare fuse, take a fuse of the same rating or a lower rating from one of the other circuits. Make sure you can do without that circuit temporarily (such as the accessory power socket).

If you replace the blown fuse with a spare fuse that has a lower rating, it might blow out again. This does not indicate that anything is wrong. Replace the fuse with one of the correct rating as soon as you can.

NOTICE

Replacing a fuse with one that has a higher rating greatly increases the chances of damaging the electrical system. If you do not have a replacement fuse with the proper rating for the circuit, install one with a lower rating.

6. If the replacement fuse of the same rating blows in a short time, there is probably a serious electrical problem in your vehicle. Leave the blown fuse in that circuit and have your vehicle checked by a qualified technician.

Fuse Locations

INTERIOR FUSE BOX

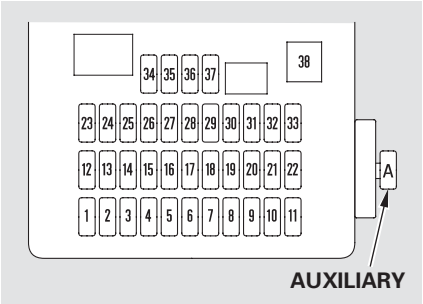

No.	Amps.	Circuits Protected
1	7.5 A	Power Window Relay
2	15 A	Fuel Pump
3	10 A	ACG
4	7.5 A	ABS/VSA
5	(15 A)	Heated Seats*
6	—	Not used
7	—	Not used
8	10 A	Rear Wiper
9	7.5 A	ODS (Occupant Detection System)
10	7.5 A	Meter
11	10 A	SRS
12	10 A	Right Headlight High Beam
13	10 A	Left Headlight High Beam
14	7.5 A	Small Light (Interior)
15	7.5 A	Small Light (Exterior)
16	10 A	Right Headlight Low Beam
17	10 A	Left Headlight Low Beam
18	20 A	Main Headlight High Beam
19	15 A	Small Lights MAIN
20	7.5 A	TPMS
21	20 A	Main Headlight Low Beam
22	—	Not used
23	—	Not used
24	(20 A)	Moonroof*
25	20 A	Door Lock
26	20 A	Front Left Power Window
27	—	Not used
28	15 A	Rear Accessory Power Socket
29	15 A	Front Accessory Power Socket
30	20 A	Front Right Power Window
31	(15 A)	Accessory Power Socket* (in the Console Compartment/ on the Center Table)
32	20 A	Rear Right Power Window
33	20 A	Rear Left power window
34	7.5 A	ACC Radio
35	7.5 A	ACC Key lock
36	10 A	HAC
37	7.5 A	Daytime Running Lights
38	30 A	Front Wiper

*: If equipped

Auxiliary

No.	Amps.	Circuits Protected
A	10 A	VB SOL
B	—	—

Fuse Locations

UNDER-HOOD FUSE BOX

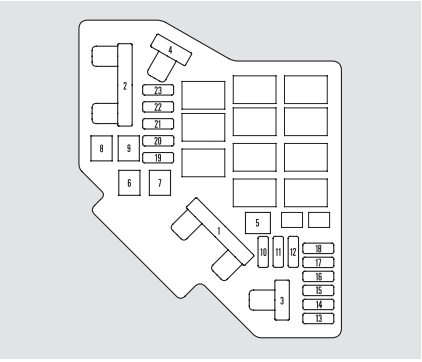

No.	Amps.	Circuits Protected
1	100 A	Battery
	—	Not used
2	80 A	Option Main
	50 A	Ignition Switch Main
3	20 A	ABS/VSA FSR
	40 A	ABS/VSA Motor
4	50 A	Headlight Main
	40 A	Power Window Main
5	—	Not used
6	20 A	Sub Fan Motor
7	20 A	Main Fan Motor
8	30 A	Rear Defogger
9	40 A	Blower
10	15 A	Hazard
11	15 A	LAF
12	15 A	Stop and Horn

No.	Amps.	Circuits Protected
13	(20 A)	Power Seat DR RR HI/ Reclining*
14	(20 A)	Power Seat DR FR HI/Sliding*
15	7.5 A	IGPS OIL LEVEL
16	—	Not used
17	(15 A)	High Power Sound*/ Windshield Defroster
18	15 A	IG Coil
19	15 A	FI Main
20	7.5 A	MG Clutch
21	15 A	DBW
22	7.5 A	Interior Light
23	10 A	Back Up

*: If equipped

If your vehicle needs to be towed, call a professional towing service or organization. Never tow your vehicle with just a rope or chain. It is very dangerous.

On 4WD models
The only way you can safely tow your vehicle is with flat-bed equipment. The operator will load your vehicle on the back of a truck. Any other method of towing will damage the drive system. When you contact the towing agency, inform them a flat-bed is required.

NOTICE

Towing with only two tires on the ground will damage parts of the 4WD system. It should be transported on a flat-bed truck or trailer.

On 2WD models
There are two ways to tow your vehicle:

Flat-bed Equipment — The operator loads your vehicle on the back of a truck. **This is the best way to transport your vehicle.**

Wheel-lift Equipment — The tow truck uses two pivoting arms that go under the front tires and lift them off the ground. The rear tires remain on the ground. **This is an acceptable way to tow your vehicle.**

If, due to damage, your vehicle must be towed with the front wheels on the ground, do this:

- Start the engine.
- Shift to the D position and hold for 5 seconds, then to N.
- Turn off the engine.
- Leave the ignition switch in the ACCESSORY (I) position so the steering wheel does not lock.
- Release the parking brake.

NOTICE

Improper towing preparation will damage the transmission. Follow the above procedure exactly. If you cannot shift the transmission or start the engine, your vehicle must be transported with the all four wheels off the ground.

CONTINUED

Emergency Towing

With the front wheels on the ground, it is best to tow the vehicle no farther than 50 miles (80 km), and keep the speed below 35 mph (55 km/h).

NOTICE

Trying to lift or tow your vehicle by the bumpers will cause serious damage. The bumpers are not designed to support the vehicle's weight.

NOTICE

The steering system can be damaged if the steering wheel is locked. Leave the ignition switch in the ACCESSORY (I) position, and make sure the steering wheel turns freely before you begin towing.

Refer to **Towing Your Vehicle Behind a Motorhome** on page 334 for non-emergency towing information.

Technical Information

The diagrams in this section give you the dimensions and capacities of your vehicle and the locations of the identification numbers. It also includes information you should know about your vehicle's tires and emissions control systems.

Identification Numbers 406
Specifications 408
DOT Tire Quality Grading (U.S. Vehicles) 410
Tire Labeling 412
Tire Pressure Monitoring System (TPMS) — Required Federal Explanation 414
Emissions Controls 416
Three Way Catalytic Converters 418
Emissions Testing 419

Identification Numbers

Your vehicle has several identifying numbers located in various places.

The vehicle identification number (VIN) is the 17-digit number your dealer uses to register your vehicle for warranty purposes. It is also necessary for licensing and insuring your vehicle. The easiest place to find the VIN is on a plate fastened to the top of the dashboard. You can see it by looking through the windshield on the driver's side. It is also on the certification label attached to the driver's doorjamb, and is stamped on the engine compartment bulkhead. The VIN is also provided in bar code on the certification label.

To access the VIN in the engine compartment, pull down the lid on the back of the engine compartment. Make sure to close the lid before closing the hood.

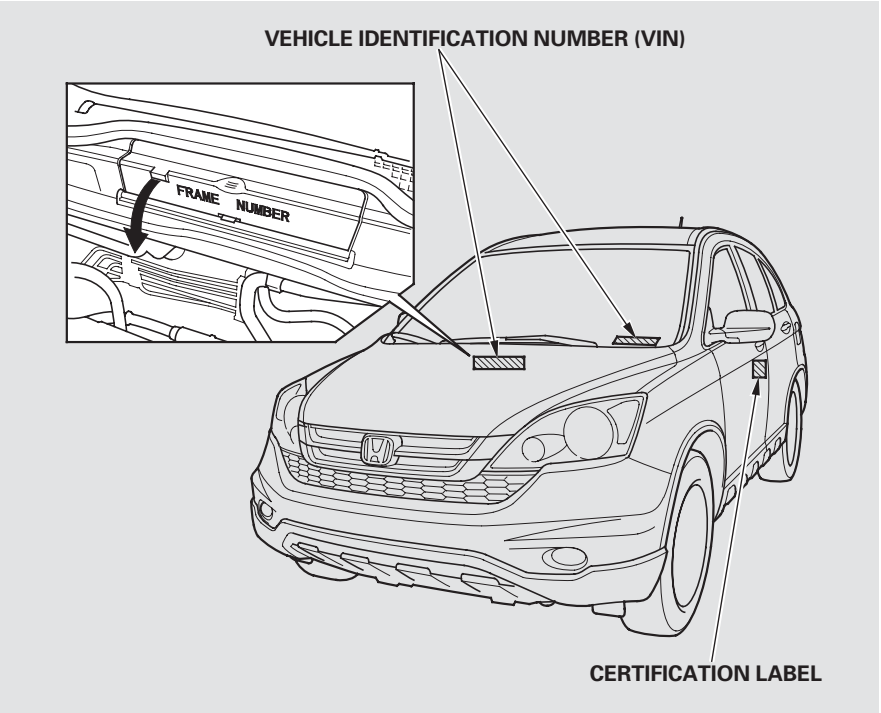

Identification Numbers

The engine number is stamped into the front of the engine block.

You can see the engine number through the window next to the “H” logo.

The transmission number is on a label on top of the transmission.

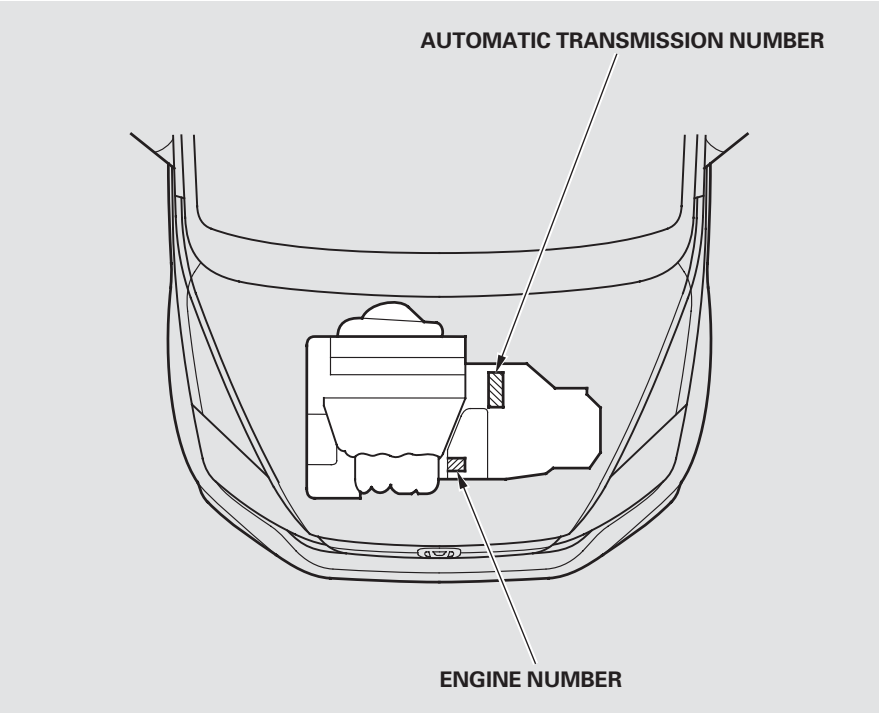

Specifications

Dimensions

Length		179.3 in (4,555 mm)
Width		71.6 in (1,820 mm)
Height		66.1 in (1,680 mm)
Wheelbase		103.1 in (2,620 mm)
Track	Front	61.6 in (1,565 mm)
	Rear	61.6 in (1,565 mm)

Weights

Gross vehicle weight rating	See the certification label attached to the driver's doorjamb.

Engine

Type	Water cooled 4-stroke DOHC i-VTEC 4-cylinder gasoline engine
Bore x Stroke	3.43 x 3.90 in (87.0 x 99.0 mm)
Displacement	144 cu-in (2,354 cm^3)
Compression ratio	10.5 : 1
Spark plugs	ILZKR7B-11S (NGK) SXU22HCR11S (DENSO)

Capacities

Fuel tank		Approx. 15.3 US gal (58 ℓ)
Engine oil	Change*1	
	Including filter	4.4 US qt (4.2 ℓ)
	Without filter	4.2 US qt (4.0 ℓ)
	Total	5.6 US qt (5.3 ℓ)

Capacities

Engine coolant	Change*2	1.56 US gal (5.9 ℓ)
	Total	1.85 US gal (7.0 ℓ)
Automatic transmission fluid	Change	
	4WD	2.6 US qt (2.5 ℓ)
	2WD	2.6 US qt (2.5 ℓ)
	Total	
	4WD	7.4 US qt (7.0 ℓ)
	2WD	6.71 US qt (6.35 ℓ)
Rear differential fluid (4WD)	Change	1.3 US qt (1.2 ℓ)
	Total	1.5 US qt (1.4 ℓ)
Windshield washer reservoir	U.S. Vehicles	2.6 US qt (2.5 ℓ)
	Canadian Vehicles	4.8 US qt (4.5 ℓ)

*1 : Excluding the oil remaining in the engine
*2 : Including the coolant in the reserve tank and that remaining in the engine
Reserve tank capacity:
0.16 US gal (0.6 ℓ)

Specifications

Seating Capacities

Total	5
Front	2
Rear	3

Air Conditioning

Refrigerant type	HFC-134a (R-134a)
Charge quantity	15.5 – 17.3 oz (440 – 490 g)
Lubricant type	SP-10

Lights

Headlights High/Low	60/55 W (HB2)
Front turn signal lights	21 W (Amber)
Parking lights/side marker lights	3 CP
Rear turn signal lights	21 W (Amber)
Stop/Taillights	21/5 W
Back-up lights	21 W
Taillight/Rear side marker lights	5 W
High-mount brake light	21 W
License plate light	5 W
Ceiling light	8 W
Spotlights	8 W
Cargo area light	8 W
Vanity mirror Lights*	2 W

* : EX, EX-L

Battery

Capacity	12 V – 36 AH/5 HR 12 V – 38 AH/5 HR 12 V – 45 AH/20 HR 12 V – 47 AH/20 HR

Fuses

Interior	See page 401 or the fuse label attached under the steering column.
Under-hood	See page 402 or the fuse box cover.

Alignment

Toe-in	Front	0.0 in (0 mm)
	Rear	0.08 in (2.0 mm)
Camber	Front	0°
	Rear	–1°00′
Caster	Front	2°44′

Tires

Size	Front/Rear	225/65R17 102T
	Spare	T155/90D17 101M T155/90R17 101M
Pressure	Front	30 psi (210 kPa , 2.1 kgf/cm²)
	Rear	30 psi (210 kPa , 2.1 kgf/cm²)
	Spare	60 psi (420 kPa , 4.2 kgf/cm²)

DOT Tire Quality Grading (U.S. Vehicles)

The tires on your vehicle meet all U.S. Federal Safety Requirements. All tires are also graded for treadwear, traction, and temperature performance according to Department of Transportation (DOT) standards. The following explains these gradings.

Uniform Tire Quality Grading
Quality grades can be found where applicable on the tire sidewall between tread shoulder and maximum section width. For example:

Treadwear 200
Traction AA
Temperature A

All passenger car tires must conform to Federal Safety Requirements in addition to these grades.

Treadwear
The treadwear grade is a comparative rating based on the wear rate of the tire when tested under controlled conditions on a specified government test course. For example, a tire graded 150 would wear one and one-half (1 1/2) times as well on the government course as a tire graded 100. The relative performance of tires depends upon the actual conditions of their use, however, and may depart significantly from the norm due to variations in driving habits, service practices and differences in road characteristics and climate.

Traction
The traction grades, from highest to lowest, are AA, A, B, and C. Those grades represent the tire's ability to stop on wet pavement as measured under controlled conditions on specified government test surfaces of asphalt and concrete. A tire marked C may have poor traction performance.

Warning: The traction grade assigned to this tire is based on straight-ahead braking traction tests, and does not include acceleration, cornering, hydroplaning, or peak traction characteristics.

DOT Tire Quality Grading (U.S. Vehicles)

Temperature
The temperature grades are A (the highest), B, and C, representing the tire's resistance to the generation of heat and its ability to dissipate heat when tested under controlled conditions on a specified indoor laboratory test wheel. Sustained high temperature can cause the material of the tire to degenerate and reduce tire life, and excessive temperature can lead to sudden tire failure. The grade C corresponds to a level of performance which all passenger car tires must meet under the Federal Motor Vehicle Safety Standard No. 109. Grades B and A represent higher levels of performance on the laboratory test wheel than the minimum required by law.

Warning: The temperature grade for this tire is established for a tire that is properly inflated and not overloaded. Excessive speed, underinflation, or excessive loading, either separately or in combination, can cause heat buildup and possible tire failure.

Tire Labeling

The tires that came on your vehicle have a number of markings. Those you should be aware of are described below.

TIRE LABELING EXAMPLE

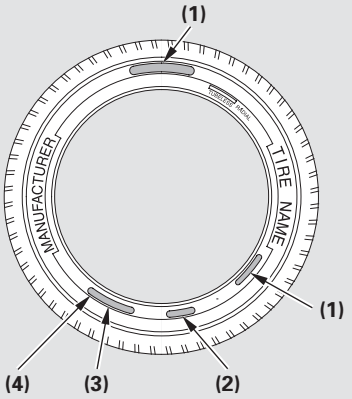

(1) Tire Size
(2) Tire Identification Number (TIN)
(3) Maximum Tire Pressure
(4) Maximum Tire Load

Tire Size
Whenever tires are replaced, they should be replaced with tires of the same size. Below is an example of tire size with an explanation of what each component means.

225/65R17 102T

225 — Tire width in millimeters.

65 — Aspect ratio (the tire's section height as a percentage of its width).

R — Tire construction code (R indicates radial).

17 — Rim diameter in inches.

102 — Load index (a numerical code associated with the maximum load the tire can carry).

T — Speed symbol (an alphabetical code indicating the maximum speed rating).

Tire Identification Number (TIN)
The tire identification number (TIN) is a group of numbers and letters that look like the following example. TIN is located on the sidewall of the tire.

DOT B97R FW6X 2202

DOT — This indicates that the tire meets all requirements of the U.S. Department of Transportation.

B97R — Manufacturer's identification mark.

FW6X — Tire type code.

2202 — Date of manufacture.
- Year
- Week

Glossary of Tire Terminology

Cold Tire Pressure — The tire air pressure when the vehicle has been parked for at least three hours or driven less than 1 mile (1.6 km).

Load Rating — Means the maximum load that a tire is rated to carry for a given inflation pressure.

Maximum Inflation Pressure — The maximum tire air pressure that the tire can hold.

Maximum Load Rating — Means the load rating for a tire at the maximum permissible inflation pressure for that tire.

Recommended Inflation Pressure — The cold tire inflation pressure recommended by the manufacturer.

Treadwear Indicators (TWI) — Means the projections within the principal grooves designed to give a visual indication of the degrees of wear of the tread.

Tire Pressure Monitoring System (TPMS) – Required Federal Explanation

Each tire, including the spare (if provided), should be checked monthly when cold and inflated to the inflation pressure recommended by the vehicle manufacturer on the vehicle placard or tire inflation pressure label.

(If your vehicle has tires of a different size than the size indicated on the vehicle placard or tire inflation pressure label, you should determine the proper tire inflation pressure for those tires.)

As an added safety feature, your vehicle has been equipped with a tire pressure monitoring system (TPMS) that illuminates a low tire pressure telltale

when one or more of your tires is significantly under-inflated.

Accordingly, when the low tire pressure telltale illuminates, you should stop and check your tires as soon as possible, and inflate them to the proper pressure.

Driving on a significantly under-inflated tire causes the tire to overheat and can lead to tire failure. Under-inflation also reduces fuel efficiency and tire tread life, and may affect the vehicle's handling and stopping ability.

Please note that the TPMS is not a substitute for proper tire maintenance, and it is the driver's responsibility to maintain correct tire pressure, even if under-inflation has not reached the level to trigger illumination of the TPMS low tire pressure telltale.

Tire Pressure Monitoring System (TPMS) – Required Federal Explanation

Your vehicle has also been equipped with a TPMS malfunction indicator to indicate when the system is not operating properly. The TPMS malfunction indicator is provided by a separate telltale, which displays the symbol “TPMS” when illuminated.

When the malfunction indicator is illuminated,

TPMS

the system may not be able to detect or signal low tire pressure as intended.

TPMS malfunctions may occur for a variety of reasons, including the installation of replacement or alternate tires or wheels on the vehicle that prevent the TPMS from functioning properly.

Always check the TPMS malfunction telltale after replacing one or more tires or wheels on your vehicle to ensure that the replacement or alternate tires and wheels allow the TPMS to continue to function properly.

Emissions Controls

The burning of gasoline in your vehicle's engine produces several by-products. Some of these are carbon monoxide (CO), oxides of nitrogen (NOx), and hydrocarbons (HC). Gasoline evaporating from the tank also produces hydrocarbons. Controlling the production of NOx, CO, and HC is important to the environment. Under certain conditions of sunlight and climate, NOx and HC react to form photochemical "smog." Carbon monoxide does not contribute to smog creation, but it is a poisonous gas.

The Clean Air Act
The United States Clean Air Act* sets standards for automobile emissions. It also requires that automobile manufacturers explain to owners how their emissions controls work and what to do to maintain them. This section summarizes how the emissions controls work.

* In Canada, Honda vehicles comply with the Canadian emission requirements, as specified in an agreement with Environment Canada, at the time they are manufactured.

Crankcase Emissions Control System
Your vehicle has a positive crankcase ventilation system. This keeps gasses that build up in the engine's crankcase from going into the atmosphere. The positive crankcase ventilation valve routes them from the crankcase back to the intake manifold. They are then drawn into the engine and burned.

Evaporative Emissions Control System
As gasoline evaporates in the fuel tank, an evaporative emissions control canister filled with charcoal adsorbs the vapor. It is stored in this canister while the engine is off. After the engine is started and warmed up, the vapor is drawn into the engine and burned during driving.

Onboard Refueling Vapor Recovery
The onboard refueling vapor recovery (ORVR) system captures the fuel vapors during refueling. The vapors are adsorbed in a canister filled with activated carbon. While driving, the fuel vapors are drawn into the engine and burned off.

Exhaust Emissions Controls

The exhaust emissions controls include three systems: PGM-FI, ignition timing control, and three way catalytic converter. These three systems work together to control the engine's combustion and minimize the amount of HC, CO, and NOx that comes out the tailpipe. The exhaust emissions control systems are separate from the crankcase and evaporative emissions control systems.

PGM-FI System

The PGM-FI system uses sequential multiport fuel injection.
It has three subsystems: air intake, engine control, and fuel control. The powertrain control module (PCM) uses various sensors to determine how much air is going into the engine. It then controls how much fuel to inject under all operating conditions.

Ignition Timing Control System

This system constantly adjusts the ignition timing, reducing the amount of HC, CO, and NOx produced.

Three Way Catalytic Converter

The three way catalytic converter is in the exhaust system. Through chemical reactions, it converts HC, CO, and NOx in the engine's exhaust to carbon dioxide (CO_2), nitrogen (N_2), and water vapor.

Replacement Parts

The emissions control systems are designed and certified to work together in reducing emissions to levels that comply with the Clean Air Act. To make sure the emissions remain low, you should use only new Honda replacement parts or their equivalent for repairs. Using lower quality parts may increase the emissions from your vehicle.

The emissions control systems are covered by warranties separate from the rest of your vehicle. Read your warranty manual for more information.

Three Way Catalytic Converters

The three way catalytic converters contain precious metals that serve as catalysts, promoting chemical reactions to convert the exhaust gasses without affecting the metals. The catalytic converters are referred to as three-way catalysts, since they act on HC, CO, and NOx. Replacement units must be original Honda parts or their equivalent.

The three way catalytic converters must operate at a high temperature for the chemical reactions to take place. They can set on fire any combustible materials that come near them. Park your vehicle away from high grass, dry leaves, or other flammables.

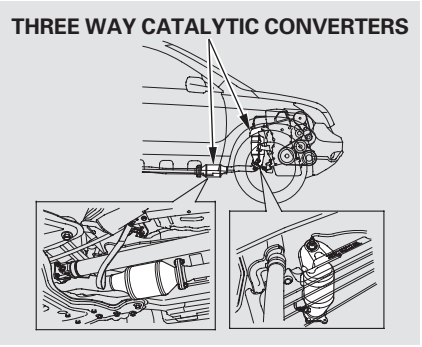

Defective three way catalytic converters contribute to air pollution, and can impair your engine's performance. Follow these guidelines to protect your vehicle's three way catalytic converters.

- Always use unleaded gasoline. Even a small amount of leaded gasoline can contaminate the catalyst metals, making the three way catalytic converters ineffective.
- Keep the engine well maintained.
- Have your vehicle diagnosed and repaired if it is misfiring, back-firing, stalling, or otherwise not running properly.

Testing of Readiness Codes
If you take your vehicle for an emissions test shortly after the battery has been disconnected or gone dead, it may not pass the test. This is because of certain "readiness codes" that must be set in the on-board diagnostics for the emissions systems. These codes are erased when the battery is disconnected, and set again only after several days of driving under a variety of conditions.

If the testing facility determines that the readiness codes are not set, you will be requested to return at a later date to complete the test. If you must get the vehicle retested within the next two or three days, you can condition the vehicle for retesting by doing the following.

1. Make sure the gas tank is nearly, but not completely, full (around 3/4).

2. Make sure the vehicle has been parked with the engine off for 6 hours or more.

3. Make sure the ambient temperature is between 40° and 95°F (4° and 35°C).

4. Without touching the accelerator pedal, start the engine, and let it idle for 20 seconds.

5. Keep the vehicle in Park. Increase the engine speed to 2,000 rpm, and hold it there until the temperature gauge rises to at least 1/4 of the scale (about 3 minutes).

6. Without touching the accelerator pedal, let the engine idle for 20 seconds.

CONTINUED

Emissions Testing

7. Select a nearby lightly traveled major highway where you can maintain a speed of 50 to 60 mph (80 to 97 km/h) for at least 20 minutes. Drive on the highway in D. Do not use the cruise control. When traffic allows, drive for 90 seconds without moving the accelerator pedal. (Vehicle speed may vary slightly; this is okay.) If you cannot do this for a continuous 90 seconds because of traffic conditions, drive for at least 30 seconds, then repeat it two more times (for a total of 90 seconds).

8. Then drive in city/suburban traffic for at least 10 minutes. When traffic conditions allow, let the vehicle coast for several seconds without using the accelerator pedal or the brake pedal.

9. Make sure the vehicle has been parked with the engine off for 30 minutes.

If the testing facility determines the readiness codes are still not set, see your dealer.

Warranty and Customer Relations

Customer Service Information..... 422
Warranty Coverages 423
Reporting Safety Defects..... 424
Authorized Manuals..... 425

Customer Service Information

Honda dealership personnel are trained professionals. They should be able to answer all your questions. If you encounter a problem that your dealership does not solve to your satisfaction, please discuss it with the dealership's management. The service manager or general manager can help. Almost all problems are solved in this way.

If you are dissatisfied with the decision made by the dealership's management, contact Honda Customer Service.

U.S. Owners:
American Honda Motor Co., Inc.
Automobile Customer Service
Mail Stop 500-2N-7A
1919 Torrance Boulevard
Torrance, California 90501-2746

Tel: (800) 999-1009

Canadian Owners:
Honda Canada Inc.
Customer Relations
180 Honda Boulevard
Markham, ON
L6C 0H9

Tel: 1-888-9-HONDA-9
Fax: 1-877-939-0909
E-Mail: ch_honda_cr@ch.honda.com

In Puerto Rico and the U.S. Virgin Islands:
Vortex Motor Corp.
Bella International
P.O. Box 190816
San Juan, PR 00919-0816

Tel: (787) 620-7546

When you call or write, please give us this information:

- Vehicle Identification Number (see page 406)
- Name and address of the dealer who services your vehicle
- Date of purchase
- Odometer reading of your vehicle
- Your name, address, and telephone number
- A detailed description of the problem
- Name of the dealer who sold the vehicle to you

U.S. Owners
Your new vehicle is covered by these warranties:

New Vehicle Limited Warranty — covers your new vehicle, except for the emissions control systems and accessories, against defects in materials and workmanship.

Emissions Control Systems Defects Warranty and Emissions Performance Warranty — these two warranties cover your vehicle's emissions control systems. Time, mileage, and coverage are conditional. Please read your warranty booklet for exact information.

Seat Belt Limited Warranty — a seat belt that fails to function properly is covered by a limited warranty. Please read your warranty booklet for details.

Rust Perforation Limited Warranty — all exterior body panels are covered for rust-through from the inside for the specified time period with no mileage limit.

Accessory Limited Warranty — Honda accessories are covered under this warranty. Time and mileage limits depend on the type of accessory and other factors. Please read your warranty booklet for details.

Replacement Parts Limited Warranty — covers all Honda replacement parts against defects in materials and workmanship.

Replacement Battery Limited Warranty — provides prorated coverage for a replacement battery purchased from your dealer.

Replacement Muffler Lifetime Limited Warranty — provides coverage for as long as the purchaser of the muffler owns the vehicle.

Restrictions and exclusions apply to all these warranties. Please read the 2011 Honda warranty information booklet that came with your vehicle for precise information on warranty coverages. Your vehicle's original tires are covered by their manufacturer. Tire warranty information is in a separate booklet.

Canadian Owners
Please refer to the 2011 warranty manual that came with your vehicle.

Reporting Safety Defects

In the US

If you believe that your vehicle has a defect which could cause a crash or could cause injury or death, you should immediately inform the National Highway Traffic Safety Administration (NHTSA), in addition to notifying American Honda Motor Co., Inc.

If NHTSA receives similar complaints, it may open an investigation, and if it finds that a safety defect exists in a group of vehicles, it may order a recall and remedy campaign. However, NHTSA cannot become involved in individual problems between you, your dealer, or American Honda Motor Co., Inc.

To contact NHTSA, you may call the Vehicle Safety Hotline toll-free at 1-888-327-4236 (TTY: 1-800-424-9153); go to *http://www.safercar.gov*; or write to: Administrator, NHTSA, 1200 New Jersey Avenue, SE., Washington, DC 20590.
You can also obtain other information about motor vehicle safety from *http://www.safercar.gov*.

In Canada

If you believe that your vehicle has a defect which could cause a crash or could cause injury or death, you should immediately inform Honda Canada Inc. and you may also inform Transport Canada.

If Transport Canada receives similar complaints, it may open an investigation, and if it finds that a safety defect exists in a group of vehicles, it may lead to a recall and remedy campaign. However, Transport Canada cannot become involved in individual problems between you, your dealer, or Honda Canada Inc.

To contact Transport Canada's Defect Investigations and Recalls Division, you may call 1-800-333-0510. For more information on reporting safety defects or about motor vehicle safety, go to *http://www.tc.gc.ca/roadsafety*.

Purchasing Factory Authorized Manuals (U.S. only)

The publications shown below can be purchased from Helm Incorporated. You can order by phone or online:

- Call Helm Inc. at 1-800-782-4356 (credit card orders only)
- Go online at *www.helminc.com*

If you are interested in other years or models, contact Helm Inc. at 1-800-782-4356.

Publication Form Number	Form Description
61SWA04	2007-2011 Honda CR-V Service Manual
61SWA04EL	2007-2011 Honda CR-V Electrical Troubleshooting Manual
61SWA30	2007 Honda CR-V Body Repair Manual
31SWA640	2011 Honda CR-V Owner's Manual
31SWA840	2011 Honda CR-V Navigation System Owner's Manual
31SWAM40	2011 Honda CR-V Honda Service History
31SWAQ40	2011 Honda CR-V Technology Reference Guide
HON-R	Order Form for Previous Years-Indicate Year and Model Desired

Service Manual:
Covers maintenance and recommended procedures for repair to engine and chassis components. It is written for the journeyman mechanic, but it is simple enough for most mechanically inclined owners to understand.

Electrical Troubleshooting Manual:
Complements the Service Manual by providing in-depth troubleshooting information for each electrical circuit in your vehicle.

Body Repair Manual:
Describes the procedures involved in the replacement of damaged body parts.

Index

A

Accessories..... 302
ACCESSORY (Ignition Key Position) 84
Accessory Power Sockets..... 123
Active Head Restraint 103
Additives, Engine Oil..... 350
Adjusting the Steering Wheel..... 81
Advanced Airbags..... 27
Airbag (SRS) 10, 23
Air Conditioning System..... 130, 135
  Usage 133, 136
Air Pressure, Tires 371
Alcohol in Gasoline..... 294
Antifreeze 352
Anti-lock Brakes (ABS)
  Indicator..... 63, 322
  Operation 322
Anti-theft, Audio System..... 258
Anti-theft Steering Column Lock .. 84
Audio System 143
Auto Door Locking/Unlocking..... 86
Automatic Climate Control..... 135
Automatic Seat Belt Tensioners 21
Automatic Speed Control..... 266
Automatic Transmission..... 315
  Capacity, Fluid 408
  Checking Fluid Level 355
  D3 Mode 317
  Shifting..... 315
  Shift Lever Position Indicators..... 315
  Shift Lever Positions 316
  Shift Lock Release..... 319
Auxiliary Input Jack..... 257

B

Battery
  Charging System Indicator..... 62, 394
  Jump Starting 390
  Maintenance..... 376
  Specifications 409
Before Driving 293
Belts, Seat 9, 19
Beverage Holders..... 119
Bluetooth® Hands Free Link® 269
Booster Seats 52
Brakes
  Anti-lock System (ABS) 322
  Break-in, New Linings 294
  Bulb Replacement 362
  Fluid 357
  Parking..... 81
  System Indicator..... 62, 396
  System Design 321
  Wear Indicators 321
Braking System..... 321
Break-in, New Vehicle 294
Brightness Control, Instruments... 79
Bulb Replacement
  Back-up Lights 362
  Brake Lights..... 362
  Front Parking Lights..... 361
  Front Side Marker Lights..... 361
  Headlights 359
  High-mount Brake Light 364
  Rear Side Marker Lights 362
  Specifications 409
  Turn Signal Lights..... 361, 362
Bulbs, Halogen..... 359

CONTINUED

Index

C

Capacities Chart 408
Carbon Monoxide Hazard 55
Cargo 304
Cargo area Light 127
Cargo Hooks 309
Carrying Cargo 304
Cargo, How to Carry 304
CAUTION, Explanation of iii
CD Care 252
CD Changer 166, 215
CD Changer Error
  Messages 176, 221
CD Error Messages 156, 214
CD Player 149, 206
Center Pocket 116
Center Table 120
Certification Label 406
Chains, Tires 375
Changing a Flat Tire 383
Changing Oil 350
  How to 350
  When to 341
Charging System Message 62, 394
Check Fuel Cap Indicator 296
Checklist, Before Driving 313
Child Safety 35
  Booster Seats 52
  Child Seats 42, 43
  Important Safety
    Reminders 35-54
  Infants 40
  Larger Children 51
  LATCH 44
  Risks with Airbags 36
  Small Children 41
  Tethers 49
  Warning Labels 37
  Where Should a Child Sit? 36
Child Seats 35
  LATCH 44
  Tether Anchorage Points 49
Childproof Door Locks 91
Cleaning Seat Belts 365
Climate Control Sensors 135
Clock 259
CO in the Exhaust 55, 416
Cold Weather, Starting in 314
Compass 260
Consumer Information 422
Controls, Instruments and 59
Conversation Mirror 123
Coolant
  Adding 352
  Checking 298
  Proper Solution 352
  Temperature Gauge 71
Crankcase Emissions Control
  System 416
Cruise Control Indicator 64
Cruise Control Operation 266
Customer Service 422

D

DANGER, Explanation of iii
Dashboard 3, 4, 60, 74
Daytime Running Lights 78
Daytime Running Lights
  Indicator 65
Dead Battery 390
Defects, Reporting Safety 424
Defogger, Rear Window 80
Defrosting the Windows 134, 139
Detachable Anchor 109
Dimensions 408
Dimming the Headlights 76

Dipstick
Automatic Transmission..... 355
Engine Oil..... 298
Directional Signals..... 76
Disc Brake Wear Indicators..... 321
Disposal of Used Oil..... 351
Doors
Auto Door Lock 86
Auto Door Unlock..... 89
Childproof Door Locks 91
Locking and Unlocking..... 85
Power Door Locks..... 85
DOT Tire Quality Grading 410
Driver and Passenger Safety..... 5
Driving 311
Economy 299
Driving Guidelines..... 312
D3 Mode 317
Dual Button 137
Dual Deck Cargo Shelf 117
Dual Temperature Control..... 140
Dust and Pollen Filter 366

E

Economy, Fuel 299
Emergencies..... 381
Battery, Jump Starting 390
Brake System Indicator 396
Changing a Flat Tire 383
Charging System Indicator 394
Checking the Fuses..... 397
Hazard Warning Flashers 79
Jump Starting 390
Low Oil Pressure Indicator 394
Malfunction Indicator Lamp 395
Overheated Engine 392
Towing 403
Emergency Brake..... 81
Emergency Flashers 79
Emergency Towing 403
Emissions Controls..... 416
Emissions Testing 419
Engine
Adding Engine Coolant..... 352
Coolant Temperature Gauge 71
If It Won't Start 388
Malfunction Indicator
Lamp 62, 395
Oil Pressure Indicator..... 62, 394
Oil, What Kind to Use 349
Overheating..... 392
Specifications 408
Speed Limiter..... 318
Starting..... 314
Ethanol in Gasoline 294
Evaporative Emissions Controls.. 416
Exhaust Fumes 55
Expectant Mothers, Use of Seat
Belts by 17

F

Fan, Interior 131, 137
Features 129
Filling the Fuel Tank..... 295
Filters
Dust and Pollen..... 366
Oil 350
Flashers, Hazard Warning..... 79
Flat Tire, Changing a 383
Floor Mats 366

CONTINUED

Index

Fluids
- Automatic Transmission..... 355
- Brake..... 357
- Power Steering..... 358
- Windshield Washer..... 354

Folding Rear Seat 105, 107
Four-way Flashers 79
Front Airbags 10, 25
Front Seat
- Adjusting..... 97, 98
- Heaters..... 111
- Airbags..... 10, 25

Fuel..... 294
- Check Fuel Cap Message..... 296
- Fill Door and Cap..... 295
- Low Fuel Indicator 65
- Gauge 71
- Octane Requirement 294
- Oxygenated 294
- Tank, Refueling 295

Fuel Economy 299
Fuses, Checking the..... 397

G

Gas Mileage, Improving..... 299
Gasoline 294
- Low Fuel Indicator 65
- Gauge 71
- Octane Requirement 294
- Tank, Refueling 295

Gas Station Procedures..... 295
Gauges
- Engine Coolant Temperature 71
- Fuel..... 71

Gearshift Lever Positions
- Automatic Transmission..... 315

Glove Box 120, 121
Gross Vehicle Weight Rating (GVWR) 306, 330

H

Halogen Headlight Bulbs..... 359
HandsFreeLink® 269
Hazard Warning Flashers..... 79
Headlights
- Aiming..... 359
- Daytime Running Lights..... 78
- High Beam Indicator..... 65
- Reminder Chime..... 77
- Replacing Halogen Bulbs 359
- Turning on..... 76

Head Restraints 101
Heated Mirrors 115
Heater, Seat..... 111
Heating and Cooling..... 130
High Beam Lever..... 76
Hood, Opening the 297
Horn..... 4, 74

I

Identification Number, Vehicle.... 406
Ignition
- Keys..... 82
- Switch..... 84
- Timing Control System..... 417

Immobilizer System..... 83
Important Safety Precautions 6
Interior Care..... 379

Indicators
ABS (Anti-Lock Brake)..... 63, 322
Brake (Parking and Brake System) 62, 396
Charging System 62, 394
Cruise Control..... 64
DRL (Daytime Running Lights)..... 65
High Beam..... 65
Key (Immobilizer System) 63
Low Fuel 65
Low Oil Pressure 62, 394
Low Tire Pressure..... 66, 326
Maintenance Minder™..... 67, 341
Malfunction Indicator Lamp 62, 395
Passenger Airbag Off..... 33
Side Airbag Off 63
SRS 63
TPMS 66, 326
Turn Signal and Hazard Warning 76, 79
VSA Off..... 64, 325
VSA (Vehicle Stability Assist) System 64, 324
Washer Level 67
Indicators, Instrument Panel..... 62
Infant Restraint 40
Infant Seats..... 40
Tether Anchorage Point 49
Inflation, Proper Tire 370
Recommended Pressures..... 371
Inside Mirror 114
Inspection, Tire 372
Installing a Child Seat 43
Instrument Panel 61
Instrument Panel Brightness 79
Instruments and Controls..... 59
Interior Lights 126
Introduction i
iPod..... 177, 235

J

Jacking up the Vehicle 384
Jack, Tire 383
Jump Starting 390

K

Keys..... 82

L

Label, Certification 406
Lane Change, Signaling 76
Lap/Shoulder Belts 15, 20
LATCH Anchorage System..... 44
Lights
Bulb Replacement 359
Indicator..... 62
Parking..... 76
Turn Signal 76
Load Limits..... 305
LOCK (Ignition Key Position) 84
Locks
Anti-theft Steering Column 84
Childproof Door..... 91
Fuel Fill Door 295
Glove Box 120, 121
Power Door 85
Tailgate 95
Low Coolant Level..... 298
Low Fuel Indicator 65
Low Oil Pressure Indicator 62, 394
Lower Anchors..... 44

CONTINUED

Index

Lubricant Specifications Chart 408
Luggage, Storing (Cargo) 304
Luggage Net (Cargo Net) 309

M

Maintenance..... 339
Minder 341-347
Main Items and Sub Items 347
Owner's Maintenance Checks 346
Minder Indicator..... 67
Safety..... 340
Malfunction Indicator Lamp .. 62, 395
Meters, Gauges..... 61, 68
Methanol in Gasoline 294
Mirrors, Adjusting 114
Modifying Your Vehicle..... 303
Moonroof 113
MP3 ..... 150, 167, 207

N

Neutral Gear Position..... 317
New Vehicle Break-in 294
NOTICE, Explanation of..... i
Numbers, Identification..... 406

O

Octane Requirement, Gasoline.... 294
Odometer..... 71
Off-Highway Driving..... 336
Oil
Change, How to 350
Change, When to 341
Checking Engine 298
Pressure Indicator..... 62, 394
Selecting Proper Viscosity Chart 349
ON (Ignition Key Position) 84
Onboard Refueling Vapor Recovery 416
Outside Mirrors 115
Outside Temperature Indicator..... 71
Overheating, Engine 392
Owner's Maintenance Checks..... 346
Oxygenated Fuels..... 294

P

Panel Brightness Control 79
Park Gear Position..... 316
Parking..... 320
Parking Brake 81
Parking Brake and Brake System Indicator..... 62, 396
Parking Lights..... 76
Parking Over Things that Burn... 320
Passenger Airbag Off Indicator..... 33
PC card..... 222
PC card Error Messages 234
PGM-FI System..... 417
Pollen Filter 366
Power Door Locks..... 85
Power Seats 97
Power Socket Locations..... 123
Power Steering Fluid..... 358
Power Windows 112
Pregnancy, Using Seat Belts..... 17
Preparing to Drive 313
Protecting Adults and Teens..... 12
Additional Safety Precautions.... 18
Advice for Pregnant Women..... 17

Protecting Children 35
Protecting Infants 40
Protecting Larger Children 51
Protecting Small Children 41
Using Child Seats with Tethers 49
Using LATCH 44
Protecting Your Discs 252

R

Radiator Overheating 392
Radio/Disc Sound System 145, 157, 194
Radio Theft Protection 258
Readiness Codes 419
Rear Differential Fluid 357
Rear Lights, Bulb Replacement ... 362
Rear Seat, Folding 105, 107
Rear View Mirror 114
Rear Window Defogger 80
Rear Window Wiper and Washer .. 76
Reclining the Seat Backs 97, 98, 99
Refueling 295
Reminder Indicators 62
Remote Transmitter 92
Replacement Information
Dust and Pollen Filter 366
Engine Oil and Filter 350
Fuses 397
Light Bulbs 359
Schedule 341
Tires 374
Wiper Blades 367
Replacing Seat Belts After a Crash 22
Reporting Safety Defects 424
Reserve Tank, Engine Coolant 298, 352
Restraint, Child 35
Reverse Gear Position 316
Roof Rack 307
Rotation, Tire 373

S

Safety Belts 9, 19
Safety Defects, Reporting 424
Safety Features 8
Airbags 10
Seat Belts 9
Safety Labels, Location of 56
Safety Messages iii
Seat Belts 9, 15
Additional Information 19
Advice for Pregnant Women 17
Automatic Seat Belt Tensioners 21
Cleaning 365
Detachable Anchor 109
Lap/Shoulder Belt 15, 20
Maintenance 22
Reminder Indicator and Beeper 19, 62
System Components 19
Use During Pregnancy 17
Wearing a Lap/Shoulder Belt 15
Seat Heaters 111
Seat Power Adjustment 97
Seats, Adjusting the 97-99
Select/Reset Knob 68
Serial Number 406
Service Intervals 341
Service Manual* 425
Service Station Procedures 295
Setting the Clock 259

CONTINUED

Index

Shift Lever Position Indicators 315
Shift Lock Release 319
Side Airbags 10, 29
How Your Side Airbags Work.... 29
How the Side Airbag Off Indicator Works 32
Side Curtain Airbags 10, 31
How Your Side Curtain Airbags Work..... 31
Side Marker Lights, Bulb Replacement..... 361, 362
Signaling Turns..... 76
Snow Tires..... 375
Sound System..... 143
Spare Tire 382
Spark Plugs..... 408
Specifications 408, 409
Speed Control..... 266
Speed Limiter 318
SRS, Additional Information..... 23
Additional Safety Precautions.... 34
Airbag Service 34
Airbag System Components..... 23
How the Side Airbag Off Indicator Works 32
How the SRS Indicator Works ... 32
How Your Front Airbags Work..... 25
How Your Side Airbags Work.... 29
How Your Side Curtain Airbags Work..... 31
SRS Indicator..... 32, 63
START (Ignition Key Position) 84
Starting the Engine..... 314
In Cold Weather at High Altitude 314
With a Dead Battery 390
Steam Coming from Engine..... 392
Steering Wheel
Adjustment 81
Anti-theft Column Lock 84
Steering Wheel
Buttons 255, 266, 269
Stereo Sound System 143
Storing Your Vehicle 378
Sun Visor..... 122
Sunglasses Holder 122
Supplemental Restraint System..... 10, 23
Servicing 34
SRS Indicator..... 32, 63
System Components..... 23
Synthetic Oil..... 350

T

Table
Center 120
Tailgate
Open Indicator 65
Opening the..... 95
Taillights, Changing Bulbs..... 362
Taking Care of the Unexpected .. 381
Technical Descriptions
DOT Tire Quality Grading* 410
Emissions Control Systems..... 416
Oxygenated Fuels..... 294
Three Way Catalytic Converter..... 418
Tire Pressure Monitoring System (TPMS) — Required Federal Explanation..... 414
Temperature Gauge 71
Temperature, Outside..... 71
Tether Anchorage Points 49
Theft Protection, Radio..... 258
Three Way Catalytic Converter... 418
Tilt the Steering Wheel..... 81

Time, Setting the 259
Tire Chains 375
Tire, How to Change a Flat 383
Tire Information 410
Tires 370
  Air Pressure 371
  Chains 375
  Checking Wear 372
  DOT Tire Quality Grading 410
  Inflation 370
  Inspection 372
  Labeling 412
  Low Tire Pressure
    Indicator..... 66, 326
  Maintenance..... 373
  Pressure Monitoring System ... 326
  Replacing 374
  Rotating..... 373
  Snow 375
  Specifications 409
Tools, Tire Changing 383
Towing
  A Trailer..... 329
  Behind a Motorhome 334
  Emergency Wrecker 403
  Equipment and Accessories..... 331
  Pre-Tow Checklist 332
  Weight Limit 329
TPMS (Tire Pressure Monitoring
    System) 326
  Indicator..... 66, 327
  Required Federal
    Explanation..... 414
Trailer Loading 329, 330
Trailer Towing Tips..... 333
Transmission
  Checking Fluid Level,
    Automatic 355
  Fluid Selection..... 355
  Identification Number..... 407
  Shifting the Automatic..... 315
Treadwear 372
Trip Meter 69
Turn Signals 76

U

Unexpected, Taking Care
  of the 381
Uniform Tire Quality Grading 410
Unleaded Gasoline..... 294
USB Adapter
  Cable 179, 186, 237, 245
USB Flash Memory Device.. 184, 242
Used Oil, How to Dispose of 351

V

Vehicle Capacity Load 305
Vehicle Dimensions..... 408
Vehicle Identification Number..... 406
Vehicle Stability Assist (VSA)
    System..... 324
  Indicators 64
Vehicle Storage 378
Ventilation 132, 138
VIN 406
Viscosity, Oil..... 349
Voice Control System..... 136, 195

W

WARNING, Explanation of iii
Warning Labels, Location of 56
Warranty Coverages 423

CONTINUED

Index

Washers, Windshield
Checking the Fluid Level 354
Operation 75
Wheels
Adjusting the Steering 81
Alignment and Balance..... 373
Wrench, Nut..... 384
Windows
Auto Reverse..... 112
Operating the Power..... 112
Rear, Defogger 80
Windshield
Cleaning 75
Defroster 134, 139
Washers 75
Wipers, Windshield
Changing Blades..... 367
Operation 75
WMA..... 150, 167, 207
Worn Tires 372
Wrecker, Emergency Towing..... 403

X

XM® Satellite Radio..... 161, 200

* : U.S. only

Main Menu

Main Menu

Main Menu

Service Information Summary

Gasoline:
Unleaded gasoline, pump octane number of 87 or higher.

Fuel Tank Capacity:
15.3 US gal (58 ℓ)

Recommended Engine Oil:
API Premium grade 0W-20 detergent oil (see page 349).

Oil change capacity (including filter):
4.4 US qt (4.2 ℓ)

Automatic Transmission Fluid:
Honda ATF DW-1 (automatic transmission fluid) (see page 355).

On 4WD model only
Rear Differential Fluid:
Honda Dual Pump Fluid II. Do not use ATF.

Capacity:
1.3 US qt (1.2 ℓ)

Power Steering Fluid:
Honda Power Steering Fluid preferred, or another brand of power steering fluid as a temporary replacement. Do not use ATF (see page 358).

Brake Fluid:
Honda Heavy Duty Brake Fluid DOT 3 preferred, or a DOT 3 or DOT 4 brake fluid as a temporary replacement (see page 357).

Tire Pressure (measured cold):
Front/Rear:
30 psi (210 kPa , 2.1 kgf/cm^2)

Compact Spare Tire:
60 psi (420 kPa , 4.2 kgf/cm^2)