Zoom-Zoom

All children instinctively know it.

A few adults still remember it.

One unique car company refuses to outgrow it.

In grown-up language, it means the exhilaration and

liberation that come from experiencing sheer motion.

But as usual, children put it much better and simply call it " Go Zoom-Zoom."

We practice it every day.

It's why we build the kind of cars we do.

Zoom-Zoom.

Can we re-awaken it in you today?

A Word to Mazda Owners

Thank you for choosing a Mazda. We at Mazda design and build vehicles with complete customer satisfaction in mind.

To help ensure enjoyable and trouble-free operation of your Mazda, read this manual carefully and follow its recommendations.

An Authorized Mazda Dealer knows your vehicle best. So when maintenance or service is necessary, that's the place to go.

Our nationwide network of Mazda professionals is dedicated to providing you with the best possible service.

We assure you that all of us at Mazda have an ongoing interest in your motoring pleasure and in your full satisfaction with your Mazda product.

Mazda Motor Corporation
HIROSHIMA, JAPAN

Important Notes About This Manual
Keep this manual in the glove compartment as a handy reference for the safe and enjoyable use of your Mazda. Should you resell the vehicle, leave this manual with it for the next owner.

All specifications and descriptions are accurate at the time of printing. Because improvement is a constant goal at Mazda, we reserve the right to make changes in specifications at any time without notice and without obligation.

Air Conditioner and the Environment
Your Mazda's genuine air conditioner is filled with a refrigerant that has been found not to damage the earth's ozone layer. If the air conditioner does not operate properly, consult an Authorized Mazda Dealer.
Perchlorate
Certain components of this vehicle such as [air bag modules, seat belt pretensioners, lithium batteries,…] may contain Perchlorate Material-- Special handling may apply for service or vehicle end of life disposal. See www.dtsc.ca.gov/hazardouswaste/perchlorate.

Please be aware that this manual applies to all models, equipment and options. As a result, you may find some explanations for equipment not installed on your vehicle.

©2018 Mazda Motor Corporation
February 2018 (Print1)

How to Use This Manual

We want to help you get the most driving pleasure from your vehicle. Your owner's manual, when read from cover to cover, can do that in many ways.

Illustrations complement the words of the manual to best explain how to enjoy your Mazda. By reading your manual, you can find out about the features, important safety information, and driving under various road conditions.

The symbol below in this manual means “Do not do this” or “Do not let this happen”.

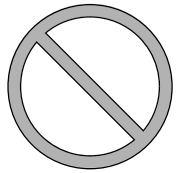

Index: A good place to start is the Index, an alphabetical listing of all information in your manual.

You'll find several WARNINGs, CAUTIONs, and NOTEs in the manual.

WARNING

A WARNING indicates a situation in which serious injury or death could result if the warning is ignored.

CAUTION

A CAUTION indicates a situation in which bodily injury or damage to your vehicle, or both, could result if the caution is ignored.

NOTE
A NOTE provides information and sometimes suggests how to make better use of your vehicle.

The following symbol, located on some parts of the vehicle, indicates that this manual contains information related to the part.
Please refer to the manual for a detailed explanation.

Table of Contents

Pictorial Index 1
Interior, exterior views and part identification of your Mazda.

Essential Safety Equipment 2
Important information about safety equipment, including seats, seat belt system, child-restraint systems and SRS air bags.

Before Driving 3
Use of various features, including keys, doors, mirrors and windows.

When Driving 4
Information concerning safe driving and stopping.

Interior Features 5
Use of various features for ride comfort, including air-conditioning and audio system.

Maintenance and Care 6
How to keep your Mazda in top condition.

If Trouble Arises 7
Helpful information on what to do if a problem arises with the vehicle.

Customer Information and Reporting Safety Defects 8
Important consumer information including warranties and add-on equipment.

Specifications 9
Technical information about your Mazda.

Index 10

1 Pictorial Index

Interior, exterior views and part identification of your Mazda.

Interior Overview.....1-2
Interior Equipment (View A).....1-2
Interior Equipment (View B).....1-3
Interior Equipment (View C).....1-4
Interior Equipment (View D).....1-5

Exterior Overview.....1-6

Interior Overview

Interior Equipment (View A)

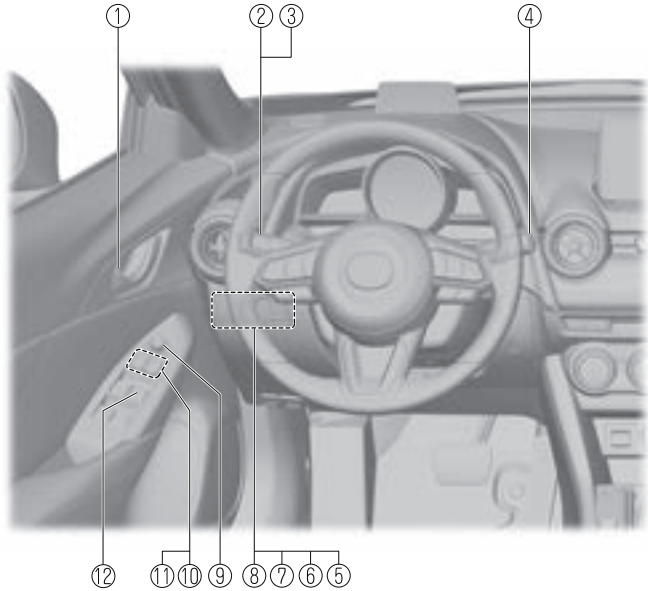

① Door-lock knob..... page 3-18
② Turn and lane-change signal.....page 4-48
③ Lighting control.....page 4-43
④ Wiper and washer lever.....page 4-49
⑤ TCS OFF switch.....page 4-69
⑥ Lane Departure Warning System (LDWS) switch.....page 4-87
⑦ Smart City Brake Support (SCBS) OFF switch.....page 4-121, 4-126
⑧ Blind Spot Monitoring (BSM) OFF switch..... page 4-95
⑨ Outside mirror switch.....page 3-31
⑩ Door-lock switch.....page 3-16
⑪ Power window lock switch..... page 3-34
⑫ Power window switches.....page 3-34

 The equipment and installation position varies by vehicle

Interior Equipment (View B)

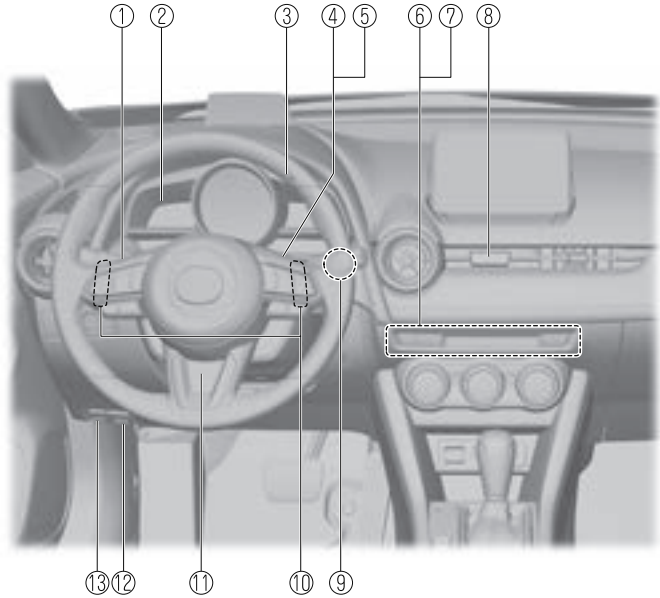

① Audio control switches.....page 5-16
② Instrument cluster.....page 4-11
③ Dashboard illumination knob.....page 4-17
④ Mazda Radar Cruise Control with Stop & Go function (MRCC with Stop & Go function) switches.....page 4-110
⑤ Cruise control switches.....page 4-140
⑥ Seat warmer switches.....page 2-6
⑦ Heated steering wheel switch.....page 3-29
⑧ Hazard warning flasher switch.....page 4-55
⑨ Push button start.....page 4-4
⑩ Steering shift switches.....page 4-36
⑪ Lock release lever.....page 3-29
⑫ Hood release handle.....page 6-19
⑬ Remote fuel-filler lid release.....page 3-27

The equipment and installation position varies by vehicle

Interior Overview

Interior Equipment (View C)

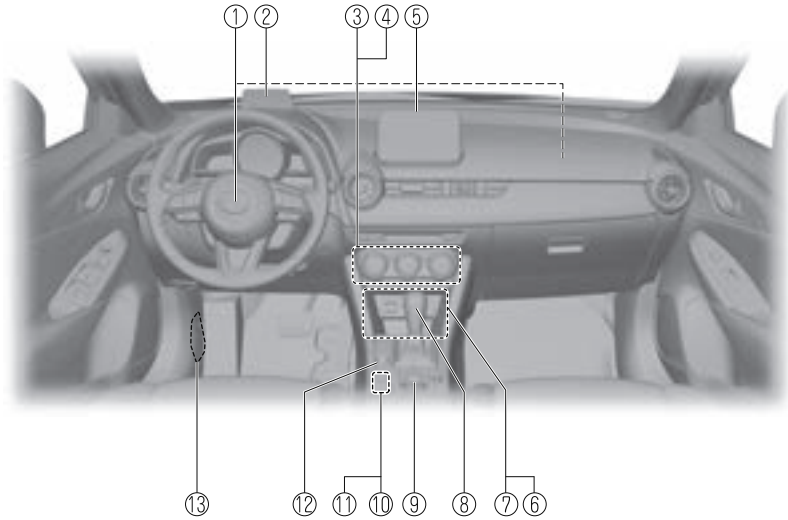

① SRS air bags..... page 2-45
② Active driving display..... page 4-21
③ Climate control system.....page 5-4
④ Rear window defogger switch.....page 4-53
⑤ Audio system..... page 5-20, 5-64
⑥ Accessory socket..... page 5-128
⑦ External input terminal.....page 5-17
⑧ Shift lever/Selector lever..... page 4-30, 4-32
⑨ Commander switch.....page 5-64
⑩ Electric parking brake (EPB) switch.....page 4-57
⑪ AUTOHOLD switch..... page 4-63
⑫ Drive selection switch..... page 4-73
⑬ Fuse block (Left side).....page 6-48

 The equipment and installation position varies by vehicle

Interior Equipment (View D)

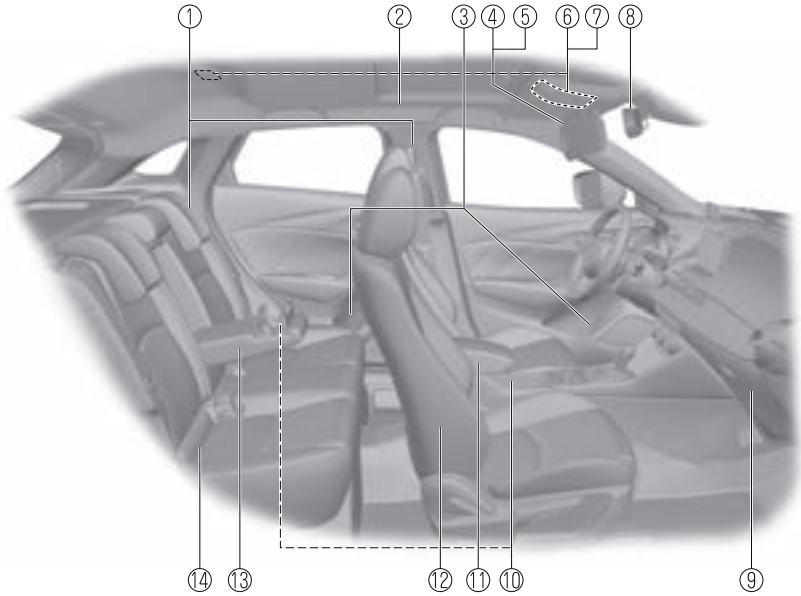

① Seat belts..... page 2-15
② SRS air bag.....page 2-45
③ Bottle holders.....page 5-131
④ Sunvisor..... page 5-126
⑤ Vanity mirror..... page 5-126
⑥ Overhead lights.....page 5-126
⑦ Moonroof switch..... page 3-36
⑧ Rearview mirror..... page 3-32
⑨ Glove compartment..... page 5-132
⑩ Cup holders.....page 5-129
⑪ Center console..... page 5-132
⑫ Front seat.....page 2-5
⑬ Armrest.....page 2-11
⑭ Rear seat..... page 2-9

Exterior Overview

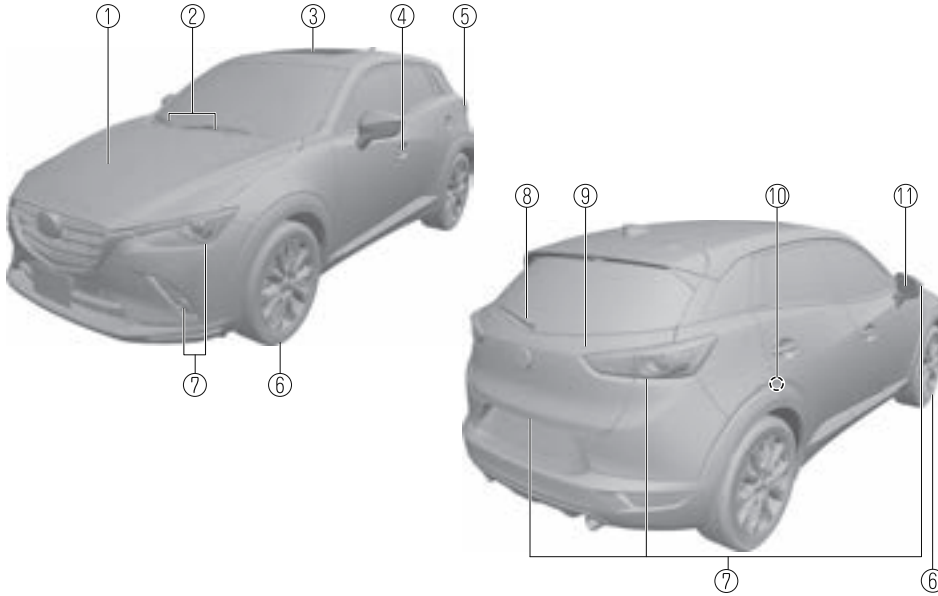

① Hood.....page 6-19
② Windshield wiper blades.....page 6-29
③ Moonroof.....page 3-36
④ Door and key.....page 3-11
⑤ Fuel-filler lid.....page 3-27
⑥ Wheels and Tires.....page 6-36
⑦ Exterior lights.....page 6-41
⑧ Rear window wiper blade.....page 6-30
⑨ Liftgate.....page 3-21
⑩ Child safety lock.....page 3-19
⑪ Outside mirror.....page 3-31

2 Essential Safety Equipment

Important information about safety equipment, including seats, seat belt system, child-restraint systems and SRS air bags.

Seats.....2-2
Seat Precautions.....2-2
Front Seat.....2-5
Rear Seat.....2-9
Head Restraints.....2-12

Seat Belt Systems.....2-15
Seat Belt Precautions.....2-15
Seat Belt.....2-18
Seat Belt Warning Systems.....2-19
Front Seat Belt Pretensioner and Load Limiting Systems.....2-19
Seat Belt Extender.....2-21

Child Restraint.....2-23
Child-Restraint Precautions.....2-23
Child-Restraint System Installation.....2-28
Child-Restraint System Suitability for Various Seat Positions Table.....2-30
Installing Child-Restraint Systems.....2-33

SRS Air Bags.....2-45
Supplemental Restraint System (SRS) Precautions.....2-45
Supplemental Restraint System Components.....2-52
How the SRS Air Bags Work.....2-54
SRS Air Bag Deployment Criteria.....2-58
Limitations to SRS Air Bag.....2-59
Front Passenger Occupant Classification System*.....2-61
Constant Monitoring.....2-65

*Some models.

Seat Precautions

WARNING

Make sure the adjustable components of a seat are locked in place:
Adjustable seats and seatbacks that are not securely locked are dangerous. In a sudden stop or collision, the seat or seatback could move, causing injury. Make sure the adjustable components of the seat are locked in place by attempting to slide the seat forward and backward and rocking the seatback.

Never allow children to adjust a seat:
Allowing children to adjust a seat is dangerous as it could result in serious injury if a child's hands or feet become caught in the seat.

Do not drive with the seatback unlocked:
All of the seatbacks play an important role in your protection in a vehicle. Leaving the seatback unlocked is dangerous as it can allow passengers to be ejected or thrown around and baggage to strike occupants in a sudden stop or collision, resulting in severe injury. After adjusting the seatback at any time, even when there are no other passengers, rock the seatback to make sure it is locked in place.

Adjust a seat only when the vehicle is stopped:
If the seat is adjusted while the vehicle is being driven, the seating posture may become unstable and the seat could move unexpectedly resulting in injury.

Do not modify or replace the front seats:
Modifying or replacing the front seats such as replacing the upholstery or loosening any bolts is dangerous. The front seats contain air bag components essential to the supplemental restraint system. Such modifications could damage the supplemental restraint system and result in serious injury. Consult an Authorized Mazda Dealer if there is any need to remove or reinstall the front seats.

Do not drive with damaged front seats:
Driving with damaged front seats, such as seat cushions torn or damaged down to the urethane, is dangerous. A collision, even one not strong enough to inflate the air bags, could damage the front seats which contain essential air bag components. If there was a subsequent collision, an air bag may not deploy which could lead to injuries. Always have an Authorized Mazda Dealer inspect the front seats, front seat belt pretensioners and air bags after a collision.

Do not drive with either front seats reclined:
Sitting in a reclined position while the vehicle is moving is dangerous because you do not get the full protection from seat belts. During sudden braking or a collision, you can slide under the lap belt and suffer serious internal injuries. For maximum protection, sit well back and upright.

Do not place an object such as a cushion between the seatback and your back:
Putting an object such as a cushion between the seatback and your back is dangerous because you will be unable to maintain a safe driving posture and the seat belt cannot function at its full capacity in a collision, which could result in a serious accident, injury or death.

Do not place objects under the seat:
The object could get stuck and cause the seat to not be fixed securely, and result in an accident.

Do not stack cargo higher than the seatbacks:
Stacking luggage or other cargo higher than the seatbacks is dangerous. During sudden braking or a collision, objects can fly around and become projectiles that may hit and injure passengers.

Make sure luggage and cargo is secured before driving:
Not securing cargo while driving is dangerous as it could move or be crushed during sudden braking or a collision and cause injury.

Never allow a passenger to sit or stand on the folded seatback while the vehicle is moving:
Driving with a passenger on the folded seatback is dangerous. Allowing a child to sit up on the folded seatback while the vehicle is moving is particularly dangerous. In a sudden stop or even a minor collision, a child not in a proper seat or child-restraint system and seat belt could be thrown forward, back or even out of the vehicle resulting in serious injuries or death. The child in the baggage area could be thrown into other occupants and cause serious injury.

⚠ CAUTION

- *When operating a seat, be careful not to put your hands or fingers near the moving parts of the seat or on the side trim to prevent injury.*
- *When moving the seats, make sure there is no cargo in the surrounding area. If the cargo gets caught it could damage the cargo.*

➢ ***(Manual Seat)***
When moving the seats forward and rearward or returning a rear-reclined seatback to its upright position, make sure you hold onto the seatback with your hand while operating. If the seatback is not held, the seat will move suddenly and could cause injury.

NOTE

- *When returning a rear seat to its original position, place the seat belt in its normal position. Verify that the seat belt pulls out and retracts.*
- ***(Power Seat)***
  The seat-bottom power adjustment is operated by motors. Avoid extended operation because excessive use can damage the motors.
  - *To prevent the battery from running down, avoid using the power adjustment when the engine is stopped. The adjuster uses a large amount of electrical power.*
  - *Do not use the switch to make more than one adjustment at a time.*
- *When getting in and out of the vehicle, your foot could accidentally contact the seat height adjustment lever and cause the seat to lower.*
  Adjust the seat to obtain the correct driving position.

Front Seat

▼ Seat Operation

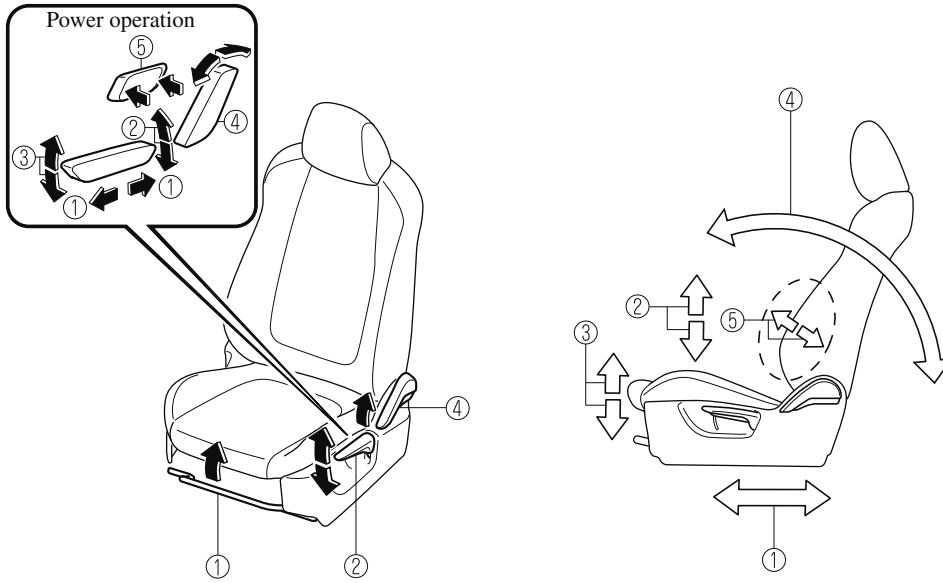

① **Seat Slide**
(Manual Seat)
To move a seat forward or backward, raise the lever and slide the seat to the desired position and release the lever.
Make sure the lever returns to its original position and the seat is locked in place by attempting to push it forward and backward.
(Power Seat)
To slide the seat, move the slide lifter switch on the outside of the seat to the front or back and hold it. Release the switch at the desired position.
② **Height Adjustment***
(Manual Seat)
To adjust the seat height, move the lever up or down.
(Power Seat)
To adjust the seat height, move the switch up or down.
③ **Height Adjustment for Front Edge of Seat Bottom (Driver's Power Seat)**
To adjust the front height of the seat bottom, raise or lower the front of the slide lifter switch.

*Some models.

④ **Seat Recline**
(Manual Seat)
To change the seatback angle, lean forward slightly while raising the lever. Then lean back to the desired position and release the lever.
Make sure the lever returns to its original position and the seatback is locked in place by attempting to push it forward and backward.
(Power Seat)
To change the seatback angle, press the front or rear side of the reclining switch. Release the switch at the desired position.
⑤ **Lumbar Support Adjustment (Driver's Power Seat)**
To increase the seat firmness, press and hold the front part of the switch to the desired position, then release it.
Press the rear part of the switch to decrease firmness.

▼ Seat Warmer*

The front seats are electrically heated. The ignition must be switched ON.
Press the seat warmer switch while the ignition is switched ON to operate the seat warmer. The indicator lights turn on to indicate that the seat warmer is operating.
The mode changes as follows each time the seat warmer switch is pressed.

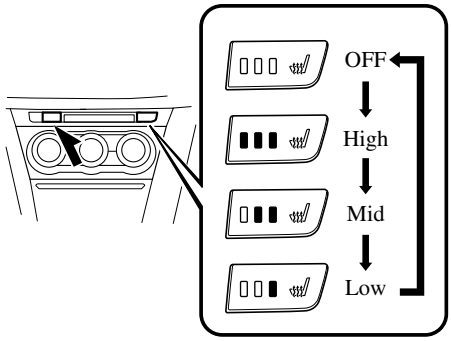

WARNING

Be careful when using the seat warmer:
The heat from the seat warmer may be too hot for some people, as indicated as follows, and could cause a low-temperature burn.

- *Infants, small children, elderly people, and physically challenged people*
- *People with delicate skin*
- *People who are excessively fatigued*
- *People who are intoxicated*
- *People who have taken sleep-inducing medicine such as sleeping pills or cold medicine*

Do not use the seat warmer with anything having high moisture-retention ability such as a blanket or cushion on the seat:
The seat may be heated excessively and cause a low-temperature burn.

*Some models.

Do not use the seat warmer even when taking a short nap in the vehicle:
The seat may be heated excessively and cause a low-temperature burn.

Do not place heavy objects with sharp projections on the seat, or insert needles or pins into it:
This could cause the seat to become excessively heated and result in injury from a minor burn.

CAUTION

Do not use organic solvents to clean the seat. It may damage the seat surface and the heater.

NOTE

- *If the ignition is switched off while the seat warmer is operating (High, Mid or Low) and then switched ON again, the seat warmer will automatically operate at the temperature set before switching off the ignition.*
- *Use the seat warmer when the engine is running. Leaving the seat warmer on for long periods with the engine not running could cause the battery power to be depleted.*
- *The temperature of the seat warmer cannot be adjusted beyond High, Mid and Low because the seat warmer is controlled by a thermostat.*

▼ Driving Position Memory*

The desired driving position can be called up after programming the position.
The following driving positions can be programmed.

- Driver's seat position (seat slide, height adjustment, front edge of seat bottom, seat recline)
  Refer to Seat Operation on page 2-5.
- Active driving display (display position, brightness level, display information)
  Refer to Active Driving Display on page 4-21.

CAUTION

Do not place fingers or hands around the bottom of the seat while the seat memory function is operating. The seat moves automatically while the seat memory function is operating and fingers or hands could get pinched and injured.

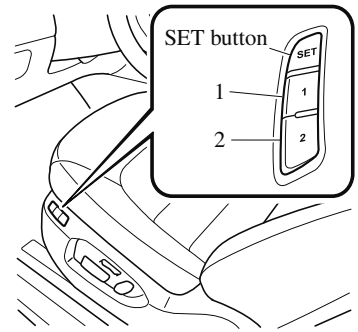

A driving position can be programmed or operated using the buttons on the side of the seat or the key.

*Some models.

NOTE

- *Lumbar support adjustment cannot be programmed.*
- *A driving position can be programmed to the buttons on the side of the seat and the key in use for driving the vehicle.*
- *If the vehicle has been serviced and the battery cables disconnected, the programmed seat positions will have been erased. Re-program the seat positions.*

Programming

1. Make sure the parking brake is on.
2. Make sure the selector lever is in the P position.
3. Start the engine.
4. Adjust the seat and the active driving display to the desired driving position.
5. Press the SET button on the seat until a beep sound is heard 1 time.
6. Perform 1 of the following settings within 5 seconds of completing step 5 above:
   - **Programming using a button on the side of the seat**
     Press the button you want to program, either button 1 or 2, until a beep sound is heard 1 time.
   - **Programming using the key**
     Press the key button until a beep sound is heard 1 time.

NOTE
If a beep sound is heard 3 times, the operation is canceled.

To move the driving position to a programmed position

(Using a button on the side of the seat)

1. Make sure the parking brake is on.
2. Make sure the selector lever is in the P position.
3. Start the engine.
4. Press the programming button for the driving position you want to call up (button 1 or 2).
5. A beep sound is heard when the driving position adjustment is completed.

NOTE

- *If the driving position movement is not changed, only the beep sounds.*
- *A seat position can be called up even with the engine not running.*
- *The driving position adjustment is canceled in the following cases:*
  - *Any of the seat adjustment switches is operated.*
  - *The SET button is pressed.*
  - *Programming button 1 or 2 is pressed.*
  - *The key button or button is operated.*
  - *The vehicle starts moving.*
  - *The active driving display is adjusted.*

(Using a programmed key)

1. Unlock the doors by pressing a request switch or the key button.
2. After unlocking the doors, the seat position adjustment begins within 40 seconds of opening the driver's door, and a beep sounds when the operation is finished.
3. Make sure the parking brake is on.

4. Make sure the selector lever is in the P position.
5. Start the engine.
6. The active driving display adjustment begins.

NOTE

- *If there is no driving position movement, a beep is not heard.*
- *The driving position adjustment is canceled in the following cases:*
  - *Any of the seat adjustment switches is operated.*
  - *The SET button is pressed.*
  - *Programming button 1 or 2 is pressed.*
  - *The key 🔒 button or 🔓 button is operated.*
  - *The vehicle starts moving.*
  - *The active driving display is adjusted.*

Erasing programmed driving positions

(Erasing the driving positions programmed to the key)

1. Switch the ignition OFF.
2. Press the SET button on the side of the seat until a beep sound is heard 1 time.
3. After the beep sounds, press the key 🔒 button within 5 seconds until a beep sound is heard 1 time.

NOTE
If a beep sound is heard 3 times, the operation is canceled.

Rear Seat

▼ Split Folding the Seatbacks

By lowering the rear seatbacks the luggage compartment space can be expanded.

⚠ WARNING

Do not drive the vehicle with occupants on folded down seatbacks or in the luggage compartment.
Putting occupants in the luggage compartment is dangerous because seat belts cannot be fastened which could lead to serious injury or death during sudden braking or a collision.

Do not allow children to play inside the vehicle with the seatbacks lowered.
Allowing children to play in the vehicle with the seatbacks folded down is dangerous. If a child enters the luggage compartment and the seatbacks were raised back up, the child may become trapped in the luggage compartment which could lead to an accident.

Tightly secure cargo in the luggage compartment when it is transported with the seatbacks folded down.
Driving without tightly securing cargo and luggage is dangerous as it could move and become an obstruction to driving during emergency braking or a collision resulting in an unexpected accident.

When transporting cargo, do not allow the cargo to exceed the height of the seatbacks.
Transporting cargo stacked higher than the seatbacks is dangerous as visibility to the rear and sides of the vehicle is reduced which could interfere with driving operations and lead to an accident.

Lowering the seatbacks

CAUTION

- *When folding the seatback forward, always support the seatback with your hand. If it is not supported by a hand, fingers or the hand pressing the push knob could be injured.*
- *Check the position of a front seat before folding a rear seatback.*
  Depending on the position of a front seat, it may not be possible to fold a rear seatback all the way down because it may hit the seatback of the front seat which could scratch or damage the front seat or its pocket. Remove the head restraint on the rear outboard seat if necessary.
- *Before folding a rear seatback, make sure that the armrest is stored. If a seatback is lowered without storing the armrest, it could deform, damage, or scratch the armrest.*

1. Lower the head restraint all the way down.
   Refer to Head Restraints on page 2-12.
2. Press the push knob to fold down the seatback.

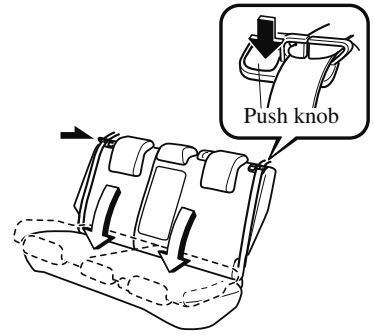

To return the seatback to its upright position:

WARNING

When returning a seatback to its upright position, make sure the 3-point seat belt is not caught in the seatback and the 3-point seat belt is not twisted.
If the seat belt is used while it is twisted and caught in the seatback, the seat belt cannot function at its full capacity, which could cause serious injury or death.

When returning a seatback to its upright position, make sure that it is firmly locked and the red indication is not visible.
If the red indication is visible behind the push knob, it means the seatback is not locked. If the vehicle is driven without the seatback locked, it could fold down suddenly and cause an accident.

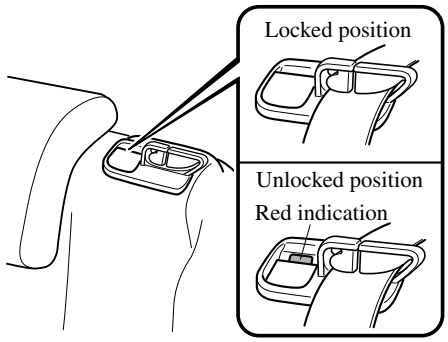

1. Make sure that the seat belt passes through the seat belt guide correctly and it is not twisted, then raise the seatback while preventing the seat belt from being caught in the seatback.

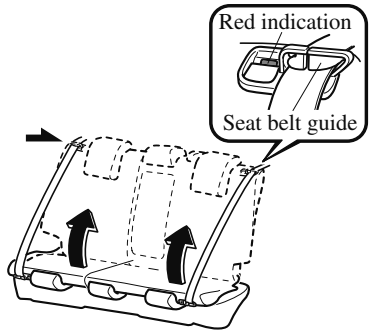

2. Press the seatback rearward and lock it in place. After returning the seatback to its upright position, make sure it is securely locked.

▼ Armrest*

The rear armrest in the center of the rear seatback can be used (no occupant in the center seat) or placed upright.

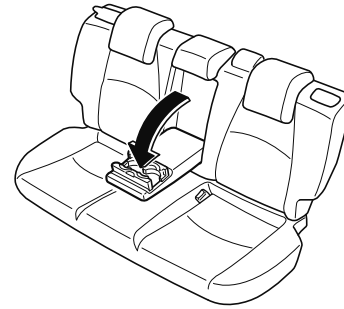

⚠ WARNING

Never position the shoulder portion of a seat belt over the armrest:
Positioning the shoulder portion of a rear seat belt over the armrest is dangerous as it cannot provide adequate protection in a collision and could result in serious injuries.

Never put your hands and fingers around the moving parts of the seat and armrest:
Putting your hands and fingers around the moving parts of the seat and armrest is dangerous as they could get injured.

⚠ CAUTION

➢ *Be careful not to apply excessive force to the armrest such as by sitting on it. Otherwise, it could be deformed or damaged.*

*Some models.

➢ *When storing the armrest, return the cup holder to its original position. If the armrest is stored without returning the cup holder to its original position, the cup holder could be deformed or damaged.*

Head Restraints

Your vehicle is equipped with head restraints on all outboard seats and the rear center seat. The head restraints are intended to help protect you and the passengers from neck injury.

⚠ WARNING

Always drive with the head restraints installed when seats are being used and make sure they are properly adjusted. In addition, always raise the head restraints on all rear seats when they are being used:
Driving with the head restraints adjusted too low or removed is dangerous. With no support behind your head, your neck could be seriously injured in a collision.

▼ Height Adjustment

Adjust the head restraint so that the center is even with the top of the passenger's ears.

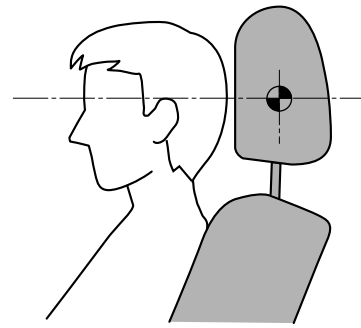

To raise a head restraint, pull it up to the desired position.
To lower the head restraint, press the stop-catch release, then push the head restraint down.

Front outboard seat

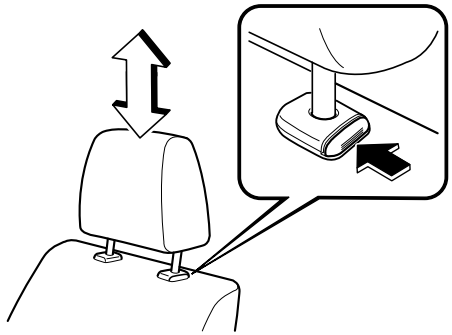

Rear outboard seat

Except Mexico

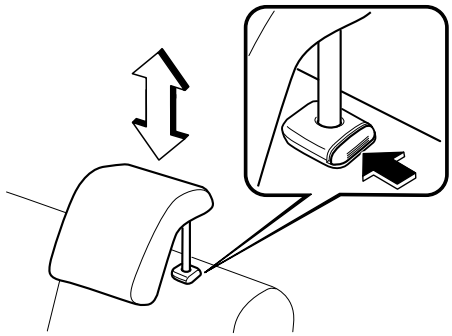

Mexico

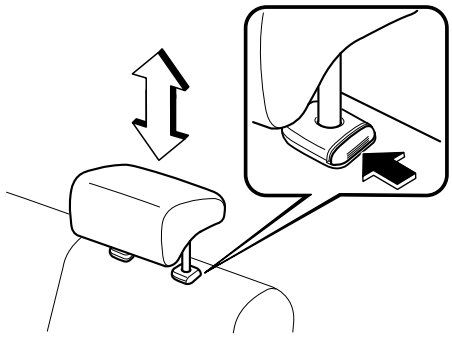

Rear center seat

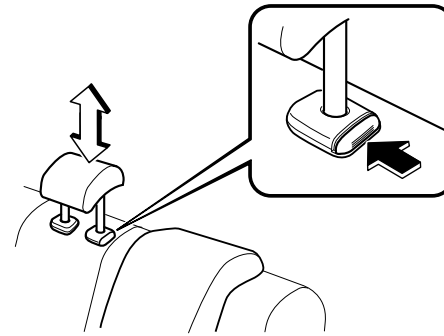

▼ Removal/Installation

To remove the head restraint, pull it up while pressing the stop-catch.
To install the head restraint, insert the legs into the holes while pressing the stop-catch.

WARNING

Always drive with the head restraints installed when seats are being used and make sure they are properly installed:
Driving with the head restraints not installed is dangerous. With no support behind your head, your neck could be seriously injured in a collision.

After installing a head restraint, try lifting it to make sure that it does not pull out:
Driving with an unsecured head restraint is dangerous as the effectiveness of the head restraint will be compromised which could cause it to unexpectedly detach from the seat.

CAUTION

- *When installing a head restraint, make sure that it is installed correctly with the front of the head restraint facing forward. If the head restraint is installed incorrectly, it could detach from the seat during a collision and result in injury.*
- *The head restraints on each of the front and rear seats are specialized to each seat. Do not switch around the head restraint positions. If a head restraint is not installed to its correct seat position, the effectiveness of the head restraint during a collision will be compromised which could cause injury.*

Seat Belt Precautions

Seat belts help to decrease the possibility of severe injury during accidents and sudden stops. Mazda recommends that the driver and all passengers always wear seat belts.

(Except Mexico)
All of the seat belt retractors are designed to keep the lap/shoulder belts out of the way when not in use.
The driver's seat belt has no provisions for child-restraint systems and has only an emergency locking mode. The driver may wear it comfortably, and it will lock during a collision.
However, the front passenger's seat and all rear lap/shoulder belt retractors operate in two modes: emergency locking mode, and for child-restraint systems, automatic locking mode. While we recommend you put all children in the rear seats, if you must use the front passenger seat for a child, slide the front passenger seat as far back as possible and make sure any child-restraint system is secured properly.

(Mexico)
All the seats have lap/shoulder belts. These belts have retractors with inertia locks that keep them out of the way when not in use. The locks allow the belts to remain comfortable on users, but they will lock in position during a collision.

WARNING

Always wear your seat belt and make sure all occupants are properly restrained:
Not wearing a seat belt is extremely dangerous. During a collision, occupants not wearing seat belts could hit someone or things inside the vehicle or even be thrown out of the vehicle. They could be seriously injured or even killed. In the same collision, occupants wearing seat belts would be much safer.

Do not wear twisted seat belts:
Twisted seat belts are dangerous. In a collision, the full width of the belt is not available to absorb the impact. This puts more force on the bones beneath the belt, which could cause serious injury or death. So, if your seat belt is twisted, you must straighten the seat belt to remove any twists and to allow the full width of the belt to be used.

Never use one seat belt on more than one person at a time:
Using one seat belt for more than one person at a time is dangerous. A seat belt used in this way cannot spread the impact forces properly and the two passengers could be crushed together and seriously injured or even killed. Never use one belt for more than one person at a time and always operate the vehicle with each occupant properly restrained.

Do not operate a vehicle with a damaged seat belt:
Using a damaged seat belt is dangerous. An accident could damage the belt webbing of the seat belt in use. A damaged seat belt cannot provide adequate protection in a collision. Have an Authorized Mazda Dealer inspect all seat belt systems in use during an accident before they are used again.

Have your seat belts changed immediately if the pretensioner or load limiter has been expended:
Always have an Authorized Mazda Dealer immediately inspect the seat belt pretensioners and air bags after any collision. Like the air bags, the seat belt pretensioners and load limiters will only function once and must be replaced after any collision that caused them to deploy. A seat belt with an expended pretensioner or load limiter is still better than wearing no seat belt at all; however, if the seat belt pretensioners and load limiters are not replaced, the risk of injury in a collision will increase.

Positioning the Shoulder Portion of the Seat Belt:
Improper positioning of the shoulder portion of the seat belt is dangerous. Always make sure the shoulder portion of the seat belt is positioned across your shoulder and near your neck, but never under your arm, on your neck, or on your upper arm.

Positioning the Lap Portion of the Seat Belt:
The lap portion of the seat belt worn too high is dangerous. In a collision, this would concentrate the impact force directly on the abdominal area, causing serious injury. Wear the lap portion of the belt snugly and as low as possible.

⚠ CAUTION

Belt retraction may become difficult if the belts and rings are soiled, so try to keep them clean. For more details about cleaning the seat belts, refer to "Seat Belt Maintenance" (page 6-60).

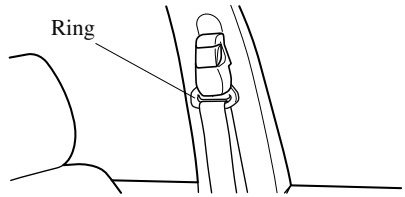

▼ Pregnant Women and Persons with Serious Medical Conditions

Pregnant women should always wear seat belts. Ask your doctor for specific recommendations.
The lap belt should be worn SNUGLY AND AS LOW AS POSSIBLE OVER THE HIPS.
The shoulder belt should be worn across your shoulder properly, but never across the stomach area.
Persons with serious medical conditions also should wear seat belts. Check with your doctor for any special instructions regarding specific medical conditions.

▼ Emergency Locking Mode

When the seat belt is fastened, it will always be in the emergency locking mode.
In the emergency locking mode, the belt remains comfortable on the occupant and the retractor will lock in position during a collision.
If the belt is locked and cannot be pulled out, retract the belt once, and then try pulling it out slowly. If this fails, pull the belt strongly 1 time and loosen, then pull it out again slowly.
(Seat Belt with Automatic Locking Mode)
When the seat belt is fastened, it will always be in the emergency locking mode until it is switched to automatic locking mode by pulling it all the way out to its full length. If the belt feels tight and hinders comfortable movement while the vehicle is stopped or in motion, it may be in the automatic locking mode because the belt has been pulled too far out. To return the belt to the more comfortable emergency locking mode, wait until the vehicle has stopped in a safe, level area, retract the belt fully to convert it back to emergency locking mode and then extend it around you again.

▼ Automatic Locking Mode*

Always use the automatic locking mode to keep the child-restraint system from shifting to an unsafe position in the event of an accident. To enable seat belt automatic locking mode, pull it all the way out and connect it as instructed on the child-restraint system. It will retract down to the child-restraint system and stay locked on it. See the section on child restraint (page 2-23).

*Some models.

Seat Belt

▼ Fastening the Seat Belt

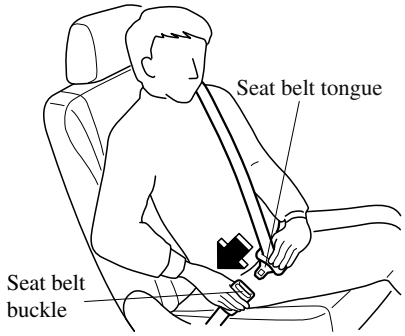

Position the lap belt as low as possible, not on the abdominal area, then adjust the shoulder belt so that it fits snugly against your body.

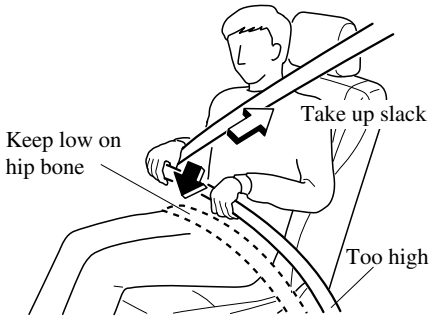

▼ Unfastening the Seat Belt

Depress the button on the seat belt buckle. If the belt does not fully retract, pull it out and check for kinks or twists. Then make sure it remains untwisted as it retracts.

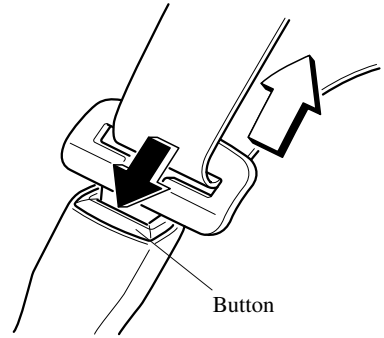

NOTE
If a belt does not fully retract, inspect it for kinks and twists. If it is still not retracting properly, have it inspected at an Authorized Mazda Dealer.

▼ Front Shoulder Belt Adjuster

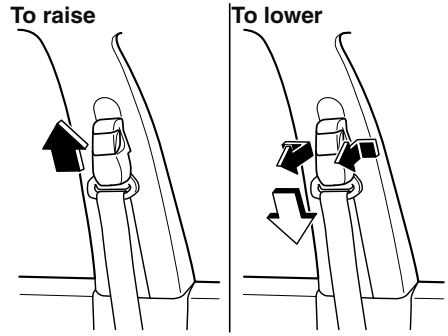

Make sure the adjuster is locked.

Seat Belt Warning Systems

If it detects that the occupant seat belt is unfastened, the warning light or beep alerts the occupant.
Refer to Taking Action on page 7-34.
Refer to Seat Belt Warning Beep on page 7-43.

Front Seat Belt Pretensioner and Load Limiting Systems

For optimum protection, the driver and front passenger seat belts are equipped with pretensioner and load limiting systems. For both these systems to work properly you must wear the seat belt properly.

Pretensioners:
When a collision is detected, the pretensioners deploy simultaneously with the air bags.
For vehicles with the front passenger occupant classification system, the pretensioners deploy simultaneously with the air bags when a roll-over is also detected.
For deployment details, refer to the SRS Air Bag Deployment Criteria (page 2-58).
The front seat belt retractors remove slack quickly as the air bags are expanding. Any time the air bags and seat belt pretensioners have fired they must be replaced.
A system malfunction or operation conditions are indicated by a warning.
Refer to Taking Action on page 7-34.
Refer to Air Bag/Front Seat Belt Pretensioner System Warning Beep on page 7-43.

(With Front Passenger Occupant Classification System)
In addition, the pretensioner system for the front passenger, like the front and side passenger air bag, is designed to only deploy when the front passenger occupant classification sensor detects a passenger sitting on the front passenger's seat.
For details, refer to the front passenger occupant classification sensor (page 2-61).

Load limiter:
The load limiting system releases belt webbing in a controlled manner to reduce belt force on the occupant's chest. While the most severe load on a seat belt occurs in frontal collisions, the load limiter has an automatic mechanical function and can activate in any accident mode with sufficient occupant movement.
Even if the pretensioners have not fired, the load limiting function must be checked by an Authorized Mazda Dealer.

WARNING

Wear seat belts only as recommended in this owner's manual:
Incorrect positioning of the driver and front passenger seat belts is dangerous. Without proper positioning, the pretensioner and load limiting systems cannot provide adequate protection in an accident and this could result in serious injury. For more details about wearing seat belts, refer to "Fastening the seat belts" (page 2-18).

Have your seat belts changed immediately if the pretensioner or load limiter has been expended:
Always have an Authorized Mazda Dealer immediately inspect the seat belt pretensioners and air bags after any collision. Like the air bags, the seat belt pretensioners and load limiters will only function once and must be replaced after any collision that caused them to deploy. A seat belt with an expended pretensioner or load limiter is still better than wearing no seat belt at all; however, if the seat belt pretensioners and load limiters are not replaced, the risk of injury in a collision will increase.

Do not modify the components or wiring, or use electronic testing devices on the pretensioner system:
Modifying the components or wiring of the pretensioner system, including the use of electronic testing devices is dangerous. You could accidentally activate it or make it inoperable which would prevent it from activating in an accident. The occupants or repairers could be seriously injured.

Properly dispose of the pretensioner system:
Improper disposal of the pretensioner system or a vehicle with non-deactivated pretensioners is dangerous. Unless all safety procedures are followed, injury could result. Have an Authorized Mazda Dealer safely dispose of the pretensioner system or scrap a pretensioner system equipped vehicle.

NOTE

- *The pretensioner system may not operate depending on the type of the collision. For details, refer to the SRS Air Bag Deployment Criteria (page 2-58).*
- *Some smoke (non-toxic gas) will be released when the air bags and pretensioners deploy. This does not indicate a fire. This gas normally has no effect on occupants, however, those with sensitive skin may experience light skin irritation. If residue from the deployment of the air bags or the front pretensioner system gets on the skin or in the eyes, wash it off as soon as possible.*

Seat Belt Extender

If your seat belt is not long enough, even when fully extended, a seat belt extender may be available to you at no charge from your Authorized Mazda Dealer.
This extender will be only for you and for the particular vehicle and seat. Even if it plugs into other seat belts, it may not hold in the critical moment of a crash.
When ordering an extender, only order one that provides the necessary additional length to fasten the seat belt properly.
Please contact your Authorized Mazda Dealer for more information.

WARNING

Do not use a seat belt extender unless it is necessary:
Using a seat belt extender when not necessary is dangerous. The seat belt will be too long and not fit properly. In an accident, the seat belt will not provide adequate protection and you could be seriously injured. Only use the extender when it is required to fasten the seat belt properly.

Do not use an improper extender:
Using a seat belt extender that is for another person or a different vehicle or seat is dangerous. The seat belt will not provide adequate protection and the user could be seriously injured in an accident. Only use the extender provided for you and for the particular vehicle and seat. NEVER use the extender in a different vehicle or seat. If you sell your Mazda, do not leave your seat belt extender in the vehicle. It could be used accidentally by the new owner of the vehicle. After removing the seat belt extender, discard it. Never use the seat belt extender in any other vehicle you may own in the future.

Do not use an extender that is too long:
Using an extender that is too long is dangerous. The seat belt will not fit properly. In an accident, the seat belt will not provide adequate protection and you could be seriously injured. Do not use the extender or choose one shorter in length if the distance between the extender's buckle and the center of the user's body is less than 15 cm (6 in).

Do not leave a seat belt extender connected to the buckle:
Leaving a seat belt extender connected to the buckle without using the seat belt is dangerous. When the seat belt extender is connected to the driver's seat belt buckle (or front passenger's seat belt buckle), the SRS driver's (or front passenger's) air bag system will determine that the driver (or front passenger) is wearing the seat belt even if the driver (or front passenger) is not wearing it. This condition could cause the driver's (or front passenger's) air bag to not activate correctly and result in death or serious injury in the event of collision. Always wear the seat belt with the seat belt extender.

Do not use the seat belt extender when installing a child-restraint system on the front or rear passenger seat:
Using a seat belt extender to fasten a child-restraint system on any seat is dangerous. Always follow the child-restraint system manufacturer's installation instructions and never use a seat belt extender.

NOTE
When not in use, remove the seat belt extender and store it in the vehicle. If the seat belt extender is left connected, the seat belt extender might get damaged as it will not retract with the rest of the seat belt and can easily fall out of the door when not in use and be damaged. In addition, the seat belt warning light will not illuminate and function properly.

Child-Restraint Precautions

Mazda strongly urges the use of child-restraint systems for children small enough to use them.

You are required by law to use a child-restraint system for children in the U.S. and Canada. Check your local and state or provincial laws for specific requirements regarding the safety of children riding in your vehicle.

Whatever child-restraint system you consider, please pick the appropriate one for the age and size of the child, obey the law and follow the instructions that come with the individual child-restraint system.

A child who has outgrown child-restraint systems should sit in the rear and use seat belts, both lap and shoulder. If the shoulder belt crosses the neck or face, move the child closer to the center of the vehicle in the outboard seats, and towards the buckle on the right if the child is seated on the center seat.

Statistics confirm that the rear seat is the best place for all children up to 12 years of age, and more so with a supplemental restraint system (air bags).

A rear-facing child-restraint system should **NEVER** be used on the front seat with the air bag system activated. The front passenger's seat is also the least preferred seat for other child-restraint systems.

(With Front Passenger Occupant Classification System)
To reduce the chance of injuries caused by deployment of the front passenger air bag, the front passenger occupant classification sensor works as a part of the supplemental restraint system. This system deactivates the front passenger front and side air bags and also the front passenger seat belt pretensioner system when the front passenger air bag deactivation indicator light illuminates.

When an infant or small child sits on the front passenger seat, the system shuts off the front passenger front and side air bags and seat belt pretensioner system, so make sure the front passenger air bag deactivation indicator light illuminates.

Even if the front passenger air bag is shut off, Mazda strongly recommends that children be properly restrained and child-restraint systems of all kinds are properly secured on the rear seats which are the best place for children.

For more details, refer to "Front passenger occupant classification sensor" (page 2-61).

Child Restraint

WARNING

Use the correct size child-restraint system:
For effective protection in vehicle accidents and sudden stops, a child must be properly restrained using a seat belt or child-restraint system depending on age and size. If not, the child could be seriously injured or even killed in an accident.

Follow the manufacturer's instructions and always keep the child-restraint system buckled down:
An unsecured child-restraint system is dangerous. In a sudden stop or a collision it could move causing serious injury or death to the child or other occupants. Make sure any child-restraint system is properly secured in place according to the child-restraint system manufacturer's instructions. When not in use, remove it from the vehicle or fasten it with a seat belt, or latch it down to BOTH LATCH lower anchors for LATCH child-restraint systems and the corresponding tether anchor.

Always secure a child in a proper child-restraint system:
Holding a child in your arms while the vehicle is moving is extremely dangerous. No matter how strong the person may be, he or she cannot hold onto a child in a sudden stop or collision and it could result in serious injury or death to the child or other occupants. Even in a moderate accident, the child may be exposed to air bag forces that could result in serious injury or death to the child, or the child may be slammed into an adult, causing injury to both child and adult.

Never use a rear-facing child-restraint system in the front seat with an air bag that could deploy:
Rear-facing child-restraint systems on the front seat are particularly dangerous even though you may feel assured that a front passenger air bag will not deploy based on the fact that the front passenger air bag deactivation indicator light illuminates. The child-restraint system can be hit by a deploying air bag and moved violently backward resulting in serious injury or death to the child.

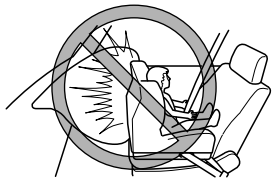

(Except Mexico)
Vehicles with a front passenger air bag have the following warning label. The warning label reminds you not to put a rear-facing child-restraint system on the front passenger seat at any time.

(Mexico)
NEVER use a rearward facing child restraint on a seat protected by an ACTIVE AIRBAG in front of it, DEATH or SERIOUS INJURY to the CHILD can occur.
Vehicles with a front passenger air bag have the following warning label. The warning label reminds you not to put a rear-facing child-restraint system on the front passenger seat at any time.

Do not install a front-facing child-restraint system on the front passenger seat unless it is unavoidable:
In a collision, the force of a deploying air bag could cause serious injury or death to the child. If installing a front-facing child-restraint system on the front passenger seat is unavoidable, move the front passenger seat as far back as possible and adjust the seat bottom (height adjustable seat bottom) to the highest position at which the seat belt fastening the child-restraint system is securely tightened.

Seating a child in a child-restraint system on the front passenger seat is dangerous under certain conditions (With Front Passenger Occupant Classification System):
Your vehicle is equipped with front passenger occupant classification sensor. Even with the front passenger occupant classification sensor, if you must use the front passenger seat to seat a child, using a child-restraint system on the front passenger seat under the following conditions increases the danger of the front passenger air bag deploying and could result in serious injury or death to the child.

- *The front passenger air bag deactivation indicator light does not illuminate when seating a child in the child-restraint system.*
- *Luggage or other items are placed on the seat with the child in the child-restraint system.*
- *A rear passenger or luggage pushing or pulling down on the front passenger seatback.*
- *Luggage or other items are placed on the seatback or hung on the head restraint.*
- *The seat is washed.*
- *Liquids are spilled on the seat.*
- *The front passenger seat is moved backward, pushing into luggage or other items placed behind it.*
- *The front passenger seatback contacts the rear seat.*
- *Luggage or other items are placed between the front passenger seat and driver seat.*
- *An electric device is put on the front passenger's seat.*
- *An additional electrical device, such as a seat warmer is installed to the surface of the front passenger seat.*

The designated positions with seat belts on the rear seats are the safest places for children. Always use seat belts and child restraints.

Do not allow a child or anyone to lean over or against the side window of a vehicle with side and curtain air bags:
It is dangerous to allow anyone to lean over or against the side window, the area of the front passenger seat, the front and rear window pillars and the roof edge along both sides from which the side and curtain air bags deploy, even if a child-restraint system is used. The impact of inflation from a side or curtain air bag could cause serious injury or death to an out of position child. Furthermore, leaning over or against the front door could block the side and curtain air bags and eliminate the advantages of supplemental protection. With the front air bag and the additional side air bag that comes out of the front seat, the rear seat is always a better location for children. Take special care not to allow a child to lean over or against the side window, even if the child is seated in a child-restraint system.

Never use one seat belt on more than one person at a time:
Using one seat belt for more than one person at a time is dangerous. A seat belt used in this way cannot spread the impact forces properly and the two passengers could be crushed together and seriously injured or even killed. Never use one belt for more than one person at a time and always operate the vehicle with each occupant properly restrained.

CAUTION

A seat belt or child-restraint system can become very hot in a closed vehicle during warm weather. To avoid burning yourself or a child, check them before you or your child touches them.

NOTE
Your Mazda is equipped with LATCH lower anchors for attachment of specially designed LATCH child-restraint systems on the rear seats. When using these anchors to secure a child-restraint system, refer to "Using LATCH Lower Anchor" (page 2-41).

Child-Restraint System Installation

▼ Categories of Child-Restraint Systems

NOTE
When purchasing, ask the manufacturer of the child-restraint system which type of child-restraint system is appropriate for your child and vehicle.

(Mexico)
Child-restraint systems are classified into the following 5 groups according to the UNECE 44 regulation.

Group	Age	Weight
0	Up to about 9 months old	Up to 10 kg (up to 22 lb)
0+	Up to about 2 years old	Up to 13 kg (up to 29 lb)
1	About 8 months to 4 years old	9 kg — 18 kg (20 lb — 40 lb)
2	About 3 to 7 years old	15 kg — 25 kg (33 lb — 55 lb)
3	About 6 to 12 years old	22 kg — 36 kg (48 lb — 79 lb)

(Except Mexico)
Please comply with the legal regulations concerning the use of child-restraint systems in your country.

▼ Child-Restraint System Types

In this owner's manual, explanation of child-restraint systems is provided for the following three types of popular child-restraint systems: infant seat, child seat, booster seat.

NOTE

- *Installation position is determined by the type of child-restraint system. Always read the manufacturer's instructions and this owner's manual carefully.*
- *Due to variations in the design of child-restraint systems, vehicle seats and seat belts, all child-restraint systems may not fit all seating positions. Before purchasing a child-restraint system, it should be tested in the specific vehicle seating position (or positions) where it is intended to be used. If a previously purchased child-restraint system does not fit, you may need to purchase a different one that will.*

Infant seat
An infant seat provides restraint by bracing the infant's head, neck and back against the seating surface.
Equal to Group 0 and 0+ of the UNECE 44 regulation.

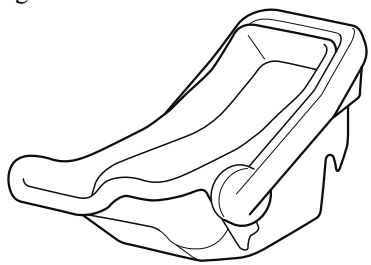

Child seat
A child seat restrains a child's body using the harness.
Equal to Group 1 of the UNECE 44 regulation.

Booster seat
A booster seat is a child restraint accessory designed to improve the fit of the seat belt system around the child's body.
Equal to Group 2 and 3 of the UNECE 44 regulation.

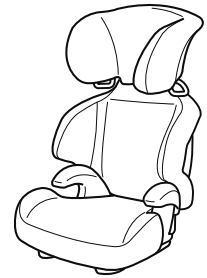

*1 Backless booster seat

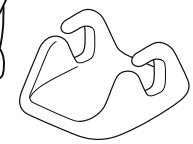

*1 When using a backless booster seat, always install the vehicle head restraint to the seat where the backless booster seat is installed.

Child-Restraint System Suitability for Various Seat Positions Table

(Mexico)
Provided information in the table shows your child-restraint system suitability for various seating position. For installation suitability of other manufacturer child-restraint system, carefully consult the manufacturer's instructions which accompany the child-restraint system.
When installing a child-restraint system, the following points must be observed:

- If the child-restraint system does not fit into the seatback because of the head restraint, adjust the head restraint or remove the head restraint so that the child-restraint system fits into the seatback. However, when installing a backless booster seat, always install the vehicle head restraint to the seat where the backless booster seat is installed.
  Refer to Head Restraints on page 2-12.
- When installing a child-restraint system to the rear seat, adjust the front seat position so that the front seat does not contact the child-restraint system.
  Refer to Seat Operation on page 2-5.
- When installing a child-restraint system came equipped with a tether, remove the head restraint.
  Refer to Head Restraints on page 2-12.

LATCH lower anchor-secured child-restraint systems

When installing a child-restraint system to the rear seat, refer to the child-restraint system manufacturer's instructions and the Using LATCH Lower Anchor on page 2-41.

Mass group	Size Class	Fixture	Seat Positions		
			Vehicle LATCH positions	Rear seat (center)	Front passenger seat (outboard)
			Rear seat (outboard)		
Carrycot	F	ISO/L1	X	X	X
	G	ISO/L2	X	X	X
		(1)	X	X	X
GROUP 0 Up to 10 kg (up to 22 lb)	E	ISO/R1	IL	X	X
		(1)	X	X	X
GROUP 0+ Up to 13 kg (up to 29 lb)	E	ISO/R1	IL	X	X
	D	ISO/R2	IL	X	X
	C	ISO/R3	IL	X	X
		(1)	X	X	X

Mass group	Size Class	Fixture	Seat Positions		
			Vehicle LATCH positions	Rear seat (center)	Front passenger seat (outboard)
			Rear seat (outboard)		
GROUP 1 9 kg — 18 kg (20 lb — 40 lb)	D	ISO/R2	IL	X	X
	C	ISO/R3	IL	X	X
	B	ISO/F2	IUF	X	X
	B1	ISO/F2X	IUF	X	X
	A	ISO/F3	IUF	X	X
		(1)	X	X	X
GROUP 2 15 kg — 25 kg (33 lb — 55 lb)		(1)	X	X	X
GROUP 3 22 kg — 36 kg (48 lb — 79 lb)		(1)	X	X	X

(1) For the CRS which do not carry the ISO/XX size class identification (A to G), for the applicable mass group, the car manufacturer shall indicate the vehicle specific LATCH child-restraint system(s) recommended for each position.
Key of letters to be inserted in the above table:
IUF = suitable for LATCH forward child-restraints systems of universal category approved for use in this mass group.
IL = suitable for particular LATCH child-restraint systems (CRS).
These LATCH CRS are those of the “specific vehicle”, “restricted” or “semi-universal” categories.
A Mazda genuine child-restraint system can be installed. Regarding child-restraint systems which can be installed, refer to the accessories catalog.
X = LATCH position not suitable for LATCH child-restraint systems in this mass group and/or this size class.

i-Size child-restraint systems

An i-Size child-restraint system can be installed to the specified seat as follows:

	Front passenger seat	Rear seat (outboard)	Rear seat (center)
i-Size child-restraint systems	X	X	X

Key of letters to be inserted in the above table:
X = Seating position not suitable for i-Size “universal” child-restraint systems.

NOTE
An i-Size child-restraint system refers to a child-restraint system which has acquired i-Size category certification for the UNECE 129 regulation.

Seat belt-secured child-restraint systems

System group	Age group	Weight group	Child-restraint system type	Front passenger seat	Rear seat (outboard)	Rear seat (center)
GROUP 0	Up to about 9 months old	Up to 10 kg (up to 22 lb)	Infant seat	X	U	X
GROUP 0+	Up to about 2 years old	Up to 13 kg (up to 29 lb)	Infant seat	X	U	X
GROUP 1	About 8 months to 4 years old	9 kg — 18 kg (20 lb — 40 lb)	Child seat	UF	U	X
GROUP 2	About 3 to 7 years old	15 kg — 25 kg (33 lb — 55 lb)	Booster seat	UF	U	X
GROUP 3	About 6 to 12 years old	22 kg — 36 kg (48 lb — 79 lb)	Booster seat	UF	U	X

Key of letters to be inserted in the above table:
U = Suitable for “universal” category restraints approved for use in this mass group.
UF = Suitable for forward-facing “universal” category restraints approved for use in this mass group.
X = Seat position not suitable for children in this mass group.

(Except Mexico)

Please comply with the legal regulations concerning the use of child-restraint systems in your country.

Installing Child-Restraint Systems

Accident statistics reveal that a child is safer in the rear seat. The front passenger's seat is clearly the worst choice for any child under 12, and with rear-facing child-restraint systems it is clearly unsafe due to air bags.

NOTE
Even if your vehicle is equipped with front passenger occupant classification sensor (page 2-61), which automatically deactivates the front passenger air bag, a rear seat is the safest place for a child of any age or size.

Some child-restraint systems now come with tethers and therefore must be installed on the seats that take tethers to be effective. In your Mazda, tethered child-restraint systems can only be accommodated in the three positions on the rear seat.

Some child-restraint systems also employ specially designed LATCH attachments; refer to "Using LATCH Lower Anchor" (page 2-41).

⚠ WARNING

Tethered Child-Restraint Systems Work Only on Tether-Equipped Rear Seats:
Installation of a tether equipped child-restraint system in the front passenger's seat defeats the safety design of the system and will result in an increased chance of serious injury if the child-restraint system goes forward without benefit of being tethered.
Place tether equipped child-restraint systems where there are tether anchors.

▼ Anchor Bracket

Anchor brackets for securing child-restraint systems are equipped in the vehicle. Locate each anchor position using the illustration.
To install a child-restraint system, remove the head restraint. Always follow the instruction manual accompanying the child-restraint system.

Anchor bracket location
Use the indicated anchor bracket locations when installing a child-restraint system equipped with a tether.

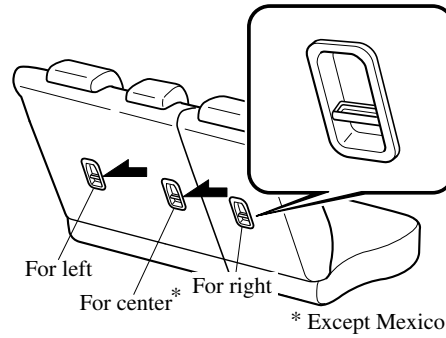

WARNING

Always attach the tether strap to the correct tether anchor position:
Attaching the tether strap to the incorrect tether anchor position is dangerous. In a collision, the tether strap could come off and loosen the child-restraint system. If the child-restraint system moves it could result in death or injury to the child.

Always remove the head restraint and install child-restraint system:
Installing a child-restraint system without removing the head restraint is dangerous. The child-restraint system cannot be installed correctly which may result in death or injury to the child in a collision.

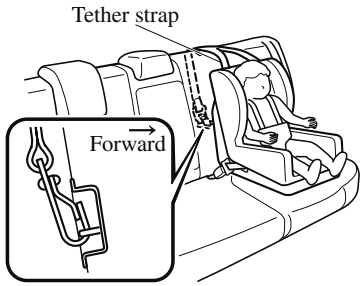

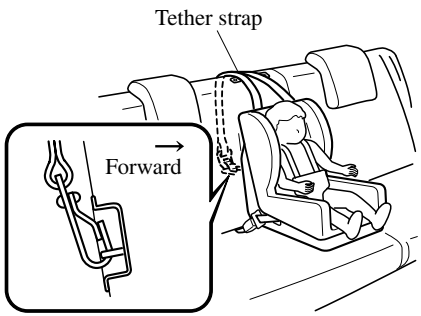

Always install the head restraint and adjust it to the appropriate position after removing the child-restraint system:
Driving with the head restraint removed is dangerous as impact to the occupant's head cannot be prevented during emergency braking or in a collision, which could result in a serious accident, injury or death.
Refer to Head Restraints on page 2-12.

▼ Using Automatic Locking Mode*

Follow these instructions when using a child-restraint system, unless you are attaching a LATCH-equipped child-restraint system to the rear LATCH lower anchors. Refer to “Using LATCH Lower Anchor” (page 2-41).

NOTE
Follow the child-restraint system manufacturer's instructions carefully. If you are not sure whether you have a LATCH system or tether, check in the child-restraint system manufacturer's instructions and follow them accordingly. Depending on the type of child-restraint system, it may use LATCH system instead of seat belts or if the belt goes across the child's chest, may recommend against using automatic locking mode.

1. Make sure the seatback is securely latched by pushing it back until it is fully locked.
2. Remove the head restraint. However, when installing a backless booster seat, always install the vehicle head restraint to the seat where the backless booster seat is installed.
   Refer to Head Restraints on page 2-12.

 *Some models.

3. Secure the child-restraint system with the lap portion of the lap/shoulder belt. See the manufacturer's instructions on the child-restraint system for belt routing instructions.
4. To get the retractor into the automatic locking mode, pull the shoulder belt portion of the seat belt until the entire length of the belt is out of the retractor.

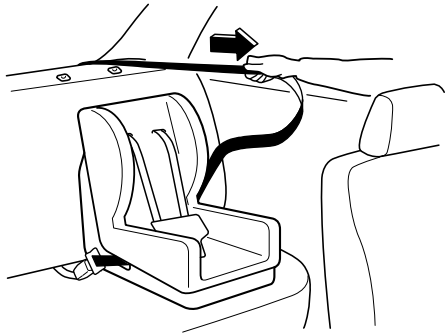

5. Push the child-restraint system firmly into the vehicle seat. Be sure the belt retracts as snugly as possible. A clicking noise from the retractor will be heard during retraction if the system is in the automatic locking mode. If the belt does not lock the seat down tight, repeat this step.

NOTE

- *Inspect this function before each use of the child-restraint system. You should not be able to pull the shoulder belt out of the retractor while the system is in the automatic locking mode. When you remove the child-restraint system, be sure the belt fully retracts to return the system to emergency locking mode before occupants use the seat belts.*

6. If your child-restraint system requires the use of a tether strap, refer to the manufacturer's instructions to hook and tighten the tether strap.

⚠ WARNING

Use the tether and tether anchor only for a child-restraint system:
Using the tether or tether anchor to secure anything but a child-restraint system is dangerous. This could weaken or damage the tether or tether anchor and result in injury.

Always remove the head restraint and install child-restraint system (except when installing a backless booster seat):
Installing a child-restraint system without removing the head restraint is dangerous. The child-restraint system cannot be installed correctly which may result in death or injury to the child in a collision.

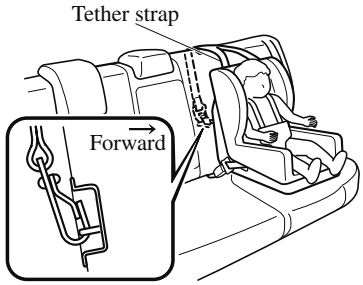

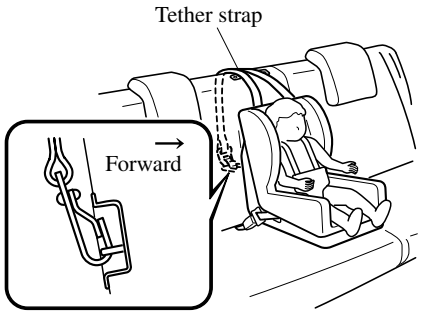

Always attach the tether strap to the correct tether anchor position:
Attaching the tether strap to the incorrect tether anchor position is dangerous. In a collision, the tether strap could come off and loosen the child-restraint system. If the child-restraint system moves it could result in death or injury to the child.

Always install the head restraint and adjust it to the appropriate position after removing the child-restraint system:
Driving with the head restraint removed is dangerous as impact to the occupant's head cannot be prevented during emergency braking or in a collision, which could result in a serious accident, injury or death.
Refer to Head Restraints on page 2-12.

▼ If You Must Use the Front Seat for Children

If you cannot put all children in the rear seat, at least put the smallest children in the rear and be sure the largest child up front uses the shoulder belt over the shoulder.
NEVER put a rear-facing child-restraint system on the front passenger seat whether your vehicle is equipped with an occupant classification sensor or not.
This seat is also not set up for tethered child-restraint systems, put them in one of the rear seat positions set up with tether anchors.
Likewise the LATCH child-restraint system cannot be secured in the front passenger's seat and should be used in the rear seat.
Do not allow anyone to sleep against the side window since your vehicle has side and curtain air bags, it could cause serious injuries to an out of position occupant. As children more often sleep in cars, it is better to put them in the rear seat. If installing the child-restraint system on the front seat is unavoidable, follow these instructions when using a front-facing child-restraint system in the front passenger's seat.

NOTE

- *To check if your front seats have side air bags:*
  Mazda vehicles equipped with side air bag will have a "SRS AIRBAG" tag on the outboard shoulder of the front seats.
- *To check if your vehicle has curtain air bags:*
  Mazda vehicles equipped with curtain air bag will have an "SRS AIRBAG" marking on the window pillars along the roof edge.

⚠ WARNING

Always move the front passenger seat as far back as possible if installing a front-facing child-restraint system on it is unavoidable:
As your vehicle has front air bags and doubly so because your vehicle has side air bags, a front-facing child-restraint system should be put on the front passenger seat only when it is unavoidable.
Even if the front passenger air bag deactivation indicator light illuminates, always move the seat as far back as possible, because the force of a deploying air bag could cause serious injury or death to the child.

Never use a rear-facing child-restraint system in the front seat with an air bag that could deploy:
Rear-facing child-restraint systems on the front seat are particularly dangerous.

Even in a moderate collision, the child-restraint system can be hit by a deploying air bag and moved violently backward resulting in serious injury or death to the child. Even though you may feel assured that the front passenger air bag will not deploy based on the fact that the front passenger air bag deactivation indicator light illuminates, you should not use a rear-facing child-restraint system in the front seat.

Do not allow a child or anyone to lean over or against the side window of a vehicle with side and curtain air bags:
It is dangerous to allow anyone to lean over or against the side window, the area of the front passenger seat, the front and rear window pillars and the roof edge along both sides from which the side and curtain air bags deploy, even if a child-restraint system is used. The impact of inflation from a side or curtain air bag could cause serious injury or death to an out of position child. Furthermore, leaning over or against the front door could block the side and curtain air bags and eliminate the advantages of supplemental protection. With the front air bag and the additional side air bag that comes out of the front seat, the rear seat is always a better location for children. Take special care not to allow a child to lean over or against the side window, even if the child is seated in a child-restraint system.

Always remove the head restraint and install child-restraint system (except when installing a backless booster seat):
Installing a child-restraint system without removing the head restraint is dangerous. The child-restraint system cannot be installed correctly which may result in death or injury to the child in a collision.

Always install the head restraint and adjust it to the appropriate position after removing the child-restraint system:
Driving with the head restraint removed is dangerous as impact to the occupant's head cannot be prevented during emergency braking or in a collision, which could result in a serious accident, injury or death.
Refer to Head Restraints on page 2-12.

Front Passenger's Seat Child-Restraint System Installation (With Front Passenger Occupant Classification System)

1. Make sure the ignition is switched off.
2. Slide the seat as far back as possible.

3. Remove the head restraint. However, when installing a backless booster seat, always install the vehicle head restraint to the seat where the backless booster seat is installed.

4. Place the child-restraint system on the seat without putting your weight on the seat and fasten the seat belt. See the manufacturer's instructions on the child-restraint system for belt routing instructions.
5. To get the retractor into the automatic locking mode, pull the shoulder belt portion of the seat belt until the entire length of the belt is out of the retractor.
6. Push the child-restraint system firmly into the vehicle seat. Be sure the belt retracts as snugly as possible. A clicking noise from the retractor will be heard during retraction if the system is in automatic locking mode. If the belt does not lock the seat down tight, repeat the previous step and also this one.

NOTE

- *Inspect this function before each use of the child-restraint system. You should not be able to pull the shoulder belt out of the retractor while the system is in the automatic locking mode. When you remove the child-restraint system, be sure the belt fully retracts to return the system to emergency locking mode before occupants use the seat belts.*
- *Follow the child-restraint system manufacturer's instructions carefully.*
  Depending on the type of child-restraint system, it may not employ seat belts which are in automatic locking mode.

7. Seat your child safely in the child-restraint system and secure the child according to the instructions from the child-restraint system manufacturer.
8. Switch the ignition ON and make sure the front passenger air bag deactivation indicator light illuminates after installing a child-restraint system on the front passenger seat.
   If the front passenger air bag deactivation indicator light does not illuminate, remove the child-restraint system, switch the ignition to OFF, and then re-install the child-restraint system (page 2-61).

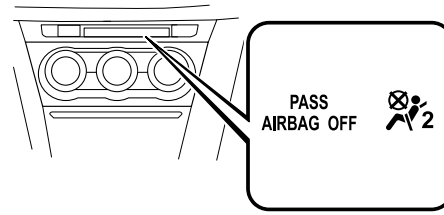

WARNING

Do not seat a child in a child-restraint system on the front passenger seat if the front passenger air bag deactivation indicator light does not illuminate:
While it is always better to install any child-restraint system on the rear seat, it is imperative that a child-restraint system ***ONLY*** *be used on the front passenger seat if the deactivation indicator light illuminates when the child is seated in the child-restraint system (page 2-61). Seating a child in a child-restraint system installed on the front passenger seat with the front passenger air bag deactivation indicator light not illuminated is dangerous. If this indicator light does not illuminate, this means that the front passenger front and side air bags, and seat belt pretensioner are ready for deployment. If an accident were to deploy an air bag, a child in a child-restraint system sitting in the front passenger seat could be seriously injured or killed. If the indicator light does not illuminate after seating a child in a child-restraint system on the front passenger seat, seat a child in a child-restraint system on the rear seat and consult an Authorized Mazda Dealer as soon as possible.*

▼ Using LATCH Lower Anchor

Your Mazda is equipped with LATCH lower anchors for attachment of specially designed LATCH child-restraint systems in the rear seats. Both anchors must be used, otherwise the seat will bounce around and put the child in danger. Most LATCH child-restraint systems must also be used in conjunction with a tether to be effective. If they have a tether you must use it to better assure your child's safety.

WARNING

Follow the manufacturer's instructions for the use of the child-restraint system:
An unsecured child-restraint system is dangerous. In a sudden stop or a collision it could move causing serious injury or death to the child or other occupants. Make sure the child-restraint system is properly secured in place according to the child-restraint system manufacturer's instructions.

Never attach two child-restraint systems to the same LATCH lower anchor:
Attaching two child-restraint systems to the same LATCH lower anchor is dangerous. In a collision, one anchor may not be strong enough to hold two child-restraint system attachments, and it may break, causing serious injury or death. If you use the seat position for another child-restraint system when an outboard LATCH position is occupied, use the center seat belts instead, and the tether if tether-equipped.

Make sure the child-restraint system is properly secured:
An unsecured child-restraint system is dangerous. In a sudden stop or a collision it could move causing serious injury or death to the child or other occupants. Follow the child-restraint system manufacturer's instructions on belt routing to secure the seat just as you would with a child in it so that nobody is tempted to put a child in an improperly secured seat later on. When not in use, remove it from the vehicle or fasten it with a seat belt, or latch it down to BOTH LATCH lower anchors for LATCH child-restraint systems.

Make sure there are no seat belts or foreign objects near or around the LATCH child-restraint system:
Not following the child-restraint system manufacturer's instructions when installing the child-restraint system is dangerous. If seat belts or a foreign object prevent the child-restraint system from being securely attached to the LATCH lower anchors and the child-restraint system is installed improperly, the child-restraint system could move in a sudden stop or collision causing serious injury or death to the child or other occupants. When installing the child-restraint system, make sure there are no seat belts or foreign objects near or around the LATCH lower anchors. Always follow the child-restraint system manufacturer's instructions.

Installation on rear outboard seats

1. First, adjust the front seat to allow clearance between the child-restraint system and the front seat (page 2-5).
2. Make sure the seatback is securely latched by pushing it back until it is fully locked.
3. Expand the open seams on the rear of the seat bottom slightly to verify the locations of the LATCH lower anchors.

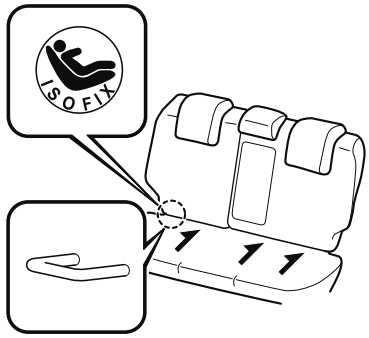

NOTE

- *The markings above the LATCH lower anchors indicate the locations of the LATCH lower anchors for the attachment of a child-restraint system.*

4. Remove the head restraint. However, when installing a backless booster seat, always install the vehicle head restraint to the seat where the backless booster seat is installed.
   Refer to Head Restraints on page 2-12.
5. Secure the child-restraint system using BOTH LATCH lower anchors, following the child-restraint system manufacturer's instruction. Pull on the child-restraint to be sure both anchors are engaged.
6. If your child-restraint system came equipped with a tether, that means it is very important to properly secure the tether for child safety. Please carefully follow the child-restraint system manufacturer's instructions when installing tethers.

WARNING

Use the tether and tether anchor only for a child-restraint system:
Using the tether or tether anchor to secure anything but a child-restraint system is dangerous. This could weaken or damage the tether or tether anchor and result in injury.

Always remove the head restraint and install child-restraint system (except when installing a backless booster seat):
Installing a child-restraint system without removing the head restraint is dangerous. The child-restraint system cannot be installed correctly which may result in death or injury to the child in a collision.

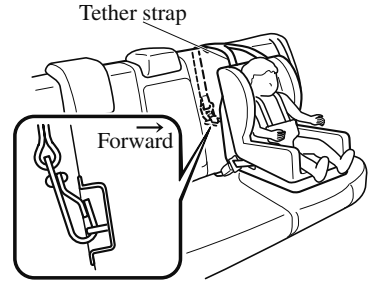

Always attach the tether strap to the correct tether anchor position:
Attaching the tether strap to the incorrect tether anchor position is dangerous. In a collision, the tether strap could come off and loosen the child-restraint system. If the child-restraint system moves it could result in death or injury to the child.

Always install the head restraint and adjust it to the appropriate position after removing the child-restraint system:
Driving with the head restraint removed is dangerous as impact to the occupant's head cannot be prevented during emergency braking or in a collision, which could result in a serious accident, injury or death.
Refer to Head Restraints on page 2-12.

Installation on rear center seat

The LATCH lower anchors at the center of the rear seat are much further apart than the sets of LATCH lower anchors for child-restraint system installation at other seating positions. Child-restraint systems with rigid LATCH attachments cannot be installed on the center seating position. Some LATCH equipped child-restraint systems can be placed in the center position and will reach the nearest LATCH lower anchors which are 360 mm (14.2 in) apart. LATCH compatible child-restraint systems (with attachments on belt webbing) can be used at this seating position only if the child-restraint system manufacturer's instructions state that the child-restraint system can be installed to LATCH lower anchors that are 360 mm (14.2 in) apart. Do not attach two child-restraint systems to the same LATCH lower anchor. If your child-restraint system has a tether, it must also be used for your child's optimum safety.

The procedure for installation on the rear outboard seats is the same.

LATCH lower anchor location

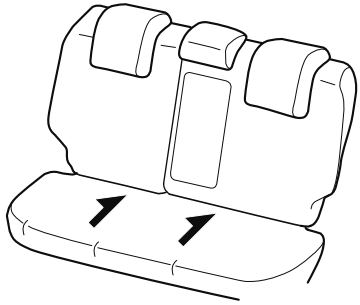

WARNING

Always remove the head restraint and install child-restraint system (except when installing a backless booster seat):
Installing a child-restraint system without removing the head restraint is dangerous. The child-restraint system cannot be installed correctly which may result in death or injury to the child in a collision.

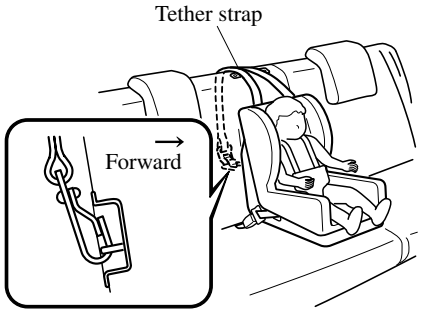

Always attach the tether strap to the correct tether anchor position:
Attaching the tether strap to the incorrect tether anchor position is dangerous. In a collision, the tether strap could come off and loosen the child-restraint system. If the child-restraint system moves it could result in death or injury to the child.

Always install the head restraint and adjust it to the appropriate position after removing the child-restraint system:
Driving with the head restraint removed is dangerous as impact to the occupant's head cannot be prevented during emergency braking or in a collision, which could result in a serious accident, injury or death.
Refer to Head Restraints on page 2-12.

Supplemental Restraint System (SRS) Precautions

The front and side supplemental restraint systems (SRS) include different types of air bags. **Please verify the different types of air bags which are equipped on your vehicle by locating the "SRS AIRBAG" location indicators.** These indicators are visible in the area where the air bags are installed.
The air bags are installed in the following locations:

- The steering wheel hub (driver air bag)
- The front passenger dashboard (front passenger air bag)
- The outboard sides of the front seatbacks (side air bags)*
- The front and rear window pillars, and the roof edge along both sides (curtain air bags)*

Vehicles with the Front Passenger Occupant Classification System have a sensor which detects an impending roll-over accident.

The air bag supplemental restraint systems are designed to provide supplemental protection in certain situations so seat belts are always important in the following ways:

Without seat belt usage, the air bags cannot provide adequate protection during an accident. Seat belt usage is necessary to:

- Keep the occupant from being thrown into an inflating air bag.
- Reduce the possibility of injuries during an accident that is not designed for air bag inflation, such as rear impact.
- Reduce the possibility of injuries in frontal, near frontal or side collisions or roll-over accidents that are not severe enough to activate the air bags.
- Reduce the possibility of being thrown from your vehicle.
- Reduce the possibility of injuries to lower body and legs during an accident because the air bags provide no protection to these parts of the body.
- Hold the driver in a position which allows better control of the vehicle.

*Some models.

If your vehicle is also equipped with a front passenger occupant classification system, refer to the Front Passenger Occupant Classification System (page 2-61) for details.
If your vehicle is equipped with a front passenger occupant classification system, the front passenger air bag deactivation indicator light illuminates for a specified time after the ignition is switched ON.

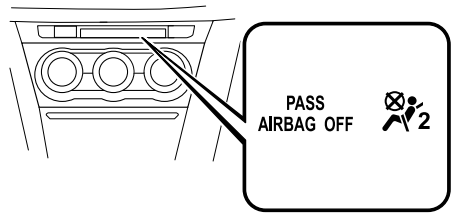

Small children must be protected by a child-restraint system as stipulated by law in every state and province. In certain states and provinces, larger children must use a child-restraint system (page 2-23).

Carefully consider which child-restraint system is necessary for your child and follow the installation directions in this Owner's Manual as well as the child-restraint system manufacturer's instructions.

WARNING

Seat belts must be worn in air bag equipped vehicles:
Depending only on the air bags for protection during an accident is dangerous. Alone, air bags may not prevent serious injuries. The appropriate air bags can be expected to inflate only in the first accident, such as frontal, near frontal or side collisions or roll-over accidents that are at least moderate. Vehicle occupants should always wear seat belts.

Children should not ride in the front passenger seat:
Placing a child, 12 years or under, in the front seat is dangerous. The child could be hit by a deploying air bag and be seriously injured or even killed. A sleeping child is more likely to lean against the door and be hit by the side air bag in moderate collision to the front-passenger side of the vehicle. Whenever possible, always secure a child 12 years and under on the rear seats with an appropriate child-restraint system for the child's age and size.

Never use a rear-facing child-restraint system in the front seat with an air bag that could deploy:
Rear-facing child-restraint systems on the front seat are particularly dangerous even though you may feel assured that a front passenger air bag will not deploy based on the fact that the front passenger air bag deactivation indicator light illuminates. The child-restraint system can be hit by a deploying air bag and moved violently backward resulting in serious injury or death to the child.

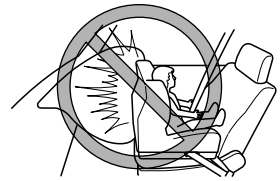

Do not sit too close to the driver and front passenger air bags:
Sitting too close to the driver and front passenger air bag modules or placing hands or feet on them is extremely dangerous. The driver and front passenger air bags inflate with great force and speed. Serious injuries could occur if someone is too close. The driver should always hold onto only the rim of the steering wheel. The front seat passenger should keep both feet on the floor. Front seat occupants should adjust their seats as far back as possible and always sit upright against the seatbacks with seat belts worn properly.

Sit in the center of the seat and wear seat belts properly:
Sitting too close to the side air bag modules or placing hands on them, or sleeping up against the door or hanging out the windows is extremely dangerous. The side and curtain air bags inflate with great force and speed directly expanding along the door on the side the car is hit. Serious injury could occur if someone is sitting too close to the door or leaning against a window, or if rear seat occupants grab the sides of the front seatbacks. Give the side and curtain air bags room to work by sitting in the center of the seat while the vehicle is moving with seat belts worn properly.

Do not attach objects on or around the area where driver and front passenger air bags deploy:
Attaching an object to the driver and front passenger air bag modules or placing something in front of them is dangerous. In an accident, an object could interfere with air bag inflation and injure the occupants.

Do not attach objects on or around the area where a side air bag deploys:
Attaching objects to the front seat in such a way as to cover the outboard side of the seat in any way is dangerous. In an accident the object could interfere with the side air bag, which inflates from the outboard side of the front seats, impeding the added protection of the side air bag system or redirecting the air bag in a way that is dangerous. Furthermore, the bag could be cut open releasing the gas.
Do not hang net bags, map pouches or backpacks with side straps on the front seats. Never use seat covers on the front seats. Always keep the side air bag modules in your front seats free to deploy in the event of a side collision.

Do not attach objects on or around the area where a curtain air bag deploys:
Attaching objects to the areas where the curtain air bag activates such as on the windshield glass, side door glass, front and rear window pillars and along the roof edge and assist grips is dangerous. In an accident the object could interfere with the curtain air bag, which inflates from the front and rear window pillars and along the roof edge, impeding the added protection of the curtain air bag system or redirecting the air bag in a way that is dangerous. Furthermore, the bag could be cut open releasing the gas.
Do not place hangers or any other objects on the assist grips. When hanging clothes, hang them on the coat hook directly. Always keep the curtain air bag modules free to deploy in the event of a side collision or roll-over accident.

Do not touch the components of the supplemental restraint system after the air bags have inflated:
Touching the components of the supplemental restraint system after the air bags have inflated is dangerous. Immediately after inflation, they are very hot. You could get burned.

Never install any front-end equipment to your vehicle:
Installation of front-end equipment, such as frontal protection bar (kangaroo bar, bull bar, push bar, or other similar devices), snowplow, or winches, is dangerous. The air bag crash sensor system could be affected. This could cause air bags to inflate unexpectedly, or it could prevent the air bags from inflating during an accident. Front occupants could be seriously injured.

Do not modify the suspension:
Modifying the vehicle suspension is dangerous. If the vehicle's height or the suspension is modified, the vehicle will be unable to accurately detect a collision or roll-over accident resulting in incorrect or unexpected air bag deployment and the possibility of serious injuries.

To prevent false detection by the air bag sensor system, heed the following:

- *Do not use tires or wheels other than those specified for your Mazda:*
  Use of any tire or wheel other than those specified for your Mazda (page 9-7) is dangerous. Use of such wheels will prevent the vehicle's accident detections system from accurately detecting a collision or roll-over accident resulting in incorrect or unexpected air bag deployment and the possibility of serious injuries.
- *Do not overload your vehicle:*
  Overloading your vehicle is dangerous as it could prevent the air bag crash sensor system from accurately detecting a collision or roll-over accident resulting in incorrect or unexpected air bag deployment and the possibility of serious injuries. The gross axle weight rating (GAWR) and the gross vehicle weight rating (GVWR) for your vehicle are on the Motor Vehicle Safety Standard Label on the driver's door frame. Do not exceed these ratings.
- *Do not drive the vehicle off-road:*
  Driving your Mazda off-road is dangerous because the vehicle has not been designed to do so. Driving the vehicle off-road could prevent the air bag crash sensor system from accurately detecting a collision or roll-over accident resulting in incorrect or unexpected air bag deployment and the possibility of serious injuries.

Do not modify a front door or leave any damage unrepaired. Always have an Authorized Mazda Dealer inspect a damaged front door:
Modifying a front door or leaving any damage unrepaired is dangerous. Each front door has a side crash sensor as a component of the supplemental restraint system. If holes are drilled in a front door, a door speaker is left removed, or a damaged door is left unrepaired, the sensor could be adversely affected causing it to not detect the pressure of an impact correctly during a side collision. If a sensor does not detect a side impact correctly, the side and curtain air bags and the front seat belt pretensioner may not operate normally which could result in serious injury to occupants.

Do not modify the supplemental restraint system:
Modifying the components or wiring of the supplemental restraint system is dangerous. You could accidentally activate it or make it inoperable. Do not make any modifications to the supplemental restraint system. This includes installing trim, badges, or anything else over the air bag modules. It also includes installing extra electrical equipment on or near system components or wiring. An Authorized Mazda Dealer can provide the special care needed in the removal and installation of front seats. It is important to protect the air bag wiring and connections to assure that the bags do not accidentally deploy, and that the front passenger occupant classification system and the seats retain an undamaged air bag connection.

Do not place luggage or other objects under the front seats:
Placing luggage or other objects under the front seats is dangerous. The components essential to the supplemental restraint system could be damaged, and in the event of a side collision, the appropriate air bags may not deploy, which could result in death or serious injury. To prevent damage to the components essential to the supplemental restraint system, do not place luggage or other objects under the front seats.

Do not operate a vehicle with damaged air bag/seat belt pretensioner system components:
Expended or damaged air bag/seat belt pretensioner system components must be replaced after any collision which caused them to deploy or damage them. Only a trained Authorized Mazda Dealer can fully evaluate these systems to see that they will work in any subsequent accident. Driving with an expended or damaged air bag or pretensioner unit will not afford you the necessary protection in the event of any subsequent accident which could result in serious injury or death.

Do not remove interior air bag parts:
Removing any components such as the front seats, front dashboard, the steering wheel or parts on the front and rear window pillars and along the roof edge, containing air bag parts or sensors is dangerous. These parts contain essential air bag components. The air bag could accidentally activate and cause serious injuries. Always have an Authorized Mazda Dealer remove these parts.

Properly dispose of the air bag system:
Improper disposal of an air bag or a vehicle with live air bags in it can be extremely dangerous. Unless all safety procedures are followed, injury could result. Have an Authorized Mazda Dealer safely dispose of the air bag system or scrap an air bag equipped vehicle.

NOTE

- *If it becomes necessary to have the components or wiring system for the supplementary restraint system modified to accommodate a person with certain medical conditions in accordance with a certified physician, contact an Authorized Mazda Dealer, refer to "Customer Assistance (U.S.A.)" (page 8-2).*
- *When an air bag deploys, a loud inflation noise can be heard and some smoke will be released. Neither is likely to cause injury, however, the texture of the air bags may cause light skin injuries on body parts not covered with clothing through friction.*
- *Should you sell your Mazda, we urge you to tell the new owner of its air bag systems and that familiarization with all instructions about them, from the Owner's Manual, is important.*
- *This highly-visible label is displayed which warns against the use of a rear-facing child-restraint system on the front passenger seat.*

(Except Mexico)

(Mexico)

Supplemental Restraint System Components

(With Front Passenger Occupant Classification System)

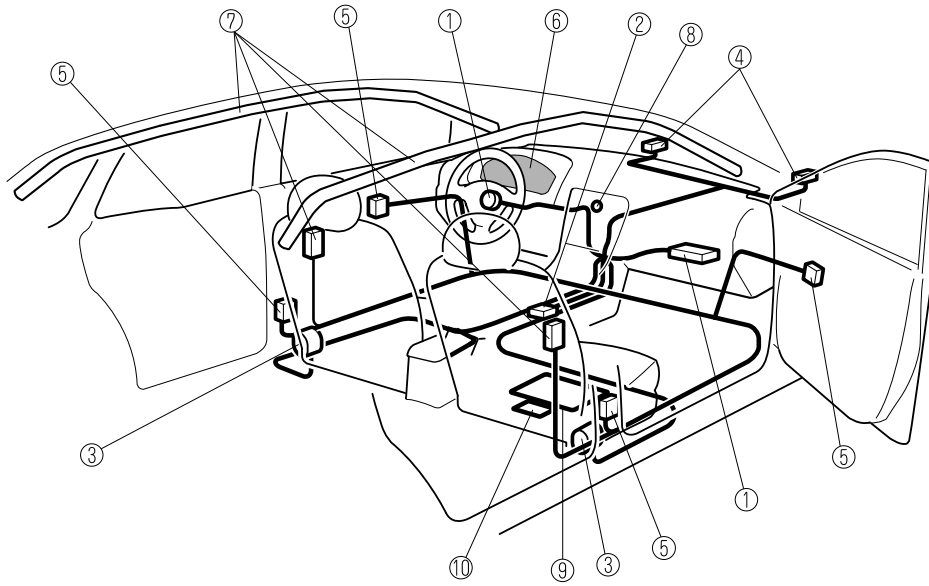

(Without Front Passenger Occupant Classification System)

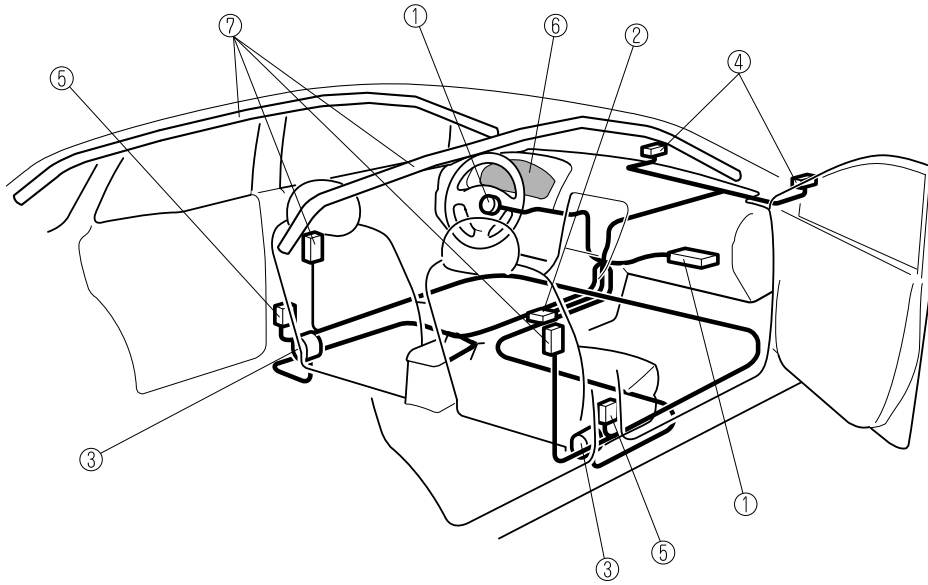

① Driver/Front passenger inflators and air bags
② Roll-over sensor*, crash sensors, and diagnostic module (SAS unit)
③ Seat belt pretensioners (page 2-19)
④ Front air bag sensors
⑤ Side crash sensors*
⑥ Air bag/front seat belt pretensioner system warning light (page 4-24)
⑦ Side and curtain inflators and air bags*
⑧ Front passenger air bag deactivation indicator light* (page 2-61)
⑨ Front passenger occupant classification sensor* (page 2-61)
⑩ Front passenger occupant classification module*

*Some models.

How the SRS Air Bags Work

Your Mazda is equipped with the following types of SRS air bags. SRS air bags are designed to work together with the seat belts to help to reduce injuries during an accident. The SRS air bags are designed to provide further protection for passengers in addition to the seat belt functions. Be sure to wear seat belts properly.

▼ Front Seat Belt Pretensioners

The front seat belt pretensioners are designed to deploy in moderate or severe frontal, near frontal collisions.
In addition, the pretensioners operate when a side collision (only on the side in which the collision occurs) or a roll-over accident is detected. The pretensioners operate differently depending on what types of air bags are equipped. For more details about seat belt pretensioner operation, refer to the SRS Air Bag Deployment Criteria (page 2-58).

▼ Driver Air Bag

The driver's air bag is mounted in the steering wheel.
When air bag crash sensors detect a frontal impact of greater than moderate force, the driver's air bag inflates quickly helping to reduce injury mainly to the driver's head or chest caused by directly hitting the steering wheel.
For more details about air bag deployment, refer to "SRS Air Bag Deployment Criteria" (page 2-58).
(With Front Passenger Occupant Classification System)
The driver's dual-stage air bag controls air bag inflation in two energy stages. During an impact of moderate severity, the driver's air bag deploys with lesser energy, whereas during more severe impacts, it deploys with more energy.

▼ Front Passenger Air Bag

The front passenger air bag is mounted in the front passenger dashboard.
The inflation mechanism for the front passenger air bag is the same as the driver's air bag.
For more details about air bag deployment, refer to "SRS Air Bag Deployment Criteria" (page 2-58).

(With Front Passenger Occupant Classification System)

In addition, the front passenger air bag is designed to only deploy when the front passenger occupant classification sensor detects a passenger sitting on the front passenger's seat. For details, refer to the front passenger occupant classification system (page 2-61).

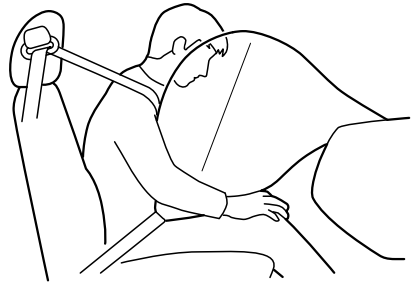

▼ Side Air Bags*

The side air bags are mounted in the outboard sides of the front seatbacks.
When the air bag crash sensors detect a side impact of greater than moderate force, the system inflates the side air bag only on the side in which the vehicle was hit. The side air bag inflates quickly to reduce injury to the driver or front passenger's chest caused by directly hitting interior parts such as a door or window.
For more details about air bag deployment, refer to "SRS Air Bag Deployment Criteria" (page 2-58).
(With Front Passenger Occupant Classification System)
In addition, the front passenger side air bag is designed to only deploy when the front passenger occupant classification sensor detects a passenger sitting on the front passenger's seat. For details, refer to the front passenger occupant classification system (page 2-61).

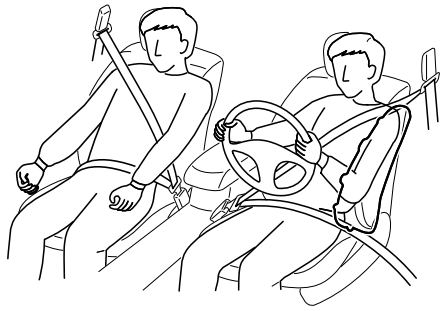

▼ Curtain Air Bags*

The curtain air bags are mounted in the front and rear window pillars, and the roof edge along both sides.
When the air bag crash sensors detect a side impact of greater than moderate force, the curtain air bag inflates quickly and helps to reduce injury mainly to the rear outboard passenger's head caused by directly hitting interior parts such as a door or window.
For more details about air bag deployment, refer to "SRS Air Bag Deployment Criteria" (page 2-58).

 *Some models.

In a side impact:
Greater than moderate impact to one side of the vehicle will cause the curtain air bag on that side only to inflate.

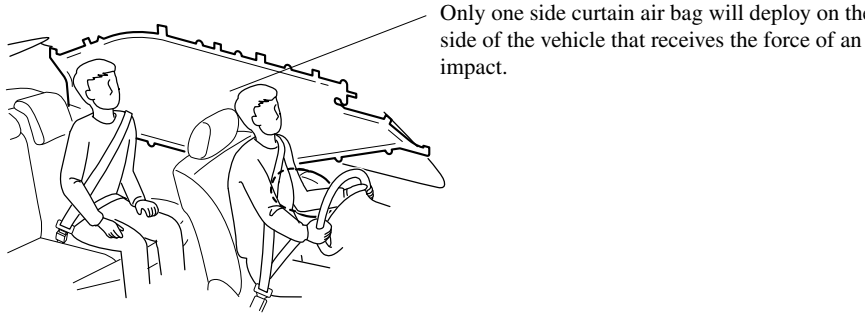

(With Front Passenger Occupant Classification System)
In a roll-over:
In response to a vehicle roll-over, both curtain air bags inflate.

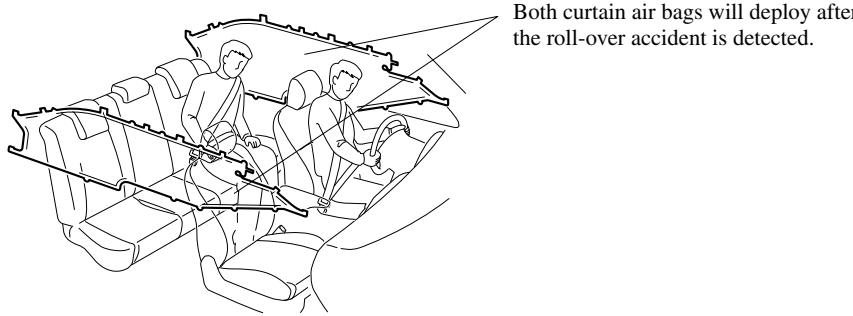

▼ Warning Light/Beep

A system malfunction or operation conditions are indicated by a warning.
Refer to Warning/Indicator Lights on page 4-24.
Refer to Warning Sound is Activated on page 7-43.

SRS Air Bag Deployment Criteria

This chart indicates the applicable SRS equipment that will deploy depending on the type of collision.
(The illustrations are the representative cases of collisions.)

	Types of collision			
	A severe frontal/near frontal collision	A severe side collision*2	A roll-over/near roll-over*3	A rear collision
SRS equipment	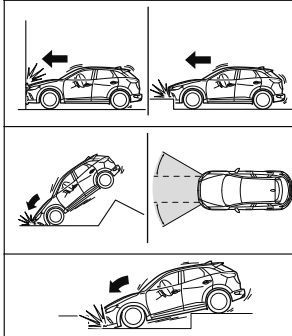	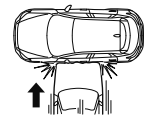	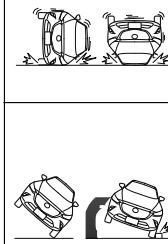	
Front seat belt pretensioner	X*1 (both sides)	X*1 (impact side only)	X*1 (both sides)	No air bag and front seat belt pretensioner will be activated in a rear collision.
Driver air bag	X			
Front passenger air bag	X*1			
Side air bag*		X*1 (impact side only)		
Curtain air bag*		X (impact side only)	X (both sides)	

X: The SRS air bag equipment is designed to deploy in a collision.

*1 **(With Front Passenger Occupant Classification System)**
The front passenger front and side air bags and the seat belt pretensioner are designed to deploy when the front passenger occupant classification sensor detects a passenger sitting on the front passenger's seat.

*2 **(With Side/Curtain Air Bags)**
In a side collision, the seat belt pretensioners and the side/curtain air bags deploy (only on the side in which the collision occurs).

*3 **(With Front Passenger Occupant Classification System)**
In a roll-over accident, the seat belt pretensioners and the curtain air bags deploy.

NOTE
In a frontal offset collision, the equipped air bags and pretensioners may all deploy depending on the direction, angle, and rate of impact.

 *Some models.

Limitations to SRS Air Bag

In severe collisions such as those described previously in "SRS Air Bag Deployment Criteria", the applicable SRS air bag equipment will deploy. However, in some accidents, the equipment may not deploy depending on the type of collision and its severity.

Limitations to front/near front collision detection:
The following illustrations are examples of front/near front collisions that may not be detected as severe enough to deploy the SRS air bag equipment.

Impacts involving trees or poles

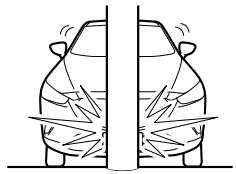

Frontal offset impact to the vehicle

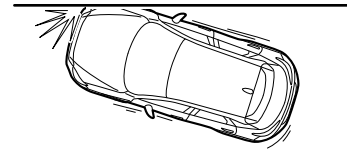

Rear-ending or running under a truck's tail gate

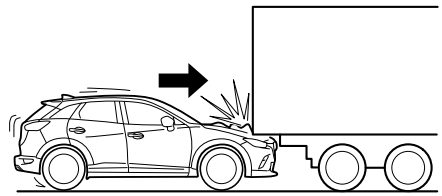

Limitations to side collision detection:
The following illustrations are examples of side collisions that may not be detected as severe enough to deploy the SRS air bag equipment.

Side impacts involving trees or poles

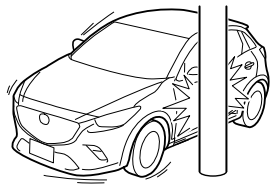

Side impacts with two-wheeled vehicles

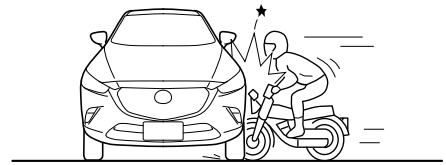

Roll-over (Without Front Passenger Occupant Classification System)

(With Front Passenger Occupant Classification System)
Limitations to roll-over detection:
The following illustration is an example of an accident that may not be detected as a roll-over accident. Therefore, the front seat belt pretensioners and curtain air bags may not deploy.

Pitch end over end

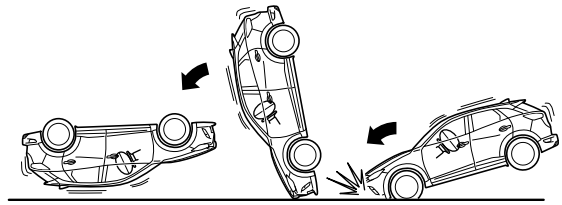

Front Passenger Occupant Classification System*

First, please read "Supplemental Restraint System (SRS) Precautions" (page 2-45) carefully.

▼ Front Passenger Occupant Classification Sensor

Your vehicle is equipped with a front passenger occupant classification sensor as a part of the supplemental restraint system. This sensor is equipped in the front passenger's seat cushion. This sensor measures the electrostatic capacity of the front passenger's seat. The SAS unit is designed to prevent the front passenger front and side air bags and seat belt pretensioner system from deploying if the front passenger air bag deactivation indicator light turns on.
To reduce the chance of injuries caused by deployment of the front passenger air bag, the system deactivates the front passenger front and side air bags and also the seat belt pretensioner system when the front passenger air bag deactivation indicator light turns on. Refer to the following table for the front passenger air bag deactivation indicator light illumination conditions.

This system shuts off the front passenger front and side air bags and seat belt pretensioner system, so make sure the front passenger air bag deactivation indicator light turns on according to the following table.

The air bag/front seat belt pretensioner system warning light flashes and the front passenger air bag deactivation indicator light illuminates if the sensors have a possible malfunction. If this happens, the front passenger front and side air bags and seat belt pretensioner system will not deploy.

Front passenger air bag deactivation indicator light

This indicator light turns on to remind you that the front passenger front and side air bags and seat belt pretensioner will not deploy during a collision.

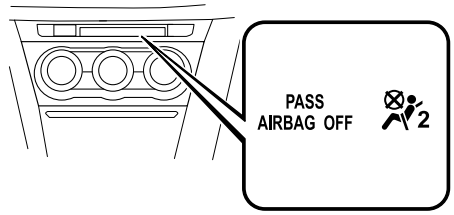

If the front passenger occupant classification sensor is normal, the indicator light turns on when the ignition is switched ON. The light turns off after a few seconds. Then, the indicator light turns on or is off under the following conditions:

*Some models.

Front passenger air bag deactivation indicator light on/off condition chart

Condition detected by the front passenger occupant classification system	Front passenger air bag deactivation indicator light	Front passenger front and side air bags	Front passenger seat belt pretensioner system
Empty (Not occupied)	On	Deactivated	Deactivated
A child less than 1 year old is seated in a child-restraint system	On	Deactivated	Deactivated
Child*1	On or off	Deactivated or ready	Deactivated or ready
Adult*2	Off	Ready	Ready

*1 The occupant classification sensor may not detect a child seated on the seat, in a child-restraint system, or a junior seat depending on the child's physical size and seated posture.
*2 If a smaller adult sits on the front passenger seat, the sensors might detect the person as being a child depending on the person's physique.

The curtain air bag is ready for inflating regardless of what the front passenger air bag deactivation indicator light on/off condition chart indicates.
If the front passenger air bag deactivation indicator light does not turn on when the ignition is switched ON and does not turn on as indicated in the front passenger air bag deactivation indicator light on/off condition chart, do not allow an occupant to sit in the front passenger seat and consult an Authorized Mazda Dealer as soon as possible. The system may not work properly in an accident.

WARNING

Do not allow an occupant in the front passenger's seat to sit with a posture which makes it difficult for the front passenger occupant classification sensor to detect the occupant correctly:
Sitting in the front passenger's seat with a posture which makes it difficult for the front passenger occupant classification sensor to detect the occupant correctly is dangerous. If the front passenger occupant classification sensor cannot detect the occupant sitting on the front passenger's seat correctly, the front passenger front and side air bags and pretensioner system may not operate (non-deploy) or they may operate (deploy) accidentally. The front passenger will not have the supplementary protection of the air bags or the accidental operation (deployment) of the air bags could result in serious injury or death.
Under the following conditions, the front passenger occupant classification sensor cannot detect a passenger sitting on the front passenger's seat correctly and the deployment/non-deployment of the air bags cannot be controlled as indicated in the front passenger air bag deactivation indicator light on/off condition chart. For example:

➢ *A front passenger is seated as shown in the following figure:*

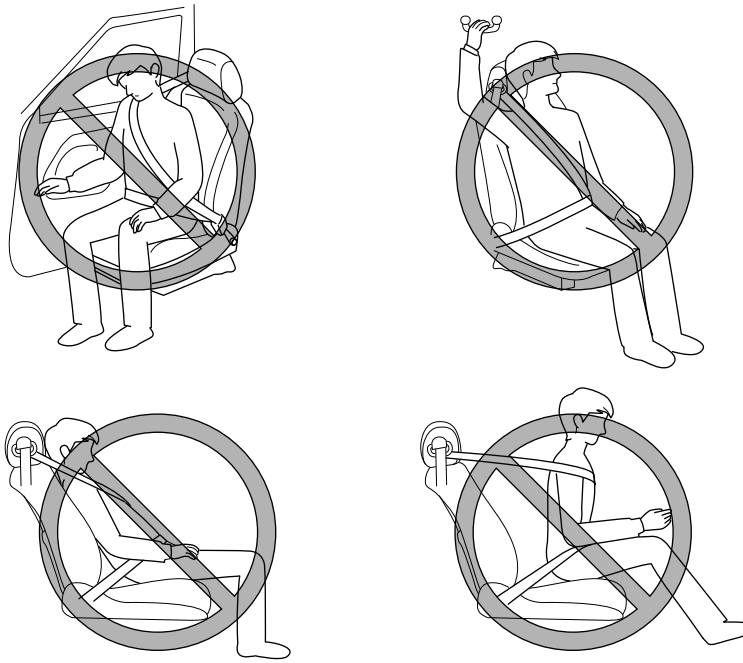

➢ *A rear passenger pushes up on the front passenger seat with their feet.*
➢ *Luggage or other items placed under the front passenger seat or between the front passenger seat and driver seat that push up the front passenger seat bottom.*
➢ *An object, such as a seat cushion, is put on the front passenger's seat or between the passenger's back and the seatback.*
➢ *A seat cover is put on the front passenger's seat.*
➢ *Luggage or other items are placed on the seat with the child in the child-restraint system.*
➢ *A rear passenger or luggage push or pull down on the front passenger seatback.*
➢ *Luggage or other items are placed on the seatback or hung on the head restraint.*
➢ *The seat is washed.*
➢ *Liquids are spilled on the seat.*
➢ *The front passenger seat is moved backward, pushing into luggage or other items placed behind it.*
➢ *The front passenger seatback contacts the rear seat.*
➢ *Luggage or other items are placed between the front passenger seat and driver seat.*
➢ *An electric device is put on the front passenger's seat.*
➢ *An additional electrical device, such as a seat warmer is installed to the surface of the front passenger seat.*

The front passenger front and side air bags and seat belt pretensioner systems will deactivate if the front passenger air bag deactivation indicator light turns on.

CAUTION

- *To assure proper deployment of the front air bag and to prevent damage to the sensor in the front seat cushion:*
  - *Do not place sharp objects on the front seat cushion or leave heavy luggage on them.*
  - *Do not spill any liquids on the front seats or under the front seats.*
- *To allow the sensors to function properly, always perform the following:*
  - *Adjust the front seats as far back as possible and always sit upright against the seatbacks with seat belts worn properly.*
  - *If you place your child on the front passenger seat, secure the child-restraint system properly and slide the front passenger seat as far back as possible (page 2-34).*

NOTE

- *The system requires about 10 seconds to alternate between turning the front passenger front and side air bags and seat belt pretensioner system on or off.*
- *The front passenger air bag deactivation indicator light may turn on repeatedly if luggage or other items are put on the front passenger seat, or if the temperature of the vehicle's interior changes suddenly.*
- *The front passenger air bag deactivation indicator light may turn on for 10 seconds if the electrostatic capacity on the front passenger seat changes.*
- *The air bag/front seat belt pretensioner system warning light might turn on if the front passenger seat receives a severe impact.*
- *If the front passenger air bag deactivation indicator light does not turn on after installing a child-restraint system on the front passenger seat, first, re-install your child-restraint system according to the procedure in this owner's manual. Then, if the front passenger air bag deactivation indicator light still does not turn on, install the child-restraint system on the rear seat and consult an Authorized Mazda Dealer as soon as possible.*
- *If the front passenger air bag deactivation indicator light turns on when an occupant is seated directly in the front passenger seat, have the passenger re-adjust their posture by sitting with their feet on the floor, and then re-fastening the seat belt. If the front passenger air bag deactivation indicator light remains turned on, move the passenger to the rear seat. If sitting in the rear seat is not possible, slide the front passenger seat as far back as possible. Consult an Authorized Mazda Dealer as soon as possible.*

Constant Monitoring

The following components of the air bag systems are monitored by a diagnostic system:

- Front air bag sensors
- Crash sensors, and diagnostic module (SAS unit)
- Side crash sensors
- Air bag modules
- Front seat belt pretensioners
- Air bag/Front seat belt pretensioner system warning light
- Related wiring

(With Front Passenger Occupant Classification System)

- Front passenger occupant classification sensor
- Front passenger occupant classification module
- Front passenger air bag deactivation indicator light

The diagnostic module continuously monitors the system's readiness. This begins when the ignition is switched ON and continues while the vehicle is being driven.

MEMO

3 Before Driving

Use of various features, including keys, doors, mirrors and windows.

Keys..... 3-2
Keys.....3-2
Keyless Entry System.....3-3

Advanced Keyless Entry System.....3-9
Advanced Keyless Entry System*..... 3-9
Operational Range..... 3-10

Doors and Locks..... 3-11
Door Locks..... 3-11
Liftgate..... 3-20

Fuel and Emission..... 3-24
Fuel and Engine Exhaust Precautions..... 3-24
Fuel-Filler Lid and Cap..... 3-27

Steering Wheel.....3-29
Steering Wheel..... 3-29

Mirrors..... 3-31
Mirrors.....3-31

Windows.....3-33
Power Windows.....3-33
Moonroof*..... 3-36

Security System..... 3-39
Modification and Add-On Equipment.....3-39
Immobilizer System.....3-39
Theft-Deterrent System*.....3-41

Driving Tips..... 3-43
Break-In Period..... 3-43
Saving Fuel and Protection of the Environment..... 3-43
Hazardous Driving.....3-44
Floor Mat.....3-44
Rocking the Vehicle.....3-45
Winter Driving.....3-45
Driving In Flooded Area..... 3-47
Overloading..... 3-48
Driving on Uneven Road.....3-49

Towing..... 3-50
Trailer Towing..... 3-50
Recreational Towing.....3-50

*Some models.

Keys

WARNING

Do not leave the key in your vehicle with children and keep them in a place where your children will not find or play with them:
Leaving children in a vehicle with the key is dangerous. This could result in someone being badly injured or even killed. Children may find these keys to be an interesting toy to play with and could cause the power windows or other controls to operate, or even make the vehicle move.

CAUTION

- *Because the key (transmitter) uses low-intensity radio waves, it may not function correctly under the following conditions:*
  - *The key is carried with communication devices such as cellular phones.*
  - *The key contacts or is covered by a metal object.*
  - *The key is near electronic devices such as personal computers.*
  - *Non-Mazda genuine electronic equipment is installed in the vehicle.*
  - *There is equipment which discharges radio waves near the vehicle.*
- *The key (transmitter) may consume battery power excessively if it receives high-intensity radio waves. Do not place the key near electronic devices such as televisions or personal computers.*
- *To avoid damage to the key (transmitter), DO NOT:*
  - *Drop the key.*
  - *Get the key wet.*
  - *Disassemble the key.*
  - *Expose the key to high temperatures on places such as the dashboard or hood, under direct sunlight.*
  - *Expose the key to any kind of magnetic field.*
  - *Place heavy objects on the key.*
  - *Put the key in an ultrasonic cleaner.*
  - *Put any magnetized objects close to the key.*

A code number is stamped on the plate attached to the key set; detach this plate and store it in a safe place (not in the vehicle) for use if you need to make a replacement key (auxiliary key).
Also write down the code number and keep it in a separate safe and convenient place, but not in the vehicle.

If your key (auxiliary key) is lost, consult your Authorized Mazda Dealer and have your code number ready.

NOTE
The driver must carry the key to ensure the system functions properly.

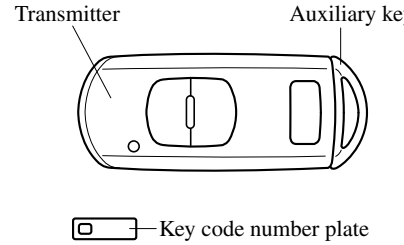

To use the auxiliary key, pull out the auxiliary key from the transmitter while pressing the knob.

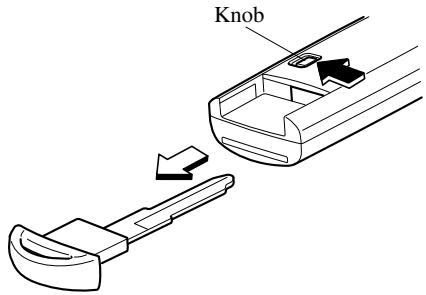

Keyless Entry System

This system uses the key buttons to remotely lock and unlock the doors and the liftgate.
The system can start the engine without having to take the key out of your purse or pocket.
It can also help you signal for attention or help.
Operating the theft-deterrent system is also possible on theft-deterrent system-equipped vehicles.

System malfunctions or warnings are indicated by the following warning lights or beeps.

- KEY Warning Light (Red)
  Refer to Contact Authorized Mazda Dealer and Have Vehicle Inspected on page 7-30.
  Refer to Taking Action on page 7-34.
- Ignition Not Switched Off (STOP) Warning Beep
  Refer to Ignition Not Switched Off (STOP) Warning Beep on page 7-44.
- Key Removed from Vehicle Warning Beep
  Refer to Key Removed from Vehicle Warning Beep on page 7-44.

If you have a problem with the key, consult an Authorized Mazda Dealer.

If your key is lost or stolen, consult an Authorized Mazda Dealer as soon as possible for a replacement and to make the lost or stolen key inoperative.

⚠ CAUTION

Radio equipment like this is governed by laws in the United States.
Changes or modifications not expressly approved by the party responsible for compliance could void the user's authority to operate the equipment.

NOTE

- *The keyless entry system operation may vary due to local conditions.*
- *The keyless entry system is fully operational (door/liftgate lock/unlock) when the ignition is switched off. The system does not operate if the ignition is switched to any position other than off.*
- *If the key does not operate when pressing a button or the operational range becomes too small, the battery may be weak. To install a new battery, refer to Key Battery Replacement (page 6-34).*
- *Battery life is about 1 year. Replace the battery with a new one if the KEY indicator light (green) flashes in the instrument cluster. Replacing the battery about once a year is recommended because the KEY warning light/ indicator light may not illuminate or flash depending on the rate of battery depletion.*

- *Additional keys can be obtained at an Authorized Mazda Dealer. Up to 6 keys can be used with the keyless functions per vehicle. Bring all keys to an Authorized Mazda Dealer when additional keys are required.*

▼ Transmitter

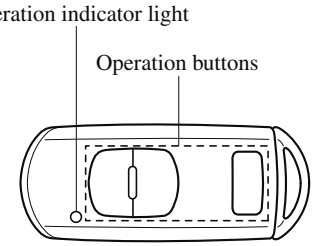

NOTE

- *The headlights turn on/off by operating the transmitter. Refer to Leaving Home Light on page 4-47.*
- ***(With theft-deterrent system)***
  The hazard warning lights flash when the theft-deterrent system is armed or turned off.
  Refer to Theft-Deterrent System on page 3-41.
- ***(With the advanced keyless function)***
  A beep sound can be heard for confirmation when the doors and the liftgate are locked/unlocked using the key. If you prefer, the beep sound can be turned off.
  The volume of the beep sound can also be changed.
  Refer to Personalization Features on page 9-9.

Use the following procedure to change the setting.

1. *Switch the ignition off and close all of the doors and the liftgate.*

2. *Open the driver's door.*
3. *Within 30 seconds of opening the driver's door, press and hold the LOCK button on the key for 5 seconds or longer (All of the doors and the liftgate are locked and unlocked when the LOCK button on the key is pressed and held for 5 seconds.).*
   The beep sound activates at the currently set volume. The setting changes each time the LOCK button on the key is pressed and the beep sound activates at the set volume. (If the beep sound has been set to not activate, it will not activate.)
4. *The setting change is completed by doing any one of the following:*
   - *Switching the ignition to ACC or ON.*
   - *Closing the driver's door.*
   - *Opening the liftgate.*
   - *Not operating the key for ten seconds.*
   - *Pressing any button except the LOCK button on the key.*
   - *Pressing a request switch.*

The operation indicator light flashes when the buttons are pressed.

Lock button

To lock the doors and the liftgate, press the lock button and the hazard warning lights will flash once.
(With the advanced keyless function)
A beep sound will be heard once.

To confirm that all doors and the liftgate have been locked, press the lock button again within 5 seconds. If they are closed and locked, the horn will sound.

NOTE

- *The doors and the liftgate can be locked by pressing the lock button while any other door or the liftgate is open. The hazard warning lights will not flash. When the lock button is pressed while any door is open and then the door is closed, all the doors and the liftgate are locked.*
- *Confirm that all doors and the liftgate are locked visually or audibly by use of the double click.*
- *Make sure all doors and the liftgate are locked after pressing the button.*
- ***(With theft-deterrent system)***
  When the doors are locked by pressing the lock button on the key while the theft-deterrent system is armed, the hazard warning lights will flash once to indicate that the system is armed.

Unlock button

To unlock the driver's door, press the unlock button and the hazard warning lights will flash twice.
(With the advanced keyless function)
A beep sound will be heard twice.

To unlock all doors and the liftgate, press the unlock button again within three seconds and two more beep sounds will be heard.

NOTE

- *The system can be set to unlock all doors by performing a single operation. Refer to Personalization Features on page 9-9.*
  Use the following procedure to change the setting.
  1. *Switch the ignition off and close all of the doors and the liftgate.*
  2. *Open the driver's door.*
  3. *Within 30 seconds of opening the driver's door, press and hold the UNLOCK button on the key for 5 seconds or longer (the sound of the doors locking/unlocking can be heard).*
     After this, the system switches the setting each time the UNLOCK button is pressed (the sound of the doors locking/unlocking can be heard).
  4. *The setting change is completed by doing any one of the following:*
     - *Switching the ignition to ACC or ON.*
     - *Closing the driver's door.*
     - *Opening the liftgate.*
     - *Not operating the key for ten seconds.*
     - *Pressing any button except the UNLOCK button on the key.*
     - *Pressing a request switch.*
- ***(Auto re-lock function)***
  After unlocking with the key, all doors and the liftgate will automatically lock if any of the following operations are not performed within about 60 seconds. If your vehicle has a theft-deterrent system, the hazard warning lights will flash for confirmation.
  The time required for the doors to lock automatically can be changed.
  Refer to Personalization Features on page 9-9.
  - *A door or the liftgate is opened.*
  - *The ignition is switched to any position other than off.*
- ***(With theft-deterrent system)***
  When the doors are unlocked by pressing the unlock button on the key while the theft-deterrent system is turned off, the hazard warning lights will flash twice to indicate that the system is turned off.

Panic button

If you witness from a distance someone attempting to break into or damage your vehicle, press and hold the panic button to activate the vehicle's alarm. Call emergency services if necessary.

NOTE
The panic button will work whether any door or the liftgate is open or closed.

(Turning on the alarm)

Pressing the panic button for 1 second or more will trigger the alarm for about 2 minutes and 30 seconds, and the following will occur:

- The horn sounds intermittently.
- The hazard warning lights flash.

(Turning off the alarm)

The alarm stops by pressing any button on the key.

▼ Operational Range

The system operates only when the driver is in the vehicle or within operational range while the key is being carried.

Starting the Engine

NOTE

- *Starting the engine may be possible even if the key is outside of the vehicle and extremely close to a door and window, however, always start the engine from the driver's seat.*
  If the vehicle is started and the key is not in the vehicle, the vehicle will not restart after it is shut off and the ignition is switched to off.
- *The luggage compartment is out of the assured operational range, however, if the key (transmitter) is operable the engine will start.*

With the advanced keyless function

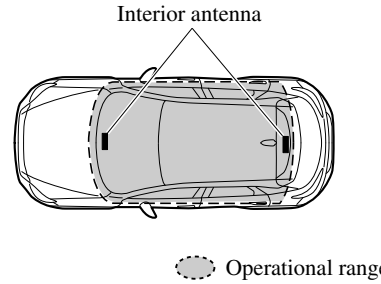

Without the advanced keyless function

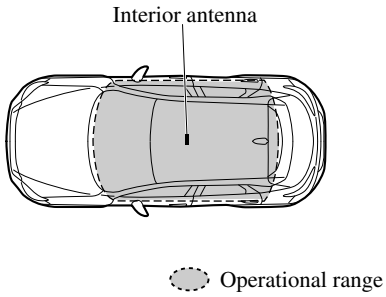

NOTE
The engine may not start if the key is placed in the following areas:

- *Around the dashboard*
- *In the storage compartments such as the glove compartment or the center console*

▼ Key Suspend Function

If a key is left in the vehicle, the functions of the key left in the vehicle are temporarily suspended to prevent theft of the vehicle.
To restore the functions, press the unlock button on the functions-suspended key in the vehicle.

Advanced Keyless Entry System*

WARNING

Radio waves from the key may affect medical devices such as pacemakers:
Before using the key near people who use medical devices, ask the medical device manufacturer or your physician if radio waves from the key will affect the device.

The advanced keyless function allows you to lock/unlock the door and the liftgate, or open the liftgate while carrying the key.

System malfunctions or warnings are indicated by the following warning beeps.

- Request switch Inoperable Warning Beep
  Refer to Request Switch Inoperable Warning Beep (With the advanced keyless function) on page 7-45.
- Key Left-in-luggage Compartment Warning Beep
  Refer to Key Left-in-luggage Compartment Warning Beep (With the advanced keyless function) on page 7-45.
- Key Left-in-vehicle Warning Beep
  Refer to Key Left-in-vehicle Warning Beep (With the advanced keyless function) on page 7-45.

NOTE
The advanced keyless entry system functions can be deactivated to prevent any possible adverse effect on a user wearing a pacemaker or other medical device. If the system is deactivated, you will be unable to start the engine by carrying the key. Consult an Authorized Mazda Dealer for details. If the advanced keyless entry system has been deactivated, you can start the engine by following the procedure indicated when the key battery goes dead.
Refer to Engine Start Function When Key Battery is Dead on page 4-8.

*Some models.

Operational Range

The system operates only when the driver is in the vehicle or within operational range while the key is being carried.

NOTE
When the battery power is low, or in places where there are high-intensity radio waves or noise, the operational range may become narrower or the system may not operate. For determining battery replacement, Refer to Keyless Entry System on page 3-3.

▼ Locking, Unlocking the Doors and the Liftgate

Lock

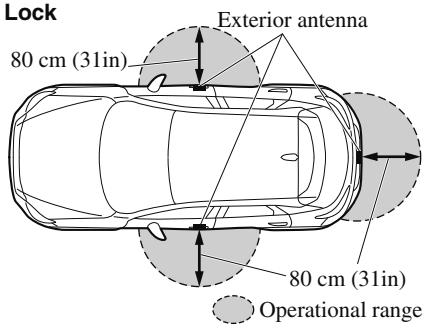

Unlock

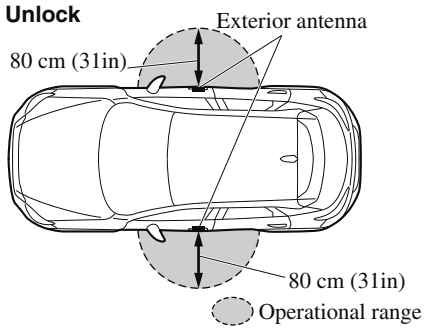

NOTE

- *The system may not operate if you are too close to the windows or door handles, or liftgate.*
- *If the key is left in the following areas and you leave the vehicle, the doors may be locked depending on the radio wave conditions even if the key is left in the vehicle.*
  - *Around the dashboard*
  - *In the storage compartments such as the glove compartment or the center console*
  - *Next to a communication device such as a mobile phone*

▼ Opening the Liftgate

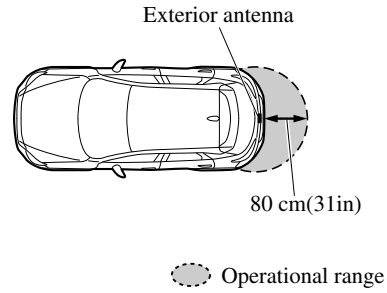

Door Locks

WARNING

Always take all children and pets with you or leave a responsible person with them:
Leaving a child or a pet unattended in a parked vehicle is dangerous. In hot weather, temperatures inside a vehicle can become high enough to cause brain damage or even death.

Do not leave the key in your vehicle with children and keep them in a place where your children will not find or play with them:
Leaving children in a vehicle with the key is dangerous. This could result in someone being badly injured or even killed.

Keep all doors locked when driving:
Unlocked doors in a moving vehicle are dangerous. Passengers can fall out if a door is accidentally opened and can more easily be thrown out in an accident.

Always close all the windows and moonroof, lock the doors and the liftgate and take the key with you when leaving your vehicle unattended:
Leaving your vehicle unlocked is dangerous as children could lock themselves in a hot vehicle, which could result in death. Also, a vehicle left unlocked becomes an easy target for thieves and intruders.

After closing the doors and the liftgate, always verify that they are securely closed:
Doors and the liftgate not securely closed are dangerous, if the vehicle is driven with a door and the liftgate not securely closed, the door and the liftgate could open unexpectedly resulting in an accident.

Always confirm the safety around the vehicle before opening a door and the liftgate:
Suddenly opening a door and the liftgate is dangerous. A passing vehicle or a pedestrian could be hit and cause an accident.

CAUTION

- *Always confirm the conditions around the vehicle before opening/closing the doors and the liftgate and use caution during strong winds or when parked on an incline. Not being aware of the conditions around the vehicle is dangerous because fingers could get caught in the door and the liftgate or a passing pedestrian could be hit, resulting in an unexpected accident or injury.*

NOTE

- *Always stop the engine and lock the doors. In addition, to prevent theft of valuables, do not leave them inside the cabin.*
- *If the key is left in the following areas and you leave the vehicle, the doors may be locked depending on the radio wave conditions even if the key is left in the vehicle.*
  - *Around the dashboard*
  - *In the storage compartments such as the glove compartment or the center console*
  - *Next to a communication device such as a mobile phone*
- *When the ignition is switched to ACC or ON, the vehicle lock-out prevention feature prevents you from locking yourself out of the vehicle.*
  All doors and the liftgate will automatically unlock if they are locked using the power door locks with any door or the liftgate open.
  The vehicle lock-out prevention feature does not operate while the ignition is switched off.
  When all doors and the liftgate are locked using the power door lock with any door or the liftgate open, the closed doors and the liftgate are locked. After that, when all doors and the liftgate are closed, all doors and the liftgate are locked. However, if the key is inside the vehicle, all doors and the liftgate are automatically unlocked.
  (With the advanced keyless function)
  The beep sound is heard for about 10 seconds to notify the driver that the key has been left in the vehicle.
  (Without the advanced keyless function)
  The horn sound is heard twice to notify the driver that the key has been left in the vehicle.
- ***(Door unlock (control) system with collision detection)***
  This system automatically unlocks the doors and the liftgate in the event the vehicle is involved in an accident to allow passengers to get out of the vehicle immediately and prevent being trapped inside. While the ignition is switched ON and in the event the vehicle receives an impact strong enough to inflate the air bags, all the doors and the liftgate are automatically unlocked after about 6 seconds have elapsed from the time of the accident.
  The doors and the liftgate may not unlock depending on how an impact is applied, the force of the impact, and other conditions of the accident.
  If door-related systems or the battery is malfunctioning, the doors and the liftgate will not unlock.

▼ Locking, Unlocking with Auxiliary Key

Turn the auxiliary key toward the front to lock, toward the back to unlock.

To lock

All doors and the liftgate lock automatically when the driver's door is locked using the auxiliary key.

To unlock

The driver’s door unlocks when the auxiliary key is turned briefly to the unlock position and then immediately returned to the center position.
All doors and the liftgate unlock when the driver's door is unlocked and the auxiliary key is held in the unlock position for one second or longer.

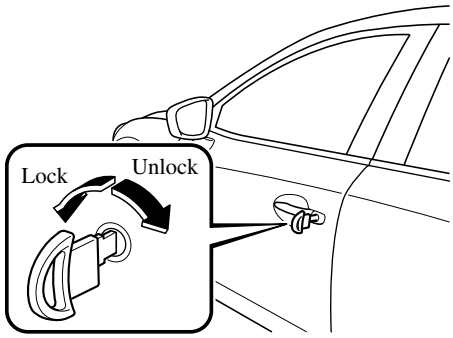

▼ Locking, Unlocking with Request Switch (With the advanced keyless function)

All doors and the liftgate can be locked/unlocked by pressing the request switch on the front doors while the key is being carried.

The request switch on the liftgate can only be used to lock all doors and the liftgate.

Front doors

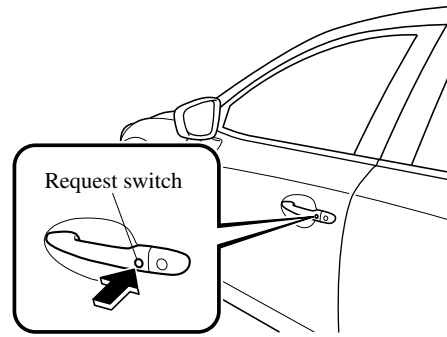

Liftgate (Lock only)

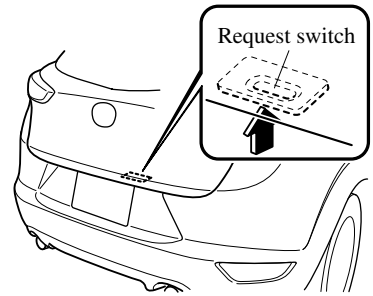

To lock

To lock the doors and the liftgate, press the request switch and the hazard warning lights will flash once.
A beep sound will be heard once.

To unlock

Driver's door request switch

To unlock the driver's door, press the request switch. A beep sound will be heard twice and the hazard warning lights will flash twice.
To unlock all doors and the liftgate, press the request switch again within three seconds and two more beep sounds will be heard.

Front passenger door request switch

To unlock all doors and the liftgate, press the request switch. A beep sound will be heard twice and the hazard warning lights will flash twice.

NOTE

- *The system can be set to unlock all doors by performing a single operation. Refer to Personalization Features on page 9-9.*
  Use the following procedure to change the setting.
  1. *Switch the ignition off and close all of the doors and the liftgate.*
  2. *Open the driver's door.*
  3. *Within 30 seconds of opening the driver's door, press and hold the UNLOCK button on the key for 5 seconds or longer (the sound of the doors locking/unlocking can be heard).*
     After this, the system switches the setting of pressing the driver's request switch once or twice to unlock all doors and the liftgate each time the UNLOCK button is pressed (the sound of the doors locking/unlocking can be heard).
  4. *The setting change is completed by doing any one of the following:*
     - *Switching the ignition to ACC or ON.*
     - *Closing the driver's door.*
     - *Opening the liftgate.*
     - *Not operating the key for ten seconds.*
     - *Pressing any button except the UNLOCK button on the key.*
     - *Pressing a request switch.*
- *Confirm that all doors and the liftgate are securely locked.*
  For the liftgate, move it without pressing the electric liftgate opener to verify that the liftgate has not been left ajar.
- *All doors and the liftgate cannot be locked when any door or the liftgate is open.*
- *It may require a few seconds for the doors to unlock after the request switch is pressed.*
- *A beep sound is heard for confirmation when the doors and the liftgate are locked/unlocked using the request switch. If you prefer, the beep sound can be turned off.*

The volume of the beep sound can also be changed. Refer to Personalization Features on page 9-9.
Use the following procedure to change the setting.

1. *Switch the ignition off and close all of the doors and the liftgate.*
2. *Open the driver's door.*
3. *Within 30 seconds of opening the driver's door, press and hold the LOCK button on the key for 5 seconds or longer (All of the doors and the liftgate are locked and unlocked when the LOCK button on the key is pressed and held for 5 seconds.).*
   The beep sound activates at the currently set volume. The setting changes each time the LOCK button on the key is pressed and the beep sound activates at the set volume. (If the beep sound has been set to not activate, it will not activate.)
4. *The setting change is completed by doing any one of the following:*
   - *Switching the ignition to ACC or ON.*
   - *Closing the driver's door.*
   - *Opening the liftgate.*
   - *Not operating the key for ten seconds.*
   - *Pressing any button except the LOCK button on the key.*
   - *Pressing a request switch.*

- ***(With theft-deterrent system)***
  The hazard warning lights flash when the theft-deterrent system is armed or turned off.
  Refer to Theft-Deterrent System on page 3-41.
- *The setting can be changed so that the doors and the liftgate are locked automatically without pressing the request switch.*
  Refer to Personalization Features on page 9-9.
  (Walk-away auto lock function)
  A beep sound is heard when all doors and the liftgate are closed while the advanced key is being carried. All doors and the liftgate are locked automatically after about three seconds when the advanced key is out of the operational range. Also, the hazard warning lights flash once. (Even if the driver is in the operational range, all doors and the liftgate are locked automatically after about 30 seconds.) If you are out of the operational range before the doors and the liftgate are completely closed or another key is left in the vehicle, the walk-away auto lock function will not work. Always make sure that all doors and the liftgate are closed and locked before leaving the vehicle. The walk-away auto lock function does not close the power windows.
- ***(Auto re-lock function)***
  After unlocking with the request switch, all doors and the liftgate will automatically lock if any of the following operations are not performed within about 60 seconds. If your vehicle has a theft-deterrent system, the hazard warning lights will flash for confirmation.

The time required for the doors to lock automatically can be changed.
Refer to Personalization Features on page 9-9.

- *Opening a door or the liftgate.*
- *Switching the ignition to any position other than off.*

▼ Locking, Unlocking with Transmitter

All doors and the liftgate can be locked/unlocked by operating the keyless entry system transmitter, refer to Keyless Entry System (page 3-3).

▼ Locking, Unlocking with Door-Lock Switch

All doors and the liftgate lock automatically when the lock side is pressed. They unlock when the unlock side is pressed.

Driver's door

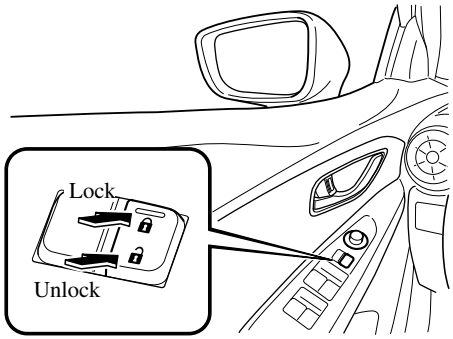

Front passenger's door

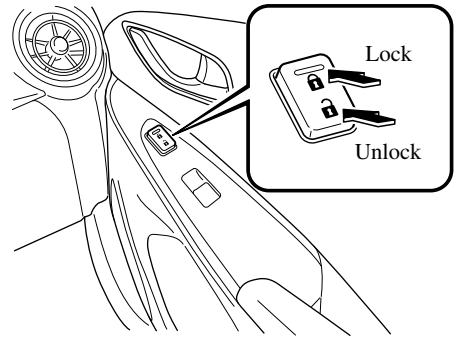

To lock all the doors and the liftgate from an open front door, press the lock side of the door lock switch and then close the door.

NOTE
When locking the doors this way, be careful not to leave the key inside the vehicle.

▼ Auto Lock/Unlock Function

⚠ WARNING

Do not pull the inner handle on a front door:
Pulling the inner handle on a front door while the vehicle is moving is dangerous. Passengers can fall out of the vehicle if the door opens accidentally , which could result in death or serious injury.

- When the vehicle speed exceeds 20 km/h (12 mph), all doors and the liftgate lock automatically.
- When the ignition is switched off, all doors and the liftgate unlock automatically.

These functions can also be disabled so that they do not operate.

Auto lock/unlock function setting change using door-lock switch

The doors and the liftgate can be set to lock or unlock automatically by selecting any one of the functions from the following table and using the driver's door-lock switch on the interior door panel.

NOTE

- *Function number 3 in the following table is the factory setting for your vehicle.*
- *There are only a total of six auto lock/unlock settings available for automatic transaxle vehicles, and three for manual transaxle vehicles. Be sure to press the unlock side of the driver's door-lock switch the correct number of times according to the selected function number. If the switch is mistakenly pressed seven times on an automatic transaxle vehicle or four times on a manual transaxle, the procedure will be cancelled. If this occurs, start the procedure from the beginning.*

Function number	Function*1
1	The auto door-lock function is disabled.
2	All the doors and the liftgate lock automatically when the vehicle speed is about 20 km/h (12 mph) or more.
3 (Factory Setting)	All the doors and the liftgate lock automatically when the vehicle speed is about 20 km/h (12 mph) or more. All the doors and the liftgate unlock when the ignition is switched from ON to Off.
4	**(Automatic transaxle vehicles only)** When the ignition is switched ON and the selector lever is shifted from park (P) to any other gear position, all the doors and the liftgate lock automatically.
5	**(Automatic transaxle vehicles only)** When the ignition is switched ON and the selector lever is shifted from park (P) to any other gear position, all the doors and the liftgate lock automatically. When the selector lever is shifted to park (P) while the ignition is switched ON, all the doors and the liftgate unlock automatically.
6	**(Automatic transaxle vehicles only)** All the doors and the liftgate lock automatically when the vehicle speed is about 20 km/h (12 mph) or more. When the selector lever is shifted to park (P) while the ignition is switched ON, all the doors and the liftgate unlock automatically.

*1 Other settings for the auto door lock function are available at an Authorized Mazda Dealer. For details consult an Authorized Mazda Dealer. Refer to Personalization Features on page 9-9.

Settings can be changed using the following procedure.

1. Safely park the vehicle. All doors and the liftgate must remain closed.
2. Switch the ignition ON.
3. Press and hold the lock side of the driver's door-lock switch within 20 seconds of switching the ignition ON, and make sure a beep sound is heard about eight seconds afterwards.

4. Refer to the auto lock/unlock function setting table, determine the function number for the desired setting. Press the unlock side of the driver's door-lock switch the same number of times as the selected function number (Ex. If you select function 2, press the unlock side of the switch only 2 times).
5. Three seconds after the function setting has been changed, a beep sound will beep in the amount of the selected function number. (Ex. Function number 3 = 3 beep sounds)

(Manual transaxle vehicles)

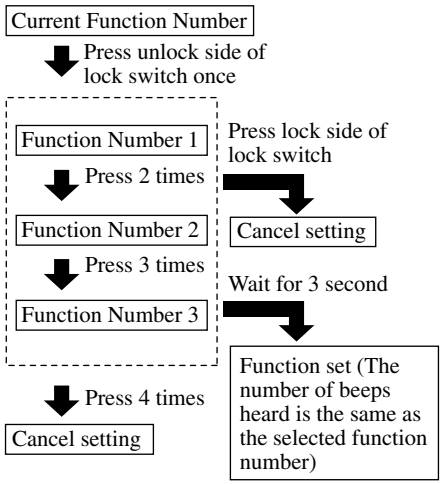

(Automatic transaxle vehicles)

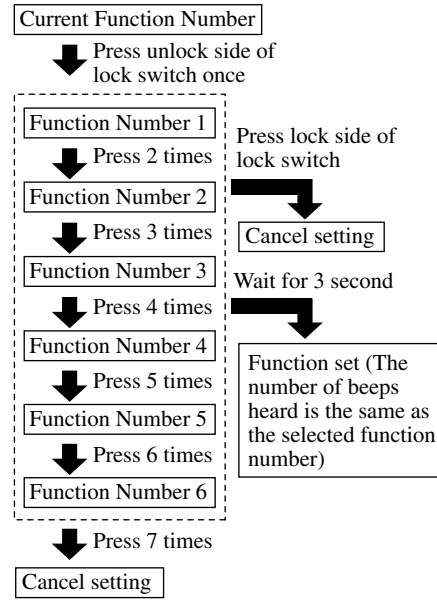

NOTE

- *The doors and the liftgate cannot be locked or unlocked while the setting function is being performed.*
- *The procedure can be cancelled by pressing the lock side of the driver's door-lock switch.*

▼ Locking, Unlocking with Door-Lock Knob

Operation from inside

To lock any door from the inside, press the door-lock knob.
To unlock, pull it outward.

This does not operate the other door locks.

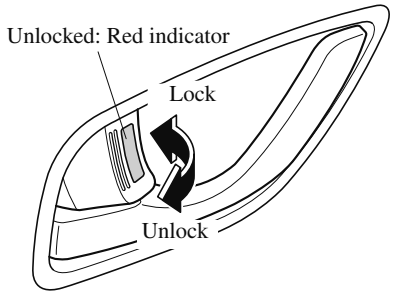

Operation from outside

To lock any door using its door-lock knob from the outside, press the door-lock knob to the lock position and close the door (holding the door handle in the open position is not required).
This does not operate the other door locks.

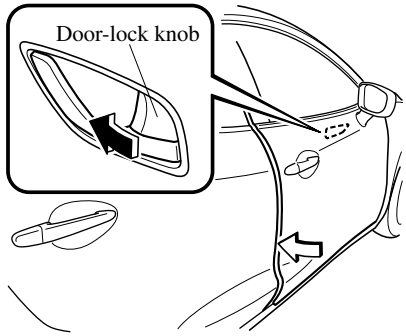

NOTE
When locking the door this way:

- *Be careful not to leave the key inside the vehicle.*
- *The doors cannot be locked using the driver's door lock knob if any door is open when the ignition is switched to ACC or ON.*

▼ Rear Door Child Safety Locks

These locks are intended to help prevent children from accidentally opening the rear doors. Use them on both rear doors whenever a child rides in the rear seat of the vehicle.

If you slide the child safety lock to the lock position before closing that door, the door cannot be opened from the inside. The door can only be opened by pulling the outside handle.

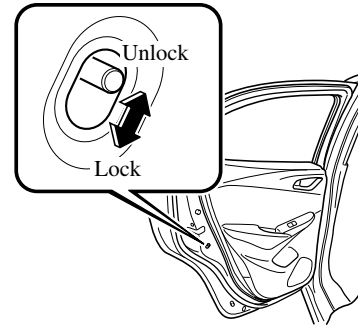

Liftgate

WARNING

Never allow a person to ride in the luggage compartment:
Allowing a person to ride in the luggage compartment is dangerous. The person in the luggage compartment could be seriously injured or killed during sudden braking or a collision.

Do not drive with the liftgate open:
Exhaust gas in the cabin of a vehicle is dangerous. An open liftgate in a moving vehicle will cause exhaust gas to be drawn into the cabin. This gas contains CO (carbon monoxide), which is colorless, odorless, and highly poisonous, and it can cause loss of consciousness and death. Moreover, an open liftgate could cause occupants to fall out in an accident.

Do not stack or leave loaded luggage unsecured in the luggage compartment:
Otherwise, the luggage may move or collapse, resulting in injury or an accident. In addition, do not load luggage higher than the seatbacks. It may affect the side or rear field of view.

CAUTION

- *Before opening the liftgate, remove any snow and ice accumulation on it. Otherwise, the liftgate could close under the weight of the snow and ice resulting in injury.*
- *Be careful when opening/closing the liftgate during strong winds. If a strong gust blows against the liftgate, it could close suddenly resulting in injury.*
- *Fully open the liftgate and make sure that it stays open. If the liftgate is only opened partially, it could slam shut by vibration or wind gusts resulting in injury.*
- *When loading or unloading luggage in the luggage compartment, turn off the engine. Otherwise, you could get burned by the heat of the exhaust gas.*
- *Be careful not to apply excessive force to the damper stay on the liftgate such as by putting your hand on the stay. Otherwise, the damper stay may bend and affect the liftgate operation.*

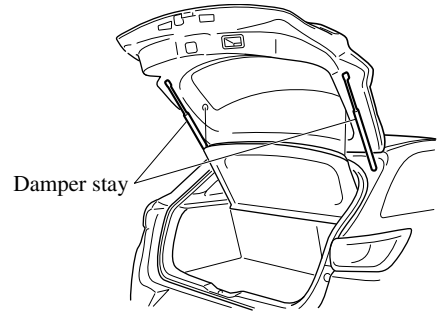

- *Do not modify or replace the liftgate damper stay. Consult an Authorized Mazda Dealer if a liftgate damper stay is deformed or damaged for reasons such as a collision or if there is some other problem.*

▼ Opening and Closing the Liftgate

Opening the liftgate with Electric liftgate opener

Unlock the doors and liftgate, then press the electric liftgate opener on the liftgate and raise the liftgate when the latch releases.

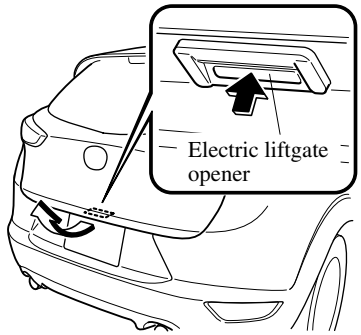

NOTE
(With the advanced keyless function)

- *A locked liftgate can also be opened while the key is being carried.*
- *When opening the liftgate with the doors and the liftgate locked, it may require a few seconds for the liftgate latch to release after the electric liftgate opener is pressed.*
- *The liftgate can be closed when the doors are locked with the key left in the vehicle. However, to prevent locking the key in the vehicle, the liftgate can be opened by pressing the electric liftgate opener. If the liftgate cannot be opened despite doing this procedure, first push the liftgate completely closed, then press the electric liftgate opener to fully open the liftgate.*
- *When the liftgate latch is released by pressing the electric liftgate opener, the liftgate raises slightly. If the liftgate is not operated for a certain period of time, the liftgate cannot be raised.*
  To open
  Press the electric liftgate opener again.
  To close
  To close the liftgate from its slightly raised position, open it first by pressing the electric liftgate opener, then close it after waiting at least 1 second.
- *If the liftgate is not fully closed, the driver is notified by a warning indicated in the instrument cluster.*
- *If the vehicle battery is dead or there is a malfunction in the electrical system and the liftgate cannot be unlocked, the liftgate can be opened by performing the emergency procedure.*
  Refer to When Liftgate Cannot be Opened on page 7-48.

Closing the liftgate

CAUTION

(With luggage board)
When closing the liftgate, return the luggage board to its original position. If the liftgate is closed with the luggage board standing upright, the luggage compartment cover could be damaged.

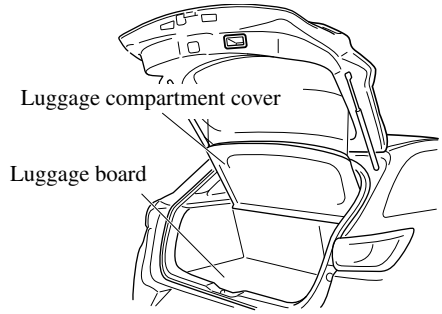

Lower the liftgate slowly using the liftgate grip recess, then push the liftgate closed using both hands.
Do not slam it. Pull up on the liftgate to make sure it is secure.

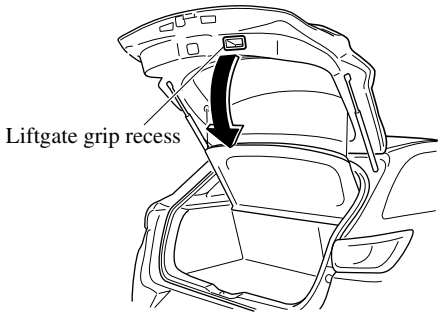

NOTE
Confirm that the liftgate is securely closed. The liftgate, move it without pressing the electric liftgate opener to verify that the liftgate has not been left ajar.

▼ Luggage Compartment

Luggage compartment cover*

WARNING

Do not place anything on top of the cover:
Placing luggage or other cargo on top of the luggage compartment cover is dangerous. During sudden braking or a collision, the cargo could become a projectile that could hit and injure someone. The vehicle has a light weight luggage compartment cover to keep the contents of your luggage area out of sight; it will not retain heavy objects that are not tied down in an accident such as a rollover. Tie down all heavy objects, whether luggage or cargo, using the tie down hooks.

Make sure luggage and cargo are secured before driving:
Not securing cargo while driving is dangerous as it could move or be crushed during sudden braking or a collision and cause injury.

CAUTION

Make sure the luggage compartment cover is firmly secured. If it is not firmly secured, it could unexpectedly disengage resulting in injury.

*Some models.

The luggage compartment can be accessed by opening the liftgate when the straps are attached to the sides of the liftgate.

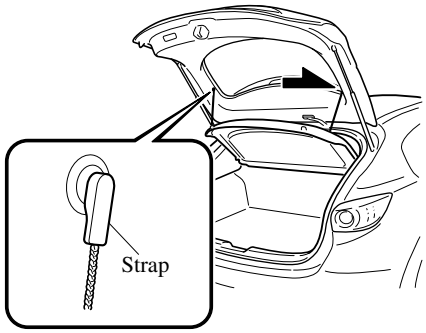

Removing the cover

This cover can be removed for more room.

1. Remove the straps from the hooks.
2. Lift the end of the luggage compartment cover a little, pull it outward, and remove it from the pins.

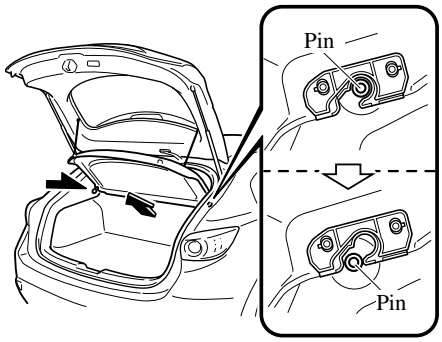

3. Lift the front end of the luggage compartment cover and remove it.

Fuel and Engine Exhaust Precautions

▼ Fuel Requirements

Vehicles with catalytic converters or oxygen sensors must use ONLY UNLEADED FUEL, which will reduce exhaust emissions and keep spark plug fouling to a minimum.

This vehicle will perform best with fuel listed in the table.

Fuel	Octane Rating* (Anti-knock index)
Regular unleaded fuel	87 [(R+M)/2 method] or above (91 RON or above)

∗ U.S. federal law requires that octane ratings be posted on gasoline station pumps.

Fuel with a rating lower than 87 octane (91 RON) will negatively affect the emission control system performance and could also cause engine knocking and serious engine damage.

⚠ CAUTION

- *USE ONLY UNLEADED FUEL.*
  Leaded fuel is harmful to the catalytic converter and oxygen sensors and will lead to deterioration of the emission control system and or failures.
- *This vehicle can only use oxygenated fuels containing no more than 10 % ethanol by volume. Damage to the vehicle may occur when ethanol exceeds this recommendation, or if the gasoline contains any methanol. Stop using gasohol of any kind if your vehicle engine is performing poorly.*
- *Never add fuel system additives, otherwise the emission control system could be damaged. Consult an Authorized Mazda Dealer for details.*

Gasoline blended with oxygenates such as alcohol or ether compounds are generally referred to as oxygenated fuels. The common gasoline blend that can be used with your vehicle is ethanol blended at no more than 10 %. Gasoline containing alcohol, such as ethanol or methanol, may be marketed under the name "Gasohol".

Vehicle damage and drivability problems resulting from the use of the following may not be covered by the warranty.

- Gasohol containing more than 10 % ethanol.
- Gasoline or gasohol containing methanol.
- Leaded fuel or leaded gasohol.

▼ Emission Control System

This vehicle is equipped with an emission control system (the catalytic converter is part of this system) that enables the vehicle to comply with existing exhaust emissions requirements.

⚠ WARNING

Never park over or near anything flammable:
Parking over or near anything flammable, such as dry grass, is dangerous. Even with the engine turned off, the exhaust system remains very hot after normal use and could ignite anything flammable. A resulting fire could cause serious injury or death.

⚠ CAUTION

Ignoring the following precautions could cause lead to accumulate on the catalyst inside the converter or cause the converter to get very hot. Either condition will damage the converter and cause poor performance.

- *USE ONLY UNLEADED FUEL.*
- *Do not drive your Mazda with any sign of engine malfunction.*
- *Do not coast with the ignition switched off.*
- *Do not descend steep grades in gear with the ignition switched off.*
- *Do not operate the engine at high idle for more than 2 minutes.*
- *Do not tamper with the emission control system. All inspections and adjustments must be made by a qualified technician.*
- *Do not push-start or pull-start this vehicle.*

NOTE

- *Under U.S. federal law, any modification to the original-equipment emission control system before the first sale and registration of a vehicle is subject to penalties. In some states, such modification made on a used vehicle is also subject to penalties.*
- *While the engine is off, the sound of a valve opening and closing can be heard at the rear of the vehicle, however this does not indicate an abnormality. The vehicle has a self-checking device and it operates while the engine is off.*

▼ Engine Exhaust (Carbon monoxide)

WARNING

Do not drive your vehicle if you smell exhaust gas inside the vehicle:
Engine exhaust gas is dangerous. This gas contains carbon monoxide (CO), which is colorless, odorless, and poisonous. When inhaled, it can cause loss of consciousness and death. If you smell exhaust gas inside the vehicle, keep all windows fully open and contact an Authorized Mazda Dealer immediately.

Do not run the engine when inside an enclosed area:
Running the engine inside an enclosed area, such as a garage, is dangerous. Exhaust gas, which contains poisonous carbon monoxide, could easily enter the cabin. Loss of consciousness or even death could occur.

Open the windows or adjust the heating or cooling system to draw fresh air when idling the engine:
Exhaust gas is dangerous. When the vehicle is stopped with the windows closed and the engine running for a long time even in an open area, exhaust gas, which contains poisonous carbon monoxide, could enter the cabin. Loss of consciousness or even death could occur.

Clear snow from underneath and around your vehicle, particularly the tail pipe, before starting the engine:
Running the engine when a vehicle is stopped in deep snow is dangerous. The exhaust pipe could be blocked by the snow, allowing exhaust gas to enter the cabin. Because exhaust gas contains poisonous carbon monoxide, it could cause loss of consciousness or even death to occupants in the cabin.

Fuel-Filler Lid and Cap

WARNING

When removing the fuel-filler cap, loosen the cap slightly and wait for any hissing to stop, then remove it:
Fuel spray is dangerous. Fuel can burn skin and eyes and cause illness if ingested. Fuel spray is released when there is pressure in the fuel tank and the fuel-filler cap is removed too quickly.

Before refueling, stop the engine, and always keep sparks and flames away from the filler neck:
Fuel vapor is dangerous. It could be ignited by sparks or flames causing serious burns and injuries.
Additionally, use of the incorrect fuel-filler cap or not using a fuel-filler cap may result in a fuel leak, which could result in serious burns or death in an accident.

Do not continue refueling after the fuel pump nozzle shuts off automatically:
Continuing to add fuel after the fuel pump nozzle has shut off automatically is dangerous because overfilling the fuel tank may cause fuel overflow or leakage. Fuel overflow and leakage could damage the vehicle and if the fuel ignites it could cause a fire and explosion resulting in serious injury or death.

CAUTION

Always use only a genuine Mazda fuel-filler cap or an approved equivalent, available at an Authorized Mazda Dealer. The wrong cap can result in a serious malfunction of the fuel and emission control systems.
(U.S.A. and Canada)
It may also cause the check engine light in the instrument cluster to illuminate.

▼ Refueling

Before refueling, close all the doors, windows, and the liftgate, and switch the ignition OFF.

1. To open the fuel-filler lid, pull the remote fuel-filler lid release.

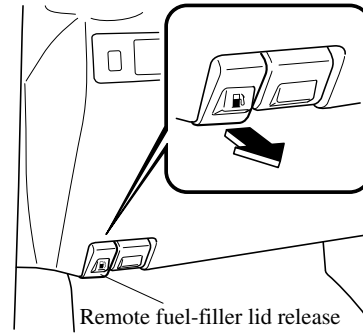

2. To remove the fuel-filler cap, turn it counterclockwise.

3. Attach the removed cap to the inner side of the fuel-filler lid.

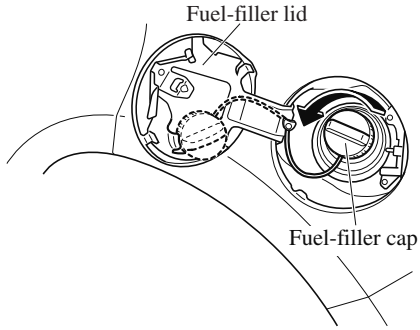

4. Insert the refueling nozzle all the way and begin refueling. Pull out the refueling nozzle after the refueling stops automatically.
5. To close the fuel-filler cap, turn it clockwise until a click is heard.
6. To close, press the fuel-filler lid until it locks securely.

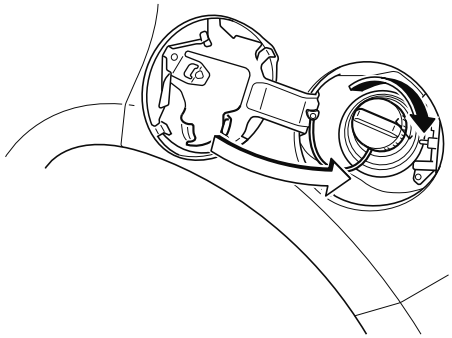

CAUTION

(U.S.A. and Canada)
If the check fuel cap warning light illuminates, the fuel-filler cap may not be properly installed. If the warning light illuminates, park your vehicle safely off the right-of-way, remove the fuel-filler cap and reinstall it correctly. After the cap has been correctly installed, the fuel cap warning light may continue to illuminate until a number of driving cycles have been completed. A drive cycle consists of starting the engine (after four or more hours with the engine off) and driving the vehicle on city and highway roads.
Continuing to drive with the check fuel cap warning light illuminated could cause the check engine light to illuminate as well.

Steering Wheel

WARNING

Never adjust the steering wheel while the vehicle is moving:
Adjusting the steering wheel while the vehicle is moving is dangerous. Moving it can very easily cause the driver to abruptly turn to the left or right. This can lead to loss of control or an accident.

▼ Steering Wheel Adjustment

To change the angle or length of the steering wheel:

1. Stop the vehicle, and then pull down the lock release lever under the steering column.

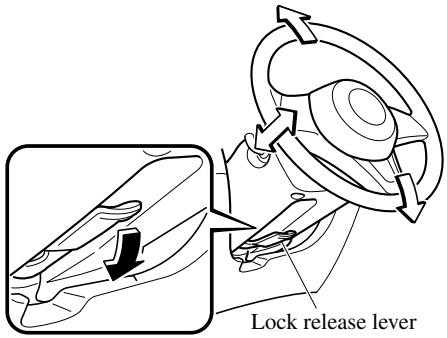

2. Tilt the steering wheel and/or adjust the steering column length to the desired positions, then push the lever up to lock the column.
3. Attempt to push the steering wheel up and down to make sure it's locked before driving.

NOTE
Make sure that the steering wheel is locked firmly in place. If it is difficult to raise the lever, lightly move the steering wheel forward and back to pull up the lever.

▼ Heated Steering Wheel*

The grips on the left and right of the steering wheel can be warmed up.

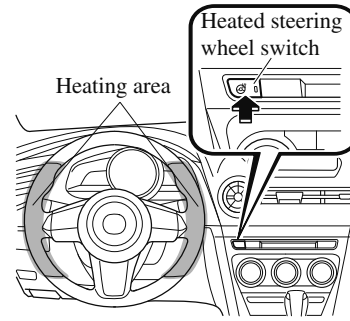

The ignition must be switched ON.

Press the switch to turn on the heated steering wheel. The heated steering wheel operates for about 30 minutes and then turns off automatically.
The indicator light illuminates when the heater is operating.

To turn off the heated steering wheel before the 30 minutes has elapsed, press the switch again.

CAUTION

The following types of persons should be careful not to touch the steering wheel. Otherwise, it could cause a low-temperature burn.

➢ *Infants, small children, elderly people, and physically challenged people*

*Some models.

- *People with delicate skin*
- *People who are excessively fatigued*
- *People who are intoxicated*
- *People who have taken sleep-inducing medicine such as sleeping pills or cold medicine*

Mirrors

Before driving, adjust the inside and outside mirrors.

▼ Outside Mirrors

WARNING

Be sure to look over your shoulder before changing lanes:
Changing lanes without taking into account the actual distance of the vehicle in the convex mirror is dangerous. You could have a serious accident. What you see in the convex mirror is closer than it appears.

Mirror type

Flat type (driver's side)
Flat surface mirror.
Convex type (front passenger side)
The mirror has single curvature on its surface.

Power mirror adjustment

The ignition must be switched to ACC or ON position.

To adjust:
1. Rotate the mirror switch to the left L or right R to choose the left or right side mirror.
2. Press the mirror switch in the appropriate direction.

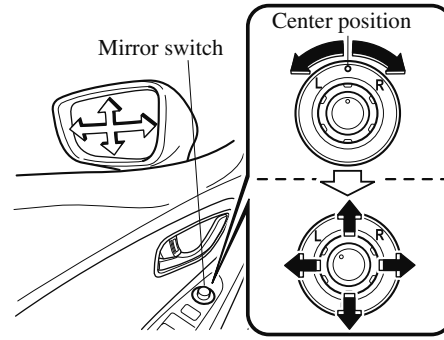

After adjusting the mirror, lock the control by rotating the switch in the center position.

Folding mirror

WARNING

Always return the outside mirrors to the driving position before you start driving:
Driving with the outside mirrors folded in is dangerous. Your rear view will be restricted, and you could have an accident.

Manually fold the outside mirror rearward until it is flush with the vehicle.

▼ Rearview Mirror

WARNING

Do not stack cargo or objects higher than the seatbacks:
Cargo stacked higher than the seatbacks is dangerous. It can block your view in the rearview mirror, which might cause you to hit another car when changing lanes.

Rearview mirror adjustment

Before driving, adjust the rearview mirror to center on the scene through the rear window.

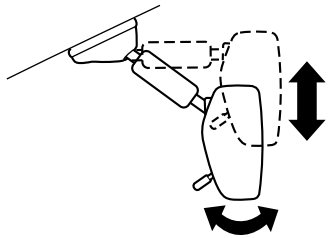

NOTE
For the manual day/night mirror, perform the adjustment with the day/night lever in the day position.

Reducing glare from headlights

Manual day/night mirror

Push the day/night lever forward for day driving. Pull it back to reduce glare of headlights from vehicles at the rear.

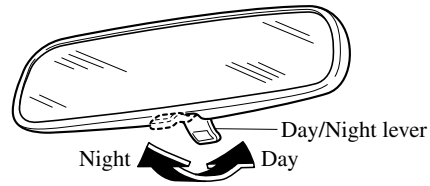

Auto-dimming mirror

The auto-dimming mirror automatically reduces the glare of headlights from vehicles at the rear when the ignition is switched ON.

NOTE

- *Do not use glass cleaner or suspend objects on or around the light sensor. Otherwise, light sensor sensitivity will be affected and may not operate normally.*

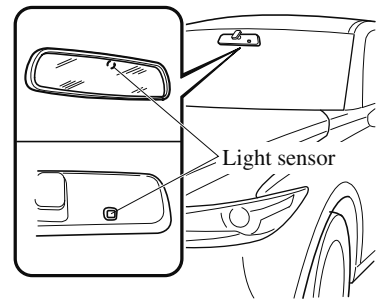

- *The auto-dimming function is canceled when the ignition is switched ON and the selector lever is in reverse (R).*

Power Windows

The windows can be opened/closed by operating the power window switches.

WARNING

Make sure the opening is clear before closing a window:
Closing a power window is dangerous. A person's hands, head, or even neck could be caught by the window and result in serious injury or even death. This warning applies especially to children.

Never allow children to play with power window switches:
Power window switches that are not locked with the power window lock switch would allow children to operate power windows unintentionally, which could result in serious injury if a child's hands, head or neck becomes caught by the window.

Make sure nothing blocks the window just before it reaches the fully closed position or while holding up the power window switch:
Blocking the power window just before it reaches the fully closed position or while holding up the power window switch is dangerous.
In this case, the jam-safe function cannot prevent the window from closing all the way. If fingers are caught, serious injuries could occur.

NOTE
When driving with only 1 of the rear windows open, your ears might experience a resonating sound. However, this does not indicate a problem. The sound can be reduced by slightly opening a front window or by changing the size of the rear window opening.

▼ Opening/Closing Windows

The window opens while the switch is pressed and it closes while the switch is pulled up with the ignition switched ON. Do not open or close three or more windows at the same time.
The front passenger's side and rear windows can be opened/closed when the power window lock switch on the driver's door is in the unlock position. Keep this switch in the locked position while children are in the vehicle.

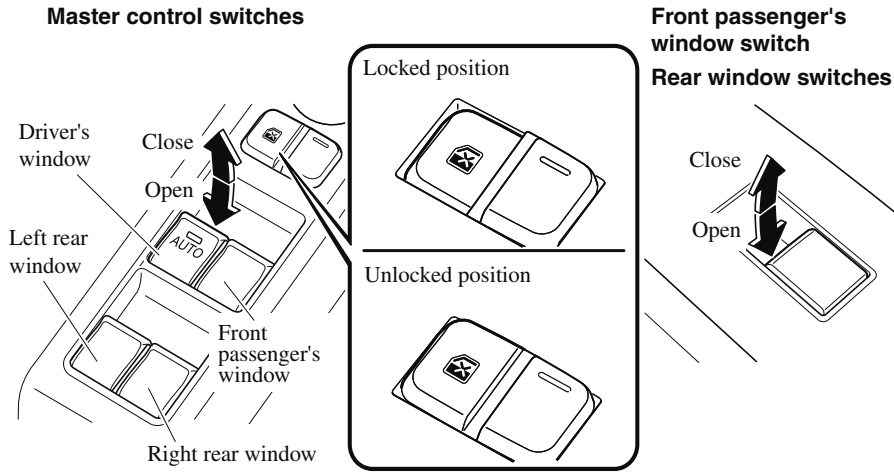

NOTE

- *A power window may no longer open/close if you continue to press the switch after fully opening/closing the power window. If the power window does not open/close, wait a moment and then operate the switch again.*
- *The passenger windows may be opened or closed using the master control switches on the driver's door.*
- *The power window can be operated for about 40 seconds after the ignition is switched from ON to ACC or off with all doors closed. If any door is opened, the power window will stop operating.*
  For engine-off operation of the power window, the switch must be held up firmly throughout window closure because the auto-closing function will be inoperable.

▼ Auto-opening/Closing

To fully open the window automatically, press the switch completely down, then release. The window will fully open automatically.
To fully close the window automatically, pull the switch completely up, then release. The window will fully close automatically.

To stop the window partway, pull or press the switch in the opposite direction and then release it.
This function is only equipped on the driver's side.

NOTE
Power window system initialization procedure
If the battery was disconnected during vehicle maintenance, or for other reasons (such as a switch continues to be operated after the window is fully open/closed), the window will not fully open and close automatically.
The power window auto function will only resume on a power window that has been reset.

1. *Switch the ignition ON.*
2. *Make sure that the power window lock switch located on the driver's door is not depressed.*
3. *Press the switch and fully open the window.*
4. *Pull up the switch to fully close the window and continue holding the switch for about 2 seconds after the window fully closed.*
5. *Make sure that the power windows operate correctly using the door switches.*

▼ Jam-safe Window

If foreign matter is detected between the window and the window frame while the window is closing automatically (refer to Auto-opening/Closing on page 3-35), the window stops closing and automatically opens partway.

NOTE

- *The jam-safe function may operate under the following conditions:*
  - *A strong impact is detected while the window is closing automatically.*
  - *Window is closing automatically in very low temperatures.*
- *In the event the jam-safe function activates and the power window cannot be closed automatically, pull and hold the switch and the window will close.*
- *The jam-safe window function does not operate until the system has been reset.*

Moonroof*

The moonroof can be opened or closed when operating the overhead tilt/slide switch at the front seats.

WARNING

Do not let passengers stand up or extend part of the body through the open moonroof while the vehicle is moving:
Extending the head, arms, or other parts of the body through the moonroof is dangerous. The head or arms could hit something while the vehicle is moving. This could cause serious injury or death.

Never allow children to play with the tilt/slide switch:
The tilt/slide switch would allow children to operate the moonroof unintentionally, which could result in serious injury if a child's hands, head or neck becomes caught by the moonroof.

Make sure the opening is clear before closing the moonroof:
A closing moonroof is dangerous. The hands, head, or even neck of a person, especially a child, could be caught in it as it closes, causing serious injury or even death.

CAUTION

- *Do not sit on or put heavy items on the area where the moonroof opens and closes. Otherwise, the moonroof could be damaged.*
- *Do not open or close the moonroof forcefully during freezing temperatures or snowfall. Otherwise, the moonroof could be damaged.*
- *The sunshade does not tilt. To avoid damaging the sunshade, do not push it up.*
- *Do not close the sunshade while the moonroof is opening. Trying to force the sunshade closed could damage it.*

▼ Tilt/Slide Operation

The moonroof can be opened or closed electrically only when the ignition is switched ON.

- Before leaving the vehicle or washing your Mazda, make sure the moonroof is completely closed so that water does not get inside the cabin area.
- After washing your Mazda or after it rains, wipe the water off the moonroof before operating it to avoid water penetration which could cause rust and water damage to your headliner.

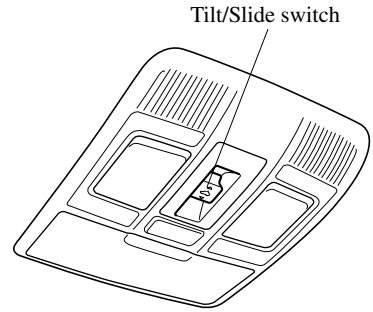

*Some models.

Tilt Operation

The rear of the moonroof can be tilted open to provide more ventilation.

To fully tilt automatically, momentarily press the tilt/slide switch.
To stop tilting partway, press the tilt/slide switch.
To close to the desired position, press the tilt/slide switch in the forward direction.
When the moonroof is already slid open and you want to tilt it open, first close the moonroof and then do a tilt operation.

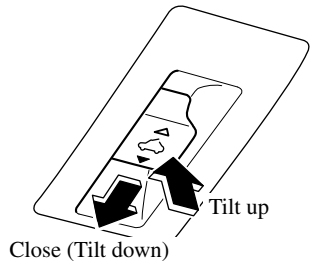

Slide Operation

To fully open automatically, momentarily press the tilt/slide switch in the backward direction.
To stop sliding partway, press the tilt/slide switch.
To close to the desired position, press the tilt/slide switch in the forward direction.
When the moonroof is already tilted open and you want to slide it open, first close the moonroof and then do a slide operation.

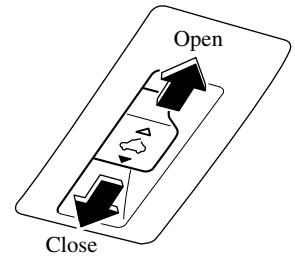

NOTE
If the moonroof does not operate normally, do the following procedure:
1. *Switch the ignition ON.*
2. *Press the tilt switch, to partially tilt open the rear of the moonroof.*
3. *Repeat Step 2. The rear of the moonroof tilts open to the fully open position, then closes a little.*

If the reset procedure is performed while the moonroof is in the slide position (partially open) it will close before the rear tilt opens.

▼ Sunshade

The sunshade can be opened and closed by hand.

The sunshade opens at the same time as the moonroof slides open, but it must be closed by hand.

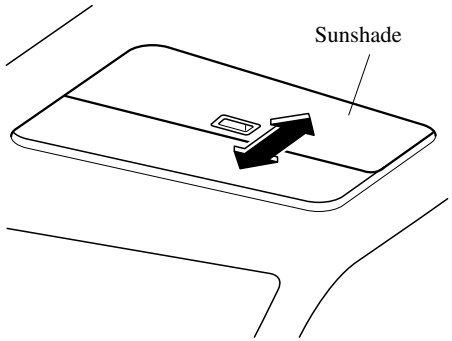

Modification and Add-On Equipment

Mazda cannot guarantee the immobilizer and the theft-deterrent systems' operation if the system has been modified or if any add-on equipment has been installed.

CAUTION

To avoid damage to the vehicle, do not modify the system or install any add-on equipment to the immobilizer and the theft-deterrent systems or the vehicle.

Immobilizer System

The immobilizer system allows the engine to start only with a key the system recognizes.

If someone attempts to start the engine with an unrecognized key, the engine will not start, thereby helping to prevent vehicle theft.
If you have a problem with the immobilizer system or the key, consult an Authorized Mazda Dealer.

CAUTION

- *Radio equipment like this is governed by laws in the United States.*
  Changes or modifications not expressly approved by the party responsible for compliance could void the user's authority to operate the equipment.
- *To avoid damage to the key, do not:*
  - *Drop the key.*
  - *Get the key wet.*
  - *Expose the key to any kind of magnetic field.*
  - *Expose the key to high temperatures on places such as the dashboard or hood, under direct sunlight.*
- *If the engine does not start with the correct key, and the security indicator light keeps illuminating or flashing, the system may have a malfunction. Consult an Authorized Mazda Dealer.*

NOTE

- *The keys carry a unique electronic code. For this reason, and to assure your safety, obtaining a replacement key requires some waiting time. They are only available through an Authorized Mazda Dealer.*
- *Always keep a spare key in case one is lost. If a key is lost, consult an Authorized Mazda Dealer as soon as possible.*
- *If you lose a key, an Authorized Mazda Dealer will reset the electronic codes of your remaining keys and immobilizer system. Bring all the remaining keys to an Authorized Mazda Dealer to reset. Starting the vehicle with a key that has not been reset is not possible.*

▼ Operation

NOTE

- *The engine may not start and security indicator light may illuminate or flash if the key is placed in an area where it is difficult for the system to detect the signal, such as on the dashboard or in the glove compartment. Move the key to a location within the signal range, switch the ignition off, and then restart the engine.*
- *Signals from a TV or radio station, or from a transceiver or mobile telephone could interfere with your immobilizer system. If you are using the proper key and the engine fails to start, check the security indicator light.*

Arming

The system is armed when the ignition is switched from ON to off.
The security indicator light in the instrument cluster flashes every 2 seconds until the system is disarmed.

Disarming

The system is disarmed when the ignition is switched ON with the correct programmed key. The security indicator light illuminates for about 3 seconds and then turns off. If the engine does not start with the correct key, and the security indicator light remains illuminated or flashing, try the following:
Make sure the key is within the operational range for signal transmission.
Switch the ignition off, and then restart the engine. If the engine does not start after 3 or more tries, contact an Authorized Mazda Dealer.

NOTE

- *If the security indicator light flashes continuously while you are driving, do not shut off the engine. Go to an Authorized Mazda Dealer and have it checked. If the engine is shut off while the indicator light is flashing, you will not be able to restart it.*
- *Because the electronic codes are reset when the immobilizer system is repaired, the keys are needed. Make sure to bring all the keys to an Authorized Mazda Dealer so that they can be programmed.*

Theft-Deterrent System*

If the theft-deterrent system detects an inappropriate entry into the vehicle, which could result in the vehicle or its contents being stolen, the alarm alerts the surrounding area of an abnormality by sounding the horn and flashing the hazard warning lights.

The system will not function unless it's properly armed. So when you leave the vehicle, follow the arming procedure correctly.

▼ Operation

System triggering conditions

The horn sounds intermittently and the hazard warning lights flash for about 30 seconds when the system is triggered by any one of the following:

- Unlocking a door with the auxiliary key, door lock switch, or an inside door-lock knob.
- Forcing open a door, the hood or the liftgate.
- Opening the hood by operating the hood release handle.
- Switching the ignition ON without using the push button start.

If the system is triggered again, the lights and horn will activate until the driver's door or the liftgate is unlocked with the transmitter.
(With the advanced keyless function)
The lights and horn can also be deactivated by pressing the request switch on a door.

NOTE

- *The liftgate does not open while the theft-deterrent system is operating.*
- *If the battery goes dead while the theft-deterrent system is armed, the horn will activate and the hazard warning lights will flash when the battery is charged or replaced.*

▼ How to Arm the System

1. Close the windows and the moonroof* securely.
2. Switch the ignition OFF.
3. Make sure the hood, the doors, and the liftgate are closed.
4. Press the lock button on the transmitter or lock the driver's door from the outside with the auxiliary key.
   The hazard warning lights will flash once.
   The following method will also arm the theft-deterrent system:
   Press the door-lock switch "🔒" while any door is open and then close all of the doors.
   (With the advanced keyless function)
   Press a request switch.

   The security indicator light in the instrument cluster flashes twice per second for 20 seconds.

5. After 20 seconds, the system is fully armed.

*Some models.

NOTE

- *The theft-deterrent system can also be armed by activating the auto relock function with all the doors, the liftgate and the hood closed.*
  Refer to Transmitter on page 3-4.
- *The system will disarm if one of the following operations takes place within 20 seconds after pressing the lock button:*
  - *Unlocking any door.*
  - *Opening any door.*
  - *Opening the hood.*
  - *Switching the ignition ON.*
  - ***(With the advanced keyless function)*** *Pressing the electric liftgate opener while the key is being carried.*

  To rearm the system, do the arming procedure again.
- *When the doors are locked by pressing the lock button on the transmitter or using the auxiliary key while the theft-deterrent system is armed, the hazard warning lights will flash once to indicate that the system is armed.*

▼ To Turn Off an Armed System

An armed system can be turned off using any one of the following methods:

- Pressing the unlock button on the transmitter.
- Starting the engine with the push button start.
- **(With the advanced keyless function)**
  - Pressing a request switch on the doors.

The hazard warning lights will flash twice.

NOTE

When the doors are unlocked by pressing the unlock button on the transmitter while the theft-deterrent system is turned off, the hazard warning lights will flash twice to indicate that the system is turned off.

▼ To Stop the Alarm

A triggered alarm can be turned off using any one of the following methods:

- Pressing the unlock button on the transmitter.
- Starting the engine with the push button start.
- **(With the advanced keyless function)**
  - Pressing a request switch on the doors.
  - Pressing the electric liftgate opener while the key is being carried.

The hazard warning lights will flash twice.

Break-In Period

No special break-in is necessary, but a few precautions in the first 1,000 km (600 miles) may add to the performance, economy, and life of the vehicle.

- Do not race the engine.
- Do not maintain one constant speed, either slow or fast, for a long period of time.
- Do not drive constantly at full-throttle or high engine rpm for extended periods of time.
- Avoid unnecessary hard stops.
- Avoid full-throttle starts.

Saving Fuel and Protection of the Environment

How you operate your Mazda determines how far it will travel on a tank of fuel. Use these suggestions to help save fuel and reduce CO_2.

- Avoid long warm-ups. Once the engine runs smoothly, begin driving.
- Avoid fast starts.
- Drive at lower speeds.
- Anticipate when to apply the brakes (avoid sudden braking).
- Follow the maintenance schedule (page 6-4) and have an Authorized Mazda Dealer perform inspections and servicing.
- Use the air conditioner only when necessary.
- Slow down on rough roads.
- Keep the tires properly inflated.
- Do not carry unnecessary weight.
- Do not rest your foot on the brake pedal while driving.
- Keep the wheels in correct alignment.
- Keep windows closed at high speeds.
- Slow down when driving in crosswinds and headwinds.

WARNING

Never stop the engine when going down a hill:
Stopping the engine when going down a hill is dangerous. This causes the loss of power steering and power brake control, and may cause damage to the drivetrain. Any loss of steering or braking control could cause an accident.

Hazardous Driving

WARNING

Be extremely careful if it is necessary to downshift on slippery surfaces:
Downshifting into lower gear while driving on slippery surfaces is dangerous. The sudden change in tire speed could cause the tires to skid. This could lead to loss of vehicle control and an accident.

When driving on ice or in water, snow, mud, sand, or similar hazards:

- Be cautious and allow extra distance for braking.
- Avoid sudden braking and sudden maneuvering.
- Do not pump the brakes. Continue to press down on the brake pedal.
  Refer to Antilock Brake System (ABS) on page 4-67.
- If you get stuck, select a lower gear and accelerate slowly. Do not spin the front wheels.
- For more traction in starting on slippery surfaces such as ice or packed snow, use sand, rock salt, chains, carpeting, or other nonslip material under the front wheels.

NOTE
Use snow chains only on the front wheels.

Floor Mat

We recommend the use of Genuine Mazda floor mats.

WARNING

Make sure the floor mats are hooked on the retention pins to prevent them from bunching up under the foot pedals:
Using a floor mat that is not secured is dangerous as it will interfere with the accelerator and brake pedal operation, which could result in an accident.

Do not install two floor mats, one on top of the other, on the driver's side:
Installing two floor mats, one on top of the other, on the driver's side is dangerous as the retention pins can only keep one floor mat from sliding forward.
Loose floor mat(s) will interfere with the foot pedals and could result in an accident.
If using an all-weather mat for winter use always remove the original floor mat.

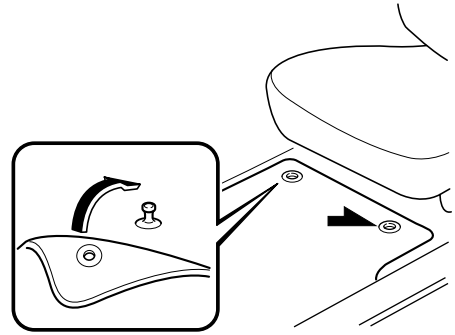

When setting a floor mat, position the floor mat so that its grommets are inserted over the pointed end of the retention posts.

Rocking the Vehicle

WARNING

Do not spin the wheels at more than 56 km/h (35 mph), and do not allow anyone to stand behind a wheel when pushing the vehicle:
When the vehicle is stuck, spinning the wheels at high speed is dangerous. The spinning tire could overheat and explode. This could cause serious injuries.

CAUTION

Too much rocking may cause engine overheating, transaxle failure, and tire damage.

If you must rock the vehicle to free it from snow, sand or mud, depress the accelerator slightly and slowly move the shift lever/ selector lever from 1 (D) to R position.

Winter Driving

Carry emergency gear, including tire chains, window scraper, flares, a small shovel, jumper cables, and a small bag of sand or salt.
Ask an Authorized Mazda Dealer to check the following:

- Have the proper ratio of antifreeze in the radiator.
  Refer to Engine Coolant on page 6-25.
- Inspect the battery and its cables. Cold reduces battery capacity.
- Use an engine oil appropriate for the lowest ambient temperatures that the vehicle will be driven in (page 6-22).
- Inspect the ignition system for damage and loose connections.
- Use washer fluid made with antifreeze—but do not use engine coolant antifreeze for washer fluid (page 6-27).

NOTE

- *Remove snow before driving. Snow left on the windshield is dangerous as it could obstruct vision.*
- *Do not apply excessive force to a window scraper when removing ice or frozen snow on the mirror glass and windshield.*
- *Never use warm or hot water for removing snow or ice from windows and mirrors as it could result in the glass cracking.*

- *Drive slowly. Braking performance can be adversely affected if snow or ice adheres to the brake components. If this situation occurs, drive the vehicle slowly, releasing the accelerator pedal and lightly applying the brakes several times until the brake performance returns to normal.*

▼ Snow Tires

Use snow tires on all four wheels

Do not go faster than 120 km/h (75 mph) while driving with snow tires. Inflate snow tires 30 kPa (0.3 kgf/cm^2, 4.3 psi) more than recommended on the tire pressure label (driver's door frame), but never more than the maximum cold-tire pressure shown on the tires.

Except Mexico

The vehicle is originally equipped with all season radials designed to be used all year around. In some extreme climates you may find it necessary to replace them with snow tires during the winter months to further improve traction on snow and ice covered roads.

Mexico

The vehicle is originally equipped with summer tires designed for optimum traction on wet and dry roads. If your vehicle is to be used on snow and ice covered roads, Mazda recommends that you replace the tires originally equipped on your vehicle with snow tires during the winter months.

⚠ WARNING

Use only the same size and type tires (snow, radial, or non-radial) on all four wheels:
Using tires different in size or type is dangerous. Your vehicle's handling could be greatly affected and result in an accident.

⚠ CAUTION

Check local regulations before using studded tires.

NOTE
If your vehicle is equipped with the tire pressure monitoring system, the system may not function correctly when using tires with steel wire reinforcement in the sidewalls (page 4-145).

▼ Tire Chains

Check local regulations before using tire chains.

⚠ CAUTION

- *Chains may affect handling.*
- *Do not go faster than 50 km/h (30 mph) or the chain manufacturer's recommended limit, whichever is lower.*
- *Drive carefully and avoid bumps, holes, and sharp turns.*
- *Avoid locked-wheel braking.*
- *Do not use chains on a temporary spare tire; it may result in damage to the vehicle and to the tire.*
- *Do not use chains on roads that are free of snow or ice. The tires and chains could be damaged.*

➢ *Chains may scratch or chip aluminum wheels.*

NOTE

- *If your vehicle is equipped with the tire pressure monitoring system, the system may not function correctly when using tire chains.*

Install the chains on the front tires only. Do not use chains on the rear tires. Please consult an Authorized Mazda Dealer.

Installing the chains

1. If your vehicle is equipped with wheel covers remove them, otherwise the chain bands will scratch them.
2. Secure the chains on the front tires as tightly as possible.
   Always follow the chain manufacturer's instructions.
3. Retighten the chains after driving 1/2—1 km (1/4—1/2 mile).

Driving In Flooded Area

WARNING

Dry off brakes that have become wet by driving slowly, releasing the accelerator pedal and lightly applying the brakes several times until the brake performance returns to normal:
Driving with wet brakes is dangerous. Increased stopping distance or the vehicle pulling to one side when braking could result in a serious accident. Light braking will indicate whether the brakes have been affected.

CAUTION

Do not drive the vehicle on flooded roads as it could cause short circuiting of electrical/electronic parts, or engine damage or stalling from water absorption. If the vehicle has been immersed in water, consult an Authorized Mazda Dealer.

Overloading

WARNING

Be careful not to overload your vehicle:
The gross axle weight rating (GAWR) and the gross vehicle weight rating (GVWR) of the vehicle are on the Motor Vehicle Safety Standard Label on the driver's door frame. Exceeding these ratings can cause an accident or vehicle damage. You can estimate the weight of the load by weighing the items (or people) before putting them in the vehicle.

Driving on Uneven Road

Your vehicle's suspension and underbody can be damaged if driven on rough/uneven roads or over speed bumps at excessive speeds. Use care and reduce speed when traveling on rough/uneven roads or over speed bumps.

Use care not to damage the vehicle's underbody, bumpers or muffler(s) when driving under the following conditions:

- Ascending or descending a slope with a sharp transition angle
- Ascending or descending a driveway or trailer ramp with a sharp transition angle

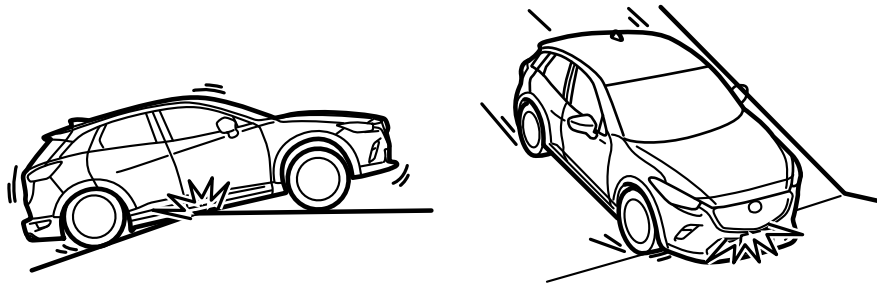

This vehicle is equipped with low profile tires allowing class-leading performance and handling. As a result, the sidewall of the tires are very thin and the tires and wheels can be damaged if driven through potholes or on rough/uneven roads at excessive speeds. Use care and reduce speed when traveling on rough/uneven roads or through potholes.

Trailer Towing

Your Mazda is not designed for towing. Never tow a trailer with your Mazda.

Recreational Towing

An example of "recreational towing" is towing your vehicle behind a motorhome. The transaxle is not designed for towing this vehicle on all 4 wheels.
When doing recreational towing refer to "Towing Description" (page 7-24) and "Tiedown Hooks" (page 7-25) and carefully follow the instructions.

4 When Driving

Information concerning safe driving and stopping.

Start/Stop Engine..... 4-4
Ignition Switch..... 4-4
Starting the Engine..... 4-5
Turning the Engine Off.....4-10

Instrument Cluster and Display..... 4-11
Meters and Gauges..... 4-11
Active Driving Display*.....4-21
Warning/Indicator Lights.....4-24

Manual Transaxle Operation..... 4-30
Manual Transaxle Shift Pattern.....4-30

Automatic Transaxle..... 4-32
Automatic Transaxle Controls..... 4-32
Shift-Lock System.....4-33
Transaxle Ranges.....4-33
Manual Shift Mode.....4-35
Direct Mode*..... 4-41
Driving Tips.....4-42

Switches and Controls.....4-43
Lighting Control..... 4-43
Fog Lights*..... 4-48
Turn and Lane-Change Signals..... 4-48
Windshield Wipers and Washer..... 4-49
Rear Window Wiper and Washer..... 4-53
Rear Window Defogger.....4-53
Horn.....4-55
Hazard Warning Flasher..... 4-55

Brake..... 4-56
Brake System.....4-56
AUTOHOLD.....4-61
Hill Launch Assist (HLA)..... 4-65

ABS/TCS/DSC..... 4-67
Antilock Brake System (ABS).....4-67
Traction Control System (TCS)..... 4-68
Dynamic Stability Control (DSC).....4-70

Fuel Economy Monitor..... 4-71
Fuel Economy Monitor*.....4-71

Drive Selection.....4-73
Drive Selection*.....4-73

*Some models.

i-ACTIV AWD..... 4-75
i-ACTIV AWD Operation*.....4-75

Power Steering.....4-76
Power Steering.....4-76

i-ACTIVSENSE.....4-77
i-ACTIVSENSE*.....4-77
Adaptive Front Lighting System (AFS)*..... 4-80
High Beam Control System (HBC)*.....4-81
Lane Departure Warning System (LDWS)*..... 4-84
Blind Spot Monitoring (BSM)*..... 4-90
Traffic Sign Recognition System (TSR)*..... 4-96
Distance Recognition Support System (DRSS)*.....4-102
Rear Cross Traffic Alert (RCTA)*..... 4-104
Mazda Radar Cruise Control with Stop & Go function (MRCC with Stop & Go function)*.....4-107
Advanced Smart City Brake Support (Advanced SCBS)*.....4-119
Smart City Brake Support (SCBS)*.....4-123
Smart Brake Support (SBS)*....4-127
Forward Sensing Camera (FSC)*..... 4-130
Radar Sensor (Front)*..... 4-135
Radar Sensors (Rear)*.....4-138

Cruise Control.....4-140
Cruise Control*.....4-140

Tire Pressure Monitoring System.....4-144
Tire Pressure Monitoring System*..... 4-144

Rear View Monitor..... 4-148
Rear View Monitor*.....4-148

 *Some models.

MEMO

Ignition Switch

▼ Push Button Start Positions

The system operates only when the driver is in the vehicle or within operational range while the key is being carried.
Each time the push button start is pressed, the ignition switches in the order of off, ACC, and ON. Pressing the push button start again from ON switches the ignition off.

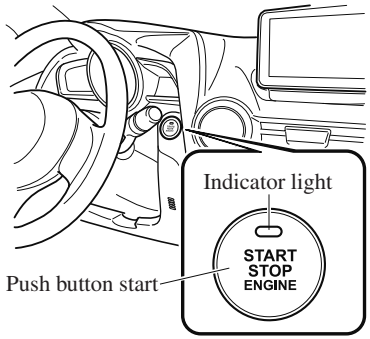

NOTE

- *The engine starts by pressing the push button start while depressing the clutch pedal (manual transaxle) or the brake pedal (automatic transaxle). To switch the ignition position, press the push button start without depressing the pedal.*
- *Do not leave the ignition switched ON while the engine is not running. Doing so could result in the battery going dead. If the ignition is left in ACC (For automatic transaxle, the selector lever is in the P position, and the ignition is in ACC), the ignition switches off automatically after about 25 minutes.*

Off

The power supply to electrical devices turns off and the push button start indicator light (amber) also turns off.

WARNING

Before leaving the driver's seat, always switch the ignition off, set the parking brake, and make sure the selector lever is in P (automatic transaxle) or in 1st gear or R (manual transaxle):
Leaving the driver's seat without switching the ignition off, setting the parking brake, and shifting the selector lever to P (automatic transaxle) or to 1st gear or R (manual transaxle) is dangerous.
Unexpected vehicle movement could occur which could result in an accident.
In addition, if your intention is to leave the vehicle for even a short period, it is important to switch the ignition off, as leaving it in another position will disable some of the vehicle's security systems and run the battery down.

ACC (Accessory)

Some electrical accessories will operate and the indicator light (amber) illuminates.

NOTE
The keyless entry system does not function while the push button start has been pressed to ACC, and the doors will not lock/unlock even if they have been locked manually.

ON

This is the normal running position after the engine is started. The indicator light (amber) turns off. (The indicator light (amber) illuminates when the ignition is switched ON and the engine is not running.)
Some indicator lights/warning lights should be inspected before the engine is started (page 4-24).

NOTE
When the push button start is pressed to ON, the sound of the fuel pump motor operating near the fuel tank can be heard. This does not indicate an abnormality.

Starting the Engine

WARNING

Radio waves from the key may affect medical devices such as pacemakers:
Before using the key near people who use medical devices, ask the medical device manufacturer or your physician if radio waves from the key will affect the device.

NOTE

- *The key must be carried because the key carries an immobilizer chip that must communicate with the engine controls at short range.*
- *The engine can be started when the push button start is pressed from off, ACC, or ON.*
- *The push button start system functions (function which can start the engine by only carrying the key) can be deactivated to prevent any possible adverse effect on a user wearing a pacemaker or other medical device. If the system is deactivated, you will be unable to start the engine by carrying the key. Consult an Authorized Mazda Dealer for details. If the push button start system functions have been deactivated, you can start the engine by following the procedure indicated when the key battery goes dead.*
  Refer to Engine Start Function When Key Battery is Dead on page 4-8.
- *After starting a cold engine, the engine speed increases and a whining sound from the engine compartment can be heard.*

This is for improved exhaust gas purification and does not indicate any parts defect.

- *Engine-starting is controlled by the spark ignition system.*
  This system meets all Canadian Interference-Causing Equipment Standard requirements regulating the impulse electrical field strength of radio noise.

1. Make sure you are carrying the key.
2. Occupants should fasten their seat belts.
3. Make sure the parking brake is on.
4. Continue to press the brake pedal firmly until the engine has completely started.
5. **(Manual transaxle)**
   Continue to press the clutch pedal firmly until the engine has completely started.
   (Automatic transaxle)
   Put the vehicle in park (P). If you must restart the engine while the vehicle is moving, shift into neutral (N).

   NOTE
   (Manual transaxle)
   The starter will not operate if the clutch pedal is not depressed sufficiently.
   (Automatic transaxle)
   The starter will not operate if the selector lever is not in P or N and the brake pedal is not depressed sufficiently.

6. Verify that the KEY indicator light (green) in the instrument cluster and the push button start indicator light (green) illuminate.

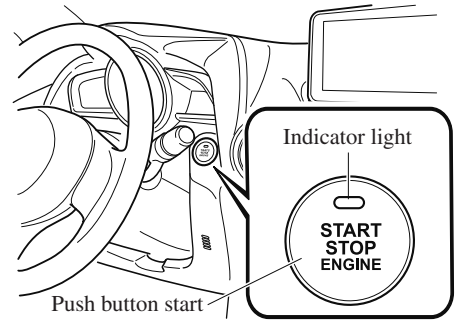

NOTE

- *If the push button start indicator light (green) flashes, make source that the key is being carried.*
- *If the push button start indicator light (green) flashes with the key being carried, touch the key to the push button start and start the engine. Refer to Engine Start Function When Key Battery is Dead on page 4-8.*

CAUTION

If the KEY warning light (red) illuminates, or the push button start indicator light (amber) flashes, this could indicate a problem with the engine starting system. This may prevent the engine from starting or from switching the ignition to ACC or ON. Have your vehicle inspected at an Authorized Mazda Dealer as soon as possible.

NOTE

- *Under the following conditions, the KEY warning light (red) flashes after the push button start is pressed. This informs the driver that the push button start will not switch to ACC even if it is pressed from off.*
  - *The key battery is dead.*
  - *The key is out of operational range.*
  - *The key is placed in areas where it is difficult for the system to detect the signal (page 3-7).*
  - *A key from another manufacturer similar to the key is in the operational range.*
- ***(Forced engine starting method)***
  If the KEY warning light (red) illuminates, or the push button start indicator light (amber) flashes, this could indicate that the engine may not start using the usual starting method. Have your vehicle inspected at an Authorized Mazda Dealer as soon as possible. If this occurs, the engine can be force-started. Press and hold the push button start until the engine starts. Other procedures necessary for starting the engine, such as having the key in the cabin, and depressing the clutch pedal (manual transaxle) or the brake pedal (automatic transaxle) are required.
- *When the engine is force-started, the KEY warning light (red) remains illuminated and the push button start indicator light (amber) remains flashing.*
- ***(Automatic transaxle)***
  When the selector lever is in the neutral (N) position, the KEY indicator light (green) and the push button start indicator light (green) do not illuminate.

7. Press the push button start after both the KEY indicator light (green) in the instrument cluster and the push button start indicator light (green) illuminate.

   NOTE

   - *After starting the engine, the push button start indicator light (amber) turns off and the ignition switches to the ON position.*

- *After pressing the push button start and before the engine starts, the operation sound of the fuel pump motor from near the fuel tank can be heard, however, this does not indicate a malfunction.*

8. After starting the engine, let it idle for about ten seconds.

NOTE

- *Whether the engine is cold or warm, it should be started without the use of the accelerator.*
- *If the engine does not start the first time, refer to Starting a Flooded Engine under Emergency Starting. If the engine still does not start, have your vehicle inspected by an Authorized Mazda Dealer (page 7-21).*

▼ Engine Start Function When Key Battery is Dead

⚠ CAUTION

When starting the engine by holding the transmitter over the push button start due to a dead key battery or a malfunctioning key, be careful not to allow the following, otherwise the signal from the key will not be received correctly and the engine may not start.

➢ *Metal parts of other keys or metal objects touch the key.*

➢ *Spare keys or keys for other vehicles equipped with an immobilizer system touch or come near the key.*

➢ *Devices for electronic purchases, or security passage touch or come near the key.*

If the engine cannot be started due to a dead key battery, the engine can be started using the following procedure:

1. Continue to depress the brake pedal firmly until the engine has completely started.
2. **(Manual transaxle)**
   Continue to depress the clutch pedal firmly until the engine has completely started.
3. Make sure that the push button start indication light (green) flashes.
4. Touch the push button start using the backside of the key (as shown) while the push button start indicator light (green) flashes.

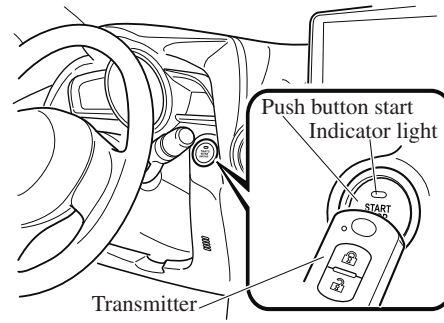

NOTE
When touching the push button start using the backside of the key as shown in the illustration, touch the push button start with the lock switch side of the key facing up.

5. Make sure that the push button start indicator light (green) turns on.
6. Press the push button start to start the engine.

NOTE

- *The engine cannot be started unless the clutch pedal is fully depressed (manual transaxle) or the brake pedal is fully depressed (automatic transaxle).*
- *If there is a malfunction with the push button start function, the push button start indicator light (amber) flashes. In this case, the engine may start, however, have the vehicle checked at an Authorized Mazda Dealer as soon as possible.*
- *If the push button start indicator light (green) does not illuminate, perform the operation from the beginning again. If it does not illuminate, have the vehicle checked at an Authorized Mazda Dealer.*
- *To switch the ignition position without starting the engine, perform the following operations after the push button start indicator light (green) turns on.*
  1. *Release the clutch pedal (manual transaxle) or brake pedal (automatic transaxle).*
  2. *Press the push button start to switch the ignition position. The ignition switches in the order of ACC, ON, and off each time the push button start is pressed. To switch the ignition position again, perform the operation from the beginning.*

▼ Emergency Operation for Starting the Engine

If the KEY warning light (red) illuminates, or the push button start indicator light (amber) flashes, this could indicate that the engine may not start using the usual starting method. Have your vehicle inspected at an Authorized Mazda Dealer as soon as possible. If this occurs, the engine can be force-started. Press and hold the push button start until the engine starts. Other procedures necessary for starting the engine such as having the key in the cabin, and depressing the clutch pedal (manual transaxle) or the brake pedal (automatic transaxle) are required.

Turning the Engine Off

WARNING

Do not stop the engine while the vehicle is moving:
Stopping the engine while the vehicle is moving for any reason other than in an emergency is dangerous. Stopping the engine while the vehicle is moving will result in reduced braking ability due to the loss of power braking, which could cause an accident and serious injury.

1. Stop the vehicle completely.
2. **(Manual transaxle)**
   Shift into neutral and set the parking brake.
   (Automatic transaxle)
   Shift the selector lever to the P position and set the parking brake.
3. Press the push button start to turn off the engine. The ignition position is off.

CAUTION

When leaving the vehicle, make sure the push button start is off.

NOTE

- *The cooling fan in the engine compartment could turn on for a few minutes after the ignition is switched from ON to OFF, whether or not the A/C is on or off, to cool the engine compartment quickly.*
- *When the push button start is pressed from ON to ACC or OFF, the KEY indicator light (green) may flash for approximately 30 seconds indicating that the remaining battery power of the key is low.*
  Replace with a new battery before the key becomes unusable.
  Refer to Key Battery Replacement on page 6-34.
- ***(Automatic transaxle)***
  If the engine is turned off while the selector lever is in a position other than P, the ignition switches to ACC.

▼ Emergency Engine Stop

Continuously pressing the push button start or quickly pressing it any number of times while the engine is running or the vehicle is being driven will turn the engine off immediately. The ignition switches to ACC.

Meters and Gauges

Instrument Cluster

Type A
(Digital Speed Meter Type)

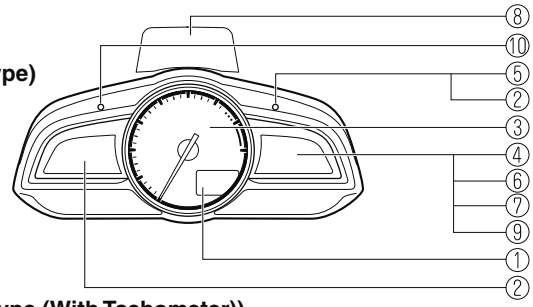

Type B
(Analog Speed Meter Type (With Tachometer))

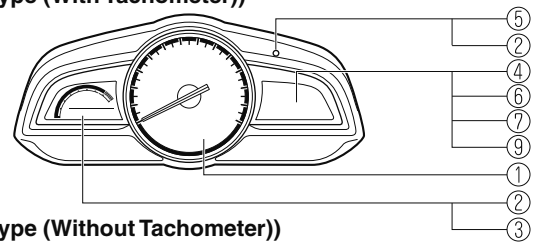

Type C
(Analog Speed Meter Type (Without Tachometer))

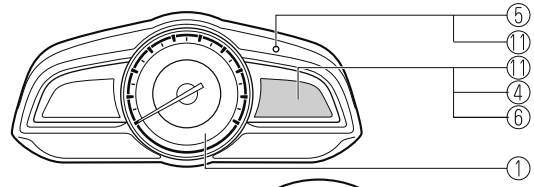

Steering Switch *

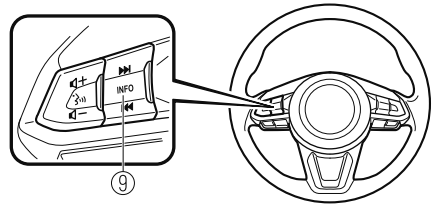

*Some models.

① Speedometer.....page 4-12
② Odometer, Trip Meter and Trip Meter Selector.....page 4-12
③ Tachometer.....page 4-16
④ Fuel Gauge.....page 4-16
⑤ Dashboard Illumination.....page 4-17
⑥ Outside Temperature Display.....page 4-18
⑦ Cruise Control Set Vehicle Speed Display.....page 4-18

Instrument Cluster and Display

⑧ Active Driving Display..... page 4-21
⑨ Trip Computer and INFO Switch.....page 4-18
⑩ Speed Unit Selector.....page 4-12
⑪ Odometer, Trip Meter, Trip Computer and Trip Meter Selector.....page 4-14

▼ Speedometer

The speedometer indicates the speed of the vehicle.

NOTE
(Analog speedometer type)
If a few seconds have elapsed after switching the ignition off, the needle may deviate. However, this does not indicate a problem.

▼ Speed Unit Selector (Digital Speedometer)*

In some countries, you may have to change the speed units between km/h and mph.
Press the speed unit selector for 1.5 seconds or more.
The speed units for the speedometer will change between km/h and mph.

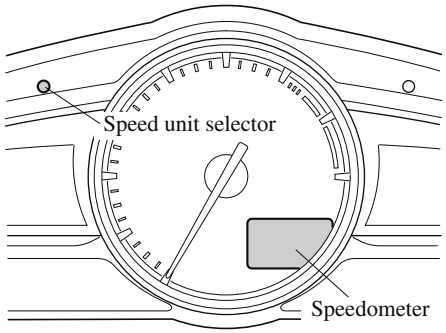

▼ Odometer, Trip Meter and Trip Meter Selector*

The display mode can be changed from odometer to trip meter A to trip meter B and then back to odometer by pressing the selector while one of them is displayed.
The selected mode will be displayed.

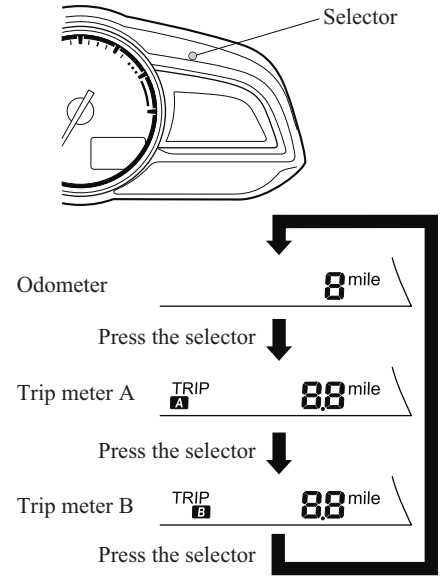

Odometer

The odometer records the total distance the vehicle has been driven.

 *Some models.

Trip meter

The trip meter can record the total distance of two trips. One is recorded in trip meter A, and the other is recorded in trip meter B.

For instance, trip meter A can record the distance from the point of origin, and trip meter B can record the distance from where the fuel tank is filled.

When trip meter A is selected, pressing the selector again within one second will change to trip meter B mode.

When trip meter A is selected, TRIP A will be displayed. When trip meter B is selected, TRIP B will be displayed.

The trip meter records the total distance the vehicle is driven until the meter is again reset. Return it to “0.0” by depressing and holding the selector for one second or more. Use this meter to measure trip distances and to compute fuel consumption.

NOTE

- ***(Vehicles with type B audio)***
  If the fuel economy data is reset using the fuel economy monitor, or trip A is reset using the trip meter when the function which synchronizes the fuel economy monitor and the trip meter is on, the fuel economy data and trip A are reset simultaneously.
  Refer to Fuel Economy Monitor on page 4-71.
- *Only the trip meters record tenths of kilometers (miles).*
- *The trip record will be erased when:*
  - *The power supply is interrupted (blown fuse or the battery is disconnected).*
  - *The vehicle is driven over 9999.9 km (mile).*

▼ Odometer, Trip Meter, Trip Computer and Trip Meter Selector*

The display mode can be changed between trip meter A and trip meter B by pressing the selector while one of them is displayed. The selected mode will be displayed.

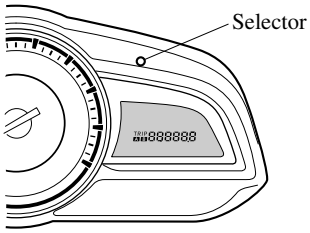

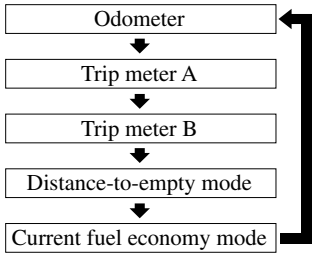

NOTE

When the ignition is switched to ACC or off, the odometer or trip meters cannot be displayed, however, pressing the selector can inadvertently switch the trip meters or reset them during an approximate ten-minute period in the following cases:

- *After the ignition is switched to off from ON.*
- *After the driver's door is opened.*

Odometer

The odometer records the total distance the vehicle has been driven.

Trip meter

The trip meter can record the total distance of two trips. One is recorded in trip meter A, and the other is recorded in trip meter B. For instance, trip meter A can record the distance from the point of origin, and trip meter B can record the distance from where the fuel tank is filled.
When trip meter A is selected, pressing the selector again within one second will change to trip meter B mode.
When trip meter A is selected, TRIP A will be displayed. When trip meter B is selected, TRIP B will be displayed.
The trip meter records the total distance the vehicle is driven until the meter is again reset. Return it to “0.0” by holding the selector depressed for 1 second or more.
Use this meter to measure trip distances and to compute fuel consumption.

NOTE

- ***(Vehicles with type B audio)***
  If the fuel economy data is reset using the fuel economy monitor, or trip A is reset using the trip meter when the function which synchronizes the fuel economy monitor and the trip meter is on, the fuel economy data and trip A are reset simultaneously.
  Refer to Fuel Economy Monitor on page 4-71.
- *Only the trip meters record tenths of kilometers (miles).*
- *The trip record will be erased when:*
  - *The power supply is interrupted (blown fuse or the battery is disconnected).*
  - *The vehicle is driven over 9999.9 km (mile).*

*Some models.

Trip Computer

The following information can be selected by pressing the selector with the ignition switched ON.

- Approximate distance you can travel on the available fuel
- Current fuel economy

If you have any problems with your trip computer, consult an Authorized Mazda Dealer.

Distance-to-empty mode

This mode displays the approximate distance you can travel on the remaining fuel based on the fuel economy.
The distance-to-empty will be calculated and displayed every second.

NOTE

- *Even though the distance-to-empty display may indicate a sufficient amount of remaining driving distance before refueling is required, refuel as soon as possible if the fuel level is very low or the low fuel warning light illuminates.*
- *The display may not change unless you add more than approximately 9 L (2.3 US gal, 1.9 Imp gal) of fuel.*
- *The distance-to-empty is the approximate remaining distance the vehicle can be driven until all the graduation marks in the fuel gauge indicating the remaining fuel supply disappear.*
- *If there is no past fuel economy information such as after first purchasing your vehicle or the information is deleted when the battery cables are disconnected, the actual distance-to empty/range may differ from the amount indicated.*

Current fuel economy mode

This mode displays the current fuel economy by calculating the amount of fuel consumption and the distance traveled. Current fuel economy will be calculated and displayed every 2 seconds.

When you've slowed to about 5 km/h (3 mph), - - - L/100 km (- - - mpg) will be displayed.

▼ Tachometer*

The tachometer shows engine speed in thousands of revolutions per minute (rpm).

⚠ CAUTION

Do not run the engine with the tachometer needle in the RED ZONE.
This may cause severe engine damage.

Type A

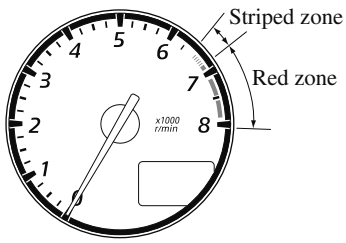

Type B

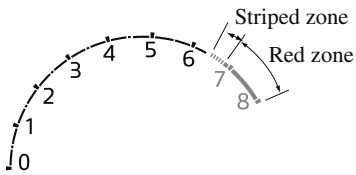

NOTE

When the tachometer needle enters the STRIPED ZONE, this indicates to the driver that the gears should be shifted before entering the RED ZONE.

▼ Fuel Gauge

The fuel gauge shows approximately how much fuel is remaining in the tank when the ignition is switched ON. We recommend keeping the tank over 1/4 full.

Full

1/4 Full

Empty

If the low fuel warning light illuminates or the fuel level is very low, refuel as soon as possible.
Refer to Taking Action on page 7-34.

NOTE

- *After refueling, it may require some time for the indicator to stabilize. In addition, the indicator may deviate while driving on a slope or curve since the fuel moves in the tank.*
- *The display indicating a quarter or less remaining fuel has more segments to show the remaining fuel level in greater detail.*
- *The direction of the arrow (◂⛽) indicates that the fuel-filler lid is on the left side of the vehicle.*

*Some models.

▼ Dashboard Illumination

(Without auto-light control)
When the position lights are turned on with the ignition switched ON, the brightness of the dashboard illumination is dimmed.
(With auto-light control)
When the position lights are turned on with the ignition switched ON, the brightness of the dashboard illumination is dimmed. However, when the light sensor detects that the surrounding area is bright such as when the position lights are turned on in the daytime, the dashboard illumination does not dim.

NOTE

- ***(With auto-light control)***
  When the ignition is switched ON in the early evening or at dusk, the dashboard illumination is dimmed for several seconds until the light sensor detects the brightness of the surrounding area, however, the dimmer may cancel after the brightness is detected.
- *When the position lights are turned on, the position lights indicator light in the instrument cluster turns on.*
  Refer to Headlights on page 4-43.

The brightness of the instrument cluster and dashboard illuminations can be adjusted by rotating the knob.

- The brightness decreases by rotating the knob to the left. A beep sound will be heard when the knob has been rotated to the maximum dim position.
- The brightness increases by rotating the knob to the right.

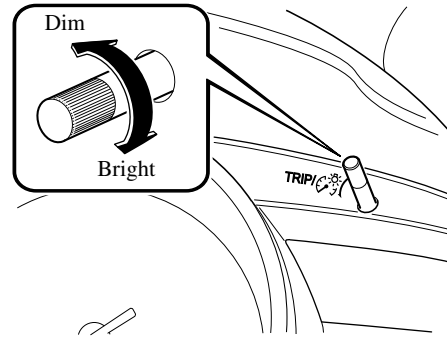

Function for cancelling illumination dimmer

The illumination dimmer can be canceled by rotating the dashboard illumination knob to the right until a beep sound is heard while the instrument cluster is dimmed with the ignition switched ON. If the instrument cluster's visibility is reduced due to glare from surrounding brightness, cancel the illumination dimmer.

NOTE

- *When the illumination dimmer is canceled, the instrument cluster cannot be dimmed even if the position lights are turned on.*
- *When the illumination dimmer is canceled, the screen in the center display switches to constant display of the daytime screen.*

▼ Outside Temperature Display

When the ignition is switched ON, the outside temperature is displayed.

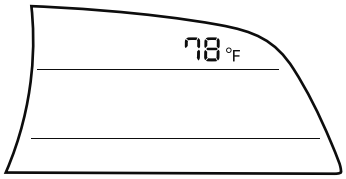

NOTE

- *Under the following conditions, the outside temperature display may differ from the actual outside temperature depending on the surroundings and vehicle conditions:*
  - *Significantly cold or hot temperatures.*
  - *Sudden changes in outside temperature.*
  - *The vehicle is parked.*
  - *The vehicle is driven at low speeds.*

Changing the Temperature Unit of the Outside Temperature Display (Vehicles with Type B audio)

The outside temperature unit can be switched between Celsius and Fahrenheit. Settings can be changed by operating the center display screen.
Refer to Personalization Features on page 9-9.

NOTE
When the temperature unit indicated in the outside temperature display is changed, the temperature unit indicated in the engine coolant gauge display changes in conjunction with it.

▼ Cruise Control Set Vehicle Speed Display*

The vehicle speed preset using the cruise control is displayed.

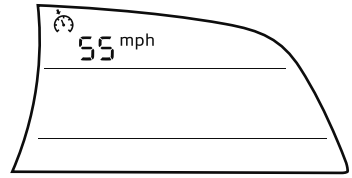

▼ Trip Computer and INFO Switch*

The following information can be selected by pressing the INFO switch with the ignition switched ON.

- Distance-to-empty mode
- Average fuel economy mode
- Current fuel economy mode
- Average vehicle speed

If you have any problems with your trip computer, consult an Authorized Mazda Dealer.

*Some models.

Distance-to-empty mode

This mode displays the approximate distance you can travel on the remaining fuel based on the fuel economy.

The distance-to-empty will be calculated and displayed every second.

NOTE

- *Even though the distance-to-empty display may indicate a sufficient amount of remaining driving distance before refueling is required, refuel as soon as possible if the fuel level is very low or the low fuel warning light illuminates.*
- *The display may not change unless you add more than approximately 9 L (2.3 US gal, 1.9 Imp gal) of fuel.*
- *The distance-to-empty is the approximate remaining distance the vehicle can be driven until all the graduation marks in the fuel gauge (indicating the remaining fuel supply) disappear.*
- *If there is no past fuel economy information such as after first purchasing your vehicle or the information is deleted when the battery cables are disconnected, the actual distance-to empty/range may differ from the amount indicated.*

Average fuel economy mode

This mode displays the average fuel economy by calculating the total fuel consumption and the total traveled distance since purchasing the vehicle, re-connecting the battery after disconnection, or resetting the data. The average fuel economy is calculated and displayed every minute.

To clear the data being displayed, press the INFO switch for more than 1.5 seconds. After pressing the INFO switch, - - - L/100 km (- - - mpg) will be displayed for about 1 minute before the fuel economy is recalculated and displayed.

Current fuel economy mode

This mode displays the current fuel economy by calculating the amount of fuel consumption and the distance traveled.

Current fuel economy will be calculated and displayed every 2 seconds.

When you've slowed to about 5 km/h (3 mph), - - - L/100 km (- - - mpg) will be displayed.

Average vehicle speed mode

This mode displays the average vehicle speed by calculating the distance and the time traveled since connecting the battery or resetting the data.
Average vehicle speed will be calculated and displayed every 10 seconds.

To clear the data being displayed, press the INFO switch for more than 1.5 seconds.
After pressing the INFO switch, - - - km/h (- - - mph) will be displayed for about 1 minute before the vehicle speed is recalculated and displayed.

Active Driving Display*

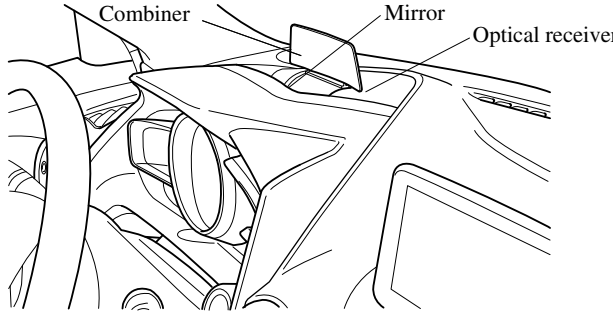

WARNING

Always adjust the display brightness and position with the vehicle stopped:
Adjusting the display brightness and position while driving the vehicle is dangerous as doing so could distract your attention from the road ahead and lead to an accident.

CAUTION

- *Do not try to adjust the angle or open/close the active driving display manually. Fingerprints on the display will make it difficult to view and using excessive force when operating it could cause damage.*
- *Do not place objects in the vicinity of the active driving display. The active driving display may not operate or any interference with its operation could cause damage.*
- *Do not place beverages near the active driving display. If water or other liquids are splashed on the active driving display, it could cause damage.*
- *Do not place objects above the active driving display or apply stickers to the dust-proof sheet/optical receiver as they will cause interference.*
- *A sensor is integrated to control the display's luminosity. If the optical receiver is covered, the display's luminosity will lower making the display difficult to view.*
- *Do not allow intense light to hit the optical receiver. Otherwise, it could cause damage.*

NOTE

- *Wearing polarized sunglasses will reduce the visibility of the active driving display due to the characteristics of the display.*
- *If the battery has been removed and re-installed or the battery voltage is low, the adjusted position may deviate.*

*Some models.

- *The display may be difficult to view or temporarily affected by weather conditions such as rain, snow, light, and temperature.*
- *If the audio system is removed, the active driving display cannot be operated.*

The active driving display indicates the following information:

- Blind Spot Monitoring (BSM) Operation Conditions and Warnings
  Refer to Blind Spot Monitoring (BSM) on page 4-90.
- Distance Recognition Support System (DRSS) Warnings
  Refer to Distance Recognition Support System (DRSS) on page 4-102.
- Traffic Sign Recognition System (TSR) traffic signs and Warnings
  Refer to Traffic Sign Recognition System (TSR) on page 4-96.
- Mazda Radar Cruise Control with Stop & Go function (MRCC with Stop & Go function) Operation Conditions and Warnings
  Refer to Mazda Radar Cruise Control with Stop & Go function (MRCC with Stop & Go function) on page 4-107.
- Lane Departure Warning System (LDWS) Operation Conditions and Warnings
  Refer to Lane Departure Warning System (LDWS) on page 4-84.
- Advanced Smart City Brake Support (Advanced SCBS) Warnings
  Refer to Advanced Smart City Brake Support (Advanced SCBS) on page 4-119.
- Smart City Brake Support (SCBS) Warnings
  Refer to Smart City Brake Support (SCBS) on page 4-123.
- Smart Brake Support (SBS) Warnings
  Refer to Smart Brake Support (SBS) on page 4-127.
- Cruise Control Operation Conditions
  Refer to Cruise Control on page 4-140.
- Navigation Guidance (vehicles with navigation system)
- Speed limit indicator (vehicles with navigation system)
- Vehicle Speed

Each setting/adjustment for the active driving display can be performed on the center display.

1. Select the ⚙ icon on the home screen and display the Settings screen.
2. Select the AD-Disp tab.
3. Select the desired item and perform the setting/adjustment.

   · Method for adjusting screen brightness (automatically/manually)
   · Screen brightness initial settings (automatic adjustment is selected)
   · Screen brightness adjustment (manual adjustment is selected)
   · Display position of active driving display (display height)
   · Active driving display ON/OFF (indication)
   · Navigation guidance ON/OFF
   · Reset settings (reset)

NOTE

· *The desired driving position (display position, brightness level, display information) can be called up after programming the position.*
Refer to Driving Position Memory on page 2-7.

Warning/Indicator Lights

Instrument Cluster varies depending on model and specifications.

Instrument Cluster

Type A
(Digital Speed Meter Type)

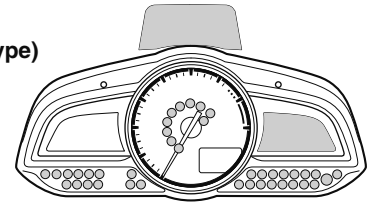

Type B
(Analog Speed Meter Type (With Tachometer))

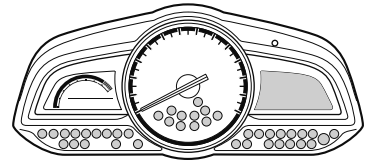

Type C
(Analog Speed Meter Type (Without Tachometer))

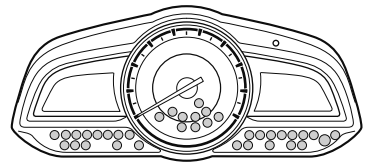

▼ Warning Lights

These lights turn on or flash to notify the user of the system operation status or a system malfunction.

Signal	Warning Lights	Page
BRAKE	Brake System Warning Light*1*2	7-27
ABS	ABS Warning Light*1	Electronic Brake Force Distribution System Warning 7-27
		ABS warning 7-30
	Charging System Warning Light*1	7-27
	Engine Oil Warning Light*1	7-27

Signal	Warning Lights	Page
(Red)	High Engine Coolant Temperature Warning Light*1	7-27
	Power Steering Malfunction Indicator Light*1	7-27
	Master Warning Light*1	7-30
	Electric Parking Brake (EPB) Warning Light*1	7-30
(Red)	Brake Pedal Operation Demand Warning Light*1	Flashing 4-61
		Buzzer & Flashing 7-30
	Check Engine Light*1	7-30
AT	*Automatic Transaxle Warning Light*1	7-30
	Air Bag/Front Seat Belt Pretensioner System Warning Light*1	7-30
4WD	*AWD Warning Light*1	7-30
	*Tire Pressure Monitoring System Warning Light*1	Flashing 7-30
		Turns on 7-34
(Red)	KEY Warning Light*1	Turns on 7-30
		Flashing 7-34
(Amber)	*High Beam Control System (HBC) Warning Light*1	7-30
	*Lane Departure Warning System (LDWS) Warning Light*1	Flashing 4-88
		Turns on 7-30
(Amber)	*Mazda Radar Cruise Control with Stop & Go function (MRCC with Stop & Go function) Warning Indication	7-30
	*LED Headlight Warning Light*1	7-30
	Low Fuel Warning Light	7-34

*Some models.

Instrument Cluster and Display

Signal	Warning Lights	Page
	Check Fuel Cap Warning Light*1	7-34
PASS	Seat Belt Warning Light (Front seat)	7-34
	Door-Ajar Warning Light	7-34
	*Low Washer Fluid Level Warning Light	7-34
(Amber)	*Smart Brake Support/Smart City Brake Support (SBS/SCBS) Warning Light	7-34

*1 The light turns on when the ignition is switched on for an operation check, and turns off a few seconds later or when the engine is started. If the light does not turn on or remains turned on, have the vehicle inspected at an Authorized Mazda Dealer.

*2 The light turns on continuously when the parking brake is applied.

▼ Indicator Lights

These lights turn on or flash to notify the user of the system operation status or a system malfunction.

Signal	Indicator Lights	Page
PASS AIRBAG OFF 2	Front Passenger Air Bag Deactivation Indicator Light*1	2-61
(Green)	KEY Indicator Light	3-9
	Security Indicator Light*1	3-40
	Wrench Indicator Light*1	4-29
(Blue)	Low Engine Coolant Temperature Indicator Light	4-29
	*Shift Position Indication	4-34
	Lights-On Indicator Light	4-43

 *Some models.

Signal	Indicator Lights	Page
	Headlight High-Beam Indicator Light	Headlight High-Low Beam 4-46
		Flashing the Headlights 4-46
	Turn Signal/Hazard Warning Indicator Lights	Turn and Lane-Change Signals 4-48
		Hazard Warning Flasher 4-55
(Green)	*Brake Pedal Operation demand Indicator Light	4-57
HOLD	AUTOHOLD Active Indicator Light*1	4-63
	*Mazda Radar Cruise Control with Stop & Go function (MRCC with Stop & Go function) indicator Light	4-115
	TCS/DSC Indicator Light*1	Traction Control System (TCS) 4-68
		Dynamic Stability Control (DSC) 4-70
		Turns on 7-30
TCS OFF	TCS OFF Indicator Light*1	4-69
SPORT	*Select Mode Indicator Light	4-73
(Green)	*High Beam Control System (HBC) Indicator Light	4-83
OFF	*Blind Spot Monitoring (BSM) OFF Indicator Light*1	Malfunction 7-30
		Except malfunction 4-95
OFF	*Lane Departure Warning System (LDWS) OFF Indicator Light*1	4-88
(Green)	*Mazda Radar Cruise Control with Stop & Go function (MRCC with Stop & Go function) Set Indicator Light	4-110

*Some models.

Instrument Cluster and Display

Signal	Indicator Lights	Page
(Red)	*Smart Brake Support/Smart City Brake Support (SBS/SCBS) Indicator Light*1	Advanced Smart City Brake Support (Advanced SCBS) 4-121
		Smart City Brake Support (SCBS) 4-125
		Smart Brake Support (SBS) 4-129
OFF	*Smart Brake Support/Smart City Brake Support (SBS/SCBS) OFF Indicator Light*1	Advanced Smart City Brake Support (Advanced SCBS) 4-121
		Smart City Brake Support (SCBS) 4-126
		Smart Brake Support (SBS) 4-129
(White)	*Cruise Main Indication	4-141
(White/Green)	*Cruise Set Indication/Indicator Light	4-141

*1 The light turns on when the ignition is switched on for an operation check, and turns off a few seconds later or when the engine is started. If the light does not turn on or remains turned on, have the vehicle inspected at an Authorized Mazda Dealer.

 *Some models.

▼ Wrench Indicator Light

When the ignition is switched ON, the wrench indicator light turns on and then turns off after a few seconds.

The wrench indicator light turns on when the preset maintenance period arrives. Verify the content and perform maintenance.
Refer to Maintenance Monitor on page 6-15.

▼ Low Engine Coolant Temperature Indicator Light (Blue)

The light illuminates continuously when the engine coolant temperature is low and turns off after the engine is warm.
If the low engine coolant temperature indicator light remains illuminated after the engine has been sufficiently warmed up, the temperature sensor could have a malfunction. Consult an Authorized Mazda Dealer.

Manual Transaxle Shift Pattern

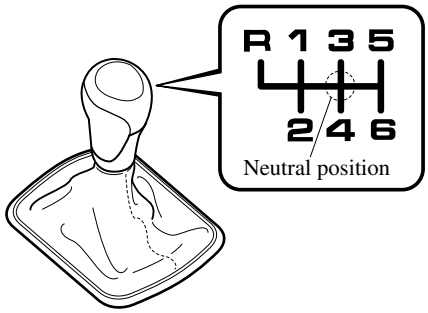

The shift pattern of the transaxle is conventional, as shown.

Depress the clutch pedal all the way down while shifting; then release it slowly.

Your vehicle is equipped with a device to prevent shifting to R (reverse) by mistake. Push the shift lever downward and shift to R.

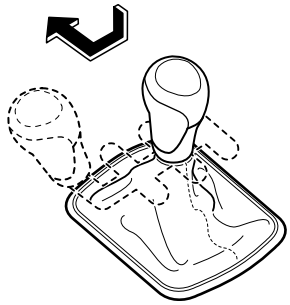

WARNING

Do not use sudden engine braking on slippery road surfaces or at high speeds:
Shifting down while driving on wet, snowy, or frozen roads, or while driving at high speeds causes sudden engine braking, which is dangerous. The sudden change in tire speed could cause the tires to skid. This could lead to loss of vehicle control and an accident.

Always leave the shift lever in 1 or R position and set the parking brake when leaving the vehicle unattended:
Otherwise the vehicle could move and cause an accident.

CAUTION

- *Keep your foot off the clutch pedal except when shifting gears. Also, do not use the clutch to hold the vehicle on an upgrade. Riding the clutch will cause needless clutch wear and damage.*
- *Do not apply any excessive lateral force to the shift lever when changing from 5th to 4th gear. This could lead to the accidental selection of 2nd gear, which could result in damage to the transaxle.*
- *Make sure the vehicle comes to a complete stop before shifting to R. Shifting to R while the vehicle is still moving may damage the transaxle.*

NOTE

- *If shifting to R is difficult, shift back into neutral, release the clutch pedal, and try again.*

▼ Gear Shift Indicator (GSI)

The GSI supports you to obtain optimum fuel economy and smooth driving. It displays the selected gear position in the instrument cluster as well as notifies the driver to change to the most suitable gear position corresponding to the actual driving condition.

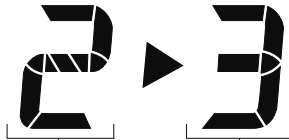

Indication	Condition
Numeral	The selected gear position is displayed.
▶ and numeral	Shift up or down to the indicated gear position is recommended.

⚠ CAUTION

Do not rely solely on the shift-up/shift-down recommendations by indications. The actual driving situation might require shift operations different from indication. To avoid the risk of accidents, the road and traffic conditions have to be judged correctly by the driver before shifting.

NOTE
The GSI turns off when the following operations are performed.

- *The vehicle is stopped.*
- *The vehicle is put in neutral.*
- *The vehicle is driven in reverse.*
- *The clutch is not fully engaged when accelerating from a stop.*
- *The clutch pedal remains depressed for 2 seconds or longer while driving.*

▼ Recommendations for Shifting

Upshifting

For normal acceleration, Mazda recommends these shift points:

Gear	Vehicle speed
1 to 2	24 km/h (15 mph)
2 to 3	42 km/h (26 mph)
3 to 4	60 km/h (37 mph)
4 to 5	74 km/h (46 mph)
5 to 6	79 km/h (49 mph)

For cruising, Mazda recommends these shift points:

Gear	Vehicle speed
1 to 2	13 km/h (8 mph)
2 to 3	29 km/h (18 mph)
3 to 4	48 km/h (30 mph)
4 to 5	63 km/h (39 mph)
5 to 6	69 km/h (43 mph)

Downshifting

When you must slow down in heavy traffic or on a steep **upgrade**, downshift before the engine starts to overwork. This reduces the chance of stalling and gives better acceleration when you need more speed.
On a steep **downgrade**, downshifting helps maintain safe speed and prolongs brake life.

Automatic Transaxle Controls

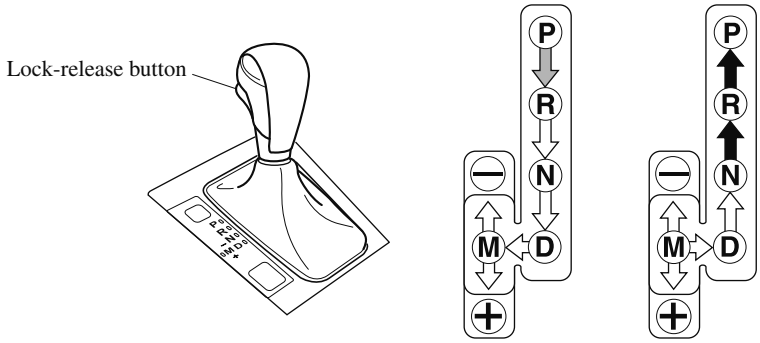

Various Lockouts:

Indicates that you must depress the brake pedal and hold in the lock-release button to shift (The ignition must be switched ON).

Indicates the shift lever can be shifted freely into any position.

Indicates that you must hold in the lock-release button to shift.

NOTE

The Sport AT has an option that is not included in the traditional automatic transaxle that gives the driver the option of selecting each gear instead of leaving it to the transaxle to shift gears. Even if you intend to use the automatic transaxle functions as a traditional automatic, you should also be aware that you can inadvertently shift into manual shift mode and an inappropriate gear may be retained as the vehicle speed increases. If you notice the engine speed going higher or hear the engine racing, confirm you have not accidentally slipped into manual shift mode (page 4-35).

Shift-Lock System

The shift-lock system prevents shifting out of P unless the brake pedal is depressed.

To shift from P:
1. Depress and hold the brake pedal.
2. Start the engine.
3. Press and hold the lock-release button.
4. Move the selector lever.

NOTE

- *When the ignition is switched to ACC or the ignition is switched off, the selector lever cannot be shifted from P position.*
- *The ignition cannot be switched to OFF if the selector lever is not in P position.*

▼ Shift-Lock Override

If the selector lever will not move from P using the proper shift procedure, continue to hold down the brake pedal.
1. Remove the shift-lock override cover using a cloth-wrapped flat head screwdriver.
2. Insert a screwdriver and push it down.

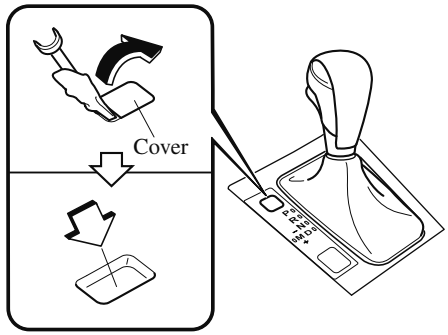

3. Press and hold the lock-release button.
4. Move the selector lever.

Take the vehicle to an Authorized Mazda Dealer to have the system checked.

Transaxle Ranges

- The shift position indication in the instrument cluster illuminates.
  Refer to Warning/Indicator Lights on page 4-24.
- The selector lever must be in P or N position to operate the starter.

P (Park)

P locks the transaxle and prevents the front wheels from rotating.

⚠ WARNING

Always set the selector lever to P position and set the parking brake:
Only setting the selector lever to the P position without using the parking brake to hold the vehicle is dangerous. If P fails to hold, the vehicle could move and cause an accident.

⚠ CAUTION

- *Shifting into P, N or R while the vehicle is moving can damage your transaxle.*
- *Shifting into a driving gear or reverse when the engine is running faster than idle can damage the transaxle.*

R (Reverse)

In position R, the vehicle moves only backward. You must be at a complete stop before shifting to or from R, except under rare circumstances as explained in Rocking the Vehicle (page 3-45).

N (Neutral)

In N, the wheels and transaxle are not locked. The vehicle will roll freely even on the slightest incline unless the parking brake or brakes are on.

WARNING

If the engine is running faster than idle, do not shift from N or P into a driving gear:
It's dangerous to shift from N or P into a driving gear when the engine is running faster than idle. If this is done, the vehicle could move suddenly, causing an accident or serious injury.

Do not shift into N when driving the vehicle:
Shifting into N while driving is dangerous. Engine braking cannot be applied when decelerating which could lead to an accident or serious injury.

CAUTION

Do not shift into N when driving the vehicle. Doing so can cause transaxle damage.

NOTE
Apply the parking brake or depress the brake pedal before moving the selector lever from N position to prevent the vehicle from moving unexpectedly.

D (Drive)

D is the normal driving position. From a stop, the transaxle will automatically shift through a 6-gear sequence.

M (Manual)

M is the manual shift mode position. Gears can be shifted up or down by operating the selector lever. Refer to Manual Shift Mode on page 4-35.

▼ Shift Position Indication

The selector position is indicated when the ignition is switched ON.

Gear position indication

In manual shift mode, the “M” of the shift position indication illuminates and the numeral for the selected gear is displayed.

▼ Active Adaptive Shift (AAS)

Active Adaptive Shift (AAS) automatically controls the transaxle shift points to best suit the road conditions and driver input. This improves driving feel. The transaxle may switch to AAS mode when driving up and down slopes, cornering, driving at high elevations, or depressing the accelerator pedal quickly while the selector lever is in the D position. Depending on the road and driving conditions/vehicle operations, gear shifting could be delayed or not occur, however, this does not indicate a problem because the AAS mode will maintain the optimum gear position.

Manual Shift Mode

The manual shift mode gives you the feel of driving a manual transaxle vehicle by allowing you to operate the selector lever manually. This allows you to control engine rpm and torque to the drive wheels much like a manual transaxle when more control is desired.
To change to manual shift mode, shift the lever from D to M.

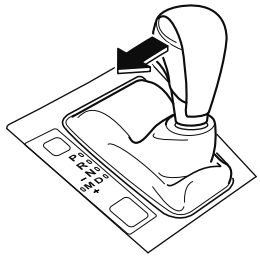

NOTE
Changing to manual shift mode while driving will not damage the transaxle.

To return to automatic shift mode, shift the lever from M to D.

NOTE

- *If you change to manual shift mode when the vehicle is stopped, the gear will shift to M1.*
- *If you change to manual shift mode without depressing the accelerator pedal when driving in D range, 5th gear/6th gear, the gear will shift to M4/M5.*

▼ Indicators

Manual shift mode indication

In manual shift mode, the “M” of the shift position indication in the instrument panel illuminates.

Gear position indication

The numeral for the selected gear illuminates.

Type A

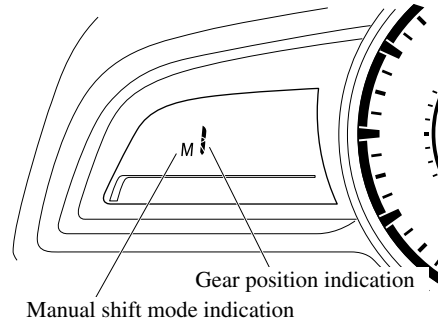

Type B

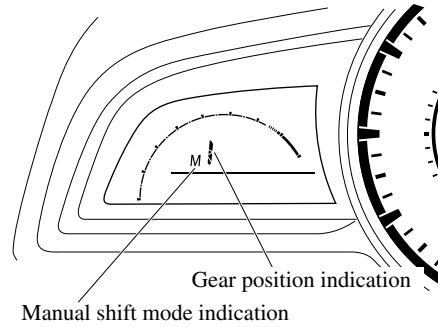

Type C

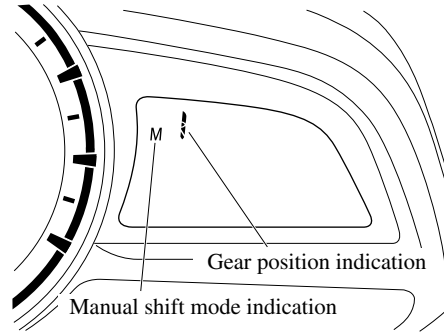

NOTE

- *If the gears cannot be shifted down when driving at higher speeds, the gear position indication will flash twice to signal that the gears cannot be shifted down (to protect the transaxle).*
- *If the automatic transaxle fluid (ATF) temperature becomes too high, there is the possibility that the transaxle will switch to automatic shift mode, canceling manual shift mode and turning off the gear position indication illumination. This is a normal function to protect the AT. After the ATF temperature has decreased, the gear position indication illumination turns back on and driving in manual shift mode is restored.*

▼ Manually Shifting Up

You can shift gears up by operating the selector lever or the steering shift switches*.
M1 → M2 → M3 → M4 → M5 → M6

Using selector lever

To shift up to a higher gear, tap the selector lever back + once.

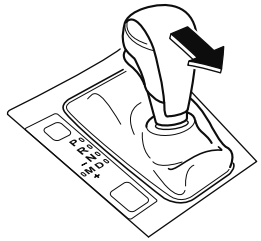

Using steering shift switch*

To shift up to a higher gear with the steering shift switches, pull the UP switch (**+/OFF**) toward you once with your fingers.

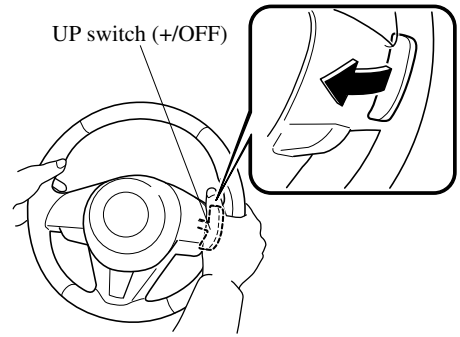

⚠ WARNING

Keep your hands on the steering wheel rim when using fingers on the steering shift switches:
Putting your hands inside the rim of the steering wheel when using the steering shift switches is dangerous. If the driver's air bag were to deploy in a collision, your hands could be impacted causing injury.

NOTE

- *When driving slowly, the gears may not shift up.*
- *Do not drive the vehicle with the tachometer needle in the RED ZONE while in manual shift mode. In addition, manual shift mode switches to automatic shift mode while the accelerator pedal is completely depressed.*

*Some models.

This function is canceled while the TCS is turned off. However, if the vehicle is continuously driven at a high rpm, the gears may automatically shift up to protect the engine.

- *The steering shift switch can be used temporarily even if the selector lever is in the D position while driving. In addition, it returns to automatic shift mode when the UP switch (**+/OFF**) is pulled rearward for a sufficient amount of time.*

▼ Manually Shifting Down

You can shift gears down by operating the selector lever or the steering shift switches*.
M6 → M5 → M4 → M3 → M2→ M1

Using selector lever

To shift down to a lower gear, tap the selector lever forward − once.

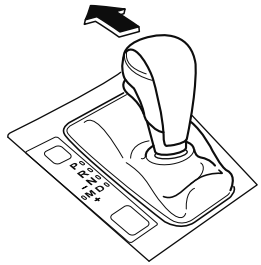

Using steering shift switch*

To shift down to a lower gear with the steering shift switches, pull the DOWN switch − toward you once with your fingers.

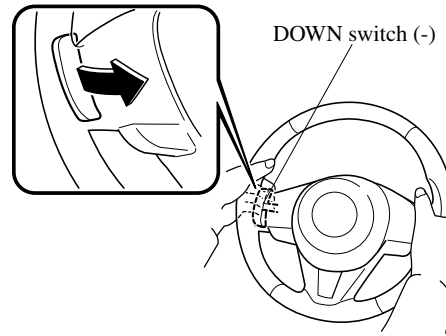

⚠ WARNING

Do not use engine braking on slippery road surfaces or at high speeds:
Shifting down while driving on wet, snowy, or frozen roads, or while driving at high speeds causes sudden engine braking, which is dangerous. The sudden change in tire speed could cause the tires to skid. This could lead to loss of vehicle control and an accident.

Keep your hands on the steering wheel rim when using fingers on the steering shift switches:
Putting your hands inside the rim of the steering wheel when using the steering shift switches is dangerous. If the driver's air bag were to deploy in a collision, your hands could be impacted causing injury.

*Some models.

NOTE

- *When driving at high speeds, the gear may not shift down.*
- *During deceleration, the gear may automatically shift down depending on vehicle speed.*
- *When depressing the accelerator fully, the transaxle will shift to a lower gear, depending on vehicle speed. However, the gears do not kickdown while the TCS is turned off.*

▼ Second Gear Fixed Mode

When the selector lever is moved back + while the vehicle speed is about 10 km/h (6.2 mph) or less, the transaxle is set in the second gear fixed mode. The gear is fixed in second while in this mode for easier acceleration from a stop and driving on slippery roads such as snow-covered roads.
If the selector lever is moved back + or forward − while in the second gear fixed mode, the mode will be canceled.

▼ Shift Gear (Shifting) Speed Limit

For each gear position while in the manual mode, the speed limit is set as follows: When the selector lever is operated within the range of the speed limit, the gear is shifted.

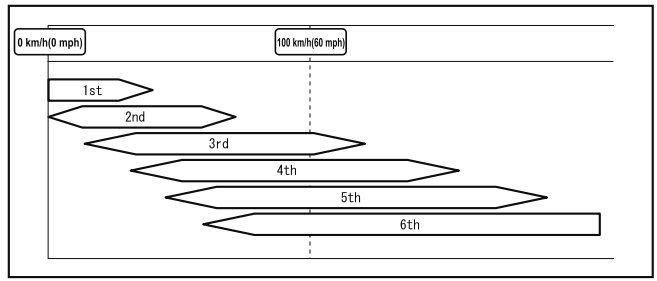

Shift up

The gear does not shift up while the vehicle speed is lower than the speed limit.

Shift down

The gear does not shift down while the vehicle speed exceeds the speed limit.
If the vehicle speed exceeds the speed limit and the gear does not shift down, the gear position indication flashes 2 times to notify the driver that the gear cannot be shifted.

Kickdown

When the accelerator pedal is depressed fully while driving, the gear shifts down.
However, the gears do not kickdown while the TCS is turned off.

NOTE
The gear also shifts down using kickdown while in the second gear fixed mode.

Auto-shift down

The gear shifts down automatically depending on the vehicle speed during deceleration.

NOTE
If the vehicle comes to a stop while in the second gear fixed mode, the gear remains in second.

▼ Recommendations for Shifting

Upshifting

For normal acceleration and cruising, Mazda recommends these shift points:

Gear	Vehicle speed*1
M1 to M2	24 km/h (15 mph)
M2 to M3	40 km/h (25 mph)
M3 to M4	65 km/h (40 mph)
M4 to M5	73 km/h (45 mph)
M5 to M6	81 km/h (50 mph)

*1 Always observe local speed limit regulations.

Downshifting

When you must slow down in heavy traffic or on a steep upgrade, downshift before the engine starts to overwork. This gives better acceleration when you need more speed.

On a steep downgrade, downshifting helps maintain safe speed and prolongs brake life.

Direct Mode*

Direct mode can be used for temporarily switching gears by operating the steering shift switch while the vehicle is being driven with the selector lever in the D position.
While in direct mode, the D and M indication illuminate and the gear position in use is illuminated.
Direct mode is canceled (released) under the following conditions.

- The UP switch (**+/OFF**) is pulled rearward for a certain amount of time or longer.
- The vehicle is driven for a certain amount of time or longer (time differs depending on the driving conditions while operating).
- The vehicle is stopped or moving at a slow speed.

Type A

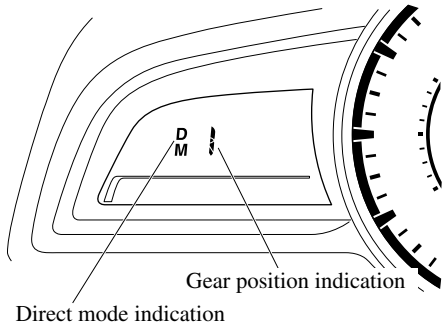

Type B

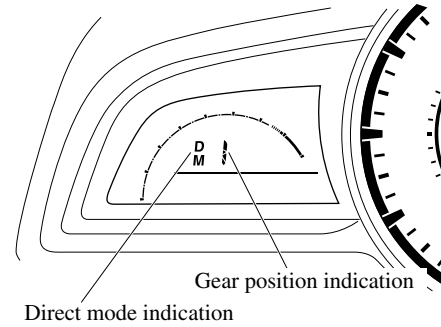

Type C

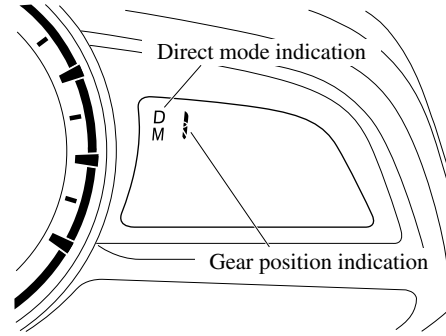

NOTE
Shifting up and down while in direct mode may not be possible depending on the vehicle speed. In addition, because direct mode is canceled (released) depending on the rate of acceleration or if the accelerator is fully depressed, use of the manual shift mode is recommended if you need to drive the vehicle in a particular gear for long periods.

*Some models.

Driving Tips

WARNING

Do not let the vehicle move in a direction opposite to the direction selected by the selector lever:
Do not let the vehicle move backward with the selector lever in a forward position, or do not let the vehicle move forward with the selector lever in the reverse position. Otherwise, the engine may stop, causing the loss of the power brake and power steering functions, and make it difficult to control the vehicle which could result in an accident.

Passing

For extra power when passing another vehicle or climbing steep grades, depress the accelerator fully. The transaxle will shift to a lower gear, depending on vehicle speed.

NOTE

- *The accelerator pedal may initially feel heavy as it is being depressed, then feel lighter as it is depressed further. This change in pedal force aids the engine control system in determining how much the accelerator pedal has been depressed for performing kickdown, and functions to control whether or not kickdown should be performed.*
- *While the selector lever is in the M position and the TCS is turned off, manual shift mode does not switch to automatic shift mode even if the accelerator pedal is completely depressed. Operate the selector lever.*

Climbing steep grades from a stop

To climb a steep grade from a stopped position:
1. Depress the brake pedal.
2. Shift to D or M1, depending on the load weight and grade steepness.
3. Release the brake pedal while gradually accelerating.

Descending steep grades

When descending a steep grade, shift to lower gears, depending on load weight and grade steepness. Descend slowly, using the brakes only occasionally to prevent them from overheating.

Lighting Control

▼ Headlights

Turn the headlight switch to turn the headlights, other exterior lights and dashboard illumination on or off.
When the lights are turned on, the lights-on indicator light in the instrument cluster turns on.

NOTE

- *If the light switch is left on, the lights will automatically switch off approximately 30 seconds after switching the ignition off.*
  The time setting can be changed.
  Refer to Personalization Features on page 9-9.
- *To prevent discharging the battery, do not leave the lights on while the engine is off unless safety requires them.*

Without auto-light control

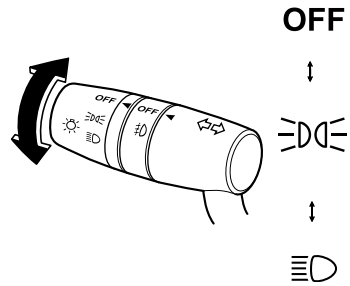

Switch Position	OFF					
Ignition Position	ON	ACC or OFF	ON	ACC or OFF	ON	ACC or OFF
Headlights	Off	Off	Off	Off	On	On*2
Daytime running lights	On*1	Off	On*1	Off	Off	Off
Taillights Parking lights License plate lights Side-marker lights	Off	Off	On	On*2	On	On*2

*1 The lights are turned on while the vehicle is driven.
*2 The lights are turned on for the specified period by the auto headlight off function.

With auto-light control

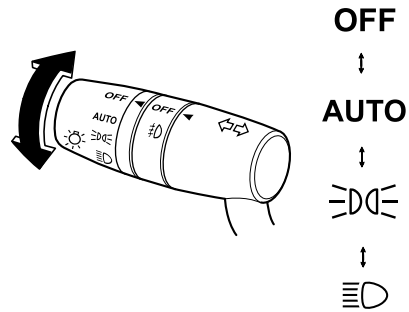

Switch Position	OFF		AUTO					
Ignition Position	**ON**	**OFF**	**ON**	**OFF**	**ON**	**OFF**	**ON**	**OFF**
Headlights	Off	Off	Auto*2	Auto*4	Off	Off	On	On*4
Daytime running lights	On*1	Off	On*3	Off	On*1	Off	Off	Off
Taillights Parking lights License plate lights Side-marker lights	Off	Off	Auto*2	Auto*4	On	On*4	On	On*4

*1 The lights are turned on while the vehicle is driven.
*2 The headlight and other light settings switch automatically depending on the surrounding brightness detected by the sensor.
*3 The lights are turned on while the vehicle is driven, and turned off when the headlights are turned on by the auto light function.
*4 The lights are turned on for the specified period by the auto headlight off function.

Auto-light control*

When the headlight switch is in the AUTO position and the ignition is switched ON, the light sensor senses the surrounding lightness or darkness and automatically turns the headlights, other exterior lights and dashboard illumination on or off (see chart above).

 *Some models.

CAUTION

➢ *Do not shade the light sensor by adhering a sticker or a label on the windshield. Otherwise the light sensor will not operate correctly.*

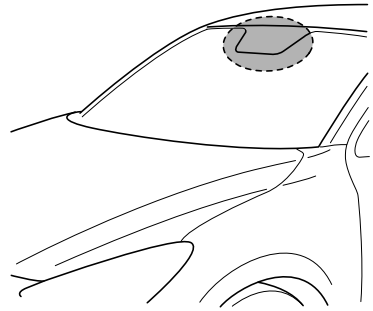

➢ *The light sensor also works as a rain sensor for the auto-wiper control. Keep hands and scrapers clear of the windshield when the wiper lever is in the* AUTO *position and the ignition is switched ON as fingers could be pinched or the wipers and wiper blades could be damaged when the wipers activate automatically. If you are going to clean the windshield, be sure the wipers are turned off completely when it is particularly tempting to leave the engine running. This is particularly important when clearing ice and snow.*

NOTE

- *The headlights, other exterior lights and dashboard illumination may not turn off immediately even if the surrounding area becomes well-lit because the light sensor determines that it is night time if the surrounding area is continuously dark for several minutes such as inside long tunnels, traffic jams inside tunnels, or in indoor parking lots. In this case, the lights turn off if the light switch is turned to the* OFF *position.*
- ***(Without auto headlight off function)***
  When the headlight switch is in the AUTO *position and the ignition is switched to ACC or the ignition is switched off, the headlights, other exterior lights and dashboard illumination will turn off.*
- *The dashboard illumination can be adjusted by rotating the knob in the instrument cluster. Also, the day/night mode can be changed by rotating the knob until a beep sound is heard. To adjust the brightness of the dashboard illumination:*
  Refer to Dashboard Illumination on page 4-17.
- *The sensitivity of the AUTO lights may be changed by an Authorized Mazda Dealer.*
  Refer to Personalization Features on page 9-9.

▼ Headlight High-Low Beam

The headlights switch between high and low beams by moving the lever forward or backward.

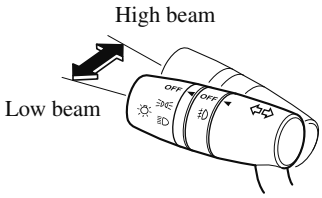

When the headlight high-beams are on, the headlight high-beam indicator light is turned on.

▼ Flashing the Headlights

Can be used when the ignition is switched ON.
To flash the headlights, pull the lever fully towards you (the headlight switch does not need to be on).

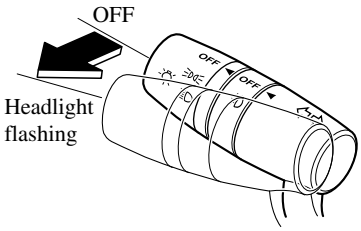

The headlight high-beam indicator light in the instrument cluster illuminates simultaneously. The lever will return to the normal position when released.

▼ Coming Home Light

The coming home light turns on the headlights (low beams) when the lever is operated.

To turn on the lights

When the lever is pulled with the ignition switched to ACC or OFF, the low beam headlights turn on.
The headlights turn off after a certain period of time has elapsed after the doors are closed.

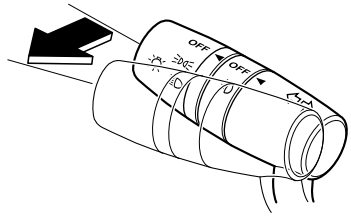

NOTE

- *The time until the headlights turn off after all of the doors are closed can be changed.*
  Refer to Personalization Features on page 9-9.
- *If no operations are done for 3 minutes after the lever is pulled, the headlights turn off.*

- *The headlights turn off if the lever is pulled again while the headlights are illuminated.*

▼ Leaving Home Light

The leaving home light turns on the lights when the transmitter unlock button is pressed while away from the vehicle.
The following lights turn on when the leaving home light is operated.
Low beams, Parking lights, Taillights, License plate lights.

To turn on the lights

When the ignition switch and the headlight switch are in the following conditions, the headlights will illuminate when the transmitter unlock button is pressed and the vehicle receives the transmitter signal. The headlights turn off after a certain period of time has elapsed (30 seconds).

- Ignition switch: off
- Headlight switch: AUTO, ≣DOE, or ≣D

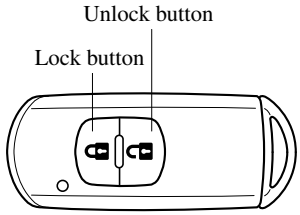

NOTE

- *Operation of the leaving home light can be turned on or off.*
  Refer to Personalization Features on page 9-9.
- *When the transmitter lock button is pressed and the vehicle receives the transmitter signal, the headlights turn off.*
- *When the headlight switch is turned to the* OFF *position, the headlights turn off.*

▼ Headlight Leveling*

The number of passengers and weight of cargo in the luggage compartment change the angle of the headlights.

The angle of the headlights will be automatically adjusted when turning on the headlights.

▼ Daytime Running Lights

Some countries require moving vehicles to have their lights on (daytime running lights) during the daytime.

The daytime running lights turn on automatically when the vehicle starts moving.
They turn off when the parking brake is operated or the shift lever is shifted to the P position (automatic transaxle vehicle).

NOTE
(Except Canada)
The daytime running lights can be deactivated.
Refer to Personalization Features on page 9-9.

*Some models.

Fog Lights*

The fog lights can be used when the ignition is switched ON.
Use this switch to turn on the fog lights.
The fog lights will improve visibility at night and during foggy conditions.
The fog lights turn on when the fog light switch is turned to the position and turn off when the switch is turned to the OFF position.
The fog lights turn on when the headlights are turned on. They will not turn on if the headlight switch is in the position or OFF position.

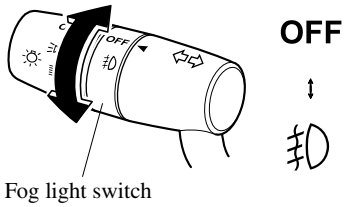

NOTE

- *The fog lights will turn off when the headlights are set at high beams.*
- ***(With auto-light control)***
  If the fog light switch is in the position and the headlight switch is in the AUTO *position, the fog lights will turn on when the headlights, the exterior lights turn on.*

Turn and Lane-Change Signals

The ignition must be switched ON to use the turn and lane-change signals.

▼ Turn Signals

Move the signal lever down (for a left turn) or up (for a right turn) to the stop position. The signal will self-cancel after the turn is completed.

If the indicator light continues to flash after a turn, manually return the lever to its original position.

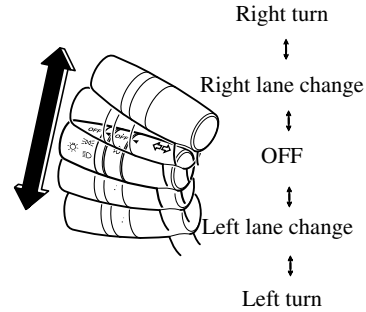

The turn signal indicators in the instrument cluster flash according to the operation of the turn signal lever to show which signal is working.

*Some models.

NOTE

- *If an indicator light stays on without flashing or if it flashes abnormally, one of the turn signal bulbs may be burned out.*
- *A personalized function is available to change the turn indicator sound volume. (page 9-9)*

▼ Lane-Change Signals

Move the lever halfway toward the direction of the lane change—until the indicator flashes— and hold it there. It will return to the off position when released.

▼ Three-Flash Turn Signal

After releasing the turn signal lever, the turn signal indicator flashes three times. The operation can be cancelled by moving the lever in the direction opposite to which it was operated.

NOTE
The three-flash turn signal function can be switched to operable/inoperable using the personalization function.
Refer to Personalization Features on page 9-9.

Windshield Wipers and Washer

The ignition must be switched ON to use the wipers.

⚠ WARNING

Use only windshield washer fluid or plain water in the reservoir:
Using radiator antifreeze as washer fluid is dangerous. If sprayed on the windshield, it will dirty the windshield, affect your visibility, and could result in an accident.

Only use windshield washer fluid mixed with anti-freeze protection in freezing weather conditions:
Using windshield washer fluid without anti-freeze protection in freezing weather conditions is dangerous as it could freeze on the windshield and block your vision which could cause an accident. In addition, make sure the windshield is sufficiently warmed using the defroster before spraying the washer fluid.

NOTE
If the windshield wipers are operated under cold weather conditions or during snowfall, they could stop due to accumulated snow on the windshield. If the windshield wipers stop due to accumulated snow on the windshield, park the vehicle in a safe place, turn the wiper switch off, and then remove the accumulated snow. If the wiper switch is turned to another position other than OFF, the wipers will operate. If the wipers do not operate even though the wiper switch is turned to a position other than OFF, consult an Authorized Mazda Dealer as soon as possible.

▼ Windshield Wipers

Turn the wipers on by pressing the lever up or down.

With intermittent wiper

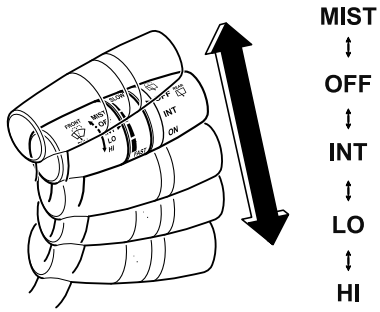

Switch Position	Wiper operation
MIST	Operation while pulling up lever
OFF	Stop
INT	Intermittent
LO	Low speed
HI	High speed

Variable-speed intermittent wipers

Set the lever to the intermittent position and choose the interval timing by rotating the ring.

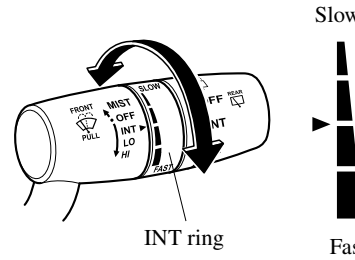

With auto-wiper control

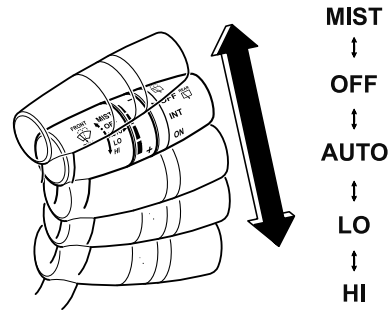

Switch Position	Wiper operation
MIST	Operation while pulling up lever
OFF	Stop
AUTO	Auto control
LO	Low speed
HI	High speed

Auto-wiper control

When the wiper lever is in the **AUTO** position, the rain sensor senses the amount of rainfall on the windshield and turns the wipers on or off automatically (off—intermittent—low speed—high speed).

The sensitivity of the rain sensor can be adjusted by turning the switch on the wiper lever.
From the center position (normal), rotate the switch upward for higher sensitivity (faster response) or rotate it downward for less sensitivity (slower response).

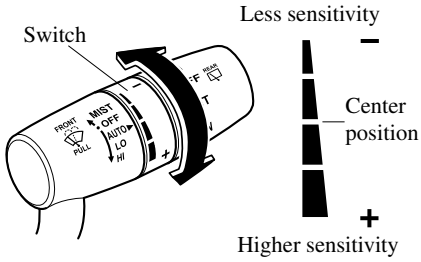

CAUTION

➢ *Do not shade the rain sensor by adhering a sticker or a label on the windshield. Otherwise the rain sensor will not operate correctly.*

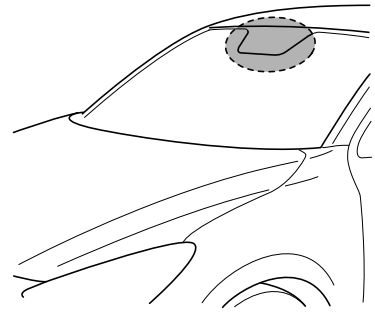

➢ *When the wiper lever is in the* **AUTO** *position and the ignition is switched ON, the wipers may move automatically in the following cases:*

- ➢ *If the windshield above the rain sensor is touched or wiped with a cloth.*
- ➢ *If the windshield is struck with a hand or other object from either outside or inside the vehicle.*

Keep hands and scrapers clear of the windshield when the wiper lever is in the **AUTO** *position and the ignition is switched ON as fingers could be pinched or the wipers and wiper blades damaged when the wipers activate automatically. If you are going to clean the windshield, be sure the wipers are turned off completely (when it is most likely that the engine is left running) this is particularly important when clearing ice and snow.*

NOTE

- *Switching the auto-wiper lever from the* OFF *to the* **AUTO** *position while driving activates the windshield wipers once, after which they operate according to the rainfall amount.*
- *The auto-wiper control may not operate when the rain sensor temperature is about −10 °C (14 °F) or lower, or about 85 °C (185 °F) or higher.*
- *If the windshield is coated with water repellent, the rain sensor may not be able to sense the amount of rainfall correctly and the auto-wiper control may not operate properly.*
- *If dirt or foreign matter (such as ice or matter containing salt water) adheres to the windshield above the rain sensor, or if the windshield is iced, it could cause the wipers to move automatically. However, if the wipers cannot remove this ice, dirt or foreign matter, the auto-wiper control will stop operation. In this case, set the wiper lever to the low speed position or high speed position for manual operation, or remove the ice, dirt or foreign matter by hand to restore the auto-wiper operation.*
- *If the auto-wiper lever is left in the* **AUTO** *position, the wipers could operate automatically from the effect of strong light sources, electromagnetic waves, or infrared light because the rain sensor uses an optical sensor. It is recommended that the auto-wiper lever be switched to the* OFF *position other than when driving the vehicle under rainy conditions.*
- *If the headlight switch and the windshield wiper switch are in* **AUTO**, *and the wipers are operated at low or high speed by the auto wiper control for several seconds, bad weather conditions are determined and the headlights may be turned on.*
- *The auto-wiper control functions can be turned off. Refer to Personalization Features on page 9-9.*

▼ Windshield Washer

Pull the lever toward you and hold it to spray washer fluid.

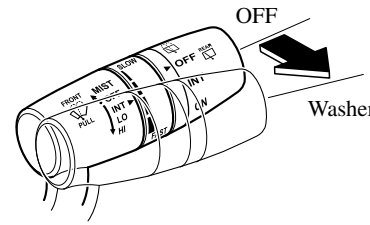

NOTE
If the windshield washer is turned on when the windshield wipers are not operating, the windshield wipers operate a few times.

If the washer does not work, inspect the fluid level (page 6-27). If the fluid level is normal, consult an Authorized Mazda Dealer.

Rear Window Wiper and Washer

The ignition must be switched ON to use the wiper.

▼ Rear Window Wiper

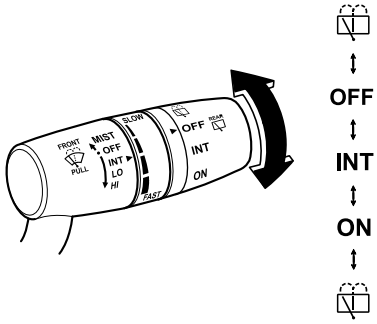

Turn the wiper on by turning the rear wiper/washer switch.

Switch Position	Wiper operation
OFF	Stop
INT	Intermittent
ON	Normal

▼ Rear Window Washer

To spray washer fluid, turn the rear wiper/washer switch to either of the position. After the switch is released, the washer will stop.
If the washer does not work, inspect the fluid level (page 6-27). If the fluid level is normal and the washer still does not work, consult an Authorized Mazda Dealer.

Rear Window Defogger

The rear window defogger clears fog from the rear window.

The ignition must be switched ON to use the defogger.

Press the switch to turn on the rear window defogger. The rear window defogger operates for about 15 minutes and then turns off automatically.
The indicator light illuminates when the defogger is operating.

To turn off the rear window defogger before the 15 minutes has elapsed, press the switch again.

Manual Climate Control

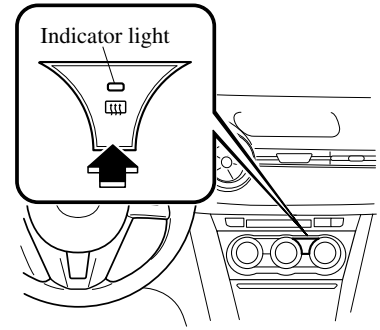

Fully Automatic Climate Control

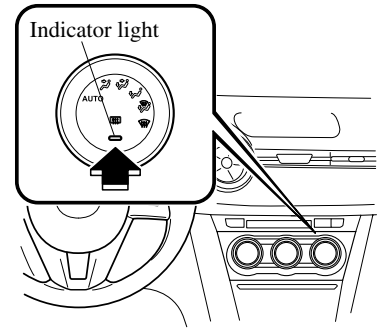

CAUTION

➢ *Do not use sharp instruments or window cleaners with abrasives to clean the inside of the rear window surface. They may damage the defogger grid inside the window.*

NOTE

- *This defogger is not designed for melting snow. If there is an accumulation of snow on the rear window, remove it before using the defogger.*
- *The rear window defogger setting can be changed. After changing the setting, the rear window defogger stops automatically after 15 minutes have elapsed and when the ambient temperature is high. When the ambient temperature is low, it continues to operate until the switch is pressed again.*
  Refer to Personalization Features on page 9-9.

▼ Mirror Defogger*

The mirror defoggers defrost the outside mirrors.

The mirror defoggers operate in conjunction with the rear window defogger.
To turn on the mirror defoggers, switch the ignition ON and press the rear window defogger switch (page 4-53).

Manual Climate Control

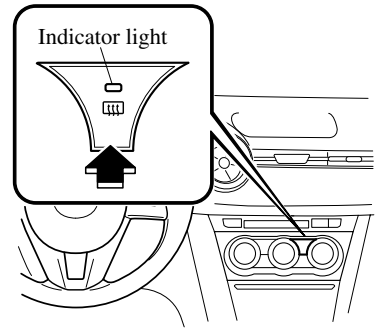

Fully Automatic Climate Control

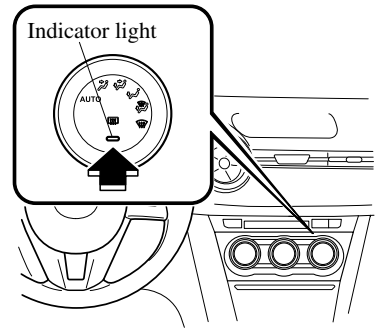

*Some models.

Horn

To sound the horn, press the mark on the steering wheel.

Hazard Warning Flasher

The hazard warning lights should always be used when you stop on or near a roadway in an emergency.

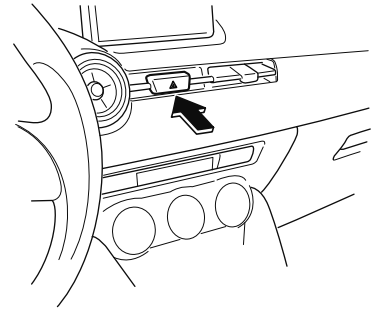

The hazard warning lights warn other drivers that your vehicle is a traffic hazard and that they must take extreme caution when near it.

Depress the hazard warning flasher and all the turn signals will flash. The hazard warning indicator lights in the instrument cluster flash simultaneously.

NOTE

- *The turn signals do not work when the hazard warning lights are on.*
- *Check local regulations about the use of hazard warning lights while the vehicle is being towed to verify that it is not in violation of the law.*

Brake System

▼ Foot Brake

This vehicle has power-assisted brakes that adjust automatically through normal use.

Should power-assist fail, you can stop by applying greater force than normal to the brake pedal. But the distance required to stop will be greater than usual.

WARNING

Do not coast with the engine stalled or turned off, find a safe place to stop:
Coasting with the engine stalled or turned off is dangerous. Braking will require more effort, and the brake's power-assist could be depleted if you pump the brake. This will cause longer stopping distances or even an accident.

Shift to a lower gear when going down steep hills:
Driving with your foot continuously on the brake pedal or steadily applying the brakes for long distances is dangerous. This causes overheated brakes, resulting in longer stopping distances or even total brake failure. This could cause loss of vehicle control and a serious accident. Avoid continuous application of the brakes.

Dry off brakes that have become wet by driving slowly, releasing the accelerator pedal and lightly applying the brakes several times until the brake performance returns to normal:
Driving with wet brakes is dangerous. Increased stopping distance or the vehicle pulling to one side when braking could result in a serious accident. Light braking will indicate whether the brakes have been affected.

CAUTION

- *Do not drive with your foot held on the brake pedal. Doing so could result in the following:*
  - *The brake parts will wear out more quickly.*
  - *The brakes can overheat and adversely affect brake performance.*
- *Always depress the brake pedal with the right foot. Applying the brakes with the unaccustomed left foot could slow your reaction time to an emergency situation resulting in insufficient braking operation.*

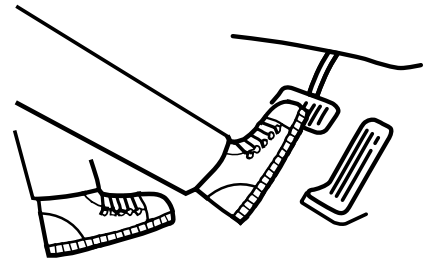

- *Wear shoes appropriate for driving in order to avoid your shoe contacting the brake pedal when depressing the accelerator pedal.*

▼ Electric Parking Brake (EPB)

The EPB equipment applies the parking brake using an electric motor. When the parking brake is applied, the EPB switch indicator light turns on.

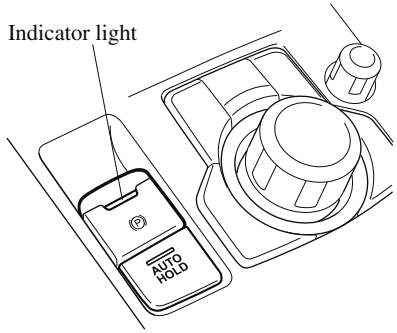

⚠ WARNING

Do not drive the vehicle with the parking brake applied:
If the vehicle is driven with the parking brake applied, the brake parts may generate heat and the brake system may not operate, leading to an accident. Before driving, release the parking brake and verify that the brake system warning light is turned off.

NOTE

- *The parking brake cannot be applied or released while the vehicle battery is dead.*
- *If the EPB is repeatedly applied and released it may stop operating to prevent overheating of the motor. If this occurs, wait approx. 1 minute before operating the EPB switch again.*
- *An operation sound occurs when applying or releasing the parking brake, however, this does not indicate a malfunction.*
- *If the EPB is not used for long periods, an automatic inspection of the system is performed while the vehicle is parked. An operation sound can be heard, however, this does not indicate a problem.*
- *When the parking brake is applied and the ignition is switched OFF, an operation sound can be heard, however, this does not indicate a problem.*
- *The brake pedal may move while the parking brake is being applied or released, however, this does not indicate a problem.*
- *If the EPB switch is continually pulled while driving the vehicle, the parking brake will be applied and the EPB warning beep will be activated. When the switch is released, the parking brake is released and the beep stops.*
- *If the parking brake is applied with the ignition switched off or in ACC, the brake system warning light in the instrument cluster and the indicator light in the switch may turn on for 15 seconds.*
- *When running the vehicle through an automatic car wash, it may be necessary to switch the ignition off with the parking brake released depending on the type of automatic car wash.*

When applying the parking brake

The parking brake can be applied regardless of the ignition switch position. Securely depress the brake pedal and pull up the EPB switch.
The parking brake is applied and the brake system warning light and the EPB switch indicator light turn on.
Refer to Warning/Indicator Lights on page 4-24.

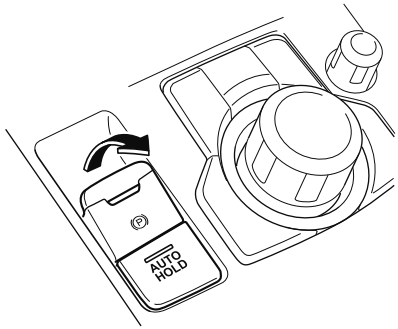

When releasing the parking brake

The EPB can be released while the ignition is switched ON or the engine is running. When the parking brake is released, the brake system warning light and the EPB switch indicator light turn off.

Parking brake manual release

Firmly depress the brake pedal and press the EPB switch.

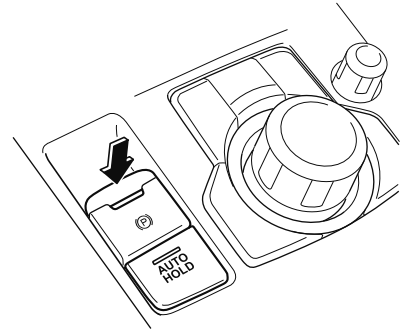

If the EPB switch is pressed without depressing the brake pedal, the indicator light in the instrument cluster notifies the driver that the brake is not depressed.
The brake pedal operation demand indicator light (green) in the instrument cluster turns on.

(Green)

Parking brake automatic release

If the accelerator pedal is depressed with the parking brake applied and all of the following conditions met, the parking brake is released automatically.

- The engine is running.
- The driver's door is closed.
- The driver's seat belt is fastened.

(Manual transaxle)

- The change lever is in a position other than neutral.
- The clutch pedal is depressed halfway

(Automatic transaxle)

- Selector lever is in the D, M, or R position

NOTE
If something such as the driver's foot contacts the accelerator pedal with the engine running and the parking brake applied, the parking brake may be released automatically. If you do not intend to drive immediately, shift the change lever (manual transaxle) to the neutral position, or shift the selector lever (automatic transaxle) to the P or N position.

▼ Warning Light

The warning light turns on when the system has a malfunction.
Refer to Contact Authorized Mazda Dealer and Have Vehicle Inspected on page 7-30.

▼ Brake Pad Wear Indicator

When the disc brake pads become worn, the built-in wear indicators contact the disc plates. This causes a screeching noise to warn that the pads should be replaced.

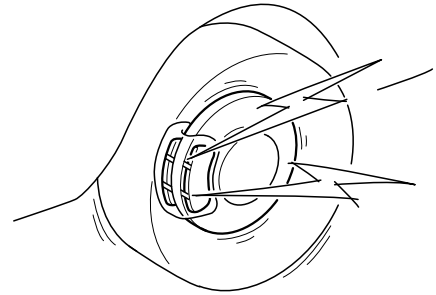

When you hear this noise, consult an Authorized Mazda Dealer as soon as possible.

⚠ WARNING

Do not drive with worn disc pads:
Driving with worn disc pads is dangerous. The brakes could fail and cause a serious accident. As soon as you hear a screeching noise consult an Authorized Mazda Dealer.

▼ Brake Assist

During emergency braking situations when it is necessary to depress the brake pedal with greater force, the brake assist system provides braking assistance, thus enhancing braking performance.

When the brake pedal is depressed hard or depressed more quickly, the brakes apply more firmly.

NOTE

- *When the brake pedal is depressed hard or depressed more quickly, the pedal will feel softer but the brakes will apply more firmly. This is a normal effect of the brake assist operation and does not indicate a malfunction.*
- *When the brake pedal is depressed hard or depressed more quickly, a motor/pump operation noise may be heard. This is a normal effect of the brake assist and does not indicate a malfunction.*
- *The brake assist equipment does not supersede the functionality of the vehicle's main braking system.*

AUTOHOLD

The AUTOHOLD function automatically holds the vehicle stopped, even if you take your foot off the brake pedal. This function can be best used while stopped in traffic or at a traffic light. The brakes are released when you resume driving the vehicle such as by releasing the clutch pedal with the shift lever shifted to a position other than the neutral position (manual transaxle vehicle) or depressing the accelerator pedal (automatic transaxle vehicle).

WARNING

Do not rely completely on the AUTOHOLD function:
The AUTOHOLD function is only designed to assist the brake operation while the vehicle is stopped. Neglecting to operate the brakes and relying only on the AUTOHOLD system is dangerous and could result in an unexpected accident if the vehicle were to suddenly move. Operate the brakes appropriately in accordance with the road and surrounding conditions.

Do not release your foot from the brake pedal while the vehicle is stopped on a steep grade:
Because there is a possibility of the vehicle not being held in the stopped position by the AUTOHOLD function, the vehicle may move unexpectedly and result in an accident.

Do not use the AUTOHOLD function on slippery roads such as icy or snow-covered roads, or unpaved roads:
Even if the vehicle is held in the stopped position by the AUTOHOLD function, the vehicle may move unexpectedly and result in an accident. Operate the accelerator pedal, brakes, or steering wheel appropriately as necessary.

Immediately depress the brake pedal in the following cases:
Because the AUTOHOLD function is canceled forcibly, the vehicle may move unexpectedly and result in an accident.

➢ *The brake pedal operation demand warning light (red) flashes and the warning sound is activated at the same time.*

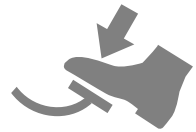

(Red)

Always apply the parking brake when parking the vehicle:
Not applying the parking brake when parking the vehicle is dangerous as the vehicle may move unexpectedly and result in an accident. When parking the vehicle, shift the selector lever to the P position (automatic transaxle vehicle) and apply the parking brake.

CAUTION

If you stop operating the accelerator pedal before the vehicle starts moving, the force holding the vehicle in the stopped position may weaken. Firmly depress the brake pedal or depress the accelerator pedal to accelerate the vehicle.

NOTE

- *Under the following conditions, a problem with the AUTOHOLD is occurring. Have your vehicle inspected at an Authorized Mazda Dealer as soon as possible.*
  - *The brake pedal operation demand warning light (red) in the instrument cluster flashes and the warning sound is activated for about five seconds while the AUTOHOLD is operating or when you press the AUTOHOLD switch.*
- *If you switch the ignition OFF while the AUTOHOLD is operating, the parking brake is applied automatically to assist you with parking the vehicle.*
- *The AUTOHOLD is canceled when the selector lever/shift lever is shifted to R position while the vehicle is on level ground, or facing up a hill or grade (as shown below).*

← : Driving in reverse (selector lever/shift lever in R)

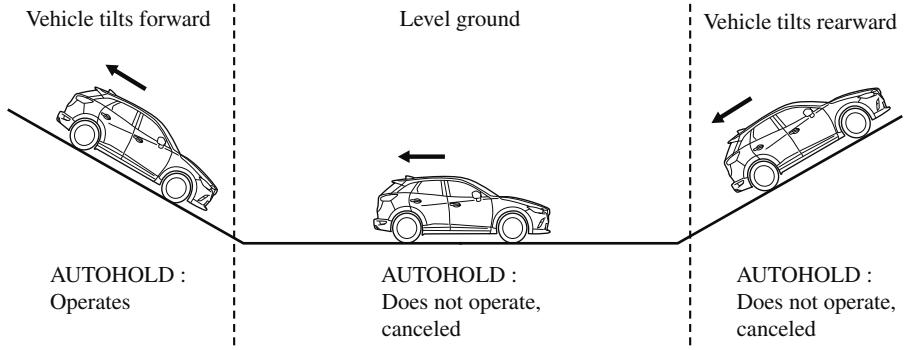

▼ AUTOHOLD System is Turned On

Press the AUTOHOLD switch and when the AUTOHOLD standby indicator light turns on, the AUTOHOLD function turns on.

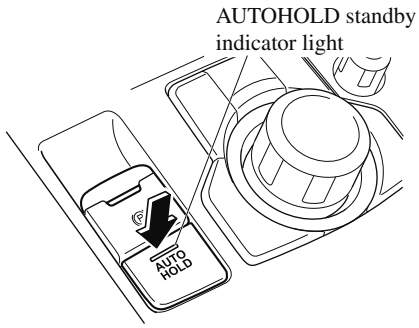

NOTE
When all of the following conditions are met, the AUTOHOLD standby indicator light turns on when the AUTOHOLD switch is pressed and the AUTOHOLD function turns on.

- *The ignition is switched ON (engine is running).*
- *The driver's seat belt is fastened.*
- *The driver's door is closed.*
- *There is no problem with the AUTOHOLD function.*

To operate AUTOHOLD and hold the brakes

1. Depress the brake pedal and bring the vehicle to a complete stop.
2. The AUTOHOLD active indicator light in the instrument cluster turns on and the brakes are held.

3. The vehicle is held in its stopped position even with the brake pedal released.

NOTE
When all of the following conditions are met, the AUTOHOLD operates and the brakes are held.

- *The ignition is switched ON (engine is running).*
- *The vehicle is stopped.*
- *The brake pedal is being depressed.*
- *The AUTOHOLD active indicator light turns on.*
- *The accelerator pedal is not depressed.*
- *The driver's seat belt is fastened.*
- *The driver's door is closed.*
- *There is no problem with the AUTOHOLD function.*
- *The parking brake is released.*
- *There is no problem with the electric parking brake (EPB) function.*
- ***(Automatic transaxle vehicle)***
  The selector lever is in a position other than R position or the vehicle tilts forward with the selector lever in the R position.

To release AUTOHOLD and start driving the vehicle

If you do any of the following actions to resume driving the vehicle, the brakes release automatically and the AUTOHOLD active indicator light turns off.

- **(Manual transaxle vehicle)**
  You start to release the clutch pedal with the shift lever shifted to a position other than the neutral position
- **(Automatic transaxle vehicle)**
  - The accelerator pedal is depressed.
  - The vehicle tilts rearward or the selector lever is shifted to the R position on level ground.

NOTE

- *If the electric parking brake (EPB) switch is pulled while the AUTOHOLD is operating, the parking brake is applied and the AUTOHOLD is released. In addition, if the parking brake is released under this condition, the AUTOHOLD operates to hold the brakes.*
- *Under the following conditions, the parking brake is automatically applied and the AUTOHOLD is released. The AUTOHOLD is re-enabled when the conditions before the AUTOHOLD is released are restored.*
  - *The driver's seat belt is unfastened.*
  - *The driver's door is opened.*
- *When about 10 minutes or longer have passed since the AUTOHOLD operation started, the parking brake is automatically applied. Because the AUTOHOLD is restored when releasing the parking brake, the hold on the brakes by AUTOHOLD function resumes.*
- ***(Manual transaxle vehicle)***
  When starting to drive the vehicle forward or in reverse on a down slope, depress the clutch pedal and shift the shift lever to the appropriate position for driving in the desired direction, and then depress the accelerator pedal to release the AUTOHOLD.

▼ AUTOHOLD System is Turned Off

Depress the brake pedal and press the AUTOHOLD switch. The AUTOHOLD is turned off and the AUTOHOLD standby indicator light turns off.

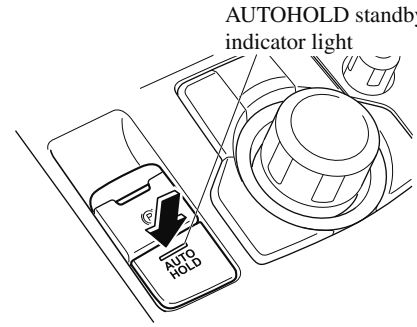

NOTE

- *When the brakes are not held such as while driving the vehicle, the AUTOHOLD can be turned off only by pressing the AUTOHOLD switch.*
- *If the AUTOHOLD switch is pressed without depressing the brake pedal while the AUTOHOLD is operating (AUTOHOLD active indicator light is turned on), the brake pedal operation demand indicator light (green) in the instrument cluster turns on to notify the driver that it is necessary to depress the brake pedal.*

(Green)

- *If any of the following conditions occurs while the AUTOHOLD function is operating (AUTOHOLD active indicator light is turned on), the parking brake is applied automatically and the AUTOHOLD function turns off. For the electric parking brake (EPB) operation, refer to the electric parking brake (EPB) on page 4-57.*
  - *The ignition is switched OFF.*
  - *There is a problem with the AUTOHOLD function.*

Hill Launch Assist (HLA)

HLA is a function which assists the driver in accelerating from a stop while on a slope. When the driver releases the brake pedal and depresses the accelerator pedal while on a slope, the function prevents the vehicle from rolling. The braking force is maintained automatically after the brake pedal is released on a steep grade.
For vehicles with a manual transaxle, HLA operates on a downward slope when the shift lever is in the reverse (R) position, and on an upward slope when the shift lever is in a position other than the reverse (R) position.
For vehicles with an automatic transaxle, HLA operates on a downward slope when the selector lever is in the reverse (R) position, and on an upward slope when the selector lever is in a forward gear.

⚠ WARNING

Do not rely completely on HLA:
HLA is an auxiliary device for accelerating from a stop on a slope. The system only operates for about two seconds and therefore, relying only on the system, when accelerating from a stop is dangerous because the vehicle may move (roll) unexpectedly and cause an accident.
The vehicle could roll depending on the vehicle's load or if it is towing something. In addition, for vehicles with a manual transaxle, the vehicle could still roll depending on how the clutch pedal or the accelerator pedal is operated.
Always confirm the safety around the vehicle before starting to drive the vehicle.

NOTE

- *HLA does not operate on a gentle slope. In addition, the gradient of the slope on which the system will operate changes depending on the vehicle's load.*
- *HLA does not operate if the parking brake is applied, the vehicle has not stopped completely, or the clutch pedal is released.*
- *While HLA is operating, the brake pedal may feel stiff and vibrate, however, this does not indicate a malfunction.*
- *HLA does not operate while the TCS/DSC indicator light is illuminated. Refer to Contact Authorized Mazda Dealer and Have Vehicle Inspected on page 7-30.*
- *HLA does not turn off even if the TCS OFF switch is pressed to turn off the TCS.*

Antilock Brake System (ABS)

The ABS control unit continuously monitors the speed of each wheel. If one wheel is about to lock up, the ABS responds by automatically releasing and reapplying that wheel's brake.

The driver will feel a slight vibration in the brake pedal and may hear a chattering noise from the brake system. This is normal ABS system operation. Continue to depress the brake pedal without pumping the brakes.

The warning light turns on when the system has a malfunction.
Refer to Contact Authorized Mazda Dealer and Have Vehicle Inspected on page 7-30.

WARNING

Do not rely on ABS as a substitute for safe driving:
The ABS cannot compensate for unsafe and reckless driving, excessive speed, tailgating (following another vehicle too closely), driving on ice and snow, and hydroplaning (reduced tire friction and road contact because of water on the road surface). You can still have an accident.

NOTE

- *Braking distances may be longer on loose surfaces (snow or gravel, for example) which usually have a hard foundation. A vehicle with a normal braking system may require less distance to stop under these conditions because the tires will build up a wedge of surface layer when the wheels skid.*
- *The sound of the ABS operating may be heard when starting the engine or immediately after starting the vehicle, however, it does not indicate a malfunction.*

Traction Control System (TCS)

The Traction Control System (TCS) enhances traction and safety by controlling engine torque and braking. When the TCS detects driving wheel slippage, it lowers engine torque and operates the brakes to prevent loss of traction.

This means that on a slick surface, the engine adjusts automatically to provide optimum power to the drive wheels, limiting wheel spin and loss of traction.

The warning light turns on when the system has a malfunction.
Refer to Contact Authorized Mazda Dealer and Have Vehicle Inspected on page 7-30.

WARNING

Do not rely on the Traction Control System (TCS) as a substitute for safe driving:
The Traction Control System (TCS) cannot compensate for unsafe and reckless driving, excessive speed, tailgating (following another vehicle too closely), and hydroplaning (reduced tire friction and road contact because of water on the road surface). You can still have an accident.

Use snow tires or tire chains and drive at reduced speeds when roads are covered with ice and/or snow:
Driving without proper traction devices on snow and/or ice-covered roads is dangerous. The Traction Control System (TCS) alone cannot provide adequate traction and you could still have an accident.

NOTE
To turn off the TCS, press the TCS OFF switch (page 4-69).

▼ TCS/DSC Indicator Light

This indicator light stays on for a few seconds when the ignition is switched ON. If the TCS or DSC is operating, the indicator light flashes.

If the light stays on, the TCS, DSC or the brake assist system may have a malfunction and they may not operate correctly. Take your vehicle to an Authorized Mazda Dealer.

NOTE

- *In addition to the indicator light flashing, a slight lugging sound will come from the engine. This indicates that the TCS/DSC is operating properly.*
- *On slippery surfaces, such as fresh snow, it will be impossible to achieve high rpm when the TCS is on.*

▼ TCS OFF Indicator Light

TCS OFF

This indicator light stays on for a few seconds when the ignition is switched ON. It also illuminates when the TCS OFF switch is pressed and TCS is switched off. Refer to TCS OFF Switch on page 4-69.

If the light remains illuminated and the TCS is not switched off, take your vehicle to an Authorized Mazda Dealer. The DSC may have a malfunction.

▼ TCS OFF Switch

Press the TCS OFF switch to turn off the TCS. The TCS OFF indicator light in the instrument cluster will illuminate.

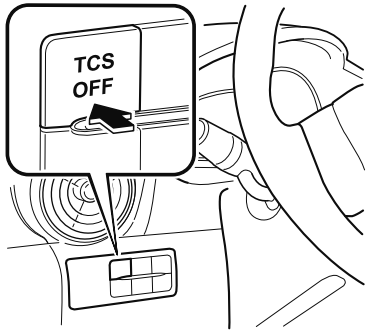

Press the switch again to turn the TCS back on. The TCS OFF indicator light will turn off.

NOTE

- *When TCS is on and you attempt to free the vehicle when it is stuck, or drive it out of freshly fallen snow, the TCS (part of the DSC system) will activate. Depressing the accelerator will not increase engine power and freeing the vehicle may be difficult. When this happens, turn off the TCS.*
- *If the TCS is off when the engine is turned off, it automatically activates when the ignition is switched ON.*
- *Leaving the TCS on will provide the best traction.*
- *If the TCS OFF switch is pressed and held for 10 seconds or more, the TCS OFF switch malfunction detection function operates and the TCS system activates automatically. The TCS OFF indicator light turns off while the TCS system is operative.*

Dynamic Stability Control (DSC)

The Dynamic Stability Control (DSC) automatically controls braking and engine torque in conjunction with systems such as ABS and TCS to help control side slip when driving on slippery surfaces, or during sudden or evasive maneuvering, enhancing vehicle safety.

Refer to ABS (page 4-67) and TCS (page 4-68).

DSC operation is possible at speeds greater than 20 km/h (12 mph).

The warning light turns on when the system has a malfunction.
Refer to Contact Authorized Mazda Dealer and Have Vehicle Inspected on page 7-30.

WARNING

Do not rely on the Dynamic Stability Control as a substitute for safe driving:
The Dynamic Stability Control (DSC) cannot compensate for unsafe and reckless driving, excessive speed, tailgating (following another vehicle too closely), and hydroplaning (reduced tire friction and road contact because of water on the road surface). You can still have an accident.

CAUTION

- *The DSC may not operate correctly unless the following are observed:*
  - *Use tires of the correct size specified for your Mazda on all four wheels.*
  - *Use tires of the same manufacturer, brand and tread pattern on all four wheels.*
  - *Do not mix worn tires.*
- *The DSC may not operate correctly when tire chains are used or a temporary spare tire is installed because the tire diameter changes.*

▼ TCS/DSC Indicator Light

This indicator light stays on for a few seconds when the ignition is switched ON. If the TCS or DSC is operating, the indicator light flashes.

If the light stays on, the TCS, DSC or the brake assist system may have a malfunction and they may not operate correctly. Take your vehicle to an Authorized Mazda Dealer.

Fuel Economy Monitor*

For vehicles with type B audio, the Fuel Consumption information is displayed by operating each icon in the display.
In addition, after completing a trip, the total energy efficiency to date is displayed in the ending display when the ending display is turned on.

1. Select the icon on the home screen to display the applications screen.
2. Select the “Fuel Economy Monitor”.
3. Select the icon at the bottom left of the screen to display the menu in the lower part of the screen.
4. Select the icon in the menu and perform the operation. Each icon operates as follows:

Indication on display	Control status
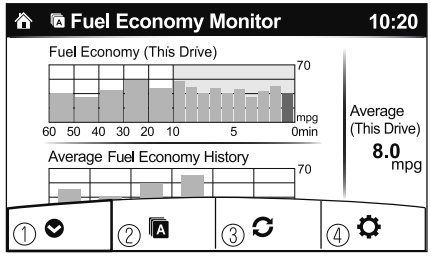	① Hides the menu display.
	② Displays the application screen.
	③ Resets the fuel economy data.
	④ Displays the following setting screen. •Ending display on/off switching •On/off switching for function which synchronizes (links) reset of fuel economy data with trip meter (TRIP A)

NOTE
The fuel economy monitor screen after the ignition is switched from ON to OFF is changed to the original fuel economy monitor screen when the ignition is switched ON the next time.

▼ Fuel Consumption Display

Information regarding the fuel economy is displayed.

Indication on display	Control status
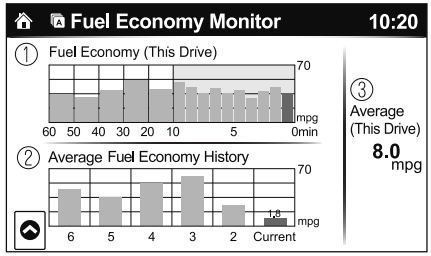	① Displays the fuel economy for the past 60 minutes. •Displays the fuel economy every minute for the past 1 to 10 minutes. •Displays the fuel economy every 10 minutes for the past 10 to 60 minutes.
	② Displays the average fuel economy over the past 5 resets and after the current reset.
	③ Calculates the average fuel economy every minute after vehicle travel begins, and displays it.

*Some models.

NOTE

- *The fuel economy data is synchronized (linked) with the average fuel economy displayed in the trip computer.*
- *To reset the fuel economy data, press the ↻ icon in the menu. (The average fuel economy displayed in the trip computer resets at the same time.)*
- *After resetting the fuel economy data, "-- -" is displayed while the average fuel economy is being calculated.*

▼ Ending Screen Display

If the ending display on the fuel economy monitor is on when the ignition is switched from ON to OFF, the information regarding the fuel economy is displayed.

▼ Fuel Economy Data Reset and Trip Meter (TRIP A) Synchronization (Linking)

Because the average fuel economy indication on the instrument cluster display is linked with the "Average Fuel Economy History" (Current) indication on the center display, when one is reset the other is also reset.
In addition, switching between reset and no reset of the average fuel economy indication on the instrument cluster display and the "Average Fuel Economy History" (Current) indication on the center display when resetting the trip meter (TRIP A) is possible.

Reset operation item	Synchronized (linked) and reset information		
	Trip meter (TRIP A)	Average fuel economy on instrument cluster display	"Average Fuel Economy History" (Current) indication on the center display
Trip meter (TRIP A)	X	X/—*1	X/—*1
Average fuel economy on instrument cluster display	—	X	X
"Average Fuel Economy History" (Current) indication on the center display	—	X	X

X: Reset
—: Not reset
*1 Can be personalized.
Refer to Personalization Features on page 9-9.

Drive Selection*

Drive selection is a system to switch the vehicle's drive mode. When the sport mode is selected, vehicle's response against accelerator operation is enhanced. This provides additional quick acceleration which may be needed to safely make maneuvers such as lane changes, merging onto freeways, or passing other vehicles.

CAUTION

Do not use the sport mode when driving on slippery roads such as wet or snow-covered roads. It may cause tire slipping.

NOTE

- *When the sport mode is selected, driving at higher engine speeds increases and it may increase fuel consumption. Mazda recommends that you cancel the sport mode on normal driving.*
- *Drive mode cannot be switched in the following conditions:*
  - *ABS/TCS/DSC is operating*
  - *The Mazda Radar Cruise Control with Stop & Go function (MRCC with Stop & Go function) System/cruise control is operating.*
  - *Steering wheel is being operated abruptly*

▼ Drive Selection Switch

Press the drive selection switch forward ("SPORT") to select the sport mode. Pull the drive selection switch back ("—") to cancel the sport mode.

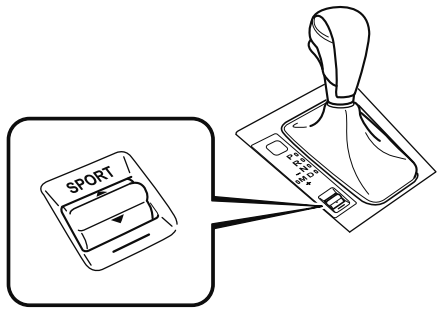

NOTE

- *When the ignition is switched off, the sport mode is canceled.*
- *Depending on the driving conditions when sport mode is selected, the vehicle may perform shift-down or slightly accelerate.*

▼ Select Mode Indicator Light

When the sport mode is selected, the select mode indicator light turns on in the instrument cluster.

*Some models.

NOTE
If the drive selection cannot be switched to sport mode, the select mode indicator light flashes to notify the driver.

i-ACTIV AWD Operation*

AWD provides excellent drivability on snow-covered and ice-packed roads, sand and mud, as well as on steep slopes and other slippery surfaces.
A system malfunction or operation conditions are indicated by a warning.
Refer to Contact Authorized Mazda Dealer and Have Vehicle Inspected on page 7-30.

WARNING

Never spin a wheel that is off the ground:
Spinning a wheel that is off the ground as a result of the vehicle being stuck or in a ditch is dangerous. The drive assembly could be seriously damaged which could lead to an accident or could even lead to overheating, oil leakage, and a fire.

▼ AWD Driving

This vehicle has not been designed for the purpose of off-road driving or rallies. Do not attempt to drive over uneven or rocky surfaces, or across rivers.
Although this vehicle is equipped with AWD, acceleration, steering and braking operations should be conducted in the same manner as with a non-AWD vehicle, with the emphasis placed on safe driving.

▼ Tires and Tire Chains

The condition of the tires plays a large role in the performance of the vehicle.
Moreover, to prevent adverse effects to the drive assembly, please note the following:

Tires

- When replacing tires, always replace all front and rear tires at the same time.
- All tires must be of the same size, manufacture, brand and tread pattern. Pay particular attention when equipping snow or other types of winter tires.
- Do not mix tread-worn tires with normal tires.
- Inspect tire inflation pressures at the specified periods adjust to the specified pressures.

NOTE
Check the tire inflation pressure label attached to driver's door frame for the correct tire inflation pressure.

- Make sure to equip the vehicle with genuine wheels of the specified size, on all wheels. With AWD, the system is calibrated for all four wheels being of the same dimensions.

Tire chains

- Install tire chains to the front tires.
- Do not use tire chains on the rear wheels.
- Do not drive the vehicle faster than 30 km/h (19 mph) with the tire chains installed.
- Do not drive the vehicle with tire chains on road conditions other than snow or ice.

▼ Towing

If the vehicle requires towing, have it towed with all four wheels completely off the ground.
Refer to Towing Description on page 7-24.

*Some models.

Power Steering

- Power steering is only operable when the engine is running. If the engine is off or if the power steering system is inoperable, you can still steer, but it requires more physical effort.
  If the steering feels stiffer than usual during normal driving or the steering vibrates, consult an Authorized Mazda Dealer.
- The warning light notifies the driver of system abnormalities and operation conditions.
  In addition, the buzzer may also activate depending on the system abnormality or operation condition.
  Refer to Stop Vehicle in Safe Place Immediately on page 7-27.
  Refer to Power Steering Warning Buzzer on page 7-46.

CAUTION

Never hold the steering wheel to the extreme left or right for more than 5 seconds with the engine running. This could damage the power steering system.

i-ACTIVSENSE*

i-ACTIVSENSE is a collective term covering a series of advanced safety and driver support systems which make use of a Forward Sensing Camera (FSC) and radar sensors. These systems consist of active safety and pre-crash safety systems.
These systems are designed to assist the driver in safer driving by reducing the load on the driver and helping to avert collisions or reduce their severity. However, because each system has its limitations, always drive carefully and do not rely solely on the systems.

▼ Active Safety Technology

Active Safety Technology supports safer driving by helping the driver to recognize potential hazards and avert accidents.

Driver awareness support systems

Nighttime visibility

Adaptive Front Lighting System (AFS)..... page 4-80
High Beam Control System (HBC).....page 4-81

Left/right side and rear side detection

Lane Departure Warning System (LDWS).....page 4-84
Blind Spot Monitoring (BSM)..... page 4-90

Road sign recognition

Traffic Sign Recognition System (TSR)..... page 4-96

Inter-vehicle distance recognition

Distance Recognition Support System (DRSS).....page 4-102

Rear obstruction detection when leaving a parking space

Rear Cross Traffic Alert (RCTA).....page 4-104

Driver support systems

Inter-vehicle distance

Mazda Radar Cruise Control with Stop & Go function (MRCC with Stop & Go function)
.....page 4-107

*Some models.

▼ Pre-Crash Safety Technology

Pre-crash safety technology is designed to assist the driver in averting collisions or reduce their severity in situations where they cannot be avoided.

Collision damage reduction in low vehicle speed range

Forward driving

Smart City Brake Support (SCBS)..... page 4-123
Advanced Smart City Brake Support (Advanced SCBS).....page 4-119

Collision damage reduction in medium/high speed range

Smart Brake Support (SBS).....page 4-127

▼ Camera and Sensors

Forward Sensing Camera (FSC)

The Forward Sensing Camera (FSC) detects lane indications and recognizes headlights, taillights and city lights during nighttime driving. In addition, it also detects the vehicle ahead, pedestrians, or obstructions. The following systems also use the Forward Sensing Camera (FSC).

- High Beam Control system (HBC)
- Lane Departure Warning System (LDWS)
- Traffic Sign Recognition System (TSR)
- Mazda Radar Cruise Control with Stop & Go function (MRCC with Stop & Go function)
- Advanced Smart City Brake Support (Advanced SCBS)
- Smart City Brake Support (SCBS)
- Smart Brake Support (SBS)

The Forward Sensing Camera (FSC) is installed at the top of the windshield near the rearview mirror.
Refer to Forward Sensing Camera (FSC) on page 4-130.

Radar sensor (front)

The radar sensor (front) functions by detecting the radio waves reflected off a vehicle ahead sent from the radar sensor. The following systems also use the radar sensor (front).

- Mazda Radar Cruise Control with Stop & Go function (MRCC with Stop & Go function)
- Distance Recognition Support System (DRSS)
- Smart Brake Support (SBS)

The radar sensor (front) is mounted behind the radiator grille.
Refer to Radar Sensor (Front) on page 4-135.

Radar sensors (rear)

The radar sensors (rear) function by detecting the radio waves reflected off a vehicle approaching from the rear or an obstruction sent from the radar sensors. The following systems also use the radar sensors (rear).

・Blind Spot Monitoring (BSM)
・Rear Cross Traffic Alert (RCTA)

The radar sensors (rear) are installed inside the rear bumper, one each on the left and right sides.
Refer to Radar Sensors (Rear) on page 4-138.

Adaptive Front Lighting System (AFS)*

The adaptive front lighting system (AFS) automatically adjusts the headlight beams to the left or right in conjunction with the operation of the steering wheel after the headlights have been turned on and the vehicle speed is about 2 km/h (2 mph) or higher.
A system malfunction or operation conditions are indicated by a warning.
Refer to Contact Authorized Mazda Dealer and Have Vehicle Inspected on page 7-30.

NOTE
The Adaptive Front Lighting System (AFS) function can be switched to operable/inoperable using the personalization function.
Refer to Personalization Features on page 9-9.

 *Some models.

High Beam Control System (HBC)*

The HBC determines the conditions in front of the vehicle using the Forward Sensing Camera (FSC) while driving in darkness to automatically switch the headlights between high and low beams.
Refer to Forward Sensing Camera (FSC) on page 4-130.
While driving the vehicle at a speed of about 30 km/h (19 mph) or more, the headlights are switched to high beams when there are no vehicles ahead or approaching in the opposite direction.
The system switches the headlights to low beams when one of the following occurs:

- The system detects a vehicle or the headlights/lights of a vehicle approaching in the opposite direction.
- The vehicle is driven on roads lined with streetlamps or on roads in well-lit cities and towns.
- The vehicle is driven at less than about 20 km/h (12 mph).

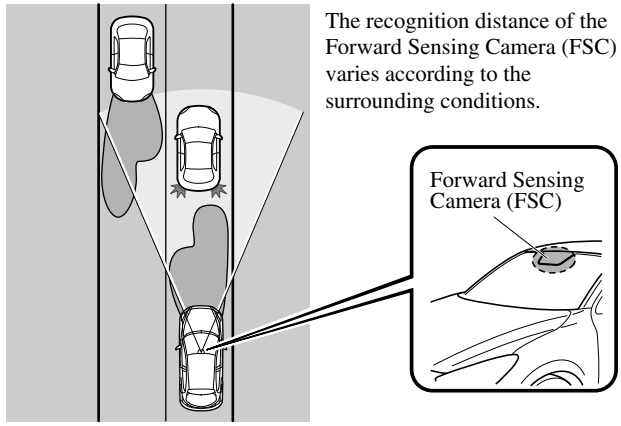

The recognition distance of the Forward Sensing Camera (FSC) varies according to the surrounding conditions.

The warning light turns on when the system has a malfunction.
Refer to Contact Authorized Mazda Dealer and Have Vehicle Inspected on page 7-30.

CAUTION

- *Do not adjust the vehicle height, modify the headlight units, or remove the camera, otherwise the system will not operate normally.*
- *Do not rely excessively on the HBC and drive the vehicle while paying sufficient attention to safety. Switch the headlights between the high beams and low beams manually if necessary.*

*Some models.

NOTE
The timing in which the system switches the headlights changes under the following conditions. If the system does not switch the headlights appropriately, manually switch between high and low beams according to the visibility as well as road and traffic conditions.

- *When there are sources of light in the area such as street lamps, illuminated signboards, and traffic signals.*
- *When there are reflective objects in the surrounding area such as reflective plates and signs.*
- *When visibility is reduced under rain, snow and foggy conditions.*
- *When driving on roads with sharp turn or hilly terrain.*
- *When the headlights/rear lamps of vehicles in front of you or in the opposite lane are dim or not illuminated.*
- *When there is sufficient darkness such as at dawn or dusk.*
- *When the luggage compartment is loaded with heavy objects or the rear passenger seats are occupied.*
- *When visibility is reduced due to a vehicle in front of you spraying water from its tires onto your windshield.*

▼ To Operate the System

The HBC operates to switch the headlights automatically between high and low beams after the ignition is switched ON and the headlight switch is in the AUTO and high beam position.
The HBC determines that it is dark based on the brightness of the surrounding area. At the same time, the HBC indicator light (green) in the instrument cluster illuminates.

The HBC determines that it is dark based on the brightness of the surrounding area.

NOTE

- *When the vehicle speed is about 30 km/h (19 mph) or more, the headlights automatically switch to high beams when there are no vehicles ahead or approaching in the opposite direction. When the vehicle speed is less than about 20 km/h (12 mph), the HBC switches the headlights to low beams.*
- *The low beams may not switch to high beams when cornering.*
- *Operation of the HBC function can be disabled. Refer to Personalization Features on page 9-9.*

▼ Manual Switching

Switching to low beams

Shift the lever to the low beam position.
The HBC indicator light (green) turns off.

Switching to high beams

Turn the headlight switch to the ≣D position.
The HBC indicator light (green) turns off and the ≣D is illuminated.

Lane Departure Warning System (LDWS)*

The LDWS notifies the driver that the vehicle may be deviating from its lane.
The system detects the white or yellow lines on the traffic lane using the Forward Sensing Camera (FSC) and if it determines that the vehicle may be deviating from its lane, it notifies the driver using the active driving display (vehicles with active driving display), and by flashing the LDWS warning light and activating the LDWS warning beep.
Use the LDWS when you drive the vehicle on roads with white or yellow lines.
Refer to Forward Sensing Camera on page 4-130.

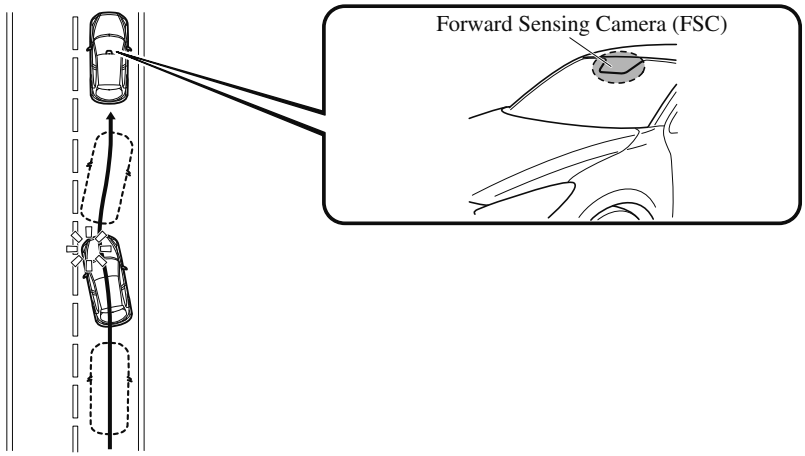

The warning light illuminates when the system has a malfunction.
Refer to Warning Lights on page 4-24.

WARNING

Do not use the LDWS under the following conditions:
The system may not operate adequately according to the actual driving conditions, resulting in an accident.

- *Driving on roads with tight curves.*
- *Driving under bad weather conditions (rain, fog, and snow).*

 *Some models.

The functions of the LDWS have limitations:
Always stay on course using the steering wheel and drive with care. The system is not designed to compensate for a driver's lack of caution and if you rely too much on the LDWS it could lead to an accident. The driver is responsible for assuring lane changes and other maneuvers. Always pay attention to the direction in which the vehicle is traveling and the vehicle's surroundings.

⚠ CAUTION

Do not modify the suspension. If the vehicle height or the damping force of the suspensions is changed, the LDWS may not operate correctly.

NOTE

- *If your vehicle deviates from its traffic lane, the LDWS operates (warning sound and indicator light). Steer the vehicle adequately to drive the vehicle to the center of the lane.*
- *When the turn signal lever is operated for a lane change, the LDWS warning is automatically canceled. The LDWS warning becomes operable when the turn signal lever is returned and the system detects the white or yellow lines.*
- *If the steering wheel, accelerator pedal, or brake pedal is operated abruptly and the vehicle moves close to a white or yellow line, the system determines that the driver is making a lane change and the LDWS warning is automatically canceled.*
- *The LDWS may not operate during the period immediately after the vehicle has deviated from its lane and the LDWS has operated, or the vehicle deviates from its lane repeatedly within a short period of time.*
- *The LDWS does not operate if it does not detect the white or yellow lines of the traffic lane.*
- *Under the following conditions, the LDWS may not be able to detect white or yellow lines correctly and the LDWS may not operate correctly.*
  - *If an object placed on the dashboard is reflected in the windshield and picked up by the camera.*
  - *Heavy luggage is loaded in the luggage compartment or on the rear seat and the vehicle is inclined.*
  - *The tire pressures are not adjusted to the specified pressure.*
  - *When the vehicle is driven on the entry and exit to or from the rest area or tollgate of a highway.*
  - *The white or yellow lines are less visible because of dirt or paint flaking.*
  - *The vehicle ahead is running near a white or yellow line and the line is less visible.*
  - *A white or yellow line is less visible because of bad weather (rain, fog, or snow).*
  - *The vehicle is driven on a temporary lane or section with a closed lane due to construction.*

- *A misleading line is picked up on the road such as a temporary line for construction, or because of shade, lingering snow, or grooves filled with water.*
- *The surrounding brightness suddenly changes such as when entering or exiting a tunnel.*
- *The illumination of the headlights is weakened because of dirt or the optical axis is deviated.*
- *The windshield is dirty or foggy.*
- *Back-light is reflecting from the road surface.*
- *The road surface is wet and shiny after rain, or there are puddles on the road.*
- *The shade of a guardrail parallel to a white or yellow line is on the road.*
- *The width of a lane is excessively narrow or wide.*
- *The road is excessively uneven.*
- *The vehicle is shaken after hitting a road bump.*
- *There are two or more adjacent white or yellow lines.*
- *There are various road markings or lane markings of various shapes near an intersection.*

▼ When the System Operates

1. The system goes on operation standby when the LDWS OFF switch is pressed and the LDWS OFF indicator light in the instrument cluster turns off. For vehicles equipped with the active driving display, the driving lane (border lines) is indicated in the display.

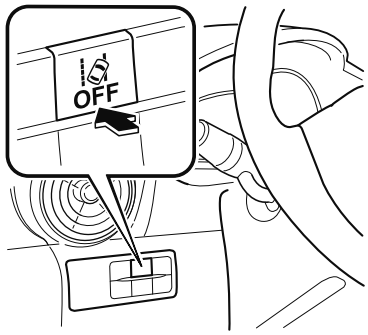

2. Drive the vehicle in the center of the driving lane while the LDWS OFF indicator light is turned off. The system becomes operational when all of the following conditions are met.
   - The vehicle is driven in the center of the driving lane with the white or yellow lines on the left and right sides, or on either side.
   - The vehicle speed is about 70 km/h (44 mph) or faster.
   - The vehicle is driven on a straight road or road with gentle curves.

   The LDWS does not operate in the following cases:
   - The system cannot detect white or yellow lines.
   - The vehicle speed is less than about 65 km/h (40 mph).
   - The vehicle is making a sharp turn.
   - The vehicle is making a curve at an inadequate speed.

NOTE

- *The LDWS does not operate until the system detects a white or yellow line on either the left or right.*
- *When the system detects a white or yellow line on one side only, the system will activate the warning only when the vehicle deviates on the side where the white or yellow line is being detected.*
- *The distance and warning sensitivity (likelihood of a warning) which the system uses to determine the possibility of a lane departure can be changed. Refer to Personalization Features on page 9-9.*

Auto cancel

In the following cases, the LDWS cancels automatically and the LDWS warning light in the instrument cluster turns on.

- The temperature inside the camera is high or low.
- The windshield around the camera is foggy.
- The windshield around the camera is blocked by an obstruction, causing poor forward visibility.

The LDWS is enabled automatically when the operation conditions are met, and the LDWS warning light turns off.

Auto cancel warning

When the following operations are performed, the LDWS determines that the driver intends to make a lane change and the LDWS warning is canceled automatically. The LDWS is enabled automatically after the driver performs the operation.

- The steering wheel is operated abruptly.
- The brake pedal is depressed abruptly.
- The accelerator pedal is depressed abruptly.
- The turn signal lever is operated (after the turn signal lever is returned, the LDWS may not operate for about 3 seconds which is the period of time required to make a lane correction).

NOTE
After about 30 seconds have elapsed with the turn signal lever left operating, the LDWS warning may operate if the vehicle is close to a white or yellow line.

▼ Canceling the System

Press the LDWS OFF switch to cancel the LDWS. The LDWS OFF indicator light turns on.

▼ Lane Departure Warning System (LDWS) Warning

If the system determines that there is the possibility of a lane departure, the LDWS warning beep activates and the LDWS warning light flashes. Operate the steering wheel appropriately and steer the vehicle to the center of the lane.
For vehicles equipped with the active driving display, if there is the possibility of a lane departure, the system indicates the direction it determines that the vehicle is deviating in the active driving display.
Indication on display

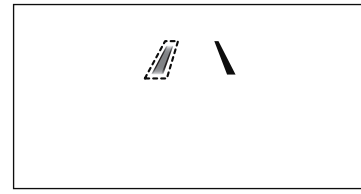

NOTE

- *If the LDWS warning sound is set to rumble*[1], the sound will be heard from the vehicle speaker on the side which the system determined the vehicle may be deviating from its lane.*

- *It may be difficult to hear the LDWS warning beep depending on the surrounding conditions such as outside noise.*
- *The volume of the LDWS warning sound can be changed.*
  Refer to Personalization Features on page 9-9.
- *The type of warning sound (rumble*1/ beep) on the LDWS can be changed.*
  Refer to Personalization Features on page 9-9.

*1 *A rumble strip is a series of grooves in the road pavement surface positioned at specific intervals, and when the vehicle passes over it a vibration and rumble sound is produced which alerts the driver that the vehicle is departing from the lane.*
The rumble sound is a reproduction of the sound which occurs when a vehicle passes over a rumble strip.

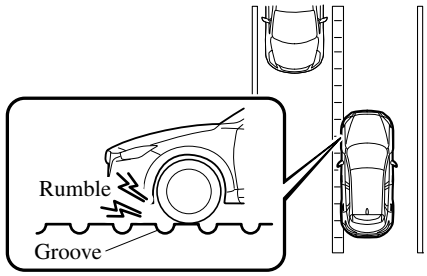

Blind Spot Monitoring (BSM)*

The BSM is designed to assist the driver in checking the area to the rear of the vehicle on both sides during lane changes by notifying the driver of the presence of vehicles approaching from the rear in an adjacent lane.
The BSM detects vehicles approaching from the rear while traveling in the forward direction at a speed of 10 km/h (6.3 mph) or faster and notifies the driver by turning on the BSM warning indicator light and displaying the vehicle detection screen (vehicles with active driving display).
If the turn signal lever is operated to signal a turn in the direction in which the BSM warning indicator light is illuminated while the approaching vehicle is detected, the BSM notifies the driver of possible danger by turning on the BSM warning indicator light, and by activating the warning sound and the warning screen indicator display (vehicles with active driving display).
The detection area on this system covers the driving lanes on both sides of the vehicle and from the rear part of the front doors to about 50 m (164 ft) behind the vehicle.

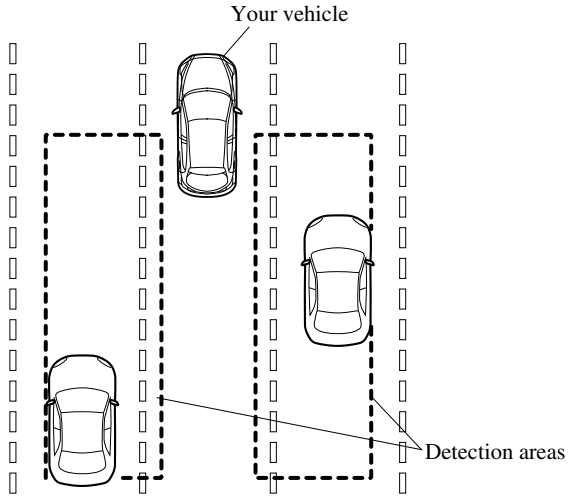

WARNING

Always check the surrounding area visually before making an actual lane change:
The system is only designed to assist you in checking for vehicles at your rear when making a lane change. Due to certain limitations with the operation of this system, the BSM warning indicator light, the warning sound and the warning screen indicator display may not activate or they might be delayed even though a vehicle is in an adjacent driving lane. Always make it your responsibility as a driver to check the rear.

 *Some models.

NOTE

- *The BSM will operate when all of the following conditions are met:*
  - *The ignition is switched ON.*
  - *The BSM OFF indicator light in the instrument cluster is turned off.*
  - *The vehicle speed is about 10 km/h (6.3 mph) or faster.*
- *The BSM will not operate under the following circumstances.*
  - *The vehicle speed falls below about 10 km/h (6.3 mph) even though the BSM OFF switch indicator light is turned off.*
  - *The shift lever (manual transaxle)/selector lever (automatic transaxle) is shifted to R position and the vehicle is reversing.*
  - *The turning radius is small (making a sharp turn, turning at intersections).*
- *In the following cases, the BSM OFF indicator light turns on and operation of the system is stopped. If the BSM OFF indicator light remains illuminated, have the vehicle inspected at an Authorized Mazda Dealer as soon as possible.*
  - *Some problem with the system including the BSM warning indicator lights is detected.*
  - *A large deviation in the installation position of a radar sensor (rear) on the vehicle has occurred.*
  - *There is a large accumulation of snow or ice on the rear bumper near a radar sensor (rear). Remove any snow, ice or mud on the rear bumper.*
  - *Driving on snow-covered roads for long periods.*
  - *The temperature near the radar sensors (rear) becomes extremely hot due to driving for long periods on slopes during the summer.*
  - *The battery voltage has decreased.*
- *Under the following conditions, the radar sensors (rear) cannot detect target objects or it may be difficult to detect them.*
  - *A vehicle is in the detection area at the rear in an adjacent driving lane but it does not approach. The BSM determines the condition based on radar detection data.*
  - *A vehicle is traveling alongside your vehicle at nearly the same speed for an extended period of time.*
  - *Vehicles approaching in the opposite direction.*
  - *A vehicle in an adjacent driving lane is attempting to pass your vehicle.*
  - *A vehicle is in an adjacent lane on a road with extremely wide driving lanes. The detection area of the radar sensors (rear) is set at the road width of expressways.*
- *In the following case, the flashing of the BSM warning indicator light, and the activation of the warning sound and the warning screen indicator display may not occur or they may be delayed.*
  - *A vehicle makes a lane change from a driving lane two lanes over to an adjacent lane.*
  - *Driving on steep slopes.*
  - *Crossing the summit of a hill or mountain pass.*

- *When there is a difference in the height between your driving lane and the adjacent lane.*
- *Directly after the BSM system becomes operable by changing the setting.*

- *If the road width is extremely narrow, vehicles two lanes over may be detected. The detection area of the radar sensors (rear) is set according to the road width of expressways.*
- *The BSM warning indicator light may turn on and the vehicle detection screen may be displayed in the display in reaction to stationary objects (guardrails, tunnels, sidewalls, and parked vehicles) on the road or the roadside.*

Objects such as guardrails and concrete walls running alongside the vehicle.

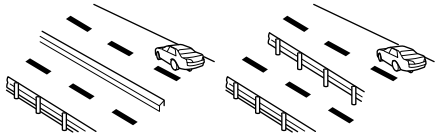

Places where the width between guardrails or walls on each side of the vehicle narrows.

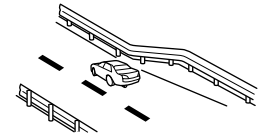

The walls at the entrance and exits of tunnels, turnouts.

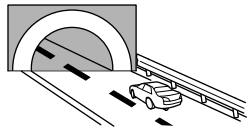

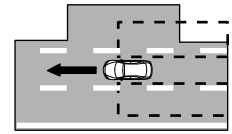

- *A BSM warning indicator light may flash or the warning beep and the warning screen indicator display may be activated several times when making a turn at a city intersection.*
- *Turn off the BSM while pulling a trailer or while an accessory such as a bicycle carrier is installed to the rear of the vehicle. Otherwise, the radar's radio waves will be blocked causing the system to not operate normally.*
- *In the following cases, it may be difficult to view the illumination/flashing of the BSM warning indicator lights equipped on the door mirrors.*
  - *Snow or ice is adhering to the door mirrors.*
  - *The front door glass is fogged or covered in snow, frost or dirt.*
- *The radar sensors (rear) of the BSM may be regulated under the radio wave related laws of the country where the vehicle is driven. The sensors in this system are approved for use in the U.S.A. (including territories), Canada, and Mexico. If a vehicle with a BSM is driven in a country other than the U.S.A., Canada, or Mexico, the system has to be turned off using the BSM OFF switch.*
- *The system switches to the Rear Cross Traffic Alert function when the shift lever (manual transaxle) or the selector lever (automatic transaxle) is shifted to the reverse (R) position. Refer to Rear Cross Traffic Alert (RCTA) on page 4-104.*

▼ Blind Spot Monitoring (BSM) Warning Indicator Lights/Blind Spot Monitoring (BSM) Warning Beep

The BSM or Rear Cross Traffic Alert (RCTA) system notifies the driver of the presence of vehicles in adjacent lanes or at the rear of the vehicle using the BSM warning indicator light, the warning sound and the display indicator (vehicles with active driving display) (BSM) while the systems are operational.

BSM warning indicator lights

The BSM warning indicator lights are equipped on the left and right door mirrors. The warning indicator lights turn on when a vehicle approaching from the rear in an adjacent lane is detected.

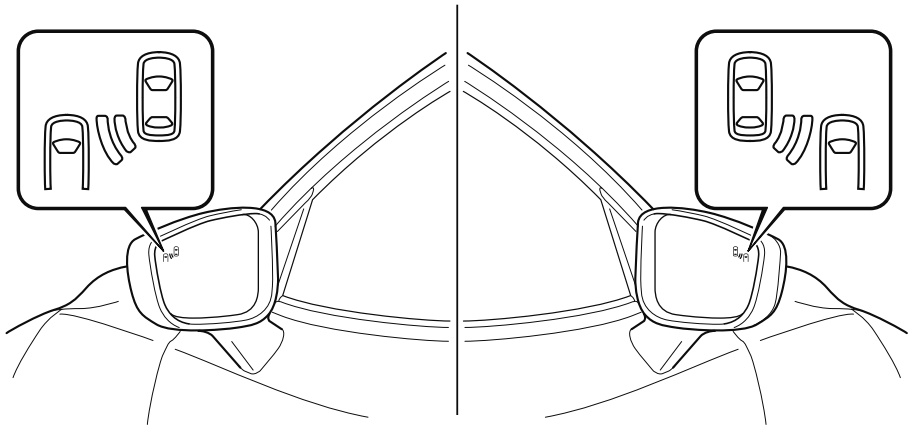

When the ignition is switched ON, the warning indicator light turns on momentarily and then turns off after a few seconds.

Forward driving (BSM operation)

The BSM detects vehicles approaching from the rear and turns on the BSM warning indicator lights equipped on the door mirrors according to the conditions. Additionally, while a BSM warning indicator light is illuminated, if the turn signal lever is operated to signal a turn in the direction in which the BSM warning indicator light is illuminated, the BSM warning indicator light flashes.

Reverse driving (Rear Cross Traffic Alert (RCTA) system operation)

The Rear Cross Traffic Alert (RCTA) system detects vehicles approaching from the left and right of your vehicle and flashes the BSM warning indicator lights.

Function for cancelling illumination dimmer

If the BSM warning indicator lights turn on when the parking lights are turned on, the brightness of the BSM warning indicator lights is dimmed.
If the BSM warning indicator lights are difficult to see due to glare from surrounding brightness when traveling on snow-covered roads or under foggy conditions, press the dimmer cancellation button to cancel the dimmer and increase the brightness of BSM warning indicator lights when they turn on.
Refer to Dashboard Illumination on page 4-17.

Display indicator (Vehicles with active driving display)

The detected approaching vehicle and warning are displayed in the active driving display when the vehicle is moving forward (BSM operational).

The detected direction is displayed with a detection indicator (white) when an approaching vehicle is detected. In addition, if the turn signal lever is operated to signal a lane change while the vehicle is detected, the display changes the color (amber) of the warning indicator.

BSM warning beep

The BSM warning beep is activated simultaneously with the flashing of a BSM warning indicator light.

▼ Canceling Operation of Blind Spot Monitoring (BSM)

The BSM and Rear Cross Traffic Alert (RCTA) systems are turned off and the BSM OFF indicator light in the instrument cluster turns on.

Vehicles with BSM OFF switch

When the BSM OFF switch is pressed, the BSM and Rear Cross Traffic Alert (RCTA) systems are turned off and the BSM OFF indicator light in the instrument cluster turns on.

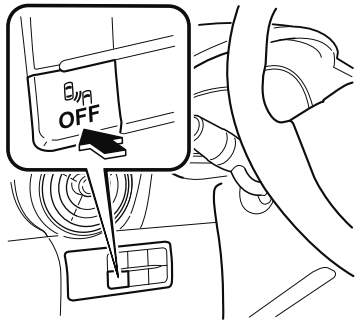

If the switch is pressed again, the BSM and Rear Cross Traffic Alert (RCTA) systems become operable and the BSM OFF indicator light turns off.

NOTE
When the ignition is switched OFF, the system status before it was turned off is maintained. For example, if the ignition is switched OFF while the BSM and Rear Cross Traffic Alert (RCTA) systems are operable, the BSM and Rear Cross Traffic Alert (RCTA) systems remain operable the next time the ignition is switched ON.

Vehicles without BSM OFF switch

The BSM system can be set to inoperable. Refer to Personalization Features on page 9-9.
When the BSM is set to inoperable, the BSM and Rear Cross Traffic Alert (RCTA) systems are turned off and the BSM OFF indicator light in the instrument cluster turns on.

NOTE
When the ignition is switched OFF, the system status before it was turned off is maintained. For example, if the ignition is switched OFF while the BSM and Rear Cross Traffic Alert (RCTA) systems are operational, the BSM and Rear Cross Traffic Alert (RCTA) systems remain operational the next time the ignition is switched ON.

Traffic Sign Recognition System (TSR)*

The TSR helps prevent the driver from overlooking traffic signs, and provides support for safer driving by displaying traffic signs on the active driving display which are recognized by the Forward Sensing Camera (FSC) or recorded in the navigation system while the vehicle is driven.
The TSR displays the speed limit, do not enter, and traffic stop signs.
If the vehicle speed exceeds the speed limit sign indicated in the active driving display while the vehicle is driven, the system notifies the driver using the indication in the active driving display and a warning sound.

NOTE

- *The TSR is not supported in some countries or regions. For information concerning the supported countries or regions, consult an Authorized Mazda Dealer.*
- *The TSR operates only if the navigation system SD card (Mazda genuine) is inserted in the SD card slot. Consult an Authorized Mazda Dealer for details.*

Speed limit signs and do not enter signs

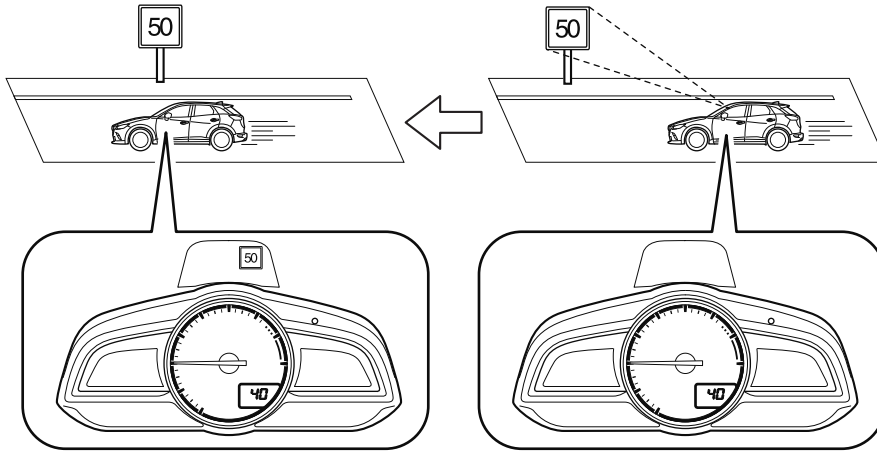

 *Some models.

Stop sign

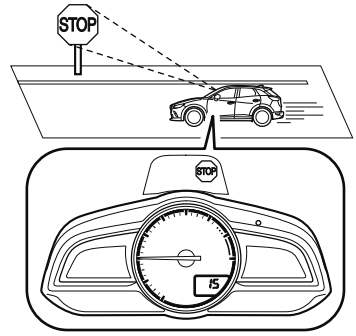

WARNING

Always check the traffic signs visually while driving.
The TSR helps prevent the driver from overlooking traffic signs and provides support for safer driving. Depending on the weather conditions or problems with traffic signs, a traffic sign may not be recognized or a traffic sign different from the actual traffic sign may be displayed. Always make it your responsibility as a driver to check the actual traffic signs. Otherwise, it could result in an accident.

NOTE

- *The TSR does not operate if there is a malfunction in the Forward Sensing Camera (FSC).*
- *Under the following conditions, the TSR may not operate normally.*
  - *An object placed on the dashboard is reflected in the windshield and picked up by the camera.*
  - *Heavy luggage is loaded in the luggage compartment or on the rear seat and the vehicle is tilted.*
  - *The tire pressures are not adjusted to the specified pressure.*
  - *Tires other than standard tires are equipped.*
  - *The vehicle is driven on the ramp and surrounding area to or from a rest area or a tollgate on a highway.*
  - *When surrounding brightness suddenly changes such as when entering or exiting a tunnel.*
  - *The illumination of the headlights is weakened because of dirt or the optical axis is deviated.*
  - *The windshield is dirty or foggy.*
  - *The windshield and camera are fogged (water droplets).*

- *Strong light is directed at the front of the vehicle (such as backlight or high-beam headlights of on-coming vehicles).*
- *The vehicle is making a sharp turn.*
- *Strong light reflects off the road.*
- *A traffic sign is in a position which makes it difficult to reflect the light from the vehicle's headlights, such as when the vehicle is driven at night or in a tunnel.*
- *The vehicle is driven under weather conditions such as rain, fog, or snow.*
- *The stored map data for the navigation system is not current.*
- *A traffic sign is obscured by mud or snow.*
- *A traffic sign is concealed by trees or a vehicle.*
- *A traffic sign is partially shaded.*
- *A traffic sign is bent or warped.*
- *A traffic sign is too low or too high.*
- *A traffic sign is too bright or too dark (including electronic traffic signs).*
- *A traffic sign is too big or too small.*
- *There is an object similar to the traffic sign being read (such as another traffic sign or other signs resembling it).*

- *The TSR does not operate if the active driving display is set to non-display.*
- *The TSR can be set to inoperable.*
  Refer to Personalization Features on page 9-9.

▼ Traffic Sign Display Indication

The following traffic signs are displayed on the active driving display.

Speed limit signs

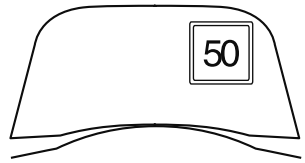

Do not enter signs

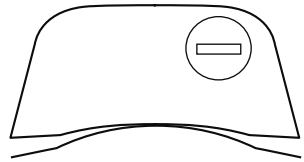

Stop signs

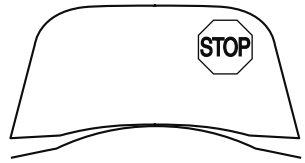

NOTE

Speed limit signs

- *When the vehicle speed is about 1 km/h (0.6 mph) or faster, the speed limit sign is displayed when any one of the following conditions are met.*
  - *The Forward Sensing Camera (FSC) recognizes a speed limit sign as a sign targeted for your vehicle and the vehicle passes it.*
  - *The speed limit sign stored in the navigation system is read (if the Forward Sensing Camera (FSC) does not recognize a speed limit sign).*
- *In the following cases, display of the speed limit sign stops.*
  - *The Forward Sensing Camera (FSC) recognizes the speed limit sign and the vehicle is driven for a certain distance after passing the sign.*
  - *Each sensor determines that the vehicle has changed direction of travel.*
  - *The Forward Sensing Camera (FSC) recognizes a new speed limit sign which differs from the previous one (displays the new speed limit sign).*
  - *The speed limit sign stored in the navigation system is not read within a certain period of time (if the Forward Sensing Camera (FSC) does not recognize a speed limit sign, the speed limit sign stored in the navigation system is displayed).*
  - *The vehicle speed exceeds the displayed speed limit sign by 30 km/h (19 mph) or more after a certain period of time has elapsed since the speed limit sign was displayed. (Except when there is information for the speed limit sign in the navigation system)*

Do not enter signs

- *A do not enter sign is displayed when all of the following conditions are met.*
  - *The vehicle speed is about 60 km/h (37 mph) or slower.*
  - *The Forward Sensing Camera (FSC) recognizes a do not enter sign as a sign targeted for your vehicle and the vehicle passes it.*
- *When the Forward Sensing Camera (FSC) recognizes the do not enter sign and a certain period of time has elapsed since the vehicle passed the sign, display of the do not enter sign stops.*

Stop sign

- *A stop sign is displayed when all of the following conditions are met:*
  - *The vehicle speed is about 30 km/h (19 mph) or slower.*
  - *The Forward Sensing Camera (FSC) recognizes a stop sign as a sign targeted for your vehicle.*
- *When a certain period of time has elapsed since the stop sign was displayed, display of the stop sign stops.*

▼ Excessive Speed Warning

If the vehicle speed exceeds the speed limit sign displayed in the active driving display, the area around the speed limit sign flashes three times in amber and the warning sound is activated three times at the same time. If the vehicle speed continues to exceed the displayed speed limit sign, the indication stops flashing and remains on. Check the surrounding conditions and adjust the vehicle speed to the legal speed using the appropriate operation such as depressing the brake pedal.

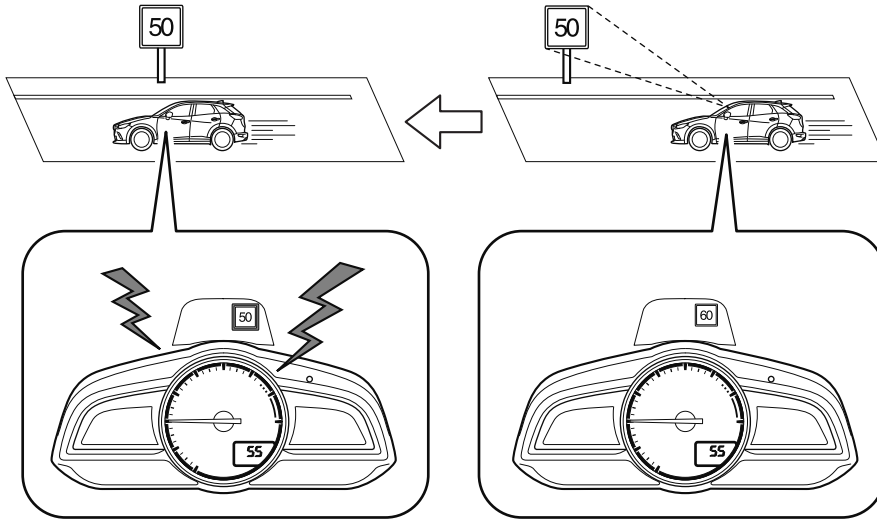

The excessive speed warning is initially set to inoperable. If you want to activate the excessive speed warning, change the setting in the personalization features. In addition, the warning pattern and the warning activation timing differ depending on the setting contents. Refer to Personalization Features on page 9-9.

Warning pattern

- Off: The excessive speed warning is not activated.
- Visual: The area around the speed limit sign displayed in the display flashes three times in amber, and if the vehicle speed continues to exceed the displayed speed limit sign, the indication stops flashing and remains on.
- Audio & Visual: The area around the speed limit sign displayed in the display flashes three times in amber and the warning sound is activated three times at the same time. If the vehicle speed continues to exceed the displayed speed limit sign, the indication stops flashing and remains on.

Warning activation timing

- + 0: If the vehicle speed exceeds the speed limit sign displayed in the display, the excessive speed warning is activated.
- + 5: If the vehicle speed exceeds the speed limit sign displayed in the display by 5 km/h (3 mph), the excessive speed warning is activated.
- + 10: If the vehicle speed exceeds the speed limit sign displayed in the display by 10 km/h (5 mph), the excessive speed warning is activated.

NOTE

- *In the following cases, the excessive speed warning stops operating.*
  - *The vehicle speed is less than the speed of the displayed speed limit sign. (If the activation timing for the excessive speed warning is changed in the personalization features, the excessive speed warning stops operating when the vehicle speed is less than the changed vehicle speed.*
  - *A speed limit sign indication has been updated and the vehicle speed is lower than the updated indication.*
  - *Display of the speed limit sign stops.*
- *The warning indication is displayed at the same time the excessive speed warning sound is activated if the vehicle speed exceeds the speed indicated on the speed limit sign. Refer to Warning Sound is Activated on page 7-43.*
- *If the Forward Sensing Camera (FSC) incorrectly recognizes the actual speed limit sign at a lower speed, the excessive speed alarm is activated even if the vehicle is driven at the legal speed.*

Distance Recognition Support System (DRSS)*

The DRSS measures the distance between your vehicle and a vehicle ahead using a radar sensor (front) while the vehicle speed is about 30 km/h (19 mph) or faster, and if your vehicle approaches a vehicle ahead more closely than what is appropriate for maintaining distance between the vehicles according to the vehicle speed, a notification in the active driving display is indicated to advise you to keep a safe distance from the vehicle ahead.

WARNING

Do not rely completely on the DRSS and always drive carefully:
The ability to detect a vehicle ahead is limited depending on the type of vehicle ahead, the weather conditions, and the traffic conditions. Therefore, if the accelerator and brake pedals are not operated correctly it could lead to an accident. Always verify the safety of the surrounding area and depress the brake pedal or accelerator pedal while keeping a safer distance from vehicles ahead or on-coming vehicles.

NOTE

- *The DRSS operates when all of the following conditions are met:*
  - *The ignition is switched ON.*
  - *The DRSS is on.*
  - *The selector lever is in a position other than reverse (R).*
  - *The vehicle speed is 30 km/h or faster (19 mph or faster).*
- *The objects which activate the system are 4-wheeled vehicles.*
- *The DRSS may also operate in the presence of motorcycles and bicycles.*
- *The DRSS may not operate normally under the following conditions:*
  - *The Dynamic Stability Control (DSC) has a malfunction.*
  - *The vehicle ahead is traveling at an extremely slow speed.*
- *The system does not operate with the following objects:*
  - *Vehicles approaching in the opposite direction.*
  - *Stationary objects (stopped vehicles, obstructions)*

 *Some models.

▼ Indication on Display

The DRSS operation status is indicated in the active driving display. Regarding malfunctions, check the vehicle conditions or have it inspected by an Authorized Mazda Dealer according to the content of the displayed message.
Refer to Warning/Indicator Lights on page 4-24.

NOTE

- *When the ignition is switched off, the operation status before the system was turned off is maintained. For example, if the ignition is switched off with the DRSS operable, the system will be operable when the ignition is switched ON the next time.*
- *The DRSS can be turned on/off and the system's sensitivity can be changed.*
  Refer to Personalization Features on page 9-9.

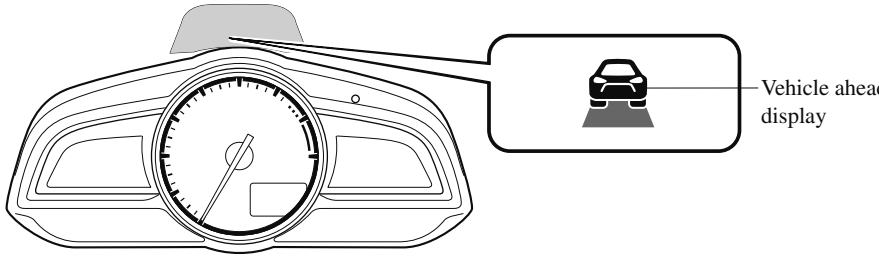

Distance-between-vehicles guidelines*1

Display	Distance between vehicles guide-lines (During travel at about 40 km/h (25 mph)	Distance between vehicles guide-lines (During travel at about 80 km/h (50 mph)
Illuminated in amber	About 10 m (32 ft) or less	About 20 m (65 ft) or less

*1 The distance between vehicles differs depending on vehicle speed.

Rear Cross Traffic Alert (RCTA)*

The RCTA system is designed to assist the driver in checking the area to the rear of the vehicle on both sides while the vehicle is reversing by alerting the driver to the presence of vehicles approaching the rear of the vehicle.
The RCTA system detects vehicles approaching from the rear left and right sides of the vehicle, and the rear of the vehicle while the vehicle is being reversed out of a parking space, and notifies the driver of possible danger using the Blind Spot Monitoring (BSM) warning indicator lights and the warning buzzer.

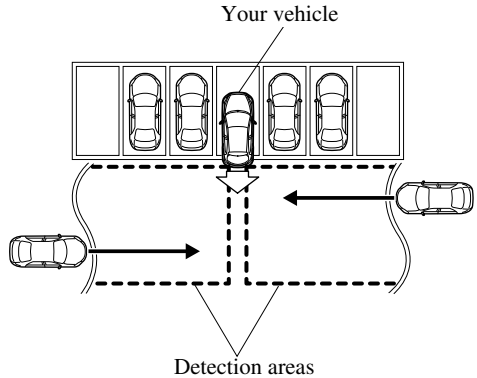

RCTA operation

1. The RCTA system operates when the shift lever (manual transaxle) or the selector lever (automatic transaxle) is shifted to the reverse (R) position.
2. If there is the possibility of a collision with an approaching vehicle, the Blind Spot Monitoring (BSM) warning indicator lights flashes and the warning beep is activated simultaneously.

 *Some models.

The RCTA warning indication in the rearview monitor also synchronizes with the Blind Spot Monitoring (BSM) warning indicator light on the door mirrors.

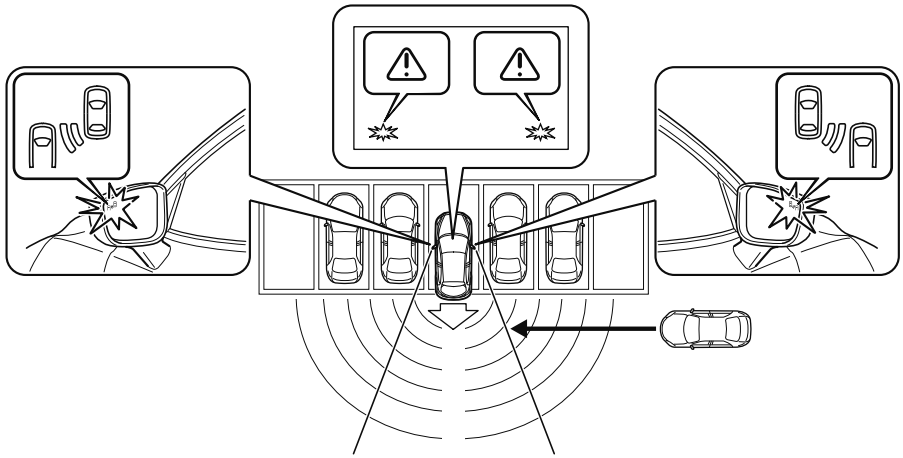

WARNING

Always check the surrounding area visually before actually putting the vehicle in reverse:
The system is only designed to assist you in checking for vehicles at the rear when putting the vehicle in reverse. Due to certain limitations with the operation of this system, the Blind Spot Monitoring (BSM) warning indicator lights may not flash or it might be delayed even though a vehicle is behind your vehicle. Always make it your responsibility as a driver to check the rear.

NOTE

- *In the following cases, the Blind Spot Monitoring (BSM) OFF Indicator Light turns on and operation of the system is stopped. If the Blind Spot Monitoring (BSM) OFF Indicator Light remains illuminated, have the vehicle inspected at an Authorized Mazda Dealer as soon as possible.*
  - *Some problem with the system including the Blind Spot Monitoring (BSM) warning indicator lights has occurred.*
  - *A large deviation in the installation position of a radar sensor (rear) on the vehicle has occurred.*
  - *There is a large accumulation of snow or ice on the rear bumper near a radar sensor (rear).*
  - *Driving on snow-covered roads for long periods.*
  - *The temperature near the radar sensors becomes extremely hot due to driving for long periods on slopes during the summer.*

- *The battery voltage has decreased.*

- *Under the following conditions, the radar sensors (rear) cannot detect target objects or it may be difficult to detect them.*
  - *The vehicle speed when reversing is about 10 km/h (6 mph) or faster.*
  - *The radar sensor (rear) detection area is obstructed by a nearby wall or parked vehicle. (Reverse the vehicle to a position where the radar sensor detection area is no longer obstructed.)*

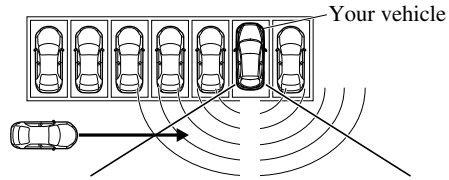

  - *A vehicle is approaching directly from the rear of your vehicle.*

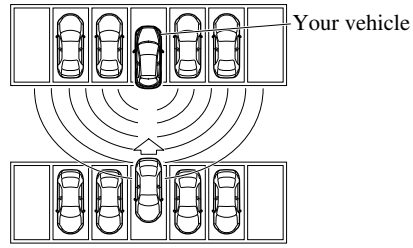

  - *The vehicle is parked on a slant.*

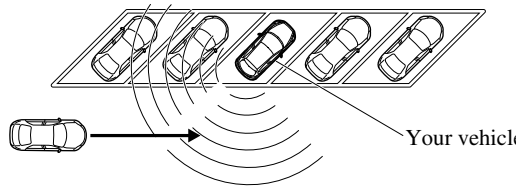

  - *Directly after the Blind Spot Monitoring (BSM) system becomes operable using the personalization feature.*
  - *Radio wave interference from a radar sensor equipped on a nearby parked vehicle.*

- *In the following cases, it may be difficult to view the illumination/flashing of the Blind Spot Monitoring (BSM) warning indicator lights equipped on the door mirrors.*
  - *Snow or ice adheres to the door mirrors.*
  - *The front door glass is fogged or covered in snow, frost or dirt.*

- *Turn off the RCTA system while pulling a trailer or while an accessory such as a bicycle carrier is installed to the rear of the vehicle. Otherwise, the radio waves emitted by the radar will be blocked causing the system to not operate normally.*

Mazda Radar Cruise Control with Stop & Go function (MRCC with Stop & Go function)*

The MRCC with Stop & Go function system is designed to maintain headway control*1 with a vehicle ahead according to your vehicle's speed using a radar sensor (front) to detect the distance to the vehicle ahead and a preset vehicle speed without you having to use the accelerator or brake pedals.

*1 Headway Control: Control of the distance between your vehicle and the vehicle ahead detected by the Mazda Radar Cruise Control (MRCC) system.

Additionally, if your vehicle starts closing in on the vehicle ahead such as if the vehicle ahead brakes suddenly, a warning sound and a warning indication in the display are activated simultaneously to alert you to maintain a sufficient distance between the vehicles.
If the vehicle ahead stops while you are following behind it, your vehicle will stop and be held stopped automatically (stop hold control), and headway control will resume when you resume driving the vehicle such as by pressing the RES switch.
Also refer to the following before using the MRCC with Stop & Go function.

・AUTOHOLD (page 4-61)
・Forward Sensing Camera (FSC) (page 4-130)
・Radar sensor (front) (page 4-135)

WARNING

Do not rely completely on the MRCC with Stop & Go function:
The MRCC with Stop & Go function system has detection limitations depending on the type of vehicle ahead and its conditions, the weather conditions, and the road conditions.
Additionally, the system may be unable to decelerate sufficiently to avoid hitting the vehicle ahead if the vehicle ahead applies the brakes suddenly or another vehicle cuts into the driving lane, which could result in an accident.
Always drive carefully and verify the surrounding conditions and depress the brake pedal or accelerator pedal while keeping a safer distance from vehicles ahead or on-coming vehicles.

Do not use the MRCC with Stop & Go function system in the following locations, using the MRCC with Stop & Go function system at the following locations may result in an unexpected accident:

- *General roads other than highways (Driving under these conditions using the MRCC with Stop & Go function system is not possible.)*
- *Roads with sharp curves and where vehicle traffic is heavy and there is insufficient space between vehicles.*

*Some models.

- *Roads where frequent and repetitive acceleration and deceleration occur (Driving under these conditions using the MRCC with Stop & Go function system is not possible).*
- *When entering and exiting interchanges, service areas, and parking areas of highways (If you exit a highway while headway control is in use, the vehicle ahead will no longer be tracked and your vehicle may accelerate to the set speed).*
- *Slippery roads such as ice or snow-bound roads (Tires could spin causing you to lose vehicle control, or the stop hold control may not operate.)*
- *Long, descending slopes (to maintain distance between vehicles, the system automatically and continuously applies the brakes which could result in the loss of brake power.)*
- *Slopes with a steep gradient (The vehicle ahead may not be detected correctly, your vehicle may slide while stopped by the stop hold control, and it may accelerate suddenly after it starts moving.)*

For safety purposes, switch the MRCC with Stop & Go function system off when it is not being used.

Do not get out of the vehicle while the stop hold control is operating:
Getting out of the vehicle while the stop hold control is operating is dangerous as the vehicle may move unexpectedly and result in an accident. Before getting out of the vehicle, switch the MRCC with Stop & Go function system off, shift the selector lever to the P position, and apply the parking brake.

⚠ CAUTION

If your vehicle is towed or you are towing something, switch the MRCC with Stop & Go function system off to prevent a mis-operation.

NOTE

- *The MRCC with Stop & Go function system does not detect the following as physical objects.*
  - *Vehicles approaching in the opposite direction*
  - *Pedestrians*
  - *Stationary objects (stopped vehicles, obstructions)*
  - *If a vehicle ahead is traveling at an extremely low speed, the system may not detect it correctly.*
- *During headway control travel, do not set the system for detection of two-wheeled vehicles such as motorcycles and bicycles.*
- *Do not use the MRCC with Stop & Go function system under conditions in which close proximity warnings are frequently activated.*

- *During headway control travel, the system accelerates and decelerates your vehicle in conjunction with the speed of the vehicle ahead. However, if it is necessary to accelerate for a lane change or if the vehicle ahead brakes suddenly causing you to close in on the vehicle rapidly, accelerate using the accelerator pedal or decelerate using the brake pedal depending on the conditions.*
- *While the MRCC with Stop & Go function system is in use, it does not cancel even if the selector lever is operated and any intended engine braking does not occur. If deceleration is required, lower the set speed or depress the brake pedal.*
- *The sound of the automatic brakes operating may be heard, however, it does not indicate a problem.*
- *The brake lights turn on while the MRCC with Stop & Go function automatic braking is operating, however, they may not turn on while the vehicle is on a downslope at the set vehicle speed or traveling at a constant speed and following a vehicle ahead.*

▼ Mazda Radar Cruise Control with Stop & Go function (MRCC with Stop & Go function) Display Indication

The MRCC with Stop & Go function setting status and operation conditions are indicated on the active driving display.

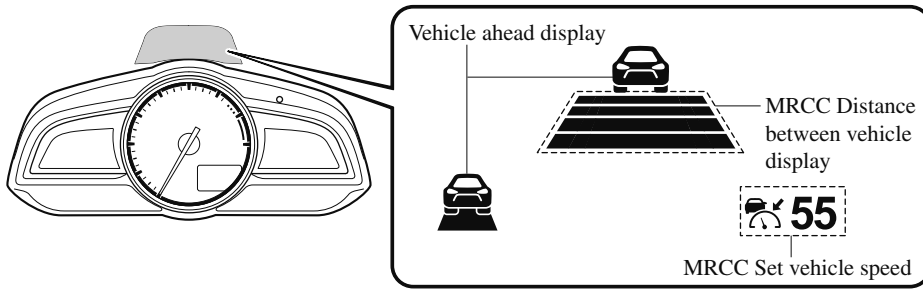

If there is a problem with the MRCC with Stop & Go function system, MRCC with Stop & Go function warning light (amber) turns on. Check the center display to verify the problem and then have your vehicle inspected by an Authorized Mazda Dealer.

▼ Close Proximity Warning

If your vehicle rapidly closes in on the vehicle ahead because the vehicle ahead applies the brakes suddenly while you are traveling in headway control, the warning sound activates and the brake warning is indicated in the display. Always verify the safety of the surrounding area and depress the brake pedal while keeping a safer distance from the vehicle ahead. Additionally, keep a safer distance from the vehicles behind you.

NOTE
In the following cases, the warnings and brakes may not operate even if your vehicle starts closing in on the vehicle ahead.

- *You are driving your vehicle at the same speed as the vehicle ahead.*
- *Directly after the MRCC with Stop & Go function system has been set.*
- *Directly after the accelerator pedal is released.*
- *Another vehicle cuts into the driving lane.*

▼ Setting the System

The MRCC with Stop & Go function system operates when all of the following conditions are met.

- Vehicle speed is 0 km/h (0 mph) to 145 km/h (90 mph)
- The MRCC with Stop & Go function is turned on.
- The brake pedal is not depressed.
- The electric parking brake (EPB) is released (electric parking brake (EPB) indicator light is turned off).
- There is no problem with the DSC.
- All the doors are closed.
- The driver's seat belt is fastened.
- The selector lever is in the drive (D) position or manual (M) position (manual mode).

NOTE

- *In the following cases, the MRCC with Stop & Go function system is canceled when the vehicle is traveling at 30 km/h (19 mph) or less and "MRCC Disabled under 30 km/h" is displayed in the active driving display.*
  - *The Forward Sensing Camera (FSC) cannot detect target objects (There is problem with the Forward Sensing Camera (FSC) or windshield is dirty).*
  - *There is a problem with the stop hold control function.*
  - *There is a problem with the electric parking brake (EPB).*
- *It may not be possible to set the MRCC with Stop & Go function system directly after starting the engine, while the DSC operation is being checked.*

Turning on the system

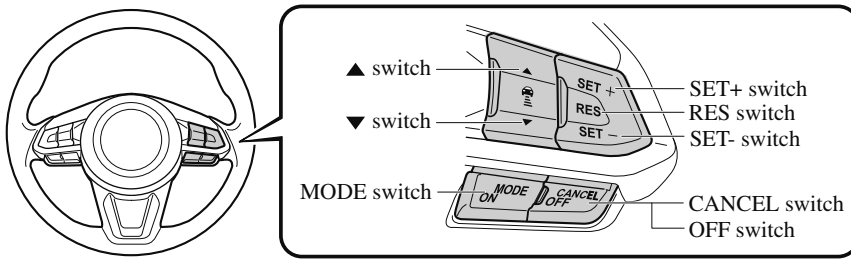

When the MODE switch is pressed once, the MRCC with Stop & Go function system turns on, and the MRCC with Stop & Go function main indication (white) turns on and the vehicle speed and the distance between the vehicles while in headway control can be set.

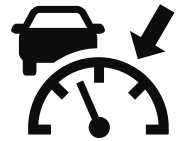

In addition, the MRCC with Stop & Go function system display indication is displayed on the active driving display at the same time.

NOTE

- *If the ignition is switched off while the MRCC with Stop & Go function system is operating, the system will be operable when the ignition is switched ON the next time.*
- *The MRCC with Stop & Go function can switch to the cruise control function. Refer to Cruise Control Function on page 4-116.*

How to set the speed

1. Adjust the vehicle speed to the desired setting using the accelerator pedal.
2. Headway control begins when the SET+ or SET− switch is pressed.
   The set speed and the inter-vehicle distance display filled with white lines is displayed. The MRCC with Stop & Go function main indication (white) switches to the MRCC with Stop & Go function set indication (green) at the same time.

Travel status	Display
During travel at constant speed	55
During travel under headway control	55

NOTE

- *If a vehicle ahead is detected while traveling at a constant speed, the vehicle-ahead indication is displayed and headway control is performed. Additionally, when a vehicle ahead is no longer detected, the vehicle-ahead indication turns off and the system switches back to travel at constant speed.*
- *The lowest possible speed which can be set on the MRCC with Stop & Go function system is 30 km/h (19 mph).*
- *Headway control is not possible if the vehicle ahead is driving faster than your vehicle's set speed. Adjust the system to the desired vehicle speed using the accelerator pedal.*

How to set the distance-between-vehicles during headway control

The distance-between-vehicles is set to a shorter distance by pressing the ▼ switch. The distance-between-vehicles is set to a longer distance by pressing the ▲ switch. The distance-between-vehicles can be set to 4 levels; Long, medium, short, and extremely short distance.

Distance-between-vehicles guideline (at 80 km/h (50 mph) vehicle speed)	Display
Long (about 50 m (164 ft))	
Medium (about 40 m (131 ft))	
Short (about 30 m (98 ft))	
Extremely short (about 25 m (82 ft))	

NOTE

- *The distance-between-vehicles differs depending on the vehicle speed, and the slower the vehicle speed, the shorter the distance.*
- *When the ignition is switched to ACC or OFF and then the engine is started again, the system automatically sets the distance-between-vehicles to the previous setting.*

How to change the set vehicle speed

To accelerate/decelerate using the SET switch

When you press the SET+ switch, the vehicle accelerates and when you press the SET− switch, it decelerates.

Short press	1 km/h (1 mph)
Long press	10 km/h (5 mph)

NOTE
For example, the set vehicle speed is changed by pressing the SET switch four times as follows:
The vehicle speed accelerates or decelerates by 4 km/h (4 mph).

To increase speed using accelerator pedal

Depress the accelerator pedal and press and release the SET+ switch or SET− switch at the desired speed. If the switch is not operated, the system returns to the set speed after you release your foot from the accelerator pedal.

⚠ CAUTION

The warnings and brake control do not operate while the accelerator pedal is depressed.

NOTE

- *The setting speed can be changed by operating the SET+ switch or SET− switch during stop hold control.*
- *When accelerating using the SET+ switch while in headway control, the set vehicle speed can be adjusted but acceleration is not possible. If there is no longer a vehicle ahead, acceleration continues until reaching the set vehicle speed. For the set vehicle speed, check the set vehicle speed indication in the display.*
- *While depressing the accelerator pedal, the color of the MRCC with Stop & Go function indication changes from green to white.*

Canceling the system

If any of the following operations is done, the MRCC with Stop & Go function cancels temporarily, the MRCC with Stop & Go function set indication (green) switches to the MRCC with Stop & Go function main indication (white), and the MRCC with Stop & Go function set indicator light (green) turns off at the same time.

- The OFF/CANCEL switch is pressed.
- The brake pedal is depressed.
- The electric parking brake (EPB) is applied.
- The selector lever is in the P (Park), N (Neutral), or R (Reverse) position.
- Any of the doors is opened.

- The driver's seat belt is unfastened.

Under the following conditions, the MRCC with Stop & Go function cancel indication is displayed in the active driving display and a single beep sound is heard.

- The DSC has operated.
- The Smart Brake Support (SBS) has operated.
- The Smart City Brake Support (SCBS) or Advanced Smart City Brake Support (Advanced SCBS) has operated.
- When traveling on a downslope for a long period of time.
- There is a problem with the system.
- The engine has stalled.
- The electric parking brake (EPB) is automatically applied during stop hold control.
- The radar sensor (front) cannot detect target objects (during rain, fog, snow or other inclement weather conditions, or when the radiator grille is dirty).

Resuming control

If the MRCC with Stop & Go function system is canceled, you can resume control at the previously set speed by pressing the RES switch and after all of the operation conditions have been met.

NOTE
If the set speed is not indicated in the display, the control does not resume even if the RES switch is pressed.

Turning off the system

Press the OFF/CANCEL switch two times while the MRCC with Stop & Go function system is operating to switch off the system.

▼ Stop Hold Control

While in headway control using the MRCC with Stop & Go function system, your vehicle will stop when a vehicle ahead stops. When the vehicle is stopped and the stop hold control operates, the MRCC with Stop & Go function indicator light turns on.

NOTE

- *If the MRCC with Stop & Go function system is canceled during stop hold control, the vehicle is held in its stopped position. The stop hold control can be canceled by performing one the following actions.*
  - *Press the accelerator pedal and resume driving the vehicle.*
  - *While forcefully depressing the brake, switch the MRCC with Stop & Go function system off.*
- *The parking brake is automatically applied and the vehicle is held in its stopped position when 10 minutes have elapsed since the stop hold control operated. At this time, the MRCC with Stop & Go function system is canceled.*
- *The brake lights turn on during stop hold control.*

To resume driving

After the vehicle ahead starts moving while your vehicle is stopped under stop hold control, press the RES switch or depress the accelerator pedal to cancel the stop hold control and resume driving.

NOTE

- *When you resume driving by pressing the RES switch, your vehicle does not start moving until the distance between your vehicle and the vehicle ahead lengthens to the specified distance or farther.*
- *If the MRCC with Stop & Go function is temporarily canceled during stop hold control, you cannot resume driving by pressing the RES switch when there are no vehicles in front of your vehicle. Depress the accelerator pedal and resume driving the vehicle.*
- *If the vehicle ahead starts moving within 3 seconds after your vehicle is stopped by the stop hold control, headway control will resume even if you do not resume driving your vehicle, such as by depressing the accelerator pedal.*

Resume driving information

If you do not resume driving within a few seconds after the vehicle ahead starts moving, the active driving display vehicle-ahead indication flashes to urge the driver to resume driving.

▼ Cruise Control Function

While this function is operating, the headway control operation is canceled and only the cruise control function operates. The vehicle speed can be set more than about 25 km/h (16 mph).
Use the cruise control function on expressways and other highways which do not require a lot of repeated acceleration and deceleration.

WARNING

Do not use the cruise control function in the following locations:
Otherwise, it could lead to an accident.

- *Roads with sharp curves and where vehicle traffic is heavy and there is insufficient space between vehicles. (Driving under these conditions using the cruise control function is not possible)*
- *Steep down slopes (Set speed may be exceeded because sufficient engine braking cannot be applied)*
- *Slippery roads such as ice or snow-bound roads (Tires could spin causing you to lose vehicle control)*

Always drive carefully:

The warnings and brake control will not operate after the headway control function is canceled and the system is switched to only the cruise control function. Depress the brake pedal to decelerate according to the surrounding conditions while keeping a safer distance from the vehicle ahead and always driving carefully.

Switching to cruise control function

When the MODE switch is pressed until the system switches to the cruise main indication (white) while the MRCC with Stop & Go function system is turned on, the system switches to the cruise control function.
When the system switches to the cruise control function, the indicator and active driving display notify the driver as follows:

- The MRCC with Stop & Go function set indication (green) or the MRCC with Stop & Go function main indication (white) is turned off, and the cruise main indication (white) is turned on.

WARNING

Always turn off the cruise control function when it is not in use:
Leaving the cruise control function turned on when it is not in use is dangerous as it could operate unexpectedly, resulting in an accident.

How to set the speed

Adjust the system to the desired vehicle speed using the accelerator pedal.
When the SET+ or SET− switch is pressed, the cruise set indication (green) is turned on and headway control begins.

NOTE

- *The system may not be able to maintain the set speed constantly depending on driving conditions such as steep up or down slopes.*
- *The speed will continue increasing while the SET+ switch is pressed and held. The speed will continue decreasing while the SET− switch is pressed and held.*

How to increase the set speed

The set speed can be increased using the following operations:

To increase speed using the SET+ switch

Press and hold the SET+ switch and release the switch at the desired speed.
The set speed can be adjusted incrementally (1 km/h (1 mph) increments) by pressing the switch and releasing it immediately. For example, if the switch is pressed 4 times, the set speed increases by about 4 km/h (4 mph).

To increase speed using accelerator pedal

Depress the accelerator pedal and press the SET+ or SET− switch at the desired speed.
If the switch is not operated, the system returns to the set speed after you release your foot from the accelerator pedal.

How to Decrease the Set Speed

Press the SET− switch continuously and release the switch at the desired speed. The set speed can be adjusted incrementally (1 km/h (1 mph) increments) by pressing the switch and releasing it immediately. For example, if the switch is pressed 4 times, the set vehicle speed decreases by about 4 km/h (4 mph).

Canceling the function

When the cruise control function is canceled and the RES switch is pressed while the vehicle speed is 25 km/h (16 mph) or faster, the speed returns to the original set speed.

Canceling using OFF/CANCEL switch

When the OFF/CANCEL switch is pressed once, the cruise control function is cancelled.

Automatically cancel

The cruise control function is canceled automatically in the following cases.

- The brake pedal is depressed.
- The parking brake is applied.
- The selector lever is shifted to P or N position.

NOTE

- *If the vehicle speed decreases by about 15 km/h (9.4 mph) or more than the set speed, the cruise control function may be canceled.*
- *When the vehicle speed is less than 21 km/h (13 mph), the cruise control function is canceled. In this case, the vehicle speed will not return to the original set speed even if the vehicle is accelerated to 25 km/h (16 mph) or higher and the RES switch is pressed. Reset the cruise control function.*

Advanced Smart City Brake Support (Advanced SCBS)*

The Advanced SCBS alerts the driver of a possible collision using the display and a warning sound when the Forward Sensing Camera (FSC) detects a vehicle ahead or pedestrian and determines that a collision with the object is unavoidable while the vehicle is driven at a vehicle speed of about 4 to 80 km/h (2 to 50 mph) if the object is a vehicle ahead and about 10 to 80 km/h (6.2 to 50 mph) if the object is a pedestrian. In addition, the system reduces damage in the event of a collision by operating the brake control (Advanced SCBS brake) when the system determines that a collision is unavoidable. In addition, when the driver depresses the brake pedal, the brakes are applied firmly and quickly to assist. (Brake Assist (Advanced SCBS brake assist))

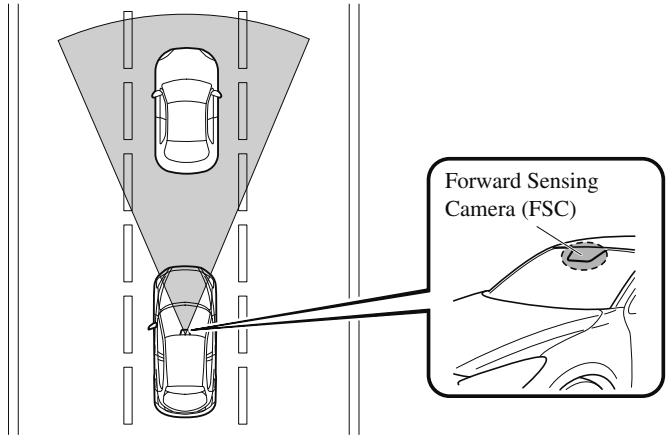

WARNING

Do not rely completely on the Advanced SCBS system:

- *The Advanced SCBS system is only designed to reduce damage in the event of a collision. Over reliance on the system leading to the accelerator pedal or brake pedal being mistakenly operated could result in an accident.*
- *The Advanced SCBS system operates in response to a vehicle ahead, a 2-wheeled vehicle, or a pedestrian. The system does not operate in response to obstructions such as a wall or animals.*

*Some models.

CAUTION

In the following cases, turn the system off to prevent a mis-operation:

- *The vehicle is being towed or when towing another vehicle.*
- *The vehicle is on a chassis roller.*
- *When driving on rough roads such as in areas of dense grass or off-road.*

Refer to Stopping the Advanced Smart City Brake Support (Advanced SCBS) System Operation on page 4-121 on how to turn off the Advanced SCBS system.

NOTE

- *The Advanced SCBS system will operate under the following conditions.*
  - *The engine is running.*
  - *The Smart City Brake Support (SCBS) warning light (amber) does not illuminate.*
  - ***(Object is vehicle ahead)***
    The vehicle speed is between about 4 to 80 km/h (2 to 50 mph).
  - ***(Object is a pedestrian)***
    The vehicle speed is between about 10 to 80 km/h (6.2 to 50 mph).
  - *The Advanced SCBS system is not turned off.*
- *Under the following conditions, the Advanced SCBS system may not operate normally:*
  - *The Advanced SCBS system will not operate if the driver is deliberately performing driving operations (accelerator pedal and steering wheel).*
  - *If there is the possibility of partial contact with a vehicle ahead.*
  - *The vehicle is driven on a slippery road surface such as wet roads or icy or snow-bound roads.*
  - *The braking performance is adversely affected due to cold temperatures or wet brakes.*
  - *The vehicle is driven at the same speed as the vehicle ahead.*
  - *The accelerator pedal is depressed.*
  - *The brake pedal is depressed.*
  - *The steering wheel is being operated.*
  - *The selector lever is being operated.*
- *In the following cases, the Advanced SCBS may operate.*
  - *Objects on the road at the entrance to a curve.*
  - *Vehicles passing in the opposite lane while making a curve.*
  - *When passing through a toll gate.*
  - *When passing through low gates, narrow gates, car washing machines, or tunnels.*
  - *If you suddenly come close to a vehicle ahead.*
  - *2-wheeled vehicles, animals, or standing trees.*
- ***(Manual transaxle)***
  If the vehicle is stopped by the SCBS operation and the clutch pedal is not depressed, the engine stops.

▼ Smart City Brake Support (SCBS) Indicator Light (Red)

If the Advanced SCBS is operating, the indicator light (red) flashes.

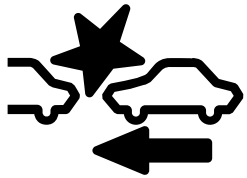

▼ Collision Warning

If there is the possibility of a collision with a vehicle ahead, the beep sounds continuously and a warning is indicated in the active driving display.

NOTE

- ***(Without SCBS OFF switch)***
  The operation distance and volume of the collision warning can be changed. Refer to Personalization Features on page 9-9.
- ***(With SCBS OFF switch)***
  The operation distance and volume of the collision warning can be changed. Consult an Authorized Mazda Dealer.

▼ Automatic Brake Operation Display

The automatic brake operation display is indicated on the active driving display after the Advanced SCBS is operated.

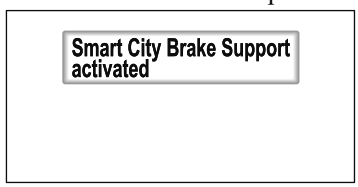

NOTE

- *The collision warning beep sounds intermittently while the Advanced SCBS brake or brake assist (Advanced SCBS brake assist) is operating.*
- *If the vehicle is stopped by the Advanced SCBS operation and the brake pedal is not depressed, the warning beep sounds one time after about 2 seconds and the Advanced SCBS brake is automatically released.*

▼ Stopping the Advanced Smart City Brake Support (Advanced SCBS) System Operation

The Advanced SCBS system can be temporarily deactivated.
When the Advanced SCBS system is turned off, the Smart City Brake Support (SCBS) OFF indicator light turns on.

When the engine is restarted, the system becomes operational.

Without SCBS OFF switch

Refer to Personalization Features on page 9-9.

NOTE
When the Advanced SCBS system is set to inoperable, the Smart Brake Support (SBS) are also set to inoperable.

With SCBS OFF switch

Press the SCBS OFF switch to turn off the system. The Smart City Brake Support (SCBS) OFF indicator light in the instrument cluster will illuminate.

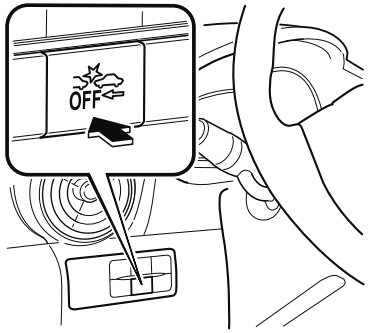

Press the switch again to turn the system back on. The Smart City Brake Support (SCBS) OFF indicator light will turn off.

Smart City Brake Support (SCBS)*

The SCBS system alerts the driver of a possible collision using an indication in the display and a warning sound when the Forward Sensing Camera (FSC) detects a vehicle ahead and determines that a collision with a vehicle ahead is unavoidable while the vehicle is being driven at a vehicle speed of about 4 to 80 km/h (2 to 50 mph). In addition, the system reduces damage in the event of a collision by operating the brake control (Smart City Brake Support (SCBS) brake) when the system determines that a collision is unavoidable while the vehicle is being driven at a vehicle speed of about 4 to 30 km/h (2 to 18 mph). It may also be possible to avoid a collision if the relative speed between your vehicle and the vehicle in front of you is less than about 20 km/h (12 mph). In addition, when the driver depresses the brake pedal while the system is in the operation range at about 4 to 30 km/h (2 to 18 mph), the brakes are applied firmly and quickly to assist. (Brake Assist (Smart City Brake Support (SCBS) brake assist))

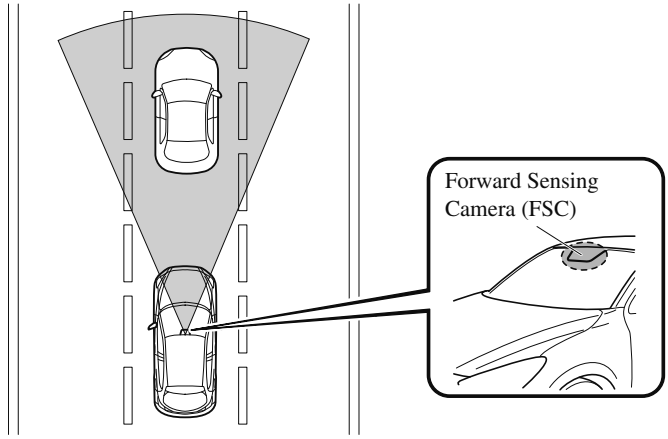

WARNING

Do not rely completely on the SCBS system:

- *The SCBS system is only designed to reduce damage in the event of a collision. Over reliance on the system leading to the accelerator pedal or brake pedal being mistakenly operated could result in an accident.*
- *The SCBS is a system which operates in response to a vehicle ahead. The system may not be able to detect or react to 2-wheeled vehicles or pedestrians.*

*Some models.

CAUTION

In the following cases, turn the system off to prevent a mis-operation:

- *The vehicle is being towed or when towing another vehicle.*
- *The vehicle is on a chassis roller.*
- *When driving on rough roads such as in areas of dense grass or off-road.*

Refer to Stopping the Smart City Brake Support (SCBS) system Operation on page 4-126 on how to turn off the SCBS system.

NOTE

- *The SCBS system will operate under the following conditions.*
  - *The engine is running.*
  - *The Smart Brake Support/Smart City Brake Support (SBS/SCBS) system warning light (amber) does not illuminate.*
  - ***(Rear-end collision warning)***
    The vehicle speed is about 4 to 80 km/h (2 to 50 mph).
  - ***(Brake control (Smart City Brake Support (SCBS) brake))***
    The vehicle speed is about 4 to 30 km/h (2 to 18 mph).
  - *The SCBS system is not turned off.*
- *Under the following conditions, the SCBS system may not operate normally:*
  - *The SCBS system will not operate if the driver is deliberately performing driving operations (accelerator pedal and steering wheel).*
  - *If there is the possibility of partial contact with a vehicle ahead.*
  - *The vehicle is driven on a slippery road surface such as wet roads or icy or snow-bound roads.*
  - *The braking performance is adversely affected due to cold temperatures or wet brakes.*
  - *The vehicle is driven at the same speed as the vehicle ahead.*
  - *The accelerator pedal is depressed.*
  - *The brake pedal is depressed.*
  - *The steering wheel is being operated.*
  - *The selector lever is being operated.*
- *In the following cases, the Forward Sensing Camera (FSC) determines that there is a vehicle ahead and the SCBS may operate.*
  - *Objects on the road at the entrance to a curve.*
  - *Vehicles passing in the opposite lane while making a curve.*
  - *Metal objects, bumps, or protruding objects on the road.*
  - *When passing through a toll gate.*
  - *When passing through low gates, narrow gates, car washing machines, or tunnels.*

- *If you suddenly come close to a vehicle ahead.*
- *2-wheeled vehicles, pedestrians, animals or standing trees.*
- *Vehicle is driven with some of the tires having significant wear.*

- ***(Manual transaxle)***
  If the vehicle is stopped by the Smart City Brake Support (SCBS) operation and the clutch pedal is not depressed, the engine stops.

▼ Smart City Brake Support (SCBS) Indicator Light (Red)

If the Smart City Brake Support (SCBS) is operating, the indicator light (red) flashes.

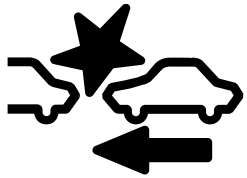

▼ Collision Warning

If there is the possibility of a collision with a vehicle ahead, the beep sounds continuously and a warning is indicated in the active driving display.

NOTE

- ***(Without SCBS OFF switch)***
  The operation distance and volume of the collision warning can be changed. Refer to Personalization Features on page 9-9.
- ***(With SCBS OFF switch)***
  The operation distance and volume of the collision warning can be changed. Consult an Authorized Mazda Dealer.

▼ Automatic Brake Operation Display

The automatic brake operation display is indicated on the active driving display after the SCBS is operated.

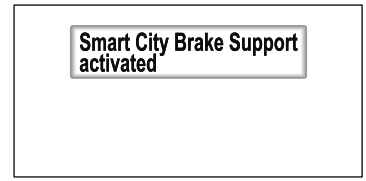

NOTE

- *The collision warning beep sounds intermittently while the SCBS brake or brake assist (SCBS brake assist) is operating.*
- *If the vehicle is stopped by the SCBS operation and the brake pedal is not depressed, the warning beep sounds one time after about 2 seconds and the SCBS brake is automatically released.*

▼ Stopping the Smart City Brake Support (SCBS) System Operation

The SCBS system can be temporarily deactivated.
When the SCBS system is turned off, the Smart City Brake Support (SCBS) OFF indicator light turns on.

When the engine is restarted, the system becomes operational.

Without SCBS OFF switch

Refer to Personalization Features on page 9-9.

NOTE
When the SCBS system is set to inoperable, the Smart Brake Support (SBS) are also set to inoperable.

With SCBS OFF switch

Press the SCBS OFF switch to turn off the system. The Smart City Brake Support (SCBS) OFF indicator light in the instrument cluster will illuminate.

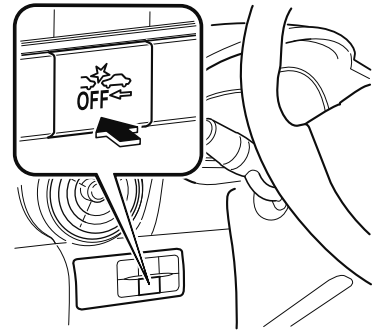

Press the switch again to turn the system back on. The Smart City Brake Support (SCBS) OFF indicator light will turn off.

Smart Brake Support (SBS)*

The SBS system alerts the driver of a possible collision using a display and warning sound if the radar sensor (front) and the Forward Sensing Camera (FSC) determine that there is the possibility of a collision with a vehicle ahead while the vehicle is being driven at about 15 km/h or faster (10 mph or faster). Furthermore, if the radar sensor (front) and the Forward Sensing Camera (FSC) determines that a collision is unavoidable, the automatic brake control is performed to reduce damage in the event of a collision.
In addition, when the driver depresses the brake pedal, the brakes are applied firmly and quickly to assist. (Brake Assist (SBS brake assist))

WARNING

Do not rely completely on the SBS system and always drive carefully:
The SBS is designed to reduce damage in the event of a collision, not avoid an accident. The ability to detect an obstruction is limited depending on the obstruction, weather conditions, or traffic conditions. Therefore, if the accelerator pedal or brake pedal is mistakenly operated it could result in an accident. Always verify the safety of the surrounding area and depress the brake pedal or accelerator pedal while keeping a safer distance from vehicles ahead or on-coming vehicles.

CAUTION

In the following cases, turn the system off to prevent a mis-operation:

- *The vehicle is being towed or when towing another vehicle.*
- *The vehicle is on a chassis roller.*
- *When driving on rough roads such as in areas of dense grass or off-road.*

NOTE

- *The SBS system operates when all of the following conditions are met:*
  - *The ignition is switched ON.*
  - *The SBS system is on.*
  - *The vehicle speed is about 15 km/h or faster (10 mph or faster).*
  - *The relative speed between your vehicle and the vehicle ahead is about 15 km/h or faster (10 mph or faster).*
  - *The Dynamic Stability Control (DSC) is not operating.*
- *The SBS system may not operate under the following conditions:*
  - *If the vehicle is accelerated rapidly and it comes close to a vehicle ahead.*

*Some models.

- *The vehicle is driven at the same speed as the vehicle ahead.*
- *The accelerator pedal is depressed.*
- *The brake pedal is depressed.*
- *The steering wheel is being operated.*
- *The selector lever is being operated.*
- *The turn signal is being used.*
- *When the vehicle ahead is not equipped with taillights or the taillights are turned off.*
- *When warnings and messages, such as a dirty windshield, related to the Forward Sensing Camera (FSC) are being displayed in the center display.*

- *Although the objects which activate the system are four-wheeled vehicles, the radar sensor (front) could detect the following objects, determine them to be an obstruction, and operate the SBS system.*
  - *Objects on the road at the entrance to a curve (including guardrails and snow banks).*
  - *A vehicle appears in the opposite lane while cornering or rounding a curve.*
  - *When crossing a narrow bridge.*
  - *When passing under a low gate or through a tunnel or narrow gate.*
  - *When entering an underground parking area.*
  - *Metal objects, bumps, or protruding objects on the road.*
  - *If you suddenly come close to a vehicle ahead.*
  - *When driving in areas where there is high grass or forage.*
  - *Two-wheeled vehicles such as motorbikes or bicycles.*
  - *Pedestrians or non-metallic objects such as standing trees.*
- *When the system operates, the user is notified by the active driving display.*
- *The SBS warning indication (amber) turns on when the system has a malfunction. Refer to Taking Action on page 7-34.*

▼ Smart Brake Support (SBS) Indicator Light (Red)

If the SBS is operating, the indicator light (red) flashes.

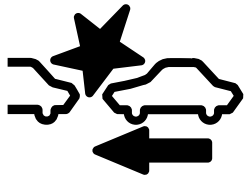

▼ Collision Warning

If there is the possibility of a collision with a vehicle ahead, the beep sounds continuously and a warning is indicated in the active driving display.

▼ Stopping The Smart Brake Support (SBS) System Operation

The SBS system can be temporarily deactivated.
Refer to Personalization Features on page 9-9.
When the SBS system is turned off, the SBS OFF indicator light turns on.

When the engine is restarted, the system becomes operational.

NOTE
If the SBS system operation is turned off, the Smart City Brake Support (SCBS) system operation is turned off simultaneously.

Forward Sensing Camera (FSC)*

Your vehicle is equipped with a Forward Sensing Camera (FSC). The Forward Sensing Camera (FSC) is positioned near the rearview mirror and used by the following systems.

- High Beam Control System (HBC)
- Lane Departure Warning System (LDWS)
- Traffic Sign Recognition System (TSR)
- Advanced Smart City Brake Support (Advanced SCBS)
- Smart City Brake Support (SCBS)
- Mazda Radar Cruise Control with Stop & Go function (MRCC with Stop & Go function)
- Smart Brake Support (SBS)

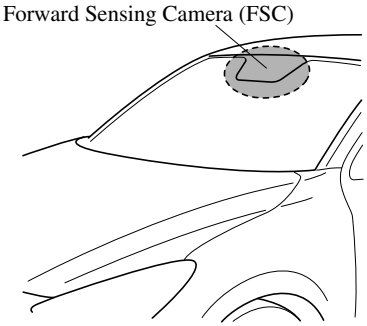

The Forward Sensing Camera (FSC) determines the conditions ahead of the vehicle while traveling at night and detects traffic lanes. The distance in which the Forward Sensing Camera (FSC) can detect objects varies depending on the surrounding conditions.

WARNING

Do not modify the suspension:
If the vehicle height or inclination is changed, the system will not be able to correctly detect vehicles ahead. This will result in the system not operating normally or mistakenly operating, which could cause a serious accident.

CAUTION

➢ *Do not apply accessories, stickers or film to the windshield near the Forward Sensing Camera (FSC).*
If the area in front of the Forward Sensing Camera (FSC) lens is obstructed, it will cause the system to not operate correctly. Consequently, each system may not operate normally which could lead to an unexpected accident.

 *Some models.

- *Do not disassemble or modify the Forward Sensing Camera (FSC).*
  Disassembly or modification of the Forward Sensing Camera (FSC) will cause a malfunction or mistaken operation. Consequently, each system may not operate normally which could lead to an unexpected accident.
- *Heed the following cautions to assure the correct operation of the Forward Sensing Camera (FSC).*
  - *Be careful not to scratch the Forward Sensing Camera (FSC) lens or allow it to get dirty.*
  - *Do not remove the Forward Sensing Camera (FSC) cover.*
  - *Do not place objects on the dashboard which reflect light.*
  - *Always keep the windshield glass around the camera clean by removing dirt or fogging. Use the windshield defroster to remove fogging on the windshield.*
  - *Consult an Authorized Mazda Dealer regarding cleaning the interior side of the windshield around the Forward Sensing Camera (FSC).*
  - *Consult an Authorized Mazda Dealer before performing repairs around the Forward Sensing Camera (FSC).*
  - *The Forward Sensing Camera (FSC) is installed to the windshield. Consult an Authorized Mazda Dealer for windshield repair and replacement.*
  - *When cleaning the windshield, do not allow glass cleaners or similar cleaning fluids to get on the Forward Sensing Camera (FSC) lens. In addition, do not touch the Forward Sensing Camera (FSC) lens.*
  - *When performing repairs around the rearview mirror, consult an Authorized Mazda Dealer.*
  - *Consult an Authorized Mazda Dealer regarding cleaning of the camera lens.*
  - *Do not hit or apply strong force to the Forward Sensing Camera (FSC) or the area around it. If the Forward Sensing Camera (FSC) is severely hit or if there are cracks or damage caused by flying gravel or debris in the area around it, stop using the following systems and consult an Authorized Mazda Dealer.*
    - *High Beam Control System (HBC)*
    - *Lane Departure Warning System (LDWS)*
    - *Traffic Sign Recognition System (TSR)*
    - *Advanced Smart City Brake Support (Advanced SCBS)*
    - *Smart City Brake Support (SCBS)*
    - *Mazda Radar Cruise Control with Stop & Go function (MRCC with Stop & Go function)*
    - *Smart Brake Support (SBS)*
  - *The direction in which the Forward Sensing Camera (FSC) is pointed has been finely adjusted. Do not change the installation position of the Forward Sensing Camera (FSC) or remove it. Otherwise, it could result in damage or malfunction.*
- *Always use tires for all wheels that are of the specified size, and the same manufacturer, brand, and tread pattern. In addition, do not use tires with significantly different wear patterns on the same vehicle as the system may not operate normally.*

➢ *The Forward Sensing Camera (FSC) includes a function for detecting a soiled windshield and informing the driver, however, depending on the conditions, it may not detect plastic shopping bags, ice or snow on the windshield. In such cases, the system cannot accurately determine a vehicle ahead and may not be able to operate normally. Always drive carefully and pay attention to the road ahead.*

NOTE

- *In the following cases, the Forward Sensing Camera (FSC) cannot detect target objects correctly, and each system may be unable to operate normally.*
  - *The height of the vehicle ahead is low.*
  - *You drive your vehicle at the same speed as the vehicle ahead.*
  - *Headlights are not turned on during the night or when going through a tunnel.*
- *In the following cases, the Forward Sensing Camera (FSC) may not be able to detect target objects correctly.*
  - *Under bad weather condition, such as rain, fog and snow.*
  - *The window washer is being used or the windshield wipers are not used when it's raining.*
  - *Ice, fog, snow, frost, rainfall, dirt, or foreign matter such as a plastic bag is stuck on the windshield.*
  - *Trucks with low loading platforms and vehicles with an extremely low or high profile.*
  - *When driving next to walls with no patterning (including fences and longitudinally striped walls).*
  - *The taillights of the vehicle ahead are turned off.*
  - *A vehicle is outside the illumination range of the headlights.*
  - *The vehicle is making a sharp turn, or ascending or descending a steep slope.*
  - *Entering or exiting a tunnel.*
  - *Heavy luggage is loaded causing the vehicle to tilt.*
  - *Strong light is shone at the front of the vehicle (back light or high-beam light from on-coming vehicles).*
  - *There are many light emitters on the vehicle ahead.*
  - *When the vehicle ahead is not equipped with taillights or the taillights are turned off at nighttime.*
  - *Elongated luggage or cargo is loaded onto installed roof rails and covers the Forward Sensing Camera (FSC).*
  - *Exhaust gas from the vehicle in front, sand, snow, and water vapor rising from manholes and grating, and water splashed into the air.*
  - *When towing a malfunctioning vehicle.*
  - *The vehicle is driven with tires having significantly different wear.*
  - *The vehicle is driven on down slopes or bumpy roads.*
  - *There are water puddles on the road.*

- *The surroundings are dark such as during the night, early evening, or early morning, or in a tunnel or indoor parking lot.*
- *The illumination brightness of the headlights is reduced or the headlight illumination is weakened due to dirt or a deviated optical axis.*
- *The target object enters the blind spot of the Forward Sensing Camera (FSC).*
- *A person or object bursts onto the road from the shoulder or cuts right in front of you.*
- *You change lanes and approach a vehicle ahead.*
- *When driving extremely close to the target object.*
- *Tire chains or a temporary spare tire is installed.*
- *The vehicle ahead has a special shape. For example, a vehicle towing a trailer house or a boat, or a vehicle carrier carrying a vehicle with its front pointed rearward.*

- *If the Forward Sensing Camera (FSC) cannot operate normally due to backlight or fog, the system functions related to the Forward Sensing Camera (FSC) are temporarily stopped and the following warning lights turn on. However, this does not indicate a malfunction.*
  - *High Beam Control System (HBC) warning light (amber)*
  - *Lane Departure Warning System (LDWS) warning light*
  - *Mazda Radar Cruise Control with Stop & Go function (MRCC with Stop & Go function) warning light*
  - *Smart Brake Support/Smart City Brake Support (SBS/SCBS) warning light (amber)*
- *If the Forward Sensing Camera (FSC) cannot operate normally due to high temperatures, the system functions related to the Forward Sensing Camera (FSC) are temporarily stopped and the following warning lights turn on. However, this does not indicate a malfunction. Cool down the area around the Forward Sensing Camera (FSC) such as by turning on the air conditioner.*
  - *High Beam Control System (HBC) warning light (amber)*
  - *Lane Departure Warning System (LDWS) warning light*
  - *Mazda Radar Cruise Control with Stop & Go function (MRCC with Stop & Go function) warning light*
  - *Smart Brake Support/Smart City Brake Support (SBS/SCBS) warning light (amber)*
- *If the Forward Sensing Camera (FSC) detects that the windshield is dirty or foggy, the system functions related to the Forward Sensing Camera (FSC) are temporarily stopped and the following warning lights turn on. However, this does not indicate a problem. Remove the dirt from the windshield or press the defroster switch and defog the windshield.*
  - *High Beam Control System (HBC) warning light (amber)*
  - *Lane Departure Warning System (LDWS) warning light*

- *Mazda Radar Cruise Control with Stop & Go function (MRCC with Stop & Go function) warning light*
- *Smart Brake Support/Smart City Brake Support (SBS/SCBS) warning light (amber)*

- *If there are recognizable cracks or damage caused by flying gravel or debris on the windshield, always have the windshield replaced. Consult an Authorized Mazda Dealer for replacement.*
- ***(With Advanced Smart City Brake Support (Advanced SCBS))***
  - *The Forward Sensing Camera (FSC) recognizes pedestrians when all of the following conditions are met:*
    - *The height of a pedestrian is about 1 to 2 meters.*
    - *An outline such as the head, both shoulders, or the legs can be determined.*
  - *In the following cases, the Forward Sensing Camera (FSC) may not be able to detect target objects correctly:*
    - *Multiple pedestrians are walking, or there are groups of people.*
    - *A pedestrian is close to a separate object.*
    - *A pedestrian is crouching, lying, or slouching.*
    - *A pedestrian suddenly jumps into the road right in front of the vehicle.*
    - *A pedestrian opens an umbrella, or is carrying large baggage or articles.*
    - *A pedestrian is in a dark location such as during the night, or blends into the background by wearing clothes matching the background color.*

Radar Sensor (Front)*

Your vehicle is equipped with a radar sensor (front).
The following systems also use the radar sensor (front).

- Distance Recognition Support System (DRSS)
- Mazda Radar Cruise Control with Stop & Go function (MRCC with Stop & Go function)
- Smart Brake Support (SBS)

The radar sensor (front) functions by detecting the radio waves reflected off a vehicle ahead or an obstruction sent from the radar sensor.
The radar sensor (front) is mounted behind the front emblem.

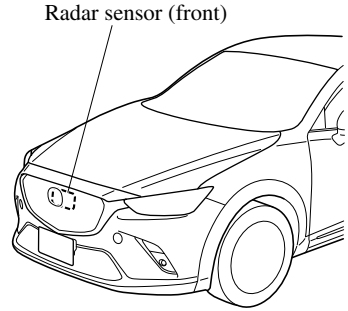

If the Smart Brake Support/Smart City Brake Support (SBS/SCBS) Warning Light (amber) is illuminated, the area around the radar sensor may be dirty. Refer to “Warning Guidance” in the center display (Type B audio).
Refer to If a Warning Light Turns On or Flashes on page 7-27.

CAUTION

Heed the following precautions to assure correct operation of each system.

- *Do not adhere stickers (including transparent stickers) to the surface of the radiator grille and front emblem in and around the radar sensor (front), and do not replace the radiator grille and front emblem with any product that is not a genuine product designed for use with the radar sensor (front).*
- *The radar sensor (front) includes a function for detecting soiling of the radar sensor's front surface and informing the driver, however, depending on the conditions, it may require time to detect or it may not detect plastic shopping bags, ice or snow. If this occurs, the system may not operate correctly, therefore always keep the radar sensor (front) clean.*
- *Do not install a grille guard.*
- *If the front part of the vehicle has been damaged in a vehicle accident, the position of the radar sensor (front) may have moved. Stop the system immediately and always have the vehicle inspected at an Authorized Mazda Dealer.*

*Some models.

- *Do not use the front bumper to push other vehicles or obstructions such as when pulling out of a parking space. Otherwise, the radar sensor (front) could be hit and its position deviated.*
- *Do not remove, disassemble, or modify the radar sensor (front).*
- *For repairs, replacement or paint work around the radar sensor (front), consult an Authorized Mazda Dealer.*
- *Do not modify the suspension. If the suspension are modified, the vehicle's posture could change and the radar sensor (front) may not be able to correctly detect a vehicle ahead or an obstruction.*

NOTE

- *Under the following conditions, the radar sensor (front) may not be able to detect vehicles ahead or obstructions correctly and each system may not operate normally.*
  - *The rear surface of a vehicle ahead does not reflect radio waves effectively, such as an unloaded trailer or an automobile with a loading platform covered by a soft top, vehicles with a hard plastic tailgate, and round-shaped vehicles.*
  - *Vehicles ahead with low vehicle height and thus less area for reflecting radio waves.*
  - *Visibility is reduced due to a vehicle ahead casting off water, snow, or sand from its tires and onto your windshield.*
  - *The luggage compartment is loaded with heavy objects or the rear passenger seats are occupied.*
  - *Ice, snow, or soiling is on the front surface of the front emblem.*
  - *During inclement weather such as rain, snow, or sand storms.*
  - *When driving near facilities or objects emitting strong radio waves.*
- *Under the following conditions, the radar sensor (front) may not be able to detect vehicles ahead or obstructions.*
  - *The beginning and end of a curve.*
  - *Roads with continuous curves.*
  - *Narrow lane roads due to road construction or lane closures.*
  - *The vehicle ahead enters the radar sensor's blind spot.*
  - *The vehicle ahead is running abnormally due to accident or vehicle damage.*
  - *Roads with repeated up and down slopes*
  - *Driving on poor roads or unpaved roads.*
  - *The distance between your vehicle and the vehicle ahead is extremely short.*
  - *A vehicle suddenly comes close such as by cutting into the lane.*
- *To prevent incorrect operation of the system, use tires of the same specified size, manufacturer, brand, and tread pattern on all four wheels. In addition, do not use tires with significantly different wear patterns or tire pressures on the same vehicle (Including the temporary spare tire).*
- *If the battery power is weak, the system may not operate correctly.*

- *If the vehicle is driven on a road with little traffic and few vehicles ahead or obstructions for the radar sensor (front) to detect, the sensor detects that the radar sensor (front) is dirty and the Smart Brake Support/Smart City Brake Support (SBS/SCBS) Warning Light (amber) may be temporarily turned on. However, it does not indicate a malfunction.*
- *The radar sensors are regulated by the relevant radio wave laws of the country in which the vehicle is driven. If the vehicle is driven abroad, authorization from the country in which the vehicle is driven may be required.*

Radar Sensors (Rear)*

Your vehicle is equipped with radar sensors (rear). The following systems also use the radar sensors (rear).

- Blind Spot Monitoring (BSM)
- Rear Cross Traffic Alert (RCTA)

The radar sensors (rear) function by detecting the radio waves reflected off a vehicle approaching from the rear or an obstruction sent from the radar sensor.

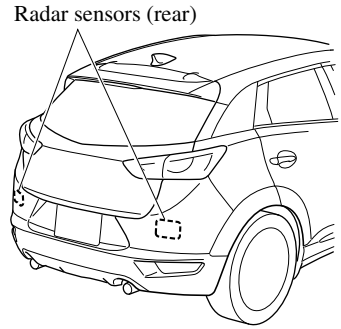

The radar sensors (rear) are installed inside the rear bumper, one each on the left and right sides.
Always keep the surface of the rear bumper near the radar sensors (rear) clean so that the radar sensors (rear) operate normally. Also, do not apply items such as stickers.
Refer to Exterior Care on page 6-54.

CAUTION

If the rear bumper receives a severe impact, the system may no longer operate normally. Stop the system immediately and have the vehicle inspected at an Authorized Mazda Dealer.

NOTE

- *The detection ability of the radar sensors (rear) has limitations. In the following cases, the detection ability may lower and the system may not operate normally.*
  - *The rear bumper near the radar sensors (rear) has become deformed.*
  - *Snow, ice or mud adheres to the radar sensors (rear) on the rear bumper.*
  - *Under bad weather conditions such as rain, snow and fog.*
- *Under the following conditions, the radar sensors (rear) cannot detect target objects or it may be difficult to detect them.*
  - *Stationary objects on a road or a road side such as small, two-wheeled vehicles, bicycles, pedestrians, animals, and shopping carts.*

 *Some models.

- *Vehicle shapes which do not reflect radar waves well such as empty trailers with a low vehicle height and sports cars.*
- *Vehicles are shipped with the direction of the radar sensors (rear) adjusted for each vehicle to a loaded vehicle condition so that the radar sensors (rear) detect approaching vehicles correctly. If the direction of the radar sensors (rear) has deviated for some reason, have the vehicle inspected at an Authorized Mazda Dealer.*
- *For repairs or replacement of the radar sensors (rear), or bumper repairs, paintwork, and replacement near the radar sensors, consult an Authorized Mazda Dealer.*
- *Turn off the system while pulling a trailer or while an accessory such as a bicycle carrier is installed to the rear of the vehicle. Otherwise, the radio waves emitted by the radar will be blocked causing the system to not operate normally.*
- *The radar sensors are regulated by the relevant radio wave laws of the country in which the vehicle is driven. If the vehicle is driven abroad, authorization from the country in which the vehicle is driven may be required.*

Cruise Control*

With cruise control, you can set and automatically maintain any speed of more than about 25 km/h (16 mph).

WARNING

Do not use the cruise control under the following conditions:
Using the cruise control under the following conditions is dangerous and could result in loss of vehicle control.

- *Hilly terrain*
- *Steep inclines*
- *Heavy or unsteady traffic*
- *Slippery or winding roads*
- *Similar restrictions that require inconsistent speed*

▼ Cruise Control Switch

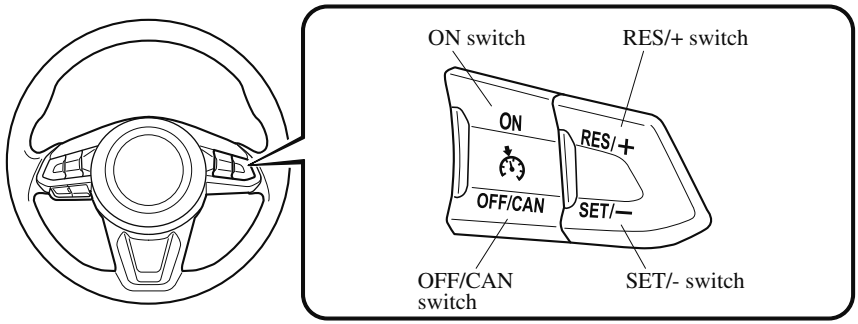

NOTE
If your Mazda has the following steering switch, your Mazda is equipped with the Mazda Radar Cruise Control with Stop & Go function (MRCC with Stop & Go function) system.

 *Some models.

Refer to Mazda Radar Cruise Control with Stop & Go function (MRCC with Stop & Go function) on page 4-107.

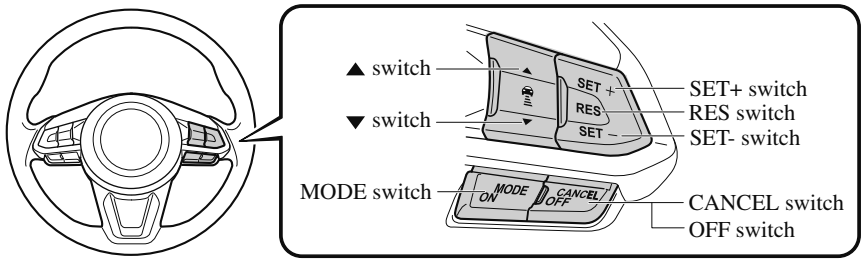

▼ Cruise main indication (white), Cruise Set Indication (White)/ Indicator Light (Green)

Cruise main indication (white)

The cruise main indication (white) is displayed in the instrument cluster when the cruise control system is activated.

Cruise set indication (white)/indicator light (green)

The cruise set indication (white) is displayed in the instrument cluster and the cruise set indicator light (green) turns on when a cruising speed has been set.

▼ Activation/Deactivation

To activate the system, press the ON switch. The cruise main indication (white) is displayed.
To deactivate the system, press the OFF/CAN switch.
The cruise main indication (white) turns off.

⚠ WARNING

Always turn off the cruise control system when it is not in use:
Leaving the cruise control system in an activation-ready state while the cruise control is not in use is dangerous as the cruise control could unexpectedly activate if the activation button is accidentally pressed, and result in loss of vehicle control and an accident.

NOTE
When the ignition is switched OFF, the system status before it was turned off is maintained. For example, if the ignition is switched OFF with the cruise control system operable, the system will be operable when the ignition is switched ON the next time.

▼ To Set Speed

1. Activate the cruise control system by pressing the ON switch. The cruise main indication (white) is displayed.
2. Accelerate to the desired speed, which must be more than 25 km/h (16 mph).
3. Set the cruise control by pressing the SET/− switch at the desired speed. The cruise control is set at the moment the SET/− switch is pressed. Release the accelerator pedal simultaneously. The cruise set indication (white) is displayed and the cruise set indicator light (green) turns on.

NOTE

- *The cruise control speed setting cannot be performed under the following conditions:*
  - ***(Automatic transaxle)***
    The selector lever is in the P or N position.
  - ***(Manual transaxle)***
    The shift lever is in the neutral position.
  - *The parking brake is applied.*
- *Release the SET/− or RES/+ switch at the desired speed, otherwise the speed will continue increasing while the RES/+ switch is pressed and held, and continue decreasing while the SET/− switch is pressed and held (except when the accelerator pedal is depressed).*
- *On a steep grade, the vehicle may momentarily slow down while ascending, or speed up while descending.*
- *The cruise control will cancel if the vehicle speed decreases below 21 km/h (13 mph) when climbing a steep grade.*
- *The cruise control may cancel at about 15 km/h (9 mph) below the preset speed such as when climbing a long, steep grade.*

▼ To Increase Cruising Speed

Follow either of these procedures.

To increase speed using cruise control switch

Press the RES/+ switch and hold it. Your vehicle will accelerate. Release the switch at the desired speed.

Press the RES/+ switch and release it immediately to adjust the preset speed. Multiple operations will increase the preset speed according to the number of times it is operated.

Increasing speed with a single RES/+ switch operation

Instrument cluster display for vehicle speed indicated in km/h: 1 km/h (0.6 mph)
Instrument cluster display for vehicle speed indicated in mph: 1 mph (1.6 km/h)

To increase speed using accelerator pedal

Depress the accelerator pedal to accelerate to the desired speed. Press the SET/− switch and release it immediately.

NOTE
Accelerate if you want to speed up temporarily when the cruise control is on. Greater speed will not interfere with or change the set speed. Take your foot off the accelerator to return to the set speed.

▼ To Decrease Cruising Speed

Press the SET/− switch and hold it. The vehicle will gradually slow.
Release the switch at the desired speed.

Press the SET/− switch and release it immediately to adjust the preset speed. Multiple operations will decrease the preset speed according to the number of times it is operated.

Decreasing speed with a single SET/− switch operation

Instrument cluster display for vehicle speed indicated in km/h: 1 km/h (0.6 mph)
Instrument cluster display for vehicle speed indicated in mph: 1 mph (1.6 km/h)

▼ To Resume Cruising Speed at More Than 25 km/h (16 mph)

If the cruise control system temporarily canceled (such as applying the brake pedal) and the system is still activated, the most recent set speed will automatically resume when the RES/+ switch is pressed.
If vehicle speed is below 25 km/h (16 mph), increase the vehicle speed up to 25 km/h (16 mph) or more and press the RES/+ switch.

▼ To Temporarily Cancel

To temporarily cancel the system, use one of these methods:

- Slightly depress the brake pedal.
- **(Manual transaxle)**
  Depress the clutch pedal.
- Press the OFF/CAN switch.

If the RES/+ switch is pressed when the vehicle speed is 25 km/h (16 mph) or higher, the system reverts to the previously set speed.

NOTE

- *If any of the following conditions occur, the cruise control system is temporarily canceled.*
  - *The parking brake is applied.*
  - ***(Automatic transaxle)***
    The selector lever is in the P or N position.
  - ***(Manual transaxle)***
    The shift lever is in the neutral position.
- *When the cruise control system is temporarily canceled by even one of the applicable cancel conditions, the speed cannot be re-set.*
- ***(Automatic transaxle)***
  The cruise control cannot be cancelled while driving in manual mode (selector lever shifted from D to M position). Therefore, engine braking will not be applied even if the transaxle is shifted down to a lower gear. If deceleration is required, lower the set speed or depress the brake pedal.

▼ To Deactivate

When a cruising speed has been set (cruise set indication (white) is displayed/cruise set indicator light (green) turns on)

Long-press the OFF/CAN switch or press the OFF/CAN switch 2 times.

When a cruising speed has not been set (cruise main indication (white) is displayed)

Press the OFF/CAN switch.

Tire Pressure Monitoring System*

The Tire Pressure Monitoring System (TPMS) monitors the pressure for each tire.
If tire pressure is too low in one or more tires, the system will inform the driver via the warning light in the instrument cluster and by the warning beep sound.
Refer to Contact Authorized Mazda Dealer and Have Vehicle Inspected on page 7-30.
Refer to Taking Action on page 7-34.
Refer to Tire Inflation Pressure Warning Beep on page 7-46.

The tire pressure sensors installed on each wheel send tire pressure data by radio signal to the receiver unit in the vehicle.

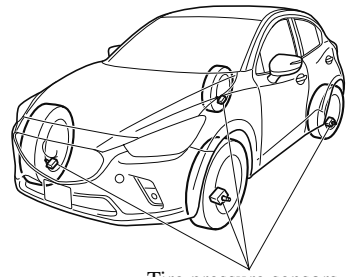

NOTE
When the ambient temperature is low due to seasonal changes, tire temperatures are also lower. When the tire temperature decreases, the air pressure decreases as well. The TPMS warning light may illuminate more frequently. Visually inspect the tires daily before driving, and check tire pressures monthly with a tire pressure gauge. When checking tire pressures, use of a digital tire pressure gauge is recommended.

TPMS does not alleviate your need to check the pressure and condition of all four tires regularly.

⚠ CAUTION

➢ *Each tire, including the spare (if provided), should be checked monthly when cold and inflated to the inflation pressure recommended by the vehicle manufacturer on the vehicle placard or tire inflation pressure label. (If your vehicle has tires of a different size than the size indicated on the vehicle placard or tire inflation pressure label, you should determine the proper tire inflation pressure for those tires.)*

 *Some models.

As an added safety feature, your vehicle has been equipped with a tire pressure monitoring system (TPMS) that illuminates a low tire pressure telltale when one or more of your tires is significantly under-inflated. Accordingly, when the low tire pressure telltale illuminates, you should stop and check your tires as soon as possible, and inflate them to the proper pressure. Driving on a significantly under-inflated tire causes the tire to overheat and can lead to tire failure. Under-inflation also reduces fuel efficiency and tire tread life, and may affect the vehicle's handling and stopping ability.
Please note that the TPMS is not a substitute for proper tire maintenance, and it is the driver's responsibility to maintain correct tire pressure, even if under-inflation has not reached the level to trigger illumination of the TPMS low tire pressure telltale.
Your vehicle has also been equipped with a TPMS malfunction indicator to indicate when the system is not operating properly.
The TPMS malfunction indicator is combined with the low tire pressure telltale. When the system detects a malfunction, the telltale will flash for approximately one minute and then remain continuously illuminated. This sequence will continue upon subsequent vehicle start-ups as long as the malfunction exists. When the malfunction indicator is illuminated, the system may not be able to detect or signal low tire pressure as intended. TPMS malfunctions may occur for a variety of reasons, including the installation of replacement or alternate tires or wheels on the vehicle that prevent the TPMS from functioning properly. Always check the TPMS malfunction telltale after replacing one or more tires or wheels on your vehicle to ensure that the replacement or alternate tires and wheels allow the TPMS to continue to function properly.

➢ *To avoid false readings, the system samples for a little while before indicating a problem. As a result it will not instantaneously register a rapid tire deflation or blow out.*

▼ System Error Activation

When the warning light flashes, there may be a system malfunction. Consult an Authorized Mazda Dealer.
A system error activation may occur in the following cases:

- When there is equipment or a device near the vehicle using the same radio frequency as that of the tire pressure sensors.
- When a metallic device such as a non-genuine navigation system is equipped near the center of the dashboard, which may block radio signals from the tire pressure sensor to the receiver unit.
- When using the following devices in the vehicle that may cause radio interference with the receiver unit.
  - A digital device such as a personal computer.
  - A current converter device such as a DC-AC converter.
- When excess snow or ice adheres to the vehicle, especially around the wheels.
- When the tire pressure sensor batteries are exhausted.
- When using a wheel with no tire pressure sensor installed.
- When using tires with steel wire reinforcement in the side walls.
- When using tire chains.

▼ Tires and Wheels

⚠ CAUTION

When inspecting or adjusting the tire air pressures, do not apply excessive force to the stem part of the wheel unit. The stem part could be damaged.

Changing tires and wheels

The following procedure allows the TPMS to recognize a tire pressure sensor's unique ID signal code whenever tires or wheels are changed, such as changing to and from winter tires.

NOTE
Each tire pressure sensor has a unique ID signal code. The signal code must be registered with the TPMS before it can work. The easiest way to do it is to have an Authorized Mazda Dealer change your tire and complete ID signal code registration.

When having tires changed at an Authorized Mazda Dealer

When an Authorized Mazda Dealer changes your vehicle's tires, they will complete the tire pressure sensor ID signal code registration.

When changing tires yourself

If you or someone else changes tires, you or someone else can also undertake the steps for the TPMS to complete the ID signal code registration.

1. After tires have been changed, switch the ignition ON, then back to ACC or OFF.
2. Wait for about 15 minutes.
3. After about 15 minutes, drive the vehicle at a speed of at least 25 km/h (16 mph) for 10 minutes and the tire pressure sensor ID signal code will be registered automatically.

NOTE
If the vehicle is driven within about 15 minutes of changing tires, the tire pressure monitoring system warning light will flash because the sensor ID signal code would not have been registered. If this happens, park the vehicle for about 15 minutes, after which the sensor ID signal code will register upon driving the vehicle for 10 minutes.

Replacing tires and wheels

⚠ CAUTION

- *When replacing/repairing the tires or wheels or both, have the work done by an Authorized Mazda Dealer, or the tire pressure sensors may be damaged.*
- *The wheels equipped on your Mazda are specially designed for installation of the tire pressure sensors. Do not use non-genuine wheels, otherwise it may not be possible to install the tire pressure sensors.*

Be sure to have the tire pressure sensors installed whenever tires or wheels are replaced.
When having a tire or wheel or both replaced, the following types of tire pressure sensor installations are possible.

- The tire pressure sensor is removed from the old wheel and installed to the new one.

- The same tire pressure sensor is used with the same wheel. Only the tire is replaced.
- A new tire pressure sensor is installed to a new wheel.

NOTE

- *The tire pressure sensor ID signal code must be registered when a new tire pressure sensor is purchased. For purchase of a tire pressure sensor and registration of the tire pressure sensor ID signal code, consult an Authorized Mazda Dealer.*
- *When reinstalling a previously removed tire pressure sensor to a wheel, replace the grommet (seal between valve body/sensor and wheel) for the tire pressure sensor.*

Rear View Monitor*

The rear view monitor provides visual images of the rear of the vehicle when reversing.

WARNING

Always drive carefully confirming the safety of the rear and the surrounding conditions by looking directly with your eyes:
Reversing the vehicle by only looking at the screen is dangerous as it may cause an accident or a collision with an object. The rear view monitor is only a visual assist device when reversing the vehicle. The images on the screen may be different from the actual conditions.

CAUTION

- *Do not use the rear view monitor under the following conditions: Using the rear view monitor under the following conditions is dangerous and could result in injury or vehicle damage or both.*
  - *Icy or snow-covered roads.*
  - *Tire chains or a temporary spare tire is installed.*
  - *The liftgate is not fully closed.*
  - *The vehicle is on a road incline.*
- *When the display is cold, images may course across the monitor or the screen and may be dimmer than usual, which could cause difficulty in confirming the surrounding conditions of the vehicle. Always drive carefully confirming the safety of the rear and the surrounding conditions by looking directly with your eyes.*
- *Do not apply excessive force to the camera. The camera position and angle may deviate.*
- *Do not disassemble, modify, or remove it as it may no longer be waterproof.*
- *The camera cover is made of plastic. Do not apply degreasing agents, organic solvents, wax, or glass coating agents to the camera cover. If any are spilled on the cover, wipe off with a soft cloth immediately.*
- *Do not rub the camera cover forcefully with an abrasive or hard brush. The camera cover or lens may be scratched which might affect the images.*

NOTE

 *Some models.

- *If water, snow, or mud is stuck on the camera lens, wipe it off using a soft cloth. If it cannot be wiped off, use a mild detergent.*
- *If the camera temperature changes rapidly (Hot to cold, cold to hot), the rear view monitor may not operate correctly.*
- *When replacing the tires, consult an Authorized Mazda Dealer. Replacing the tires could result in deviation of the guide lines which appear on the display.*
- *If the vehicle's front, side, or rear has been involved in a collision, the alignment of the rear view parking camera (location, installation angle) may have deviated. Always consult an Authorized Mazda Dealer to have the vehicle inspected.*
- *If "No Video Signal Available" is indicated in the display, there could be a problem with the camera. Have your vehicle inspected at an Authorized Mazda Dealer.*

▼ Rear View Parking Camera Location

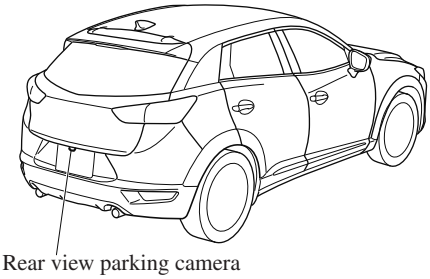

▼ Switching to the Rear View Monitor Display

Shift the shift lever/selector lever to R with the ignition switched ON to switch the display to the rear view monitor display.

NOTE
When the shift lever/selector lever is shifted from R to another shift lever/selector lever position, the screen returns to the previous display.

▼ Displayable Range on the Screen

The images on the screen may be different from the actual conditions.

(Screen display)

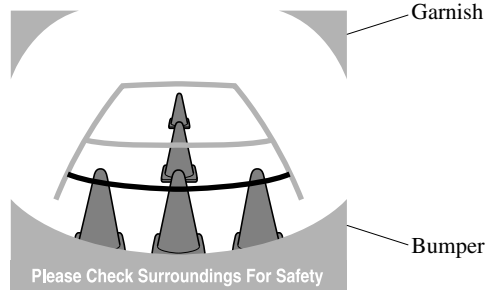

(Actual view)

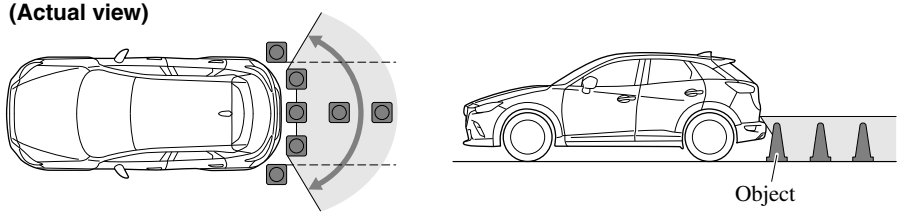

NOTE

- *The displayable range varies depending on the vehicle and road conditions.*
- *The displayable range is limited. Objects under the bumper or around the bumper ends cannot be displayed.*
- *The distance appearing in the displayed image is different from the actual distance because the rear view parking camera is equipped with a specific lens.*
- *Some optionally installed vehicle accessories may be picked up by the camera. Do not install any optional parts that can interfere with the camera view, such as illuminating parts or parts made of reflective material.*
- *It may be difficult to see the display under the following conditions, however, it does not indicate a malfunction.*
  - *In darkened areas.*
  - *When the temperature around the lens is high/low.*
  - *When the camera is wet such as on a rainy day or during periods of high humidity.*
  - *When foreign material such as mud is stuck around the camera.*
  - *When the camera lens reflects sunlight or headlight beams.*
- *Image display may be delayed if the temperature around the camera is low.*

▼ Viewing the Display

Guide lines which indicate the width of the vehicle (yellow) are displayed on the screen as a reference to the approximate width of the vehicle in comparison to the width of the parking space you are about to back into.
Use this display view for parking your vehicle in a parking space or garage.

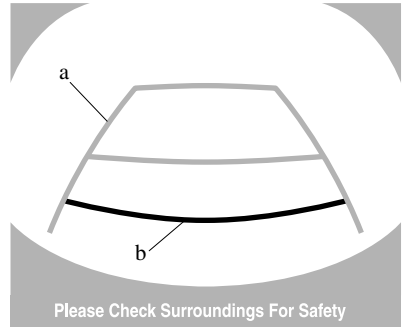

a) Vehicle width guide lines (yellow)
These guide lines serve as a reference to the approximate width of the vehicle.
b) Distance guide lines.
These guide lines indicate the approximate distance to a point measured from the vehicle's rear (from the end of the bumper).

- The red and yellow lines indicate the points about 50 cm (19 in) for the red line and 100 cm (39.3 in) for the yellow lines from the rear bumper (at the center point of each of the lines).

⚠ CAUTION

The guide lines on the screen are fixed lines. They are not synced to the driver's turning of the steering wheel. Always be careful and check the area to the vehicle's rear and the surrounding area directly with your eyes while backing up.

▼ Rear View Monitor Operation

The operation of the rear view monitor when reversing the vehicle varies depending on the traffic, road, and vehicle conditions. The amount of steering and the timing also varies depending on conditions, so confirm the surrounding conditions directly with your eyes and steer the vehicle in accordance with the conditions.
Be well aware of the above cautions prior to using the rear view monitor.

NOTE
Images displayed on the monitor from the rear view parking camera are reversed images (mirror images).

Rear View Monitor

1. Shift the shift lever/selector lever to R to switch the display to the rear view monitor display.
2. Confirming the surrounding conditions, reverse the vehicle.

(Display condition)

(Vehicle condition)

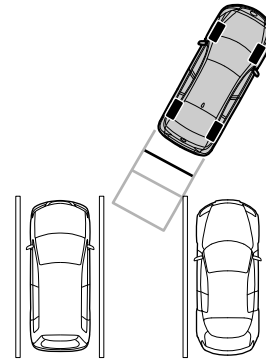

3. After your vehicle begins entering the parking space, continue backing up slowly so that the distance between the vehicle width lines and the sides of the parking space on the left and right are roughly equal.
4. Continue to adjust the steering wheel until the vehicle width guide lines are parallel to the left and right sides of the parking space.
5. Once they are parallel, straighten the wheels and back your vehicle slowly into the parking space. Continue checking the vehicle's surroundings and then stop the vehicle in the best possible position.

(Display condition)

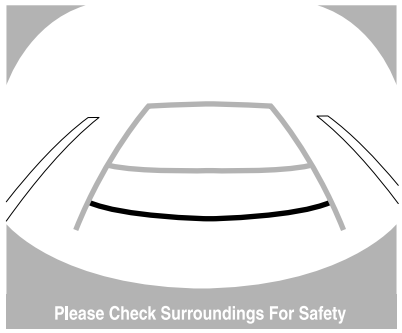

(Vehicle condition)

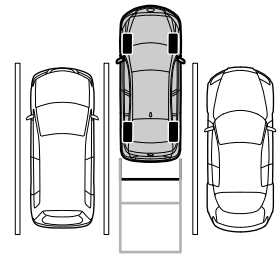

6. When the shift lever/selector lever is shifted from R to another shift lever/selector lever position, the screen returns to the previous display.

NOTE

- *If the parking space has division lines, straighten the wheels when the vehicle width guide lines are parallel to them.*
- *Because there may be a difference between the displayed image, such as indicated below, and the actual conditions when parking, always verify the safety at the rear of the vehicle and the surrounding area directly with your eyes.*
  - *In the image of the parking space (or garage) displayed on the screen, the back end and distance guide lines may appear aligned in the monitor, but they may not actually be aligned on the ground.*
  - *When parking in a space with a division line on only one side of the parking space, the division line and the vehicle width guide line appear aligned in the monitor, but they may not actually be aligned on the ground.*

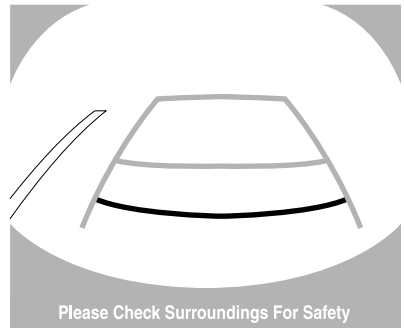

▼ Variance Between Actual Road Conditions and Displayed Image

Some variance occurs between the actual road and the displayed road. Such variance in distance perspective could lead to an accident. Note the following conditions that may cause a variance in distance perspective.

When the vehicle is tilted due to the weight of passengers and load

When the vehicle rear is lowered, the object displayed on the screen appears farther than the actual distance.

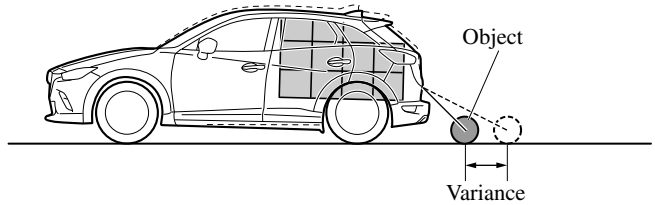

When there is a steep grade behind the vehicle

When there is a steep upgrade (downgrade) behind the vehicle, the object displayed on the screen appears farther (downgrade: closer) than the actual distance.

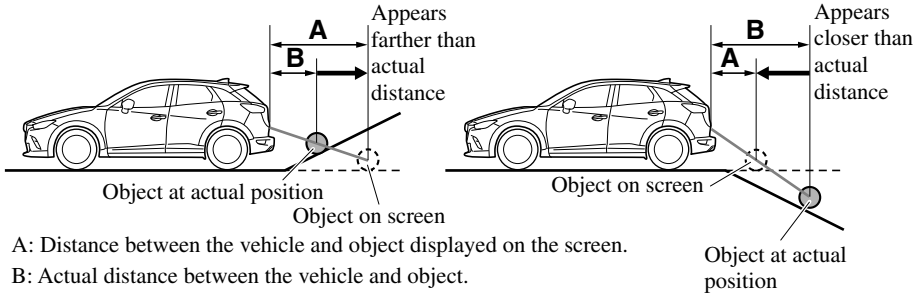

A: Distance between the vehicle and object displayed on the screen.
B: Actual distance between the vehicle and object.

Three-dimensional object on vehicle rear

Because the distance guide lines are displayed based on a flat surface, the distance to the three-dimensional object displayed on the screen is different from the actual distance.

(Screen display)

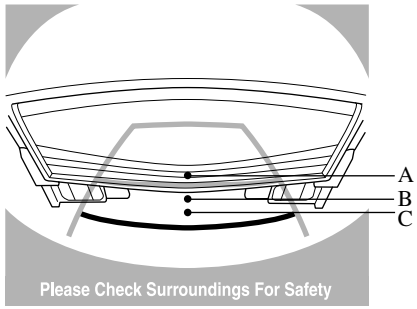

Sensed distance on screen A>B>C

(Actual condition)

(Actual distance) B>C=A

▼ Picture Quality Adjustment

⚠ WARNING

Always adjust the picture quality of the rear view monitor while the vehicle is stopped:
Do not adjust the picture quality of the rear view monitor while driving the vehicle. Adjusting the picture quality of the rear view monitor such as brightness, contrast, color, and tint while driving the vehicle is dangerous as it could distract your attention from the vehicle operation which could lead to an accident.

Picture quality adjustment must be done while the shift lever/selector lever is in reverse (R). There are four settings which can be adjusted including, brightness, contrast, tint, and color. When adjusting, pay sufficient attention to the vehicle surroundings.

1. Select the ⚙ icon on the screen to display the tabs.
2. Select the desired tab item.
3. Adjust the brightness, contrast, tint, and color using the slider.
   If you need to reset, press the reset button.
4. Select the ⚙ icon on the screen to close the tab.

MEMO

5 Interior Features

Use of various features for ride comfort, including air-conditioning and audio system.

Climate Control System.....5-4
Operating Tips..... 5-4
Vent Operation.....5-5
Manual Type.....5-7
Fully Automatic Type.....5-12

Before Using the Audio System.....5-16
Audio Control Switch.....5-16
AUX/USB mode.....5-17
Antenna.....5-19

Audio Set [Type A (non-touchscreen)].....5-20
Power/Volume/Sound Controls..... 5-20
Clock.....5-22
Operating the Radio.....5-23
How to use AUX mode..... 5-24
How to use USB mode..... 5-25
How to use iPod mode.....5-28
Error Indications.....5-30
Bluetooth®.....5-31
Bluetooth® Preparation..... 5-34
Available Language.....5-43
Security Setting..... 5-44
Bluetooth® Audio.....5-46
Bluetooth® Hands-Free..... 5-48
Voice Recognition.....5-56
Voice Recognition Learning Function (Speaker Enrollment).....5-57
Troubleshooting.....5-60

Audio Set [Type B (touchscreen)].....5-64
Basic Operation Method.....5-64
Home screen..... 5-68
Volume/Display/Sound Controls..... 5-69
Operating the Radio.....5-71
Operating the Satellite Radio*..... 5-75
How to use AUX mode..... 5-78
How to use USB mode..... 5-79
Bluetooth®.....5-84
Bluetooth® Preparation..... 5-87
Available Language..... 5-89
Bluetooth® Audio.....5-90
How to Use Pandora®*.....5-93
How to Use Aha™..... 5-95
How to Use Stitcher™ Radio..... 5-98
Bluetooth® Hands-Free..... 5-100
Voice Recognition.....5-110
Settings..... 5-112
Applications.....5-114
Troubleshooting.....5-115

Appendix..... 5-120
Things You Need to Know.....5-120

*Some models.

Interior Equipment..... 5-126
Sunvisors..... 5-126
Interior Lights.....5-126
Accessory Socket..... 5-128
Cup Holder..... 5-129
Bottle Holder.....5-131
Storage Compartments..... 5-131

MEMO

Operating Tips

- Operate the climate control system with the engine running.
- To prevent the battery from being discharged, do not leave the fan control dial on for a long period of time with the ignition switched ON when the engine is not running.
- Clear all obstructions such as leaves, snow and ice from the hood and the air inlet in the cowl grille to improve the system efficiency.
- Use the climate control system to defog the windows and dehumidify the air.
- The recirculate mode should be used when driving through tunnels or while in a traffic jam, or when you would like to shut off outside air for quick cooling of the interior.
- Use the outside air position for ventilation or windshield defrosting.
- If the vehicle has been parked in direct sunlight during hot weather, open the windows to let warm air escape, then run the climate control system.
- Run the air conditioner about 10 minutes at least once a month to keep internal parts lubricated.
- Have the air conditioner checked before the weather gets hot. Lack of refrigerant may make the air conditioner less efficient.

The refrigerant specifications are indicated on a label attached to the inside of the engine compartment. If the wrong type of refrigerant is used, it could result in a serious malfunction of the air conditioner. Consult a professional, government certified repairer for the inspection or repair because a special device is required for the air conditioner maintenance.
For details, consult an Authorized Mazda Dealer.

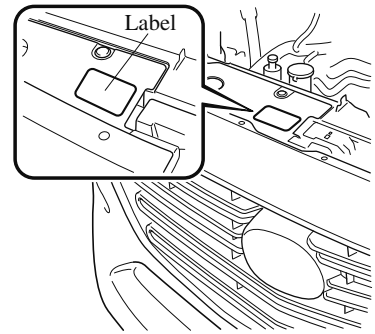

Vent Operation

▼ Adjusting the Vents

Directing airflow

To adjust the direction of airflow, move the adjustment knob.

NOTE

- *When using the air conditioner under humid ambient temperature conditions, the system may blow fog from the vents. This is not a sign of trouble but a result of humid air being suddenly cooled.*

Center vents (driver) and Side vents

Air vent open/close

NOTE
The air vents can be fully opened and closed by operating the knob.

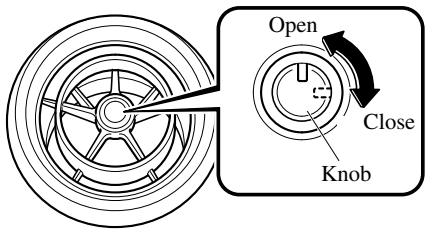

Airflow direction adjustment

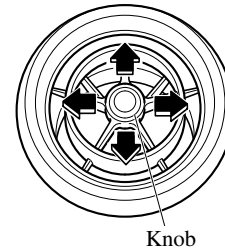

Center vents (front passenger)

Air vent open/close

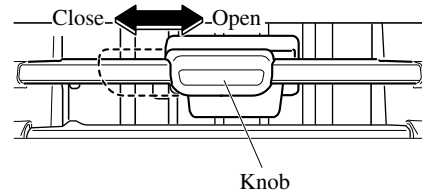

Airflow direction adjustment

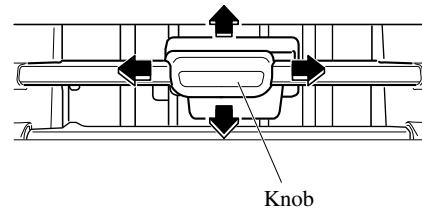

▼ Selecting the Airflow Mode

Dashboard Vents

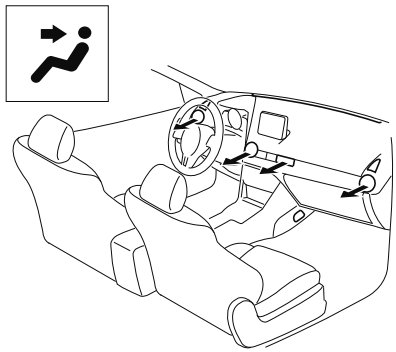

Defroster and Floor Vents

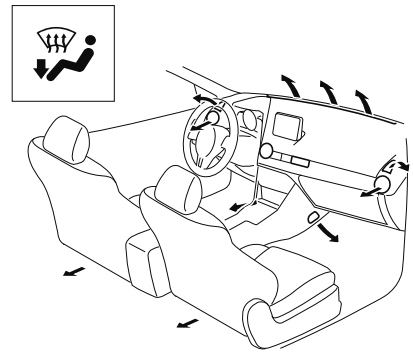

Dashboard and Floor Vents

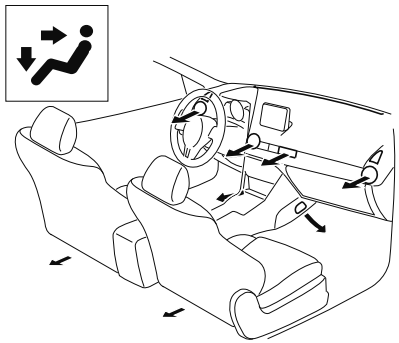

Defroster Vents

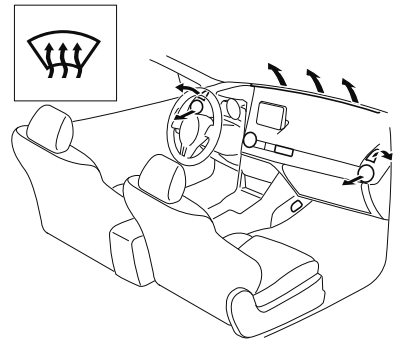

Floor Vents

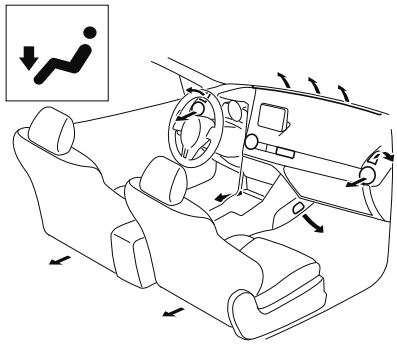

NOTE

The location airflow exits the air vents and the airflow amount may change depending on the open or close status of the air vents.

Manual Type

Type A

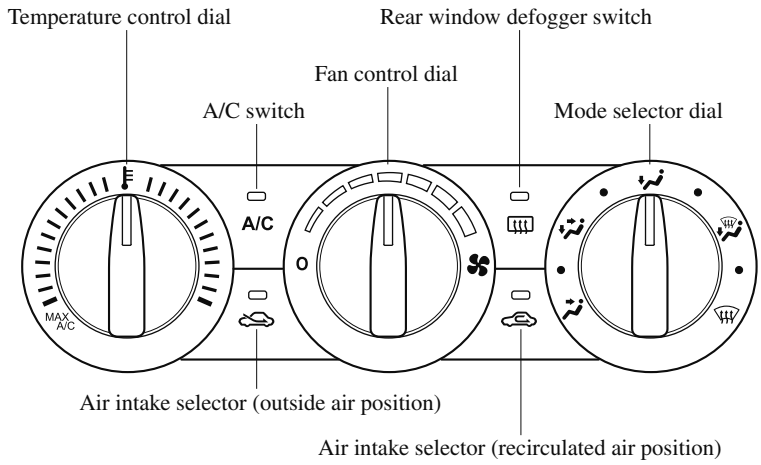

Type B

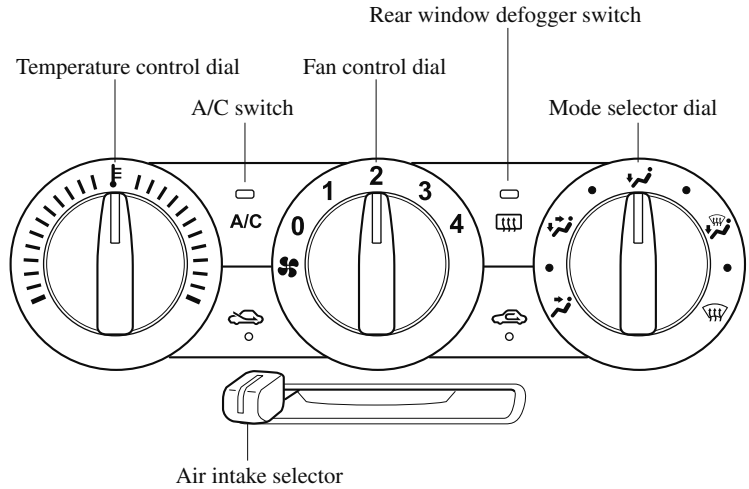

▼ Control Switches

Temperature control dial

This dial controls temperature. Turn it clockwise for hot and counterclockwise for cold.

NOTE
(Type A)
When the mode is set to ⁞ or ⁞ with the fan control dial in a position other than 0 and the temperature control dial in the maximum cold position, the air intake selector switches to the recirculated air position and the A/C turns on automatically.
If A/C is not desired, press the A/C switch to turn it off.

Fan control dial

This dial allows variable fan speeds.
(Type A)
The fan has seven speeds.
(Type B)
0—Fan off
1—Low speed
2—Medium low speed
3—Medium high speed
4—High speed

Mode selector dial

Turn the mode selector dial to select airflow mode (page 5-6).

NOTE

- *The mode selector dial can be set at the intermediate positions (●) between each mode. Set the dial to an intermediate position if you want to split the airflow between the two modes.*
- *For example, when the mode selector dial is at the ● position between the ⁞ and ⁞ positions, airflow from the floor vent is less than that of the ⁞ position.*

A/C switch

(Type A)
Press the A/C switch to turn the air conditioner on. The indicator light on the switch will illuminate when the fan control dial is in any position except OFF.
(Type B)
Press the A/C switch to turn the air conditioner on. The indicator light on the switch will illuminate when the fan control dial is set at position 1, 2, 3, or 4.
Press the switch once again to turn the air conditioner off.

NOTE
The air conditioner may not function when the outside temperature approaches 0 °C (32 °F).

Air intake selector (Type A)

This switch controls the source of air entering the vehicle.
Press the air intake selector switch to alternate between the outside air and recirculated air positions.

Recirculated air position ( )

Outside air is shut off. Air within the vehicle is recirculated.

Outside air position ( )

Outside air is allowed to enter the cabin. Use this mode for ventilation or windshield defrosting.

WARNING

Do not use the recirculated air position in cold or rainy weather:
Using the recirculated air position in cold or rainy weather is dangerous as it will cause the windows to fog up. Your vision will be hampered, which could lead to a serious accident.

Air intake selector (Type B)

This lever controls the source of air entering the vehicle.

It is recommended that under normal conditions the switch be kept in the outside air position.

Recirculated air position ( )

Outside air is shut off. Air within the vehicle is recirculated.

Outside air position ( )

Outside air is taken into the vehicle. Use this position for normal ventilation and heating.

WARNING

Do not use the position in cold or rainy weather:
Using the position in cold or rainy weather is dangerous as it will cause the windows to fog up. Your vision will be hampered, which could lead to a serious accident.

Rear window defogger switch

Press the rear window defogger switch to defrost the rear window.

Refer to Rear Window Defogger on page 4-53.

▼ Heating

1. Set the mode selector dial to the position.
2. **(Type A)**
   Set the air intake selector to the outside air position.
   (Type B)
   Set the air intake selector to the position.
3. Set the temperature control dial to the hot position.
4. Set the fan control dial to the desired speed.
5. If dehumidified heating is desired, turn on the air conditioner.

NOTE

- *If the windshield fogs up easily, set the mode selector dial to the position.*
- *If cooler air is desired at face level, set the mode selector dial to the position and adjust the temperature control dial to maintain maximum comfort.*
- *The air to the floor is warmer than air to the face (except when the temperature control dial is set at the extreme hot or cold position).*

▼ Cooling

1. Set the mode selector dial to the position.
2. Set the temperature control dial to the cold position.
3. Set the fan control dial to the desired speed.
4. Turn on the air conditioner by pressing the A/C switch.

5. After cooling begins, adjust the fan control dial and temperature control dial as needed to maintain maximum comfort.

CAUTION

If the air conditioner is used while driving up long hills or in heavy traffic, monitor the high engine coolant temperature warning light to see if it is illuminated or flashing (page 4-24).
The air conditioner may cause engine overheating. If the warning light is illuminated or flashing, turn the air conditioner off (page 7-22).

NOTE

- ***(Type A)***
  When maximum cooling is desired, set the temperature control dial to the extreme cold position and set the air intake selector to the recirculated air position, then turn the fan control dial fully clockwise.
- ***(Type B)***
  When maximum cooling is desired, set the temperature control dial to the extreme cold position and set the air intake selector to the recirculated air position, then set the fan control dial to position 4.
- *If warmer air is desired at floor level, set the mode selector dial at the position and adjust the temperature control dial to maintain maximum comfort.*
- *The air to the floor is warmer than air to the face (except when the temperature control dial is set at the extreme hot or cold position).*

▼ Ventilation

1. Set the mode selector dial to the position.
2. **(Type A)**
   Set the air intake selector to the outside air position.
   (Type B)
   Set the air intake selector to the position.
3. Set the temperature control dial to the desired position.
4. Set the fan control dial to the desired speed.

▼ Windshield Defrosting and Defogging

1. Set the mode selector dial to the position.
2. **(Type B)**
   Set the air intake selector to the position.
3. Set the temperature control dial to the desired position.
4. Set the fan control dial to the desired speed.
5. If dehumidified heating is desired, turn on the air conditioner.

WARNING

Do not defog the windshield using the position with the temperature control set to the cold position:
Using the position with the temperature control set to the cold position is dangerous as it will cause the outside of the windshield to fog up. Your vision will be hampered, which could lead to a serious accident. Set the temperature control to the hot or warm position when using the position.

NOTE

- ***(Type A)***
  For maximum defrosting, turn on the air conditioner, set the temperature control dial to the extreme hot position, and turn the fan control dial fully clockwise.
- ***(Type B)***
  For maximum defrosting, turn on the air conditioner, set the temperature control dial to the extreme hot position, and the fan control dial to position 4.
- *If warm air is desired at the floor, set the mode selector dial to the position.*
- ***(Type A)***
  In the or position, the air conditioner is automatically turned on and the outside air position is automatically selected to defrost the windshield. In the or position, the outside air position cannot be changed to the recirculated air position.

▼ Dehumidifying

Operate the air conditioner in cool or cold weather to help defog the windshield and side windows.

1. Set the mode selector dial to the desired position.
2. **(Type A)**
   Set the air intake selector to the outside air position.
   (Type B)
   Set the air intake selector to the position.
3. Set the temperature control dial to the desired position.
4. Set the fan control dial to the desired speed.
5. Turn on the air conditioner by pressing the A/C switch.

NOTE
One of the functions of the air conditioner is dehumidifying the air and, to use this function, the temperature does not have to be set to cold. Therefore, set the temperature control dial to the desired position (hot or cold) and turn on the air conditioner when you want to dehumidify the cabin air.

Fully Automatic Type

Type A

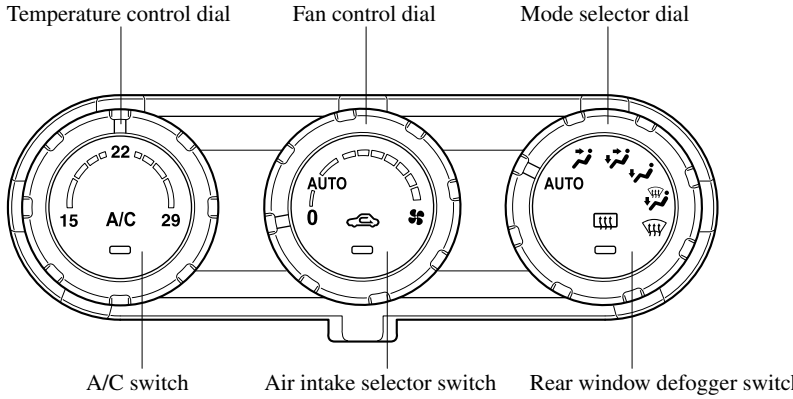

Type B

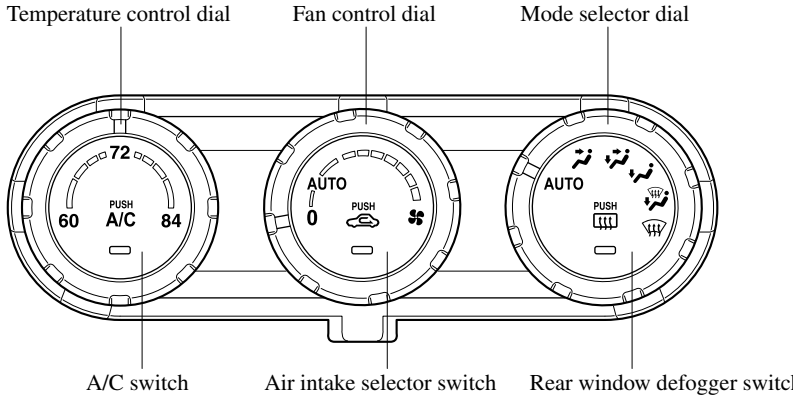

▼ Control Switches

Temperature control dial

This dial controls temperature. Turn it clockwise for hot and counterclockwise for cold.

Fan control dial

The fan has seven speeds.

AUTO position

The amount of airflow will be automatically controlled in accordance with the set temperature.

Except AUTO position

The airflow amount can be adjusted to the desired level by turning the dial.

0 position

To turn off the system, set the dial to 0 position.

Mode selector dial

Turn the mode selector dial to select airflow mode (page 5-6).

AUTO position

The airflow mode automatically adjusts to the selected temperature.

Except AUTO position

The desired airflow position can be selected by turning the dial.

NOTE

- *With the airflow mode set to the position and the temperature control dial set at a medium temperature, heated air is directed to the feet and air at a comparably lower temperature will flow through the central, left and right vents.*
- *When the fan control dial is ON, and the mode selector dial is in the or position, the air conditioner is automatically turned on and the outside air position is automatically selected to defrost the windshield. In the or position, the outside air position cannot be changed to the recirculated air position.*

A/C switch

The air conditioner (cooling/dehumidifying functions) can be turned on or off by pressing the switch while the fan control dial is at a position other than 0. The indicator light turns on while the air conditioner is operating.

NOTE
The air conditioner may not function when the outside temperature approaches 0 °C (32 °F).

Air intake selector

Outside or recirculated air positions can be selected. Press the switch to select outside/recirculated air positions.

Recirculated air position (indicator light illuminated)

Outside air is shut off. Use this position when going through tunnels, driving in congested traffic (high engine exhaust areas) or when quick cooling is desired.

Outside air position (indicator light turned off)

Outside air is allowed to enter the cabin. Use this mode for ventilation or windshield defrosting.

WARNING

Do not use the position in cold or rainy weather:
Using the position in cold or rainy weather is dangerous as it will cause the windows to fog up. Your vision will be hampered, which could lead to a serious accident.

Rear window defogger switch

Press the rear window defogger switch to defrost the rear window.
Refer to Rear Window Defogger on page 4-53.

▼ Operation of Automatic Air Conditioner

1. Set the mode selector dial to the AUTO position.
2. Set the air intake selector to the outside air position (indicator light turned off).

   NOTE
   If the recirculated air position is used for long periods in cold weather or high humidity, the windshield may fog up more easily.
3. Set the fan control dial to the AUTO position.
4. Press the A/C switch to operate the air conditioner (turn indicator light on).
5. Set the temperature control dial to the desired position.
6. To turn off the system, set the fan control dial to the 0 position.

NOTE

- *Setting the temperature to maximum hot or cold will not provide the desired temperature at a faster rate.*
- *When selecting heat, the system will restrict airflow until it has warmed to prevent cold air from blowing out of the vents.*

▼ Windshield Defrosting and Defogging

Set the mode selector dial to the position and turn the fan control dial to the desired speed.
In this position, the outside air position is automatically selected, and when the fan control dial is ON, the air conditioner automatically turns on. The air conditioner will directly dehumidify the air to the front windshield and side windows (page 5-6). Airflow amount will be increased.

WARNING

Set the temperature control to the hot or warm position when defogging (position):
Using the position with the temperature control set to the cold position is dangerous as it will cause the outside of the windshield to fog up. Your vision will be hampered, which could lead to a serious accident.

NOTE
Use the temperature control dial to increase the air flow temperature and defog the windshield more quickly.

▼ Sunlight/Temperature Sensor

Sunlight sensor

Do not place objects on the sunlight sensor. Otherwise, the interior temperature may not adjust correctly.

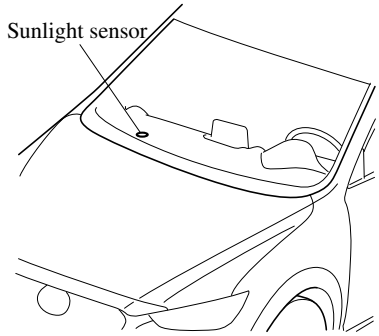

Interior temperature sensor

Do not cover the interior temperature sensor. Otherwise, the interior temperature may not adjust correctly.

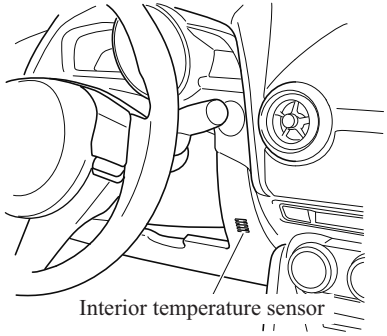

Audio Control Switch

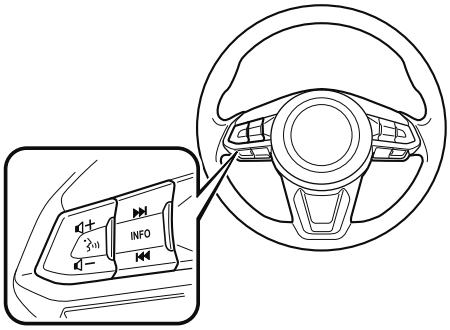

▼ Adjusting the Volume

To increase the volume, press up the volume switch (+).
To decrease the volume, press down the volume switch (−).

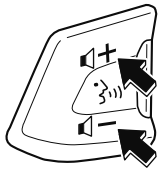

▼ Seek Switch

AM/FM radio

Press the seek switch (⏮, ⏭). The radio switches to the next/previous stored station in the order that it was stored.
Press and hold the seek switch (⏮, ⏭) to seek all usable stations at a higher or lower frequency whether programmed or not.

Radio stations which have been previously stored in the auto memory tuning (Type A)/ favorite radio (Type B) can be called up by pressing the seek switch (⏮, ⏭) while any radio station stored in the auto memory tuning (Type A)/favorite radio (Type B) is being received. Radio stations can be called up in the order they were stored with each press of the switch (⏮, ⏭).

USB Audio/Bluetooth® Audio

Press the seek switch (⏭) to skip forward to the beginning of the next track.
Press the seek switch (⏮) within a few seconds after playback begins to track down to the beginning of the previous track.
Press the seek switch (⏮) after a few seconds have elapsed to start playback from the beginning of the current track.
Press and hold the seek switch (⏮, ⏭) to continuously switch the tracks up or down.

Pandora®/Aha™/Stitcher™ Radio (Type B)

Press the seek switch (⏭) to skip forward to the beginning of the next track.
Press and hold the seek switch (⏭) to evaluate the playback of the current song as “Like”.
Press and hold the seek switch (⏮) to evaluate the playback of the current song as “Dislike”.

AUX/USB mode

Audio can be heard from the vehicle's speakers by connecting a commercially-available portable audio unit to the auxiliary jack.
A commercially-available, non-impedance (3.5ϕ) stereo mini plug cable is required. Contact an Authorized Mazda Dealer for details.
In addition, audio can be played from the vehicle audio device by connecting a USB device to the USB port.

NOTE
(Type B)
The SD card slot is for the navigation system. For vehicles with the navigation system, the SD card (Mazda genuine) with stored map data is inserted into the SD card slot and used.

Type A

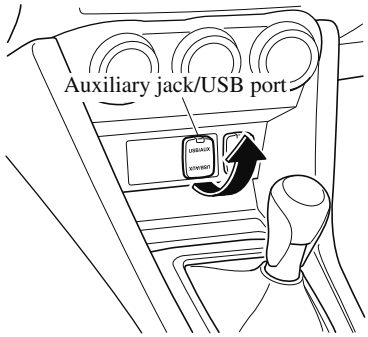

Type B

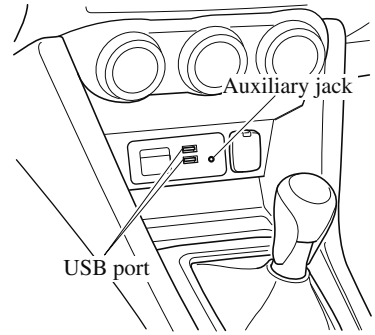

① How to use AUX mode (Type A) ..... page 5-24
② How to use USB mode (Type A) ..... page 5-25
③ How to use iPod mode (Type A) ..... page 5-28
④ How to use AUX mode (Type B) ..... page 5-78
⑤ How to use USB mode (Type B) ..... page 5-79

⚠ WARNING

Do not adjust the portable audio unit or a similar product while driving the vehicle:
Adjusting the portable audio unit or a similar product while driving the vehicle is dangerous as it could distract your attention from the vehicle operation which could lead to a serious accident. Always adjust the portable audio unit or a similar product while the vehicle is stopped.

⚠ CAUTION

Depending on the portable audio device, noise may occur when the device is connected to the vehicle accessory socket. (If noise occurs, do not use the accessory socket.)

NOTE

- *This mode may not be usable depending on the portable audio device to be connected.*
- *Before using the auxiliary jack/USB port, refer to the instruction manual for the portable audio device.*
- *Use a commercially-available, non-impedance (3.5ϕ) stereo mini plug for connecting the portable audio unit to the auxiliary jack. Before using the auxiliary jack, read the manufacturer's instructions for connecting a portable audio unit to the auxiliary jack.*
- *To prevent discharging of the battery, do not use the auxiliary input for long periods with the engine off or idling.*
- *When connecting a device to the auxiliary jack or USB port, noise may occur depending on the connected device. If the device is connected to the vehicle's accessory socket, the noise can be reduced by unplugging it from the accessory socket.*

▼ How to connect USB port/Auxiliary jack

Type A

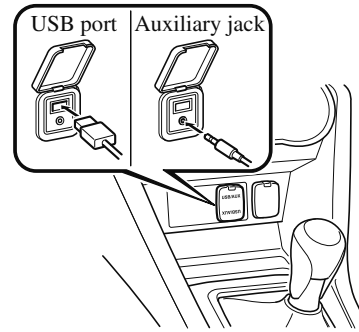

Type B

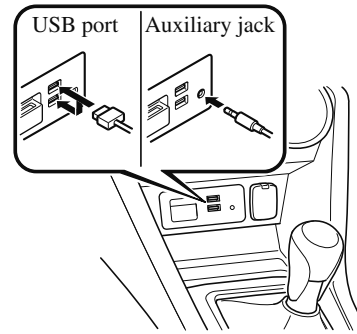

Connecting a device

1. If there is a cover on the AUX jack or USB port, remove the cover.
2. Connect the connector on the device to the USB port.

Connecting with a connector cable

1. If there is a cover on the AUX jack or USB port, remove the cover.
2. Connect the device plug/connector cable to the auxiliary jack/USB port.

WARNING

Do not allow the connection plug cord to get tangled with the parking brake or the shift lever (manual transaxle)/selector lever (automatic transaxle):
Allowing the plug cord to become tangled with the parking brake or the shift lever (manual transaxle)/selector lever (automatic transaxle) is dangerous as it could interfere with driving, resulting in an accident.

CAUTION

Do not place objects or apply force to the auxiliary jack/USB port with the plug connected.

NOTE

- *Insert the plug into the auxiliary jack/USB port securely.*
- *Insert or pull out the plug with the plug perpendicular to the auxiliary jack/USB port hole.*
- *Insert or remove the plug by holding its base.*

Antenna

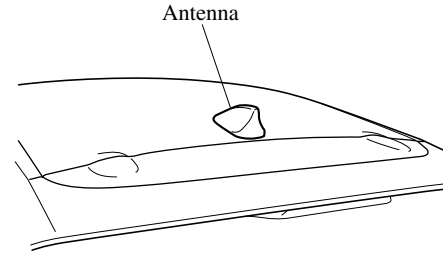

Power/Volume/Sound Controls

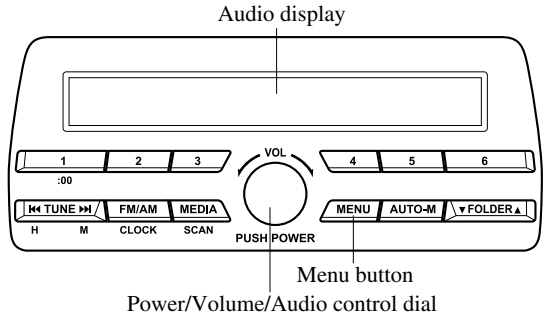

▼ Power ON/OFF

Switch the ignition to ACC or ON. Press the power/volume dial to turn the audio system on. Press the power/volume dial again to turn the audio system off.

▼ Volume adjustment

To adjust the volume, turn the power/volume dial. Turn the power/volume dial clockwise to increase volume, counterclockwise to decrease it.

▼ Audio sound adjustment

1. Press the menu button (**MENU**) to select the function. The selected function will be indicated.
2. Turn the audio control dial to adjust the selected functions as follows:

Indication	Setting value	
	Turn Counter-clockwise	Turn Clockwise
ALC (Automatic volume adjustment)	Level decrease	Level increase
BASS (Low pitch sound)	Decrease bass	Increase bass
TREB (Treble sound)	Decrease treble	Increase treble
FADE (Front/back volume balance)	Shift the sound to the front	Shift the sound to the rear
BAL (Left/right volume balance)	Shift the sound to the left	Shift the sound to the right
BEEP (Audio operation sound)	Off	On
BT SETUP	Select mode	
12Hr < > 24Hr (12 Hr/24 Hr time adjustment)	12Hr (Flashing)	24Hr (Flashing)

NOTE
*If not operated for several seconds, the display returns to the previous display. To reset bass, treble, fade, and balance, press the menu button (**MENU**) for 2 seconds. The unit will beep and "CLEAR" will be displayed.*

ALC (Automatic volume adjustment)

The automatic level control (ALC) changes the audio volume automatically according to the vehicle speed. The faster the vehicle speed, the higher the volume increases. ALC has ALC OFF and ALC LEVEL 1 to 7 modes. At ALC LEVEL 7, the amount that the volume can increase is at the maximum. Select the mode according to the driving conditions.

BEEP (Audio operation sound)

The setting for the operation sound when pressing and holding a button can be changed. The initial setting is ON. Set to OFF to mute the operation sound.

BT SETUP mode

Music and other audio such as voice data recorded on portable audio devices and mobile phones available on the market which are equipped with the Bluetooth® transmission function can be listened to via wireless transmission over the vehicle's speakers. Using the BT SETUP mode, these devices can be programmed to the Bluetooth® unit or changed (page 5-34).

12Hr < > 24Hr (12 Hr/24 Hr time adjustment)

Rotating the audio control dial switches the display between 12 and 24-hour clock time (page 5-22).

Audio Set [Type A (non-touchscreen)]

Clock

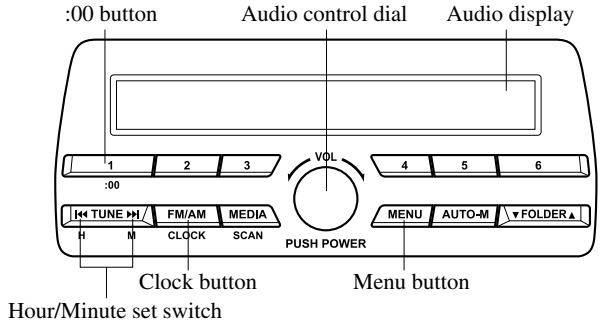

▼ Setting the time

The clock can be set at any time when the ignition is switched to ACC or ON.

1. To adjust the time, press the clock button (**FM/AM**) for about 2 seconds until a beep is heard.
2. The clock's current time will flash.
   Time adjustment
   - To adjust the time, press the hour/minute set button (⏮, ⏭) while the clock's current time is flashing.
   - The hours advance while the hour set button (⏮) is pressed. The minutes advance while the minute set button (⏭) is pressed.
3. Press the clock button (**FM/AM**) again to start the clock.

▼ Time resetting

1. Press the clock button (**FM/AM**) for about 2 seconds until a beep is heard.
2. Press the :00 button (1).
3. When the button is pressed, the time will be reset as follows:
   (Example)
   12:01—12:29→12:00
   12:30—12:59→1:00

NOTE

- *When the :00 button (1) is pressed, the seconds will start at "00".*
- *Switching between 12 and 24-hour clock time:*
  *Press the menu button (**MENU**) several times until 12 and 24-hour clock time are displayed. Turn the audio control dial in either direction, select the desired clock setting while the preferred clock time is flashing.*

Operating the Radio

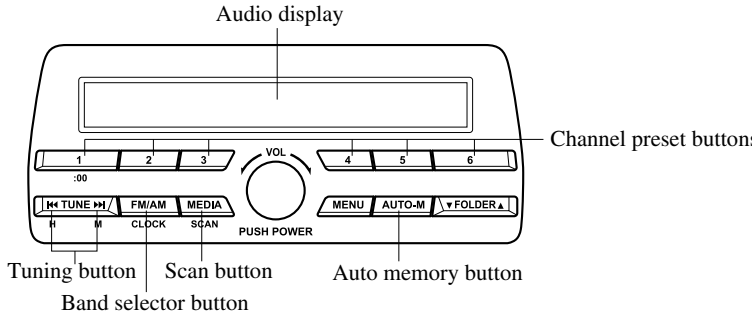

▼ Radio ON

Press a band selector button (**FM/AM**) to turn the radio on.

▼ Band selection

Successively pressing the band selector button (**FM/AM**) switches the bands as follows: FM1→FM2→AM.

The selected mode will be indicated.

NOTE
If the FM broadcast signal becomes weak, reception automatically changes from STEREO to MONO for reduced noise.

▼ Tuning

The radio has the following tuning methods: Manual, Seek, Scan, Preset channel, and Auto memory tuning. The easiest way to tune stations is to set them on preset channels.

Manual tuning

Select the station by pressing the tuning button (⏮, ⏭) lightly.

Seek tuning

Automatic search for radio stations starts when the tuning button (⏮, ⏭) is pressed until a beep sound is heard. The search stops when a station is found.

NOTE
If you continue to press and hold the button, the frequency will continue changing without stopping.

Scan tuning

Press and hold the scan button (**MEDIA**) to automatically sample strong stations. Scanning stops at each station for about 5 seconds. To hold a station, press and hold the scan button (**MEDIA**) again during this interval.

Preset channel tuning

The 6 preset channels can be used to store 6 AM and 12 FM stations.

1. To set a channel first select AM, FM1, or FM2. Tune to the desired station.
2. Press a channel preset button for about 2 seconds until a beep is heard. The preset channel number or station frequency will be displayed. The station is now held in the memory.

3. Repeat this operation for the other stations and bands you want to store. To tune one in the memory, select AM, FM1, or FM2 and then press its channel preset button. The station frequency or the channel number will be displayed.

Auto memory tuning

This is especially useful when driving in an area where the local stations are not known.

Press and hold the auto memory button (**AUTO-M**) for about 2 seconds until a beep is heard; the system will automatically scan and temporarily store up to 6 stations with the strongest frequencies in each selected band in that area.

After scanning is completed, the station with the strongest frequency will be tuned and its frequency displayed. Press and release the auto memory button (**AUTO-M**) to recall stations from the auto-stored stations. One stored station will be selected each time and its frequency and channel number will be displayed.

NOTE
If no stations can be tuned after scanning operations, "A" will be displayed.

How to use AUX mode

1. Switch the ignition to ACC or ON.
2. Press the power/volume dial to turn the audio system on.
3. Press the media button (**MEDIA**) of the audio unit to change to the AUX mode.

NOTE

- *When the device is not connected to the auxiliary jack, the mode does not switch to the AUX mode.*
- *Adjust the audio volume using the portable audio device or audio unit.*
- *Audio adjustments other than audio volume can only be done using the portable audio device.*
- *If the connection plug is pulled out from the auxiliary jack while in AUX mode, noise may occur.*

How to use USB mode

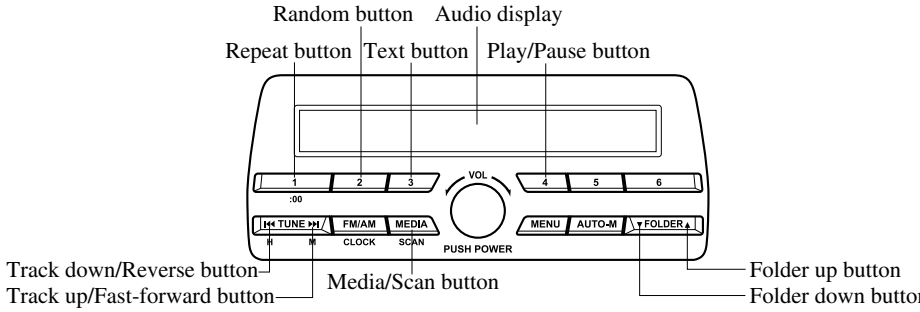

Type	Playable data
USB mode	MP3/WMA/AAC file

This unit does not support a USB 3.0 device. In addition, other devices may not be supported depending on the model or OS version.

▼ Playback

1. Switch the ignition to ACC or ON.
2. Press the power/volume dial to turn the audio system on.
3. Press the media button (**MEDIA**) to switch to the USB mode and start playback.

NOTE

- *Some devices such as smart phones may require a setting change to allow operation using a USB connection.*
- *When the USB device is not connected, the mode does not switch to USB mode.*
- *When there is no playable data in the USB device, "NO CONTENTS" is flashed.*
- *Playback of the USB device is in the order of the folder numbers. Folders which have no MP3/WMA/AAC files are skipped.*
- *Do not remove the USB device while in the USB mode. The data may be damaged.*

Pause

To stop playback, press the play/pause button (4).
Press the button again to resume playback.

Fast-forward/Reverse

Press and hold the fast-forward button (▶▶|) to advance through a track at high speed.
Press and hold the reverse button (|◀◀) to reverse through a track at high speed.

Track search

Press the track up button (▶▶|) once to skip forward to the beginning of the next track.
Press the track down button (|◀◀) within a few seconds after playback begins to track down to the beginning of the previous track.
Press the track down button (|◀◀) after a few seconds have elapsed to start playback from the beginning of the current track.

Folder search

To change to the previous folder, press the folder down button (▼), or press the folder up button (▲) to advance to the next folder.

Music scan

This function scans the titles in a folder currently being played and plays 10 seconds of each song to aid you in finding a song you want to listen to.
Press and hold the scan button (**MEDIA**) during playback to start the scan play operation (the track number will flash).
Press and hold the scan button (**MEDIA**) again to cancel scan playback.

NOTE
If the unit is left in scan, normal playback will resume where scan was selected.

Repeat playback

Track repeat

1. Press the repeat button (1) during playback to play the current track repeatedly. "TRACK RPT" is displayed (♫ is displayed next to RPT at the bottom of the display area).
2. To cancel the repeat playback, press the button again after 3 seconds.

Folder repeat

1. Press the repeat button (1) during playback, and then press the button again within 3 seconds to play the tracks in the current folder repeatedly. "FOLDER RPT" is displayed (🗀 is displayed next to RPT at the bottom of the display area).
2. Press the button again to cancel the repeat playback.

Random playback

Tracks are randomly selected and played.

Folder random

1. Press the random button (2) during playback to play the tracks in the folder randomly. "FOLDER RDM" is displayed (🗀 is displayed next to RDM at the bottom of the display area).
2. To cancel the random playback, press the button again after 3 seconds.

All random

1. Press the random button (2) during playback, and then press the button again within 3 seconds to play the tracks in the USB device randomly. "ALL RDM" is displayed (⚂ is displayed next to RDM at the bottom of the display area).
2. Press the button again to cancel the random playback.

▼ Switching the display

The information displayed on the audio display changes as follows each time the text button (3) is pressed during playback.

Button	Information displayed on audio display
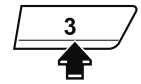	File number/Elapsed time
	Folder number/File number
	File name
	Folder name
	Album name
	Song name
	Artist name

NOTE

- *The information (artist name, music name) is displayed only when the USB device information in the USB device has information which can be displayed on the screen.*
- *This unit cannot display some characters. Characters which cannot be displayed are indicated by an asterisk (✱).*

Display scroll

Only 13 characters can be displayed at 1 time. To display the rest of the characters of a long title, press and hold the text button (3). The display scrolls the next 13 characters. Press and hold the text button (3) again after the last 13 characters have been displayed to return to the beginning of the title.

NOTE
The number of characters which can be displayed is restricted.

How to use iPod mode

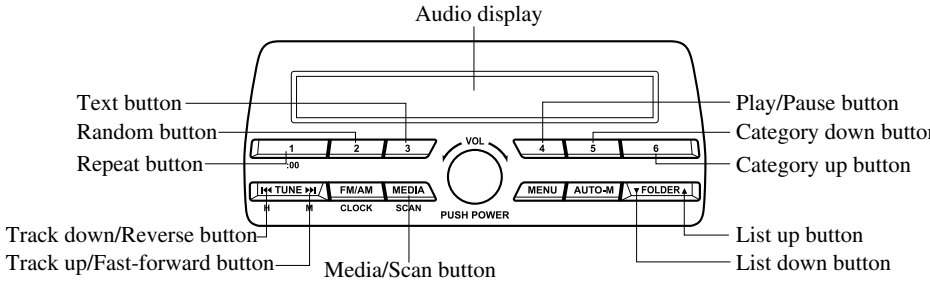

An iPod may not be compatible depending on the model or OS version. In this case, an error message is displayed.

NOTE
The iPod functions on the iPod cannot be operated while it is connected to the unit because the unit controls the iPod functions.

▼ Playback

1. Switch the ignition to ACC or ON.
2. Press the power/volume dial to turn the audio system on.
3. Press the media button (**MEDIA**) to switch to the iPod mode and start playback.

NOTE

- *When an iPod is not connected, the mode does not switch to the iPod mode.*
- *When there is no playable data in the iPod, "NO CONTENTS" is flashed.*
- *Do not remove the iPod while in the iPod mode. Otherwise, the data could be damaged.*

Pause

To stop playback, press the play/pause button (4).

Press the button again to resume playback.

Fast-forward/Reverse

Press and hold the fast-forward button (▶▶|) to advance through a track at high speed.
Press and hold the reverse button (|◀◀) to reverse through a track at high speed.

Track search

Press the track up button (▶▶|) once to skip forward to the beginning of the next track.
Press the track down button (|◀◀) within a few seconds (depends on iPod software version) after playback begins to track down to the beginning of the previous track.
Press the track down button (|◀◀) after a few seconds (depends on iPod software version) have elapsed to start playback from the beginning of the current track.

Category search

Press the category down button (5) to select the previous category and press the category up button (6) to select the next category.

NOTE
The types of categories include Playlist, Artist, Album, Song, Podcast, Genre, Composer, and Audio book.

List search

Press the list down button (▼) to select the previous list and press the list up button (▲) to select the next list.

NOTE
When the selected category is Song or Audio book, there is no list.

Music scan

This function scans the titles in a list currently being played and plays 10 seconds of each song to aid you in finding a song you want to listen to.
Press and hold the scan button (MEDIA) during playback to start the scan play operation (the track number will flash).
Press and hold the scan button (MEDIA) again to cancel scan playback.

NOTE
If the unit is left in scan, normal playback will resume where scan was selected.

Repeat playback

1. Press the repeat button (1) during playback to play the current track repeatedly. “TRACK RPT” is displayed (♫ is displayed next to RPT at the bottom of the display area).
2. Press the button again to cancel the repeat playback.

Random playback

Tracks are randomly selected and played.

Song random

1. Press the random button (2) during playback to play the tracks in the list randomly. “SONG RDM” is displayed (⚂ is displayed next to RDM at the bottom of the display area).
2. To cancel the random playback, press the button again after 3 seconds.

Album random

1. Press the random button (2) during playback, and then press the button again within 3 seconds to play the tracks in the iPod randomly. “ALBUM RDM” is displayed (🗀 is displayed next to RDM at the bottom of the display area).
2. Press the button again to cancel the random playback.

NOTE
The track number being played randomly is in the order of the iPod shuffle table.

▼ Switching the display

The information displayed on the audio display changes as follows each time the text button (3) is pressed during playback.

Button	Information displayed on audio display
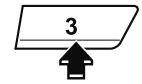	File number/Elapsed time
	File number
	Category name
	Artist name
	Album name
	Song name

NOTE

- *The information (artist name, music name) is displayed only when the iPod has information which can be displayed.*
- *This unit cannot display some characters. Characters which cannot be displayed are indicated by an asterisk (✱).*

Display scroll

13 characters can be displayed at 1 time. To display the rest of the characters of a long title, press and hold the text button (3). The display scrolls the next 13 characters. Press and hold the text button (3) again after the last 13 characters have been displayed to return to the beginning of the title.

NOTE
The number of characters which can be displayed is restricted.

Error Indications

If you see an error indication on the display, take appropriate action according to the following methods. If you cannot clear the error indication, take the vehicle to an Authorized Mazda Dealer.

CHECK USB

When the message “CHECK USB” is displayed, it indicates that there is some error in the USB device. Verify that the content recorded in the USB device has MP3/WMA/AAC files and re-connect correctly.

CHECK iPod

If the message “CHECK iPod” is displayed, it indicates that there is a malfunction in the iPod. Verify that the content recorded in the iPod has playable files and connect correctly.

Bluetooth®

▼ Introduction

Bluetooth® Hands-Free outline

When a Bluetooth® device (mobile phone) is connected to the vehicle's Bluetooth® unit, a call can be made or received by pressing the talk button, pick-up button, or hang-up button on the audio remote control switch. For example, even if a device (mobile phone) is in your coat pocket, a call can be made without taking the device (mobile phone) out and operating it directly.

Bluetooth® audio outline

When a portable audio unit equipped with the Bluetooth® communication function is paired to the vehicle, you can listen to music stored on the paired portable audio device from the vehicle's speakers. It is not necessary to connect the portable audio device to the vehicle's external input terminal. After programming, operate the vehicle audio control panel to play/stop the audio.

NOTE

- *For your safety, a device can be paired only when the vehicle is parked. If the vehicle starts to move, the pairing procedure will end. Park the vehicle in a safe place before pairing.*
- *The communication range of a Bluetooth® equipped device is about 10 meters (32 ft) or less.*
- *Basic audio operation is available using voice commands even if Bluetooth® is not connected.*

⚠ CAUTION

Some Bluetooth® mobile devices are not compatible with the vehicle. Consult an Authorized Mazda Dealer, Mazda's call center or Web support center for information regarding Bluetooth® mobile device compatibility:

➢ *U.S.A.*
Phone: 800-430-0153
Web: www.mazdausa.com/mazdaconnect

➢ *Canada*
Phone: 800-430-0153
Web: www.mazdahandsfree.ca

Audio Set [Type A (non-touchscreen)]

➢ *Mexico*
Center of Attention to Client (CAC)
Phone: 01-800-01-MAZDA
Web: www.mazdamexico.com.mx

Applicable Bluetooth® specification (Recommended)
Ver. 2.0

▼ Component Parts

Audio unit

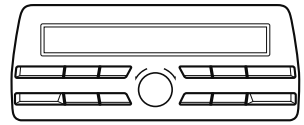

Talk button, Pick-up button and Hang-up button

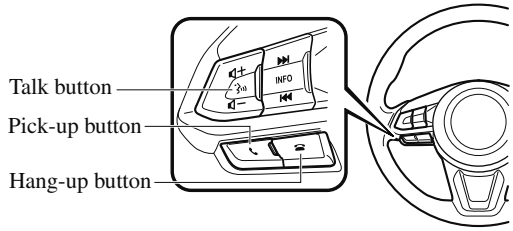

Microphone

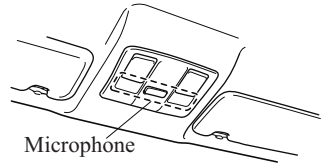

Microphone (hands-free)

The microphone is used for speaking voice commands or when making a Hands-free call.

Talk button

Activates the voice recognition. In addition, it skips the voice guidance.

Pick-up button

Responds to incoming calls. In addition, after selecting a contact or dialing a number, it places the call when the button is pressed.

Hang-up button

Ends the call or refuses an incoming call. In addition, it ends the voice recognition operation.

Volume adjustment

The power/volume dial of the audio unit is used to adjust the volume. Turn the dial to the right to increase volume, to the left to decrease it.
The volume can also be adjusted using the volume button on the steering wheel.

NOTE
If the volume is lower compared to other audio modes, increase the volume from the device side.

Bluetooth® Preparation

▼ Bluetooth® Hands-Free Preparation

Pairing code setting

The 4-digit pairing code setting for registration of your cell phone (pairing) can be set beforehand.

NOTE
The initial setting value is "0000".

1. Press the pick-up button or talk button with a short press.
2. **Say:** [Beep] "Setup"
3. **Prompt:** "Select one of the following: Pairing options, confirmation prompts, language, passcode, select phone or select music player."
4. **Say:** [Beep] "Pairing options"
5. **Prompt:** "Select one of the following: Pair, Edit, Delete, List, or Set Pairing Code."
6. **Say:** [Beep] "Set pairing code"
7. **Prompt:** "Your current pairing code is XXXX. Do you want to change it to a different pairing code?"
8. **Say:** [Beep] "Yes"
9. **Prompt:** "Please say a 4-digit pairing code."
10. **Say:** [Beep] "YYYY"
11. **Prompt:** "YYYY is this correct?"
12. **Say:** [Beep] "Yes" or "No"
13. If "Yes", go to Step 14. If "No", the procedure returns to Step 9.
14. **Prompt:** "Your new pairing code is YYYY. Use this pairing code when pairing devices to the Hands free system. Do you want to pair a device now?"
15. **Say:** [Beep] "Yes" or "No"
16. If "Yes", the system switches to the device registration mode. If "No", the system returns to standby status.

▼ Device pairing (Bluetooth® Hands-Free)

To use Bluetooth® Hands-Free, the device equipped with Bluetooth® has to be paired to the Bluetooth® unit using the following procedure.
A maximum of seven devices including hands-free mobile phones and Bluetooth® audio devices can be paired to one vehicle.

NOTE
If a Bluetooth® device has already been paired to the vehicle as a Bluetooth® audio device, it does not need to be paired again when using the device as a hands-free mobile phone. Conversely, it does not need to be paired again as a Bluetooth® audio device if it has already been paired as a hands-free mobile phone.

1. Activate the Bluetooth® application of the device.

   NOTE
   For the operation of the device, refer to its instruction manual.
2. Press the pick-up button or talk button with a short press.
3. **Say:** [Beep] "Setup"
4. **Prompt:** "Select one of the following: Pairing options, confirmation prompts, language, passcode, select phone or select music player."
5. **Say:** [Beep] "Pairing options"
6. **Prompt:** "Select one of the following: Pair, Edit, Delete, List, or Set Pairing Code."
7. **Say:** [Beep] "Pair"

8. **Prompt:** “Start the pairing process on your Bluetooth® device. Your pairing code is 0000 (XXXX). Input this on your Bluetooth® device when prompted on the device. See device manual for instructions.”
9. Using the device, perform a search for the Bluetooth® device (Peripheral device).

   NOTE
   For the operation of the device, refer to its instruction manual.
10. Select “Mazda” from the device list searched by the device.
11. Input the 4-digit pairing code to the device.
12. **Prompt:** “Please say the name of the device after the beep.”
13. **Say:** [Beep] “XXXX - - -” (Say a “device tag”, an arbitrary name for the device.) Example: “Stan's device.”

    NOTE
    Say a paired “device tag” within 10 seconds.
    If more than two devices are to be paired, they cannot be paired with the same or similar “device tag”.
14. **Prompt:** “XXXXXX - - - (Ex. “Stan's device”) (Device tag). Is this correct?”
15. **Say:** [Beep] “Yes”
16. **Prompt:** “Pairing complete”

After a device is registered, the system automatically identifies the device. By activating Bluetooth® Hands-Free again, or by activating Bluetooth® Hands-Free first after switching the ignition from OFF to ACC, the system reads out a voice guidance, “XXXXXX - - - (Ex. “Stan's device”) (Device tag) is connected”.

NOTE

- *When the pairing is completed, the ⊟ symbol is displayed.*
- *Some Bluetooth® audio devices need a certain amount of time before the ⊟ symbol is displayed.*
- *Device registration can also be done by operating the audio unit.*
- *Depending on the device, the registration status may be lost after a certain period of time. If this occurs, repeat the entire process from Step 1.*

Registered device read-out

Bluetooth® Hands-Free can read-out the devices registered to its system.

NOTE
Do this function only when parked. It is too distracting to attempt while driving and you may make too many errors to be effective.

1. Press the pick-up button or talk button with a short press.
2. **Say:** [Beep] “Setup”
3. **Prompt:** “Select one of the following: Pairing options, confirmation prompts, language, passcode, select phone or select music player.”
4. **Say:** [Beep] “Pairing options”
5. **Prompt:** “Select one of the following: Pair, Edit, Delete, List, or Set Pairing Code”
6. **Say:** [Beep] “List”

7. **Prompt:** “XXXXX..., XXXXX..., XXXXX... (Ex. Device A, device B, device C)” (The voice guidance reads out the device tags registered to the hands-free system.)

   Press the talk button with a short press during the read-out at the desired device, and then say one of the following voice commands to execute it.

   - “Select phone”: Selects device (Mobile phone) when the talk button is short-pressed.
   - “Select music player”: Selects device (Music player) when the talk button is short-pressed.
   - “Edit”: Edits device when the talk button is short-pressed.
   - “Continue”: Continues the list readout.
   - “Delete”: Deletes the registered device when the talk button is short-pressed.
   - “Previous”: Returns to the previous device in read-out when the talk button is short-pressed.
8. **Prompt:** “End of list, would you like to start from the beginning?”
9. **Say:** [Beep] “No”
10. **Prompt:** “Returning to main menu.”

▼ Device selection (Bluetooth® Hands-Free)

If several devices have been paired, the Bluetooth® unit links the device last paired. If you would like to link a different paired device, it is necessary to change the link. The order of device priority after the link has been changed is maintained even when the ignition is switched off.

(Hands-free phone)

1. Press the pick-up button or talk button with a short press.
2. **Say:** [Beep] “Setup”
3. **Prompt:** “Select one of the following: Pairing options, confirmation prompts, language, passcode, select phone or select music player.”
4. **Say:** [Beep] “Select phone”
5. **Prompt:** “Please say the name of the device you would like to select. Available devices are XXXXX... (Ex. device A), XXXXX... (Ex. device B), XXXXX... (Ex. device C). Which device please?”
6. **Say:** [Beep] “XXXXX... (Ex. Device B)”
7. **Prompt:** “XXXXX... (Ex. Device B). Is this correct?”
8. **Say:** [Beep] “Yes” or “No”
9. If “Yes”, go to Step 10. If “No”, the procedure returns to Step 5.
10. **Prompt:** “XXXXX... (Ex. Device B) selected.”

(Music player)

1. Press the pick-up button or talk button with a short press.
2. **Say:** [Beep] “Setup”
3. **Prompt:** “Select one of the following: Pairing options, confirmation prompts, language, passcode, select phone or select music player.”
4. **Say:** [Beep] “Select music player”
5. **Prompt:** “Please say the name of the device you would like to select. Available devices are XXXXX... (Ex. device A), XXXXX... (Ex. device B), XXXXX... (Ex. device C). Which device please?”

6. **Say:** [Beep] “XXXXX... (Ex. Device B)”
7. **Prompt:** “XXXXX... (Ex. Device B). Is this correct?”
8. **Say:** [Beep] “Yes” or “No”
9. If “Yes”, go to Step 10. If “No”, the procedure returns to Step 5.
10. **Prompt:** “XXXXX... (Ex. Device B) selected.”

NOTE

- *When the selected device connection is completed, the ☎ or ♪ symbol is displayed.*
- *Some Bluetooth® audio devices need a certain amount of time before the ☎ or ♪ symbol is displayed.*
- *Device (Music player) selection can also be done by operating the panel button.*

▼ Deleting a device (Bluetooth® Hands-Free)

Registered devices (Mobile phone) can be deleted individually or collectively.

NOTE
Do this function only when parked. It is too distracting to attempt while driving and you may make too many errors to be effective.

1. Press the pick-up button or talk button with a short press.
2. **Say:** [Beep] “Setup”
3. **Prompt:** “Select one of the following: Pairing options, confirmation prompts, language, passcode, select phone or select music player.”
4. **Say:** [Beep] “Pairing options”
5. **Prompt:** “Select one of the following: Pair, Edit, Delete, List, or Set Pairing Code.”

NOTE
A registered device (Mobile phone) can be deleted using the registration list.

6. **Say:** [Beep] “Delete”
7. **Prompt:** “Please say the name of the device you would like to delete. Available devices are XXXXX... (Ex. device A), XXXXX... (Ex. device B), XXXXX... (Ex. device C), or all. Which device please?”
8. **Say:** [Beep] “X” (Say the number of the device to be deleted.)

NOTE
Say “All” to delete all devices (Mobile phone).

9. **Prompt:** “Deleting XXXXX... (Ex. device B...) (Registered device tag). Is this correct?”
10. **Say:** [Beep] “Yes”
11. **Prompt:** “Deleted”

▼ Registered device editing (Bluetooth® Hands-Free)

1. Press the pick-up button or talk button with a short press.
2. **Say:** [Beep] “Setup”
3. **Prompt:** “Select one of the following: Pairing options, confirmation prompts, language, passcode, select phone or select music player.”
4. **Say:** [Beep] “Pairing options”
5. **Prompt:** “Select one of the following: Pair, Edit, Delete, List, or Set Pairing Code.”
6. **Say:** [Beep] “Edit”
7. **Prompt:** “Please say the name of the device you would like to edit. Available devices are XXXXX... (Ex. device A), XXXXX... (Ex. device B), XXXXX... (Ex. device C). Which device please?”

8. **Say:** [Beep] “X” (Say the number of the device to be edited.)
9. **Prompt:** “New name please?”
10. **Say:** [Beep] “XXXXX... (Ex. Device C)” (Speak a “device tag” an arbitrary name for the device.)
11. **Prompt:** “XXXXX... (Ex. device C) (Device tag), is this correct?”
12. **Say:** [Beep] “Yes”
13. **Prompt:** “New name saved.”

▼ Bluetooth® Audio Preparation

Bluetooth® audio device set-up

Bluetooth® audio pairing, changes, deletions, and display of paired device information can be performed.

1. The mode changes as follows each time the menu button (**MENU**) is pressed. Select “BT SETUP”.

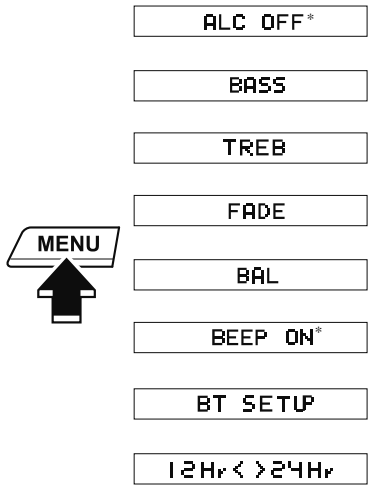

* Depending on the mode selected, the indication changes.

2. Turn the audio control dial and select a desired mode.

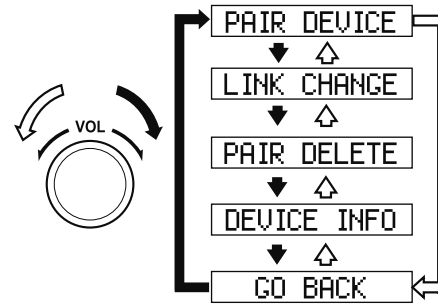

Display	Mode	Function
PAIR DEVICE	Pairing mode	Bluetooth® audio device pairing
LINK CHANGE	Link change mode	Changing link to Bluetooth® audio device
PAIR DELETE	Pairing deletion mode	Deleting link to Bluetooth® audio device
DEVICE INFO	Device information display mode	Displaying vehicle's Bluetooth® unit information

3. Press the audio control dial to determine the mode.

▼ Bluetooth® audio device pairing (Bluetooth® Audio)

Any Bluetooth® audio device must be paired to the vehicle's Bluetooth® unit before it can be listened to over the vehicle's speakers.
A maximum of seven devices including Bluetooth® audio devices and hands-free mobile phones can be paired to one vehicle.

NOTE

- *If a Bluetooth® device has already been paired to the vehicle as a hands-free mobile phone, it does not need to be paired again when using the device as a Bluetooth® audio device. Conversely, it does not need to be paired again as a hands-free mobile phone if it has already been paired as a Bluetooth® audio device.*
- *Device registration can also be done using voice recognition.*

Concerning the operation of a Bluetooth® audio device itself, refer to its instruction manual.
Some Bluetooth® audio devices have PIN codes (four digits). Refer to the audio device's instruction manual because the pairing procedure differs depending on whether it has a PIN code or not.

Pairing a Bluetooth® audio device which has a four-digit PIN code

1. Using the audio control dial, select the pairing mode “PAIR DEVICE” in the “BT SETUP” mode. (Refer to “Bluetooth® audio device set-up” for details.)
2. Press the audio control dial to determine the mode. After “ENTER PIN” is displayed on the audio display for three seconds, “PIN 0000” is displayed and the PIN code can be input.
3. Input the PIN code of your Bluetooth® audio device by pressing channel preset buttons 1 to 4 while “PIN 0000” is displayed.
   Press channel preset button 1 to input the first digit, 2 for the second, 3 for the third, and 4 for the forth. For example, if the PIN code were “4213” press channel preset button 1 four times (1, 2, 3, 4), button 2 twice (1, 2), button 3 once (1), and button 4 three times (1, 2, 3). If the “PIN 0000” display disappears before finishing the PIN code input, repeat the procedure from Step 1.

   NOTE
   Some devices accept only a particular pairing code (Usually, “0000” or “1234”).
   If pairing cannot be completed, refer to the owner's manual of your mobile device, and try those numbers if necessary.
4. Press the audio control dial while the input PIN code is displayed.
   “PAIRING” flashes on the audio display.
5. Operate the Bluetooth® audio device and set it to the pairing mode while “PAIRING” is flashing.
6. When the pairing is completed, ♪ and “PAIR SUCCESS” are displayed after about 10-30 seconds, after which “PAIR SUCCESS” continues to be displayed for three seconds, and then the unit returns to the normal display.

NOTE

- *Some Bluetooth® audio devices need a certain amount of time before the ♪ symbol is displayed.*
- *If the pairing failed, "Err" flashes for three seconds.*
- *Pairing cannot be performed while the vehicle is moving. If you attempt to perform pairing while the vehicle is moving, "PAIR DISABLE" is displayed.*
- *If seven Bluetooth® audio devices have already been paired to the vehicle, pairing cannot be performed and "MEMORY FULL" is displayed. Delete one paired device to pair another one.*

Pairing a Bluetooth® audio device which does not have a four-digit PIN code

1. Using the audio control dial, select the pairing mode "PAIR DEVICE" in the "BT SETUP" mode. (Refer to "Bluetooth® audio set up" for details.)
2. Press the audio control dial to determine the mode. After "ENTER PIN" is displayed on the audio display for three seconds, "PIN 0000" is displayed and the PIN code can be input.
3. Press the audio control dial while "PIN 0000" is displayed. "PAIRING" flashes on the audio display.
4. Operate the Bluetooth® audio device and set it to the pairing mode while "PAIRING" is flashing.
5. As the Bluetooth® audio device requires a PIN code, input "0000".
6. When the pairing is completed, ♪ and "PAIR SUCCESS" are displayed after about 10-30 seconds, after which "PAIR SUCCESS" continues to be displayed for three seconds, and then the unit returns to the normal display.

NOTE

- *If pairing cannot be completed, try "1234" instead. Refer to the owner's manual of your mobile device for the right PIN code.*
- *Some Bluetooth® audio devices need a certain amount of time before the ♪ symbol is displayed.*
- *If the pairing failed, "Err" flashes for three seconds.*
- *Pairing cannot be performed while the vehicle is moving. If you attempt to perform pairing while the vehicle is moving, "PAIR DISABLE" is displayed.*
- *If seven Bluetooth® audio devices have already been paired to the vehicle, pairing cannot be performed and "MEMORY FULL" is displayed. Delete one paired device to pair another one.*

▼ Device selection (Bluetooth® Audio)

If several devices have been paired, the Bluetooth® unit links the device last paired. If you would like to link a different paired device, it is necessary to change the link. The order of device priority after the link has been changed is maintained even when the ignition is switched off.

1. Using the audio control dial, select the link change mode “LINK CHANGE” in the “BT SETUP” mode. (Refer to “Bluetooth® audio device set-up” for details.)
2. Press the audio control dial to determine the mode.
3. The name of the currently linked Bluetooth® audio device is displayed. If no Bluetooth® audio device is currently linked, the name of the first device among the paired devices is displayed.
4. Turn the audio control dial to select the name of the device you would like to link.

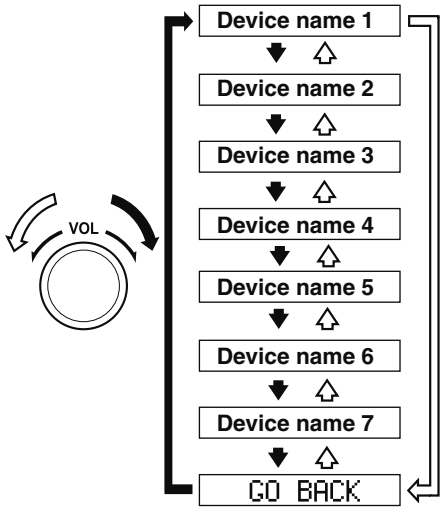

5. Press the audio control dial to select the device you would like to link. The ♪ symbol disappears, and “PAIRING” flashes in the audio display.

NOTE
When “GO BACK” is selected and the audio control dial is pressed, the display returns to “LINK CHANGE”.

6. If the link to the desired device is successful, the ♪ symbol is displayed again, together with “LINK CHANGED”. “LINK CHANGED” is displayed for three seconds, then it returns to the normal display.

NOTE

- *Some Bluetooth® audio devices need a certain amount of time before the ♪ symbol is displayed.*
- *If a hands-free type mobile phone has been the most recently paired device, the Bluetooth® unit links this device. If you would like to use a Bluetooth® audio type device which has been previously paired to the Bluetooth® unit, the link must be changed to this device.*
- *If an error occurs while trying to link a device, “Err” flashes in the audio display for three seconds, and the display returns to “LINK CHANGE”. If this occurs, check the pairing status of the Bluetooth® audio device and the location of the device in the vehicle (not in the luggage compartment or a metal-type box), and then try the link operation again.*
- *Device selection can also be done using voice recognition.*

How to confirm the device currently linked

Switch to the link-change mode. (Refer to "Changing the link to a Bluetooth® audio device")
The device name displayed first is the device which is currently linked.

▼ Deleting a device (Bluetooth® Audio)

1. Using the audio control dial, select the pairing delete mode "PAIR DELETE" in the "BT SETUP" mode. (Refer to "Bluetooth® audio device set-up" for details.)
2. Press the audio control dial to determine the mode.
3. The name of the first device among the paired devices is displayed.
4. Rotate the audio control dial and select the name of the paired device you would like to delete.

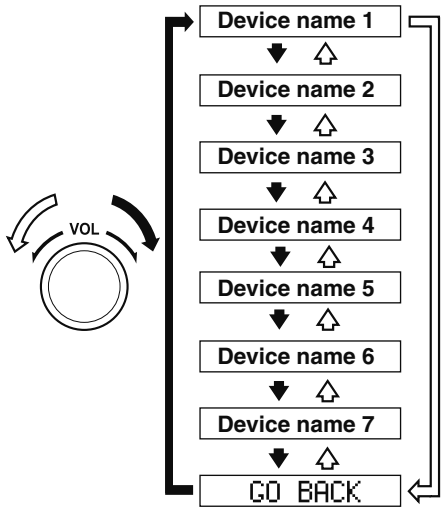

NOTE
Only the names of paired devices can be displayed. If only one device is paired, only the name for this device is displayed.

5. If a selection other than "GO BACK" is made and the audio control dial is pressed, "SURE ? NO" is displayed.
6. Rotate the audio control dial clockwise and switch the display to "SURE ? YES".

NOTE
The display changes as follows depending on whether the audio control dial is rotated clockwise or counterclockwise.
-Clockwise: "SURE ? YES" displayed
-Counterclockwise: "SURE ? NO" displayed

7. Press the audio control dial to delete the selected device.

NOTE
Select "GO BACK" and press the audio control dial to return to the "PAIR DELETE" display.

8. "PAIR DELETED" is displayed for 3 seconds after the deletion is completed, and then it returns to the normal display.

NOTE
If an error occurs while trying to delete the paired device, "Err" flashes in the display for 3 seconds and the display returns to "LINK DELETE".

▼ Bluetooth® audio device information display

1. Using the audio control dial, select the pair device information display mode “DEVICE INFO” in the “BT SETUP” mode. (Refer to “Bluetooth® audio device set-up” for details.)
2. Press the audio control dial to determine the mode.
3. The name of the Bluetooth® unit device is displayed.
4. Rotate the audio control dial to select the information for the Bluetooth® unit which you would like to view.

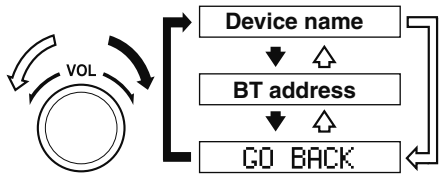

NOTE
When “GO BACK” is selected and the audio control dial is pressed, the display returns to “DEVICE INFO”.

Available Language

The available languages are English, Spanish, and Canadian French. If the language setting is changed, all of the voice guidance and voice input commands are done in the selected language.

NOTE

- *If the language setting is changed, device registration is maintained.*
- *Phonebook records are not cleared, but each language has a separate phonebook. Therefore, entries created in one language will need to be re-entered in the phonebook of the new language.*
- *Do these steps before you start driving. These less used functions are too distracting to undertake while driving until you are fully familiar with the system.*

(Method 1)

1. Press the pick-up button or talk button with a short press.
2. **Say:** [Beep] “Setup”
3. **Prompt:** “Select one of the following: Pairing options, confirmation prompts, language, passcode, select phone or select music player.”
4. **Say:** [Beep] “Language”
5. **Prompt:** “Select a language: English, French, or Spanish.”
6. **Say:** [Beep] “French” (Speak the desired language:“English”, “French” or “Spanish”)

   NOTE
   Other language settings can also be made while in the current setting by saying the name of the language in the native pronunciation.

7. **Prompt:** “French (Desired language) selected. Is this correct?”
8. **Say:** [Beep] “Yes”
9. **Prompt:** “French (Desired language) selected” (Spoken in the newly selected language).

(Method 2)

1. Press the pick-up button or talk button with a short press.
2. **Say:** [Beep] “French” (Say the desired language: “English”, “French” or “Spanish”). (Change the desired language by saying the language name.)

   NOTE
   Other language settings can also be made while in the current setting by saying the name of the language in the native pronunciation.
3. **Prompt:** “Would you like to change the language to French (Desired language)?”
4. **Say:** [Beep] “Yes”
5. **Prompt:** “Please wait. Switching to French phonebook. French selected” (Spoken in the newly selected language).

Security Setting

If a passcode is set, the system cannot be activated unless the passcode is input.

NOTE
Do this function only when parked. It is too distracting to attempt while driving and you may make too many errors to be effective.

Passcode setting

1. Press the pick-up button or talk button with a short press.
2. **Say:** [Beep] “Setup”
3. **Prompt:** “Select one of the following: Pairing options, confirmation prompts, language, passcode, select phone or select music player.”
4. **Say:** [Beep] “Passcode”
5. **Prompt:** “Passcode is disabled. Would you like to enable it?”
6. **Say:** [Beep] “Yes”
7. **Prompt:** “Please say a 4-digit passcode. Remember this passcode. It will be required to use this system.”
8. **Say:** [Beep] “XXXX” (Say a desired 4-digit passcode, “PCode”.)
9. **Prompt:**“Passcode XXXX (Passcode, PCode). Is this correct?”
10. **Say:** [Beep] “Yes”
11. **Prompt:**“Passcode is enabled.”

Using Bluetooth® Hands-Free with a passcode

1. Press the pick-up button or talk button with a short press.
2. **Prompt:** “Hands-Free system is locked. State the passcode to continue.”
3. **Say:** [Beep] “XXXX” (Say the set passcode “PCode”.)
4. If the correct passcode is input, voice guidance “XXXXXX... (Ex. “Mary's device”) (Device tag) is connected” is announced.
   If the passcode is incorrect, voice guidance “XXXX (4-digit passcode, Pcode) incorrect passcode, please try again” is announced.

Canceling the passcode

NOTE
Do this function only when parked. It is too distracting to attempt while driving and you may make too many errors to be effective.

1. Press the pick-up button or talk button with a short press.
2. **Say:** [Beep] “Setup”
3. **Prompt:** “Select one of the following: Pairing options, confirmation prompts, language, passcode, select phone or select music player.”
4. **Say:** [Beep] “Passcode”
5. **Prompt:**“Passcode is enabled. Would you like to disable it?”
6. **Say:** [Beep] “Yes”
7. **Prompt:**“Passcode is disabled.”

Confirmation Prompts

The confirmation prompt confirms the command content to the user before advancing to the operation requested by the user. When this function is turned on, the system reads out the voice input command previously received and confirms whether the command is correct before advancing to the command execution.
When the confirmation prompt function is turned on:
(Ex. “Calling John's device. Is this correct?”)
When the confirmation prompt function is turned off:
(Ex. “Calling John's device.”)

NOTE
If the confirmation prompt function is turned off when making an emergency call, the system reads out and confirms the command before executing it.

1. Press the pick-up button or talk button with a short press.
2. **Say:** [Beep] “Setup”
3. **Prompt:** “Select one of the following: Pairing options, confirmation prompts, language, passcode, select phone or select music player.”
4. **Say:** [Beep] “Confirmation prompts”
5. **Prompt:** “Confirmation prompts are on/off. Would you like to turn confirmation prompts off/on?”
6. **Say:** [Beep] “Yes”
7. **Prompt:** “Confirmation prompts are off/on.”

Bluetooth® Audio

Applicable Bluetooth® specification (Recommended)
Ver. 2.0

Response profile

- A2DP (Advanced Audio Distribution Profile) Ver. 1.0
- AVRCP (Audio/Video Remote Control Profile) Ver. 1.0/1.3

A2DP is a profile which transmits only audio to the Bluetooth® unit. If your Bluetooth® audio device corresponds only to A2DP, but not AVRCP, you cannot operate it using the control panel of the vehicle's audio system. In this case, only the operations on the mobile device are available the same as when a portable audio device for a non-compliant Bluetooth® device is connected to the AUX terminal.

Function	A2DP	AVRCP	
		Ver. 1.0	Ver. 1.3
Playback	—	X	X
Pause	—	X	X
File (Track) up/down	—	X	X
Reverse	—	—	X
Fast-forward	—	—	X
Text display	—	—	X

X: Available
—: Not available

NOTE

- *The battery consumption of Bluetooth® audio devices increases while Bluetooth® is connected.*
- *If a general mobile phone device is USB connected during music playback over the Bluetooth® connection, the Bluetooth® connection is disconnected. For this reason, you cannot have music playback over a Bluetooth® connection and music playback using a USB connection at the same time.*
- *The system may not operate normally depending on the Bluetooth® audio device.*

▼ Switching to Bluetooth® audio mode

To listen to music or voice audio recorded to a Bluetooth® audio device, switch to the Bluetooth® audio mode to operate the audio device using the audio system control panel. Any Bluetooth® audio device must be paired to the vehicle's Bluetooth® unit before it can be used. Refer to Bluetooth® Preparation (Type A) on page 5-34.

1. Turn on the Bluetooth® audio device's power.
2. Switch the ignition to ACC or ON. Make sure that the "♪" symbol is displayed in the audio display. The symbol is not displayed if an un-paired Bluetooth® audio device is being used or the vehicle's Bluetooth® unit has a malfunction.

   NOTE
   Some Bluetooth® audio devices need a certain amount of time before the "♪" symbol is displayed.
3. Press the media button (MEDIA) to switch to the Bluetooth® audio mode and start playback.

If the current device version is lower than AVRCP Ver. 1.3: “BT Audio” is displayed.
If the current device is AVRCP Ver. 1.3: The playback time is displayed.

NOTE

- *If the Bluetooth® audio device does not begin playback, press the Play/Pause button (4).*
- *If a call is received on a hands-free mobile phone during playback from the Bluetooth® audio device, the playback is stopped. Playback from the Bluetooth® audio device resumes after the call ends.*

▼ Playback

1. To listen to a Bluetooth® audio device over the vehicle's speaker system, switch the mode to Bluetooth® audio mode. (Refer to “Switching to Bluetooth® audio mode”)
2. To stop playback, press the Play/Pause button (4).
3. Press the button again to resume playback.

Selecting a file (track)

Selects the next file (track)

Short-press the track up button (⏭).

Selects the beginning of the current file (track)

Short-press the track down button (⏮).

Fast-forward/Reverse (AVRCP Ver. 1.3)

Fast-forward

Press and hold the fast-forward button (⏭).

Reverse

Press and hold the reverse down button (⏮).

▼ Switching the display (only AVRCP Ver. 1.3)

The information displayed on the audio display changes as follows each time the text button (3) is pressed during playback.

Button	Information displayed on audio display
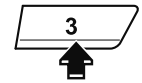	Elapsed time
	Album name
	Song name
	Artist name

NOTE

- *If title information is not available, “NO TITLE” is displayed.*
- *This unit cannot display some characters. Characters which cannot be displayed are indicated by an asterisk (✱).*

Display scroll

Only 13 characters can be displayed at 1 time. To display the rest of the characters of a long title, press and hold the text button (3). The display scrolls the next 13 characters. Press and hold the text button (3) again after the last 13 characters have been displayed to return to the beginning of the title.

▼ Bluetooth® audio device information display

If a Bluetooth® audio device is connected, the following information is displayed in the audio display.

Category	AVRCP Ver. lower than 1.3	AVRCP Ver. 1.3
Device name	X	X
Title	—	X
Artist name	—	X
Album name	—	X
File number	—	X
Playback time	—	X
Folder number	—	—

X: Available
—: Not available

NOTE
Some information may not display depending on the device, and if the information cannot be displayed, "NO TITLE" is indicated.

Bluetooth® Hands-Free

▼ Making a Call

Phonebook Usage

Telephone calls can be made by saying the name of a person (voice tag) whose phone number has been registered in Bluetooth® Hands-Free in advance. Refer to Phonebook registration.

1. Press the pick-up button or talk button with a short press.
2. **Say:** [Beep] "Call"
3. **Prompt:** "Name please."
4. **Say:** [Beep] "XXXXX... (Ex. "John's phone")" (Say a voice tag registered in the phonebook.)
5. **Prompt:** "Calling XXXXX... (Ex. "John's phone") XXXX (Ex. "at home"). Is this correct?" (Voice tag and phone number location registered in phonebook).
6. **Say:** [Beep] "Yes"
7. **Prompt:** "Dialing"

NOTE
The "Call" command and the voice tag can be combined.
Ex. In Step 2, say, "Call John's phone", then, Steps 3 and 4 can be skipped.

Phonebook registration

Phone numbers can be registered to the Bluetooth® Hands-Free phonebook.

NOTE
Do this function only when parked. It is too distracting to attempt while driving and you may make too many errors to be effective.

1. Press the pick-up button or talk button with a short press.

2. **Say:** [Beep] “Phonebook”
3. **Prompt:** “Select one of the following: New entry, edit, list names, delete, erase all or import contact.”
4. **Say:** [Beep] “New entry”
5. **Prompt:** “Name please.”
6. **Say:** [Beep] “XXXXX... (Ex. “Mary's phone”)” (Say a voice tag for the name registered.)
7. **Prompt:** “Adding XXXXX... (Ex. “Mary's phone”) (Registered voice tag). Is this correct?”
8. **Say:** [Beep] “Yes”
9. **Prompt:** “Home, Work, Mobile, or Other?”
10. **Say:** [Beep] “Mobile” (Say “Home” , “Work”, “Mobile”, or “Other”, for the desired location to be registered.)
11. **Prompt:** “Mobile (Location to be registered). Is this correct?”
12. **Say:** [Beep] “Yes”
13. **Prompt:** “Number, please.”
14. **Say:** [Beep] “XXXXXXXXXXX” (Say the phone number to be registered.)
15. **Prompt:** “XXXXXXXXXXX (Phone number registration). After the beep, continue to add numbers, or say Go-Back to re-enter the last entered numbers, or press the Pick-Up button to save the number.”
16. **(Registration)**
    Press the pick-up button or say “Enter”, then go to Step 17.
    (Adding/inputting telephone number)
    Say, “XXXX” (desired telephone number), then go to Step 15.
    (Telephone number correction)
    Say, “Go Back”. The prompt replies, “Go Back. The last entered numbers have been removed.”. Then go back to Step 13.
17. **Prompt:** “Number saved. Would you like to add another number for this entry?”
18. **Say:** [Beep] “Yes” or “No”.
19. If “Yes”, an additional phone number registration can be made for the same entry.
    If “No”, the system returns to standby status.

(Import contact)

Phonebook data from your device (Mobile phone) can be sent and registered to your Bluetooth® Hands-Free phonebook using Bluetooth®.

1. Press the pick-up button or talk button with a short press.
2. **Say:** [Beep] “Phonebook”
3. **Prompt:** “Select one of the following: New entry, edit, list names, delete, erase all or import contact.”
4. **Say:** [Beep] “Import contact”
5. **Prompt:** “The hands free System is ready to receive a contact from a phone. Only a home, a work, and a mobile number can be imported, This process requires operation of a mobile phone. refer to the phone's manual for more information”
6. Device (Mobile phone) operation: Select one entry from the phonebook and send it using Bluetooth®.
7. **Prompt:** “X (Number of locations which include data) numbers have been imported. What name would you like to use for these numbers?”

8. **Say:** [Beep] “XXXXX... (Ex. “Mary's phone”)” (Say a voice tag for the name registered.)
9. **Prompt:** “Adding XXXXX... (Ex. “Mary's phone”) (Voice tag). Is this correct?”
10. **Say:** [Beep] “Yes”
11. **Prompt:** “Number saved. Would you like to import another contact?”
12. **Say:** [Beep] “Yes” or “No”
13. If “Yes”, the procedure proceeds to Step 5.
    If “No”, the system returns to standby status.

Editing phonebook

The data registered to the Bluetooth® Hands-Free phonebook can be edited.

NOTE
Do this function only when parked. It is too distracting to attempt while driving and you may make too many errors to be effective.

1. Press the pick-up button or talk button with a short press.
2. **Say:** [Beep] “Phonebook”
3. **Prompt:** “Select one of the following: New entry, edit, list names, delete, erase all or import contact.”
4. **Say:** [Beep] “Edit”
5. **Prompt:** “Please say the name of the entry you would like to edit or say, “List names”.”
6. **Say:** [Beep] “XXXXX... (Ex. “Mary's phone”)” (Say the voice tag for the registered name to be edited in the phonebook.)
7. **Prompt:** “Home, Work, Mobile, or Other?”
8. **Say:** [Beep] “Home” (Say the registered location to be edited: “Home”, “Work”, “Mobile”, or “Other”.)
9. **Prompt:** “XXXXX... (Ex. “Mary's phone”) (Registered voice tag) XXXX (Ex. “Home”) (Registered location). Is this correct?”
10. **Say:** [Beep] “Yes”
11. **Prompt:** “The current number is XXXXXXXXXXX (Ex. “555-1234”) (Currently registered number). New number, please.”

    NOTE
    If there was no previous phone number registered to a location (Ex. “Work”), the prompt will only read out “Number, please”
12. **Say:** [Beep] “XXXXXXXXXXX (Ex. “555-5678”)” (Say the new phone number to be registered.)
13. **Prompt:** “XXXXXXXX (Telephone number) After the beep, continue to add numbers, or say Go-Back to re-enter the last entered numbers, or press the Pick-Up button to save the number.”
14. **(Number Change)**
    Press the pick-up button, then go to Step 15.
    (Adding/inputting telephone number)
    Say, “XXXX” (desired telephone number), then go to Step 13.

(Telephone number correction)
Say, “Go Back”. The prompt replies, “Go Back. The last entered numbers have been removed. Number, please.”. Then go back to Step 12.

15. **Prompt:** “Number changed.”

Phonebook data deletion

(Erasing individual phonebook data)

Individual data registered to the Bluetooth® Hands-Free phonebook can be cleared.

NOTE
Do this function only when parked. It is too distracting to attempt while driving and you may make too many errors to be effective.

1. Press the pick-up button or talk button with a short press.
2. **Say:** [Beep] “Phonebook”
3. **Prompt:** “Select one of the following: New entry, edit, list names, delete, erase all or import contact.”
4. **Say:** [Beep] “Delete”
5. **Prompt:** “Please say the name of the entry you would like to delete or say, “List names”. ”
6. **Say:** [Beep] “XXXXX... (Ex. “John's phone”) ” (Say the registered voice tag to be deleted from the phonebook.)
7. **Prompt:** “Deleting XXXXX... (Ex. “John's phone”) (Registered voice tag) Home (Registered location). Is this correct?”
8. **Say:** [Beep] “Yes”
9. **Prompt:** “XXXXX... (Ex. “John's phone”) (Registered voice tag) Home (Registered location) deleted.”

(Complete deletion of the phonebook data)

All data registered to the Bluetooth® Hands-Free phonebook can be erased.

NOTE
Do this function only when parked. It is too distracting to attempt while driving and you may make too many errors to be effective.

1. Press the pick-up button or talk button with a short press.
2. **Say:** [Beep] “Phonebook”
3. **Prompt:** “Select one of the following: New entry, edit, list names, delete, erase all or import contact.”
4. **Say:** [Beep] “Erase all”
5. **Prompt:** “Are you sure you want to erase everything from your Hands Free system phonebook?”
6. **Say:** [Beep] “Yes”
7. **Prompt:** “You are about to delete everything from your Hands Free system phonebook. Do you want to continue?”
8. **Say:** [Beep] “Yes”
9. **Prompt:** “Please wait, erasing the Hands Free system phonebook.”
10. **Prompt:** “Hands-Free system phonebook erased.”

Read-out of names registered to the Bluetooth® Hands-Free phonebook

Bluetooth® Hands-Free can read out the list of names registered to its phonebook.

1. Press the pick-up button or talk button with a short press.
2. **Say:** [Beep] “Phonebook”
3. **Prompt:** “Select one of the following: New entry, edit, list names, delete, erase all or import contact.”
4. **Say:** [Beep] “List names”
5. **Prompt:** “XXXXX..., XXXXX..., XXXXX... (Ex. “John's phone”, Mary's phone, Bill's phone)” (Voice guidance reads out the voice tags registered to the phonebook.)
   Press the talk button with a short press during the read-out at the desired name, and then say one of the following voice commands to execute it.
   - “Continue”: Continues the list readout.
   - “Call”: Calls the registered phonebook data when the talk button is short-pressed.
   - “Edit”: Edits the registered phonebook data when the talk button is short-pressed.
   - “Delete”: Deletes the registered phonebook data when the talk button is short-pressed.
   - “Previous”: Returns to the previous phonebook data in read-out when the talk button is short-pressed.
6. **Prompt:** “End of list, would you like to start from the beginning?”
7. **Say:** [Beep] “No”
8. The procedure returns to Step 3.

Redial Function

Redialing the number of the person previously dialed using the phone is possible.

1. Press the pick-up button or talk button with a short press.
2. **Say:** [Beep] “Redial”
3. **Prompt:** “Dialing”

Telephone Number Input

NOTE
Practice this while parked until you are confident you can do it while driving in a non-taxing road situation. If you are not completely comfortable, make all calls from a safe parking position, and only start driving when you can devote your full attention to driving.

1. Press the pick-up button or talk button with a short press.
2. **Say:** [Beep] “Dial”
3. **Prompt:** “Number, please”
4. **Say:** [Beep] “XXXXXXXXXXX (Telephone number)”
5. **Prompt:** “XXXXXXXXXXX. (Telephone number) After the beep, continue to add numbers, or say Go-Back to re-enter the last entered numbers, or press the Pick-Up button to execute dialing.”
6. **(Dialing)**
   Press the pick-up button or say “Dial”, then go to Step 7.
   (Adding/inputting telephone number)
   Say, “XXXX” (desired telephone number), then go to Step 5.

(Telephone number correction)
Say, “Go Back”. The prompt replies, “Go Back. The last entered numbers have been removed.”. Then go back to Step 3.

7. **Prompt:** “Dialing”

NOTE
The “Dial” command and a telephone number can be combined.
Ex. In Step 2, say, “Dial 123-4567” then, Steps 3 and 4 can be skipped.

Emergency calls

A call can be made to the emergency phone number (911: U.S.A./Canada, 066: Mexico) using the voice input command. It may not function properly in some areas in Mexico.

1. Press the pick-up button or talk button with a short press.
2. **Say:** [Beep] “Emergency”
3. **- U.S.A./Canada vehicles - Prompt:** “Dialing “911”, is this correct?”
   - Mexico vehicles - Prompt: “Dialing “066”, is this correct?”
4. **Say:** [Beep] “Yes”
5. **Prompt:** “Dialing”

▼ Receiving an Incoming Call

1. **Prompt:** “Incoming call, press the pick-up button to answer”
2. To accept the call, press the pick-up button.
   To reject the call, press the hang-up button.

▼ Hanging Up a Call

Press the hang-up button during the call. A beep sound will confirm that call is ended.

▼ Mute

The microphone can be muted during a call.

1. Press the talk button with a short press.
2. **Say:** [Beep] “Mute”
3. **Prompt:**“Microphone muted”

Canceling mute

1. Press the talk button with a short press.
2. **Say:** [Beep] “Mute off”
3. **Prompt:**“Microphone unmuted”

▼ Transferring a Call from Hands-Free to a Device (Mobile Phone)

Communication between the hands-free unit and a device (Mobile phone) is canceled, and the line can be switched to a standard call using a device (Mobile phone).

1. Press the talk button with a short press.
2. **Say:** [Beep] “Transfer call”
3. **Prompt:**“Transferred call to phone”

▼ Transferring a Call from a Device (Mobile Phone) to Hands-Free

Communication between devices (Mobile phone) can be switched to Bluetooth® Hands-Free.

1. Press the talk button with a short press.
2. **Say:** [Beep] “Transfer call”
3. **Prompt:**“Transferred call to Hands Free system”

▼ Call interrupt

A call can be interrupted to receive an incoming call from a third party.
Switch to a new incoming call using the following methods.

(Method 1)

1. Press the pick-up button.
2. **Prompt:** “Swapping calls.”

(Method 2)

1. Press the talk button with a short press.
2. **Say:** [Beep] “Swap calls”
3. **Prompt:** “Swapping calls.”

NOTE

- *To refuse an incoming call, press the hang-up button.*
- *After receiving a new incoming call, the previous call is placed on hold.*

Switching calls

Switching back to the previous call can also be done.

Method 1

1. Press the pick-up button.
2. **Prompt:** “Swapping calls.”

Method 2

1. Press the talk button with a short press.
2. **Say:** [Beep] “Swap calls”
3. **Prompt:** “Swapping calls.”

Three-way call function

1. Press the talk button with a short press.
2. **Say:** [Beep] “Join calls”
3. **Prompt:** “Joining calls”

Making a call using a telephone number

1. Press the talk button with a short press.
2. **Say:** [Beep] “Dial”
3. **Prompt:** “Number, please”
4. **Say:** [Beep] “XXXXXXXXXXX (Telephone number)”
5. **Prompt:** “XXXXXXXXXXX. (Telephone number) After the beep, continue to add numbers, or say Go-Back to re-enter the last entered numbers, or press the Pick-Up button to execute dialing.”
6. **(Dialing)**
   Press the pick-up button or say “Dial”, then go to Step 7.
   (Adding/inputting telephone number)
   Say, “XXXX” (desired telephone number), then go to Step 5.
   (Telephone number correction)
   Say, “Go Back”. The prompt replies, “Go Back. The last entered numbers have been removed.”. Then go back to Step 3.
7. **Prompt:** “Dialing”

Making calls using the phonebook

1. Press the talk button with a short press.
2. **Say:** [Beep] “Call”
3. **Prompt:** “Name please.”
4. **Say:** [Beep] “XXXXX... (Ex. “John's phone”)” (Say a voice tag registered in the phonebook.)
5. **Prompt:** “Calling XXXXX... (Ex. “John's phone”) XXXX (Ex. “at home”). Is this correct?” (Voice tag and phone number location registered in phonebook).
6. **Say:** [Beep] “Yes”
7. **Prompt:** “Dialing”

Redialing function

1. Press the talk button with a short press.
2. **Say:** [Beep] “Redial”
3. **Prompt:** “Dialing”

Ending the current call

Press the hang-up button during the call.

▼ DTMF (Dual Tone Multi-Frequency Signal) Transmission

This function is used when transmitting DTMF via the user's voice. The receiver of a DTMF transmission is generally a home telephone answering machine or a company's automated guidance call center (When you send tone signals back according to the voice guidance recording).

1. Press the talk button with a short press.
2. **Say:** [Beep] “XXXX... send” (Say DTMF code)
3. **Prompt:**“Sending XXXX... (DTMF code)”

Voice Recognition

In this section, the basic operation of the voice recognition is explained.

Activating Voice Recognition

To Activate the Main Menu: Press the pick-up button or talk button with a short press.

Ending Voice Recognition

Use one of the following methods:

- Press and hold the talk-button.
- Press the hang-up button.

Skipping Voice Guidance (for faster operation)

Press and release the talk-button.

NOTE

- *The Bluetooth® Hands-Free system is operable several seconds after the ignition is switched to ACC or ON (requires less than 15 seconds).*
- *When operating the audio unit or the A/C while using Bluetooth® Hands-Free, the beep sounds or voice guidance (audio unit)/cannot be heard.*

Tutorial

The tutorial explains how to use Bluetooth® Hands-Free.
To activate the tutorial, do the following:

1. Press the pick-up button or talk button with a short press.
2. **Say:** [Beep] “Tutorial”
3. Follow the prompts to receive the appropriate voice guidance instructions.

Commands useable anytime during voice recognition

“Help” or “Go Back” are commands which can be used at anytime during voice recognition.

Help function use

The help function informs the user of all the available voice commands under the current conditions.

1. **Say:** [Beep] “Help”
2. Follow the prompts to receive the appropriate voice guidance instructions.

Returning to previous operation

This command is for returning to the previous operation while in the voice recognition mode.
Say: [Beep] “Go Back”

To prevent a deterioration in the voice recognition rate and voice quality, the following points should be observed:

- **The voice recognition cannot be performed while voice guidance or the beep sound is operating. Wait until the voice guidance or the beep sound is finished before saying your commands.**
- Dialects or different wording other than hands-free prompts cannot be recognized by voice recognition. Speak in the wording specified by the voice commands.
- It is not necessary to face the microphone or approach it. Speak the voice commands while maintaining a safe driving position.
- Do not speak too slow or too loud.

- Speak clearly, without pausing between words or numbers.
- Close the windows and/or the moonroof to reduce loud noises from outside the vehicle, or turn down the airflow of the climate control system while Bluetooth® Hands-Free is being used.
- Make sure the vents are not directing air up towards the microphone.

NOTE
If the voice recognition performance is not satisfactory.
Refer to Voice Recognition Learning Function (Speaker Enrollment) (Type A) on page 5-57.
Refer to Troubleshooting on page 5-60.

Voice Recognition Learning Function (Speaker Enrollment)

The voice recognition learning function enables voice recognition appropriate to the characteristics of the user's voice. If the recognition of the voice input commands to the system is not adequate, this function can largely improve the system's voice recognition of the user. If your voice can be recognized sufficiently without using this function, you may not realize the added benefit of the function. To register your voice, the voice input command list must be read out. Read out the list when the vehicle is parked. Perform the registration in as quiet a place as possible (page 5-56). The registration must be performed completely. The required time is a few minutes. The user needs to be seated in the driver's seat with the voice input command list for voice recognition learning visible.

▼ When voice recognition learning is done for the first time

1. Press the pick-up button or talk button with a short press.
2. **Say:** [Beep] “Voice training”
3. **Prompt:** “This operation must be performed in a quiet environment while the vehicle is stopped. See the owner's manual for the list of required training phrases. Press and release the talk button when you are ready to begin. Press the hang-up button to cancel at any time.”
4. Press the talk button with a short press.

5. The voice guidance reads out the voice input command number (refer to the voice input command list for voice recognition learning). (Ex. “Please read phrase 1”)
6. **Say:** [Beep] “0123456789” (Say the voice input command for voice recognition learning (1 to 8) according to the voice guidance.)
7. **Prompt:** “Speaker enrollment is complete.”

NOTE
If an error occurred in the voice recognition learning, re-learning can be done by pressing the talk button with a short press.

▼ Voice recognition re-learning

If voice recognition learning has already been done.
1. Press the pick-up button or talk button with a short press.
2. **Say:** [Beep] “Voice training”
3. **Prompt:** “Enrollment is enabled/ disabled. Would you like to disable/ enable or retrain?”
4. **Say:** [Beep] “Retrain”
5. **Prompt:** “This operation must be performed in a quiet environment while the vehicle is stopped. See the owner's manual for the list of required training phrases. Press and release the talk button when you are ready to begin. Press the hang-up button to cancel at any time.”
6. Press the talk button with a short press.
7. The voice guidance reads out the voice input command number (refer to the voice input command list for voice recognition learning). (Ex. “Please read phrase 1”)
8. **Say:** [Beep] “0123456789” (Say the voice input command for voice recognition learning (1 to 8) according to the voice guidance.)
9. **Prompt:** “Speaker enrollment is complete.”

NOTE
If an error occurred in the voice recognition learning, re-learning can be done by pressing the talk button with a short press.

Voice input command list for voice recognition learning

When reading out, the following points must be observed:

- Read out the numbers one at a time correctly and naturally.
  (For example, “1234” must be read out “one, two, three, four” not “twelve, thirty four”.)
- Do not read out parentheses. “(” and hyphens “-” are used for separating numbers in a phone number.

Ex.
“(888) 555-1212” must be spoken “Eight, eight, eight, five, five, five, one, two, one, two.”

Phrase	Command
1	0123456789
2	(888) 555-1212
3	Call
4	Dial
5	Setup
6	Cancel
7	Continue
8	Help

NOTE

- *The applicable phrase appears in the audio display.*
- *After user voice registration is completed, voice guidance "Speaker enrollment is complete" is announced.*

Voice recognition learning on/off

1. Press the pick-up button or talk button with a short press.
2. **Say:** [Beep] "Voice training"
3. **Prompt:** "Enrollment is enabled/disabled. Would you like to disable/enable or retrain?"
4. **Say:** [Beep] "Disable" or "Enable"
5. When "Disable" is spoken, the voice recognition learning is turned off. When "Enable" is spoken, the voice recognition learning is turned on.
6. **Prompt:** "Speaker Enrollment is disabled/enabled."

Troubleshooting

Mazda Bluetooth® Hands-Free Customer Service

If you have any problems with Bluetooth®, contact our toll-free customer service center.

- **U.S.A.**
  Phone: 800-430-0153 (Toll-free)
  Web: www.mazdausa.com/mazdaconnect
- **Canada**
  Phone: 800-430-0153 (Toll-free)
  Web: www.mazdahandsfree.ca
- **Mexico**
  Center of Attention to Client (CAC)
  Phone: 01-800-01-MAZDA (Toll-free)
  Web: www.mazdamexico.com.mx

Bluetooth® Device pairing, connection problems

Symptom	Cause	Solution method
Unable to perform pairing	—	First make sure the device is compatible with the Bluetooth® unit, and then check whether the Bluetooth® function and the Find Mode/Visible setting*1 on the device are turned on. If pairing is still not possible after this, contact an Authorized Mazda Dealer or Mazda Bluetooth® Hands-Free Customer Service.
Pairing cannot be performed again	The pairing information paired to the Bluetooth® unit or device is not recognized correctly.	Perform pairing using the following procedure. •Clear “Mazda” stored in the device. •Perform pairing again.
Unable to perform pairing	The Bluetooth® function and the Find Mode/Visible setting*1 on the device may turn off automatically after a period of time has elapsed depending on the device.	Check whether the Bluetooth® function and the Find Mode/Visible setting*1 on the device are turned on and pairing or reconnect.
Does not connect automatically when starting the engine		
Automatically connects, but then disconnects suddenly		
Disconnects intermittently	The device is in a location in which radio wave interference can occur easily, such as inside a bag in a rear seat, in a rear pocket of a pair of pants.	Move the device to a location in which radio wave interference is less likely to occur.

Symptom	Cause	Solution method
Does not connect automatically when starting the engine	The pairing information is updated when the device OS is updated.	Perform pairing again.

*1 Setting which detects the existence of a device external to the Bluetooth® unit.

NOTE

- *When the OS of the device is updated, the pairing information may be deleted. If this happens, reprogram the pairing information to the Bluetooth® unit.*
- *If you pair your phone which has already been paired to your vehicle more than once in the past, you need to delete "Mazda" on your mobile device. Then, execute the Bluetooth® search on your mobile device once again, and pair to a newly detected "Mazda".*
- *Before you pair your device, make sure that Bluetooth® is "ON", both on your phone and on the vehicle.*
- *If Bluetooth®-enabled devices are used in the following locations or conditions, connection via Bluetooth® may not be possible.*
  - *The device is in a location hidden from the unit such as behind or under a seat, or inside the glove compartment.*
  - *The device contacts or is covered by a metal object or body.*
  - *The device is set to power-saving mode.*
- *Different Bluetooth®-enabled devices can be used for Bluetooth® Hands-Free and Bluetooth® audio. For example, device A can be connected as a Bluetooth® Hands-Free device and device B can be connected as a Bluetooth® audio device. However, the following may occur when they are used at the same time.*
  - *The Bluetooth® connection of the device is disconnected.*
  - *Noise occurs in the Hands-Free audio.*
  - *Hands-Free operates slowly.*

Voice recognition related problems

Symptom	Cause	Solution method
Poor voice recognition	•Excessive, slow speech. •Excessive, forceful speech (shouting). •Speaking before the beep sound has ended. •Loud noise (speaking or noise from outside/inside vehicle). •Airflow from A/C is blowing against the microphone. •Speaking in off-standard expressions (dialect).	Regarding the causes indicated on the left, be careful with how you speak. In addition, when numbers are spoken in a sequence, recognition ability will improve if no stop is placed between the numbers.
False recognition of numbers		

Audio Set [Type A (non-touchscreen)]

Symptom	Cause	Solution method
Poor voice recognition	There is a malfunction in the microphone.	A poor connection or malfunction with the microphone may have occurred. Consult an Authorized Mazda Dealer.
Phone-related voice recognition is disabled	There is a problem with the connection between the Bluetooth® unit and the device.	If there is any malfunction after checking the pairing situation, check for device pairing or connection problems.
Names in the phonebook are not easily recognized	The Bluetooth® system is under a condition in which recognition is difficult.	By carrying out the following measures, the rate of recognition will improve. •Clear memory from the phonebook which is not used very often. •Avoid shortened names, use full names. (Recognition improves the longer the name is. By not using names such as “Mom”, “Dad”, recognition will improve.)
When operating the audio, a song name is not recognized	Song names cannot be recognized by voice.	—
You want to skip guidance	—	Guidance can be skipped by quickly pressing and releasing the Talk button.

Regarding problems with calls

Symptom	Cause	Solution method
When starting a call, vehicle noise from the other party can be heard	For about 3 seconds after starting a call, the Bluetooth® unit's Noise Suppression function requires time to adapt to the call environment.	This does not indicate a problem with the device.
The other party cannot be heard or the speaker's voice is quiet	The volume is set at zero or low.	Increase the volume.

Other problems

Symptom	Cause	Solution method
The indication for the remaining battery is different between the vehicle and the device	The indication method is different between the vehicle and the device.	—
When a call is made from the vehicle, the telephone number is updated in the incoming/outgoing call record but the name does not appear	The number has not been registered into the phonebook.	If the number has been registered into the phonebook, the incoming/outgoing call record is updated by the name in the phonebook when the engine is restarted.

Symptom	Cause	Solution method
The cell phone does not synchronize with the vehicle regarding the incoming/outgoing call record	Some types of cell phones do not synchronize automatically.	Operate the cell phone for synchronization.
It takes a long time to complete the function for changing the language	A maximum of 60 seconds is required.	—

Basic Operation Method

NOTE

- *The explanation of functions described in this manual may differ from the actual operation, and the shapes of screens and buttons and the letters and characters displayed may also differ from the actual appearance.*
  Additionally, depending on future software updates, the content may successively change without notice.
- *For additional information regarding Mazda Connect, please refer to the following Website.*
  http://infotainment.mazdahandsfree.com/

Audio Set (Type B) has 3 different human interfaces.

- Commander switch
- Touch panel
- Voice recognition with steering switch and microphone
  Refer to Voice Recognition on page 5-110.

▼ Commander switch operation

NOTE
For safety reasons, some operations are disabled while the vehicle is being driven.

Volume dial operation

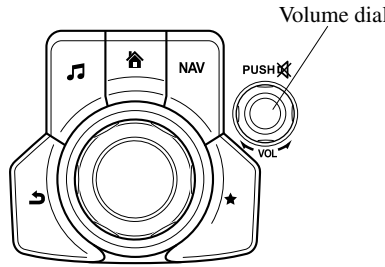

Press the volume dial to switch the audio MUTE on and off.
Turn the volume dial to adjust the volume. The volume increases by turning the dial clockwise, and decreases by turning it counterclockwise.

Switches around commander knob

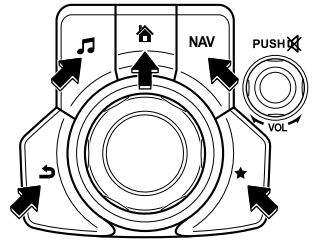

The following operations can be done by pressing the switches around the commander knob.

: Displays the home screen.

: Displays the Entertainment screen.

NAV : Displays the Navigation screen (Only navigation-equipped vehicles). For operation of the Navigation screen, refer to the navigation system manual. If the SD card for the navigation system is not inserted, the compass indicating the direction in which the vehicle is moving is displayed.

★ : Displays the Favorites screen. Long-press to store particular items in Favorites. (Radio, phonebook and destination of the navigation system can be programmed.)

: Returns to previous screen.

Commander knob operation

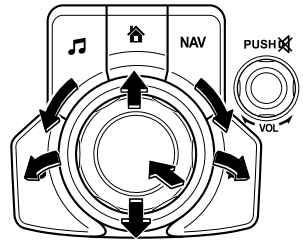

(Selection of icons on screen)

1. Tilt or turn the commander knob and move the cursor to the desired icon.
2. Press the commander knob and select the icon.

NOTE
Long-press operation of the commander knob is also possible for some functions.

Audio Set [Type B (touchscreen)]

▼ Touch panel operation

CAUTION

Do not press the screen strongly or press it with a sharp-pointed object. Otherwise, the screen could be damaged.

NOTE

For safety reasons, operation of the center display is disabled while the vehicle is being driven. However, items not displayed in gray can be operated using the commander switch while the vehicle is being driven.

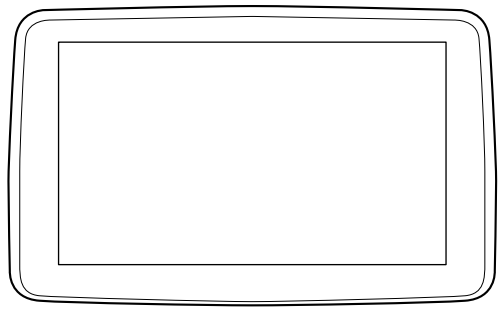

Touch & Tap

1. Touch or tap on the item indicated on the screen.
2. The operation is launched and the next item is displayed.

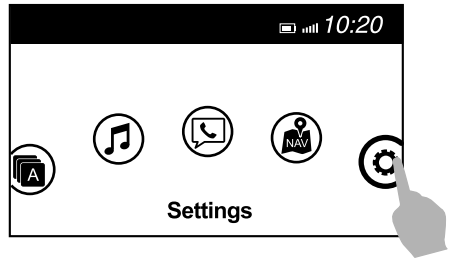

Slide (USB audio only)

1. Touch the setting item displaying a slider bar.
2. Touch the slider with your finger and move to the desired level.

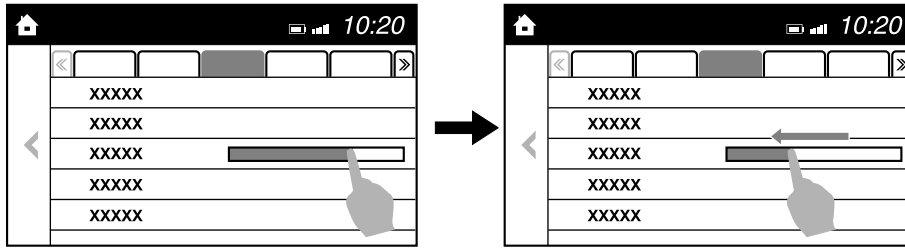

Swipe

1. Touch the screen with your finger and move up or down.
2. Items which were not displayed can be displayed.

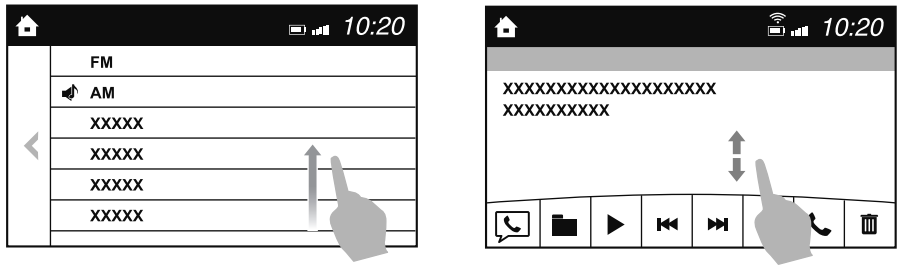

Return to previous screen

1. Touch the .

Displaying the home screen

1. Touch the .

Audio Set [Type B (touchscreen)]

Home screen

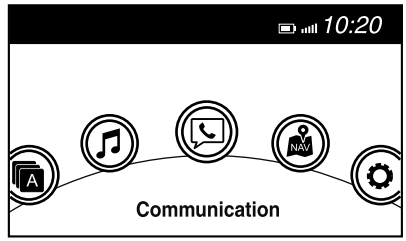

Icon	Function
	Applications Information such as average fuel economy, maintenance, and warnings can be verified. Depending on the grade and specification, the screen display may differ.
	Entertainment Operates audio such as the radio. The audio source most recently used is displayed. An audio source which cannot be used at that time is skipped and the previous audio source is displayed. To change the audio source, select the icon displayed at the bottom of the screen.
	Communication Bluetooth® related functions are available.
	Navigation Navigation screen is displayed (vehicles with navigation system). If the SD card for the navigation system is not inserted, the compass indicating the direction in which the vehicle is moving is displayed. The compass may not indicate the correct bearing when the vehicle is stopped or traveling at a slow speed.
	Settings Overall setting menu (Such as display, sound, Bluetooth® and Language). Depending on the grade and specification, the screen display may differ.

Volume/Display/Sound Controls

Commander switch

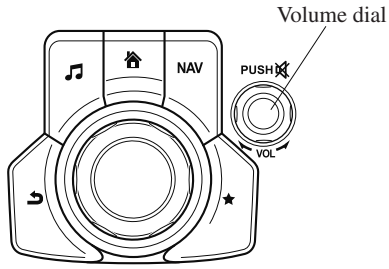

Audio control switch

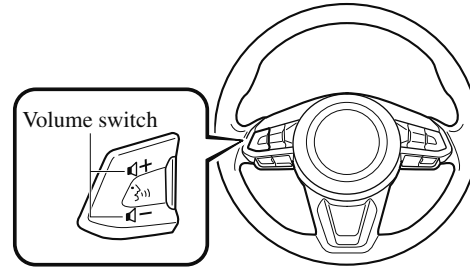

▼ Volume adjustment

Turn the commander switch volume dial. The volume switch on the steering switch can also be pressed.

NOTE
Press the volume dial to switch the audio MUTE on and off.

▼ Display setting

Select the ⚙ icon on the home screen to display the Settings screen.
Select the Display tab to select the item you would like to change.

Display OFF/Clock

The center display can be turned off.
Select Turn Display Off to turn the display off.
When Turn Display Off and Show Clock is selected the center display turns off and the clock is displayed.
The center display can be turned back on as follows:

- Touch the center display.
- Operate the commander switch.

Daytime/nighttime (System) screen setting

The daytime or nighttime screen can be selected.
Auto :
(With auto-light control)
Switches screen automatically according to parking lights illumination condition. However, when the light sensor detects that the surrounding area is bright such as when the parking lights are turned on in the daytime, the screen is switched to the daytime screen*1
(Without auto-light control)
Switches screen automatically according to parking lights illumination condition.*1
Day : Daytime screen setting
Night : Nighttime screen setting

*1 The display is constantly on daytime screen when the illumination dimmer is cancelled.

Brightness adjustment

Adjust the center display brightness using the slider.

Audio Set [Type B (touchscreen)]

Contrast adjustment

Adjust the center display contrast using the slider.

Display setting reset

All of the screen setting values can be reset to their initial settings.

1. Select Restore Factory settings.
2. Select Yes.

▼ Audio sound adjustment

Select the icon on the home screen to display the Settings screen.
Select the Sound tab to select the item you would like to change.

Indication	Setting value
Bass (Low pitch sound)	+ Side: Low pitch enhancement − Side: Low pitch reduction
Treble (Treble sound)	+ Side: Treble enhancement − Side: Treble reduction
Fade (Front/Rear volume balance)	Front: Front speaker volume enhancement Rear: Rear speaker volume enhancement
Balance (Left/right volume balance)	Right: Right speaker volume enhancement Left: Left speaker volume enhancement
ALC (Automatic volume adjustment)	Off—Adjustment at seven levels
Beep (Audio operation sound)	On/Off

ALC (Automatic volume adjustment)

The automatic level control (ALC) is a feature that automatically adjusts audio volume and sound quality according to the vehicle speed. The volume increases in accordance with the increase in vehicle speed, and decreases as vehicle speed decreases.

Operating the Radio

▼ Radio ON

Select the ♫ icon on the home screen to display the Entertainment screen. When selecting the desired radio, the following icons are indicated in the lower part of the center display.
AM/FM Radio

Icon	Function
	Displays the Entertainment menu. Use to switch to a different audio source.
	Displays the station list. Select Update Station List to display the frequencies of up to ten radio stations on the auto memory preset list. Select the desired frequency.
	Displays the Favorites list. Long-press to store radio station currently being aired.
	Switches the HD Radio on and off. Displays the multi-cast channel list of the HD Radio.
	You can search for receivable radio stations. Scanning stops at each station for about five seconds. Select again to continue receiving the radio station.
	You can change the radio frequency manually. Rotate the commander knob, slide the screen, or touch the radio frequency. Press ◀ or ▶ to change the radio frequency one step at a time. When ◀ or ▶ is long-pressed, the radio frequency changes continually. It stops when you remove your hand from the icon or the commander knob.
	Launches the iTunes Tagging function (for Apple devices with USB use only). Can be used when the HD Radio is on.
	Automatic radio station selection. When long-pressed, the radio frequency changes continually. It stops when you remove your hand from the icon or the commander knob.
	Displays sound settings to adjust audio quality level. Refer to Volume/Display/Sound Controls on page 5-69.

▼ Favorites Radio

Selected stations can be registered for convenient operation. Up to 50 stations can be registered. The Favorites list is common to AM, FM, and satellite radio.

Registering to Favorites

Long-press the ★ icon to register the current radio station. The registration can also be performed using the following procedure.

1. Select the ★ icon to display the Favorites list.
2. Select Add/Edit Radio Favorites.
3. Select Add <active station>.
4. The station is added to the bottom of the Favorites list.

NOTE
If the battery is disconnected, your Favorites list will not be deleted.

Selecting radio station from Favorites

1. Select the ★ icon to display the Favorites list.
2. Select the radio frequency to tune in the radio station.

Deleting from Favorites

1. Select the ★ icon to display the Favorites list.
2. Select Add/Edit Radio Favorites.
3. Select Delete.
4. Select the radio frequency you want to delete.
5. Select Delete.

Changing Favorites list order

1. Select the ★ icon to display the Favorites list.
2. Select Add/Edit Radio Favorites.
3. Select Move.
4. Select a radio frequency. The selected radio station can be moved.
5. Slide the radio station or move it using the commander switch, then select OK.

▼ Radio Broadcast Data System (RBDS)*

Radio text information display

Radio text information sent from a broadcasting station is displayed in the center display.

NOTE
Radio text information is a function of FM radio only. There is no text function on AM radio. Text information is not displayed in the following:

- *During* HD Radio *reception*
- *Not an RBDS broadcast*
- *RBDS broadcast, but radio text is not transmitted from the radio station*

Genre Seek

Some FM stations transmit Genre codes (Program type like Rock, News, and so on). This code enables alternative stations transmitting the same Genre code to be found quickly.

(To scan for Genre Seek:)

1. Select the icon while in the FM mode.
2. Select Genre Seek to open the genre list.
3. Select the genre type you want to select.
4. Select the ⏮, ⏭ icon.

NOTE
To change the desired genre, select the 𝄞 icon.

*Some models.

Ex.)
89.3 is currently being received. With Rock selected as the Genre, the radio stations broadcasting Rock are at the following frequencies.
98.3*1, 98.7, 104.3*1, 107.1
*1 Radio stations with good reception
The frequency changes as follows each time Genre Seek is pressed.
89.3→98.3→104.3→98.3

NOTE

- *Only one Genre can be selected.*
- *It may not be possible to receive any station even if the Genre Seek function is used.*
- *If a program in the selected genre is not broadcast to a region, reception is not possible even if the Genre Seek function is used.*
- *The Genre Seek function searches for genre code (program type) which FM analog broadcasts transmit.* HD Radio *specialty programs (HD2-HD8) cannot be searched because they are not FM analog broadcasts.*
- *If radio stations which are selected by scanning using the Genre Seek function are* HD Radio *broadcasting stations, they are changed from analog broadcasts to* HD Radio *broadcasts after a few seconds if the reception conditions are good. The genre is displayed after the switch, however, the genre for FM analog broadcasts may differ.*

▼ HD Radio*

What is HD Radio™ Technology and how does it work?

HD Radio™ Technology is the digital evolution of analog AM/FM radio. Your radio product has a special receiver which allows it to receive digital broadcasts (where available) in addition to the analog broadcasts it already receives. Digital broadcasts have better sound quality than analog broadcasts as digital broadcasts provide free, crystal clear audio. For more information, and a guide to available radio stations and programming, please visit www.hdradio.com.

Benefits of HD Radio™ Technology

(Information)
The song title, artist name, album name and genre will appear on the screen when available by the radio station.
(Multicast)
On the FM radio frequency most digital stations have “multiple” or supplemental programs on each FM station.

Listening to HD Radio™ Technology

If HD icon turns on by selecting a radio station which is an HD Radio broadcasting station, the analog broadcast is switched to an HD Radio broadcast automatically after a few seconds and then received.
If the HD Radio broadcast is stopped and changed to an analog broadcast, press down HD to turn off HD.

*Some models.

Multicast channel selection (FM)

If multi-cast channels are available for an HD Radio broadcast currently being received, the multi-cast channel list is displayed. Select the desired radio station.

NOTE

- *If an analog broadcast is received once and* HD Radio *is received while HD1 is selected, the audio unit switches to the* HD Radio *station automatically.*
- *When the* HD *icon is illuminated, there could be a noticeable difference in sound quality and volume when a change from digital to analog signals occurs. If the sound quality and volume become noticeably diminished or cut off, select the* HD *icon to turn off* HD Radio *(*HD *icon is not illuminated).*
- *Once an analog broadcast is received when HD1 is selected from the Favorite channels, it is switched to* HD Radio *automatically. If the radio reception conditions are poor, or HD is off, switching to* HD Radio *broadcasts is not possible.*
- *When an HD specialty channel (HD2 to HD8) is selected from the Favorite channels, "Signal Lost" is displayed and no audio is output until* HD Radio *is received. If the radio reception conditions are poor, "Signal Lost" continues to be displayed.*
- *If the* HD *icon is not illuminated, information such as song titles of the* HD Radio *station are received, however, the audio output is analog.*

iTunes Tagging (for Apple devices with USB use only)

By tagging a song currently being aired, the song can later be purchased from the iTunes Store. One hundred tags can be stored. A maximum of 100 tags (for 100 songs) can be stored for later downloading.

1. Select the icon. The tag is stored in the audio unit.
2. Connect the device via the vehicle's USB. Any stored tag(s) will be sent automatically to the connected device.
3. Once at home or after parking the vehicle safely, log onto the iTunes Store with your device. Your previously tagged song(s) can now be easily purchased.

NOTE

- *Both AM and FM* HD Radio *can be used.*
- *Because iTunes tagging only supports purchases from the iTunes Store, direct downloading of music from the vehicle's audio unit is not possible.*
- *If the available memory for the connected device is insufficient, the tag is not sent.*
- *If an error occurs while the tag is being sent, reconnect the device.*

Operating the Satellite Radio*

▼ What is satellite radio?

SiriusXM® Satellite Radio

SiriusXM satellite radio is a subscription-based satellite radio service that broadcasts a variety of music, sports, news, weather, traffic and entertainment programming.
Your new Mazda vehicle is factory-installed with SiriusXM satellite radio hardware and includes a limited trial subscription term that begins on the date of sale or lease of your vehicle. See an authorized dealer for availability.
The satellite radio service should be active in your vehicle, if you cannot hear SiriusXM audio, please activate online by visiting siriusxm.com/refresh or by calling SiriusXM Listener Care at 1-877-447-0011 (U.S.A.)/1-888-539-7474 Customer Care (Canada). You can find the radio ID by turning to Channel 0 or visiting siriusxm.com/activationhelp (U.S.A), and siriusxm.ca/subscribe-now/ (Canada).
For more information on extended subscription terms (a service fee is required), the online media player and a list of SiriusXM satellite radio channels, and other features, please visit www.siriusxm.com (U.S.A), and www.siriusxm.ca (Canada), or call SiriusXM at 1-877-447-0011 (U.S.A.)/ 1-888-539-7474 (Canada).

NOTE
This feature may not be available in all markets and requires an active subscription. SiriusXM reserves the unrestricted right to change, rearrange, add or delete programming. This includes canceling, moving or adding particular channels, and its prices, at any time, with or without notice to you. Mazda shall not be responsible for any such programming changes.

▼ Displaying the Radio ID (ESN)

When channel 0 is selected, the radio ID is displayed. Use the PREVIOUS or NEXT channel buttons to select channel 0.

*Some models.

Audio Set [Type B (touchscreen)]

▼ SiriusXM operation

Select the icon on the home screen to display the Entertainment screen. When XM is selected, the following icons are indicated in the bottom part of the center display.

Icon	Function
	Displays the Entertainment menu. Use to switch to a different audio source.
	Displays the channel list of the current category.
	Displays the favorites list. Long-press to store the channel currently being aired. Refer to Operating the Radio on page 5-71.
	Indicates that the parental lock function is in use. Switching of Lock/Unlock and PIN code setting changes can be performed.
	Plays each channel in the current channel list for 5 seconds. Select again to continue receiving the channel.
	Plays the previous channel.
	Plays the next channel.
	Displays sound settings to adjust audio quality level. Refer to Volume/Display/Sound Controls on page 5-69.

Selection from channel list

Receivable channels can be displayed on the channel list screen. You can easily select the channel you want to listen from the list. Each category can be also displayed.

1. Select the icon to display the channel list.
2. Select a desired channel.

(Select from category list)

1. Select the icon to display the channel list.
2. Select Category: to display the category list.
3. Select a desired category.

▼ Parental lock

If a channel is locked, the channel is muted.
To use the parental lock function, the PIN code must be initialized first.
By using the session lock, the parental lock can be enabled or disabled during the current drive cycle (from when the ignition is switched on to switched off).
When the session lock is on, the parental lock is available. When the session lock is off, the parental lock is temporarily cancelled.
When canceling the parental lock or session lock, or when changing the PIN code, PIN code input is required.

PIN code reset

If the registered code has been forgotten, reset the code to the default [0000] code.

1. Select the icon.
2. If the selected channel is locked, input the PIN code to cancel the parental lock temporarily.
3. Select Reset PIN Code.
4. Input the default code [0000] using the number buttons.
5. Select OK.
6. Input the new PIN code using the number buttons.
7. Select OK.

How to use AUX mode

▼ Playback

1. Select the icon on the home screen to display the Entertainment screen.
2. Select AUX to switch to the AUX mode. The following icons are displayed in the lower part of the center display.

Icon	Function
	Displays the Entertainment menu. Use to switch to a different audio source.
	Displays sound settings to adjust audio quality level. Refer to Volume/Display/Sound Controls on page 5-69.

NOTE

- *If a device is not connected to the auxiliary jack, the mode does not switch to the AUX mode.*
- *Adjust the audio volume using the portable audio device, commander switch, or audio control switch.*
- *Audio adjustments can also be made using the portable audio device's volume setting.*
- *If the connection plug is pulled out from the auxiliary jack while in AUX mode, noise may occur.*

How to use USB mode

Type	Playable data
USB mode	MP3/WMA/AAC/OGG file

This unit does not support a USB 3.0 device. In addition, other devices may not be supported depending on the model or OS version.
The recommended capacity of the USB memory is 16 GB or less.
USB devices formatted to FAT32 are supported (USB devices formatted to other formats such as NTFS are not supported).

▼ Playback

1. Select the icon on the home screen to display the Entertainment screen.
2. Select USB 1 or USB 2 to switch the USB mode. The following icons are displayed in the lower part of the center display.

Icon	Function
	Displays the Entertainment menu. Use to switch to a different audio source.
	Category list is displayed.
	Current track list is displayed. Select a desired track to play it.
	Plays the current track repeatedly. Select it again to play the tracks in the current track list repeatedly. When selected again, the function is canceled.
	Tracks in the current track list are played randomly. Select it again to cancel.
	Starts playing a track similar to the current track using Gracenote®'s More Like This™. Select the desired song from the category list to cancel More Like This™.
	If selected within a few seconds from the beginning of a song which has started to play, the previous song is selected. If more than a few seconds have elapsed, the song currently being played is replayed from the beginning. Long-press to fast reverse. It stops when you remove your hand from the icon or the commander knob.
	Track is played. When selected again, playback is temporarily stopped.
	Advances to the beginning of the next song. Long-press to fast forward.

Audio Set [Type B (touchscreen)]

Icon	Function
	Displays sound settings to adjust audio quality level. Refer to Volume/Display/Sound Controls on page 5-69.

NOTE

- *If a file name in the USB memory is too long, it could cause operation problems such as not being able to playback the song.*
  (Recommended: Within 80 characters)
- *The album art may not display depending on the album art size.*
- *To move to the desired location on the track, move the slider indicating the playback time.*
- *The appearance of the repeat and shuffle icons changes depending on the type of operation in which the function is used.*

Category list

Select the icon to display the following category list.
Select a desired category and item.

Category	Function
Playlist*1	Displays playlists on the device.
Artist	Displays the artist name list. All the tracks or tracks for each album of the selected artist can be played.
Album	Displays the album name list.
Song	All the tracks in the device are displayed.
Genre	Displays the genre list. All the tracks or tracks per album or artist in the selected genre can be played.
Audiobook*2	Displays the audiobook list. Chapters can be selected and played.
Podcast*2	Displays the podcast list. Episode can be selected and played.
Folder*3	Displays the folder/file list.

*1 Playlist folders of Apple devices are not supported.
*2 Apple device only
*3 USB-Sticks and USB-Android™ device only

Example of use (to play all tracks in USB device)

(Method 1)

1. Select ☰ to display the category list.
2. Select Song.
   All the tracks in the USB device are displayed.
3. Select a desired track.
   The selected track is played. All the tracks in the USB device can be played by continuing playback.

NOTE
Only the tracks in the desired category selected in Step 2 are played.

(Method 2)*1

1. Select ☰ to display the category list.
2. Select Folder.
   All the folders in the USB device are displayed.
3. Select All Songs.
   All the tracks in the USB device are displayed.
4. Select a desired track.
   The selected track is played. All the tracks in the USB device can be played by continuing playback.

*1 Can be operated using an Android™ device or USB flash memory.

NOTE
Only the tracks in the desired folder selected in Step 3 are played.

▼ Gracenote® Database

When a USB device is connected to this unit and the audio is played, the album name, artist name, genre and title information are automatically displayed if there is a match in the vehicle's database compilation to the music being played. The information stored in this device uses database information in the Gracenote® music recognition service.

⚠ CAUTION

For information related to the most recent Gracenote® database which can be used and how to install it, go to the Mazda Hands Free Website:
http://www.mazdahandsfree.com

Introduction

Gracenote, the Gracenote logo and logotype are either a registered trademark or a trademark of Gracenote, Inc. in the United States and/or other countries.

Gracenote® End User License Agreement
This application or device contains software from Gracenote, Inc. of Emeryville, California (“Gracenote”). The software from Gracenote (the “Gracenote Software”) enables this application to perform disc and/or file identification and obtain music-related information, including name, artist, track, and title information (“Gracenote Data”) from online servers or embedded databases (collectively, “Gracenote Servers”) and to perform other functions. You may use Gracenote Data only by means of the intended End-User functions of this application or device.
You agree that you will use Gracenote Data, the Gracenote Software, and Gracenote Servers for your own personal non-commercial use only. You agree not to assign, copy, transfer or transmit the Gracenote Software or any Gracenote Data to any third party. YOU AGREE NOT TO USE OR EXPLOIT GRACENOTE DATA, THE GRACENOTE SOFTWARE, OR GRACENOTE SERVERS, EXCEPT AS EXPRESSLY PERMITTED HEREIN.
You agree that your non-exclusive license to use the Gracenote Data, the Gracenote Software, and Gracenote Servers will terminate if you violate these restrictions. If your license terminates, you agree to cease any and all use of the Gracenote Data, the Gracenote Software, and Gracenote Servers. Gracenote reserves all rights in Gracenote Data, the Gracenote Software, and the Gracenote Servers, including all ownership rights. Under no circumstances will Gracenote become liable for any payment to you for any information that you provide. You agree that Gracenote, Inc. may enforce its rights under this Agreement against you directly in its own name.

The Gracenote service uses a unique identifier to track queries for statistical purposes. The purpose of a randomly assigned numeric identifier is to allow the Gracenote service to count queries without knowing anything about who you are. For more information, see the web page for the Gracenote Privacy Policy for the Gracenote service.
The Gracenote Software and each item of Gracenote Data are licensed to you “AS IS.” Gracenote makes no representations or warranties, express or implied, regarding the accuracy of any Gracenote Data from in the Gracenote Servers. Gracenote reserves the right to delete data from the Gracenote Servers or to change data categories for any cause that Gracenote deems sufficient. No warranty is made that the Gracenote Software or Gracenote Servers are error-free or that functioning of Gracenote Software or Gracenote Servers will be uninterrupted. Gracenote is not obligated to provide you with new enhanced or additional data types or categories that Gracenote may provide in the future and is free to discontinue its services at any time.
GRACENOTE DISCLAIMS ALL WARRANTIES EXPRESS OR IMPLIED, INCLUDING, BUT NOT LIMITED TO, IMPLIED WARRANTIES OF MERCHANTABILITY, FITNESS FOR A PARTICULAR PURPOSE, TITLE, AND NON-INFRINGEMENT. GRACENOTE DOES NOT WARRANT THE RESULTS THAT WILL BE OBTAINED BY YOUR USE OF THE GRACENOTE SOFTWARE OR ANY GRACENOTE SERVER. IN NO CASE WILL GRACENOTE BE LIABLE FOR ANY CONSEQUENTIAL OR INCIDENTAL DAMAGES OR FOR ANY LOST PROFITS OR LOST REVENUES.
© Gracenote, Inc. 2009

Updating the database

The Gracenote® media database can be updated using USB device.

1. Connect a USB device containing the software for updating Gracenote®.
2. Select the ⚙ icon on the home screen to display the Settings screen.
3. Select the System tab and select Music Database Update.
4. Select Search. The list of the update package stored in the USB device and the version are displayed.
5. Select the package to use the update.
6. Select Install.

NOTE
Gracenote® can be downloaded from the Mazda Hands-free Website.

Bluetooth®

▼ Introduction

Bluetooth® Hands-Free outline

When a Bluetooth® device (mobile phone) is connected to the vehicle's Bluetooth® unit via radio wave transmission, a call can be made or received by pressing the talk button, pick-up button, or hang-up button on the audio remote control switch, or by operating the center display. For example, even if a device (mobile phone) is in your coat pocket, a call can be made without taking the device (mobile phone) out and operating it directly.

Bluetooth® audio outline

When a portable audio unit equipped with the Bluetooth® communication function is paired to the vehicle, you can listen to music stored on the paired portable audio device from the vehicle's speakers. It is not necessary to connect the portable audio device to the vehicle's external input terminal. After programming, operate the vehicle audio control panel to play/stop the audio.

NOTE

- *For your safety, a device can be paired only when the vehicle is parked. If the vehicle starts to move, the pairing procedure will end. Park the vehicle in a safe place before pairing.*
- *The communication range of a Bluetooth® equipped device is about 10 meters (32 ft) or less.*
- *Basic audio operation is available using voice commands even if Bluetooth® is not connected.*
- *For safety reasons, operation of the center display is disabled while the vehicle is being driven. However, items not displayed in gray can be operated using the commander switch while the vehicle is being driven.*

⚠ CAUTION

Some Bluetooth® mobile devices are not compatible with the vehicle. Consult an Authorized Mazda Dealer, Mazda's call center or Web support center for information regarding Bluetooth® mobile device compatibility:

➢ *U.S.A.*
Phone: 800-430-0153
Web: www.mazdausa.com/mazdaconnect

➢ *Canada*
Phone: 800-430-0153
Web: www.mazdahandsfree.ca
➢ *Mexico*
Center of Attention to Client (CAC)
Phone: 01-800-01-MAZDA
Web: www.mazdamexico.com.mx

Applicable Bluetooth® specification (Recommended)
Ver. 1.1/1.2/2.0 + EDR/2.1 + EDR/3.0 (conformity)

▼ Component Parts

Audio unit

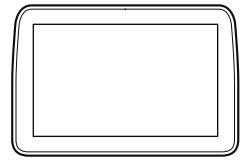

Talk button, Pick-up button and Hang-up button

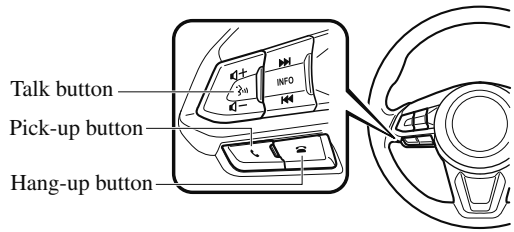

Microphone

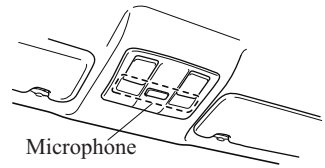

Microphone (hands-free)

The microphone is used for speaking voice commands or when making a Hands-free call.

Talk button

Activates the voice recognition. In addition, it skips the voice guidance.

Audio Set [Type B (touchscreen)]

Pick-up button

Responds to incoming calls. In addition, after selecting a contact or dialing a number, it places the call when the button is pressed.

Hang-up button

Ends the call or refuses an incoming call. In addition, it ends the voice recognition operation.

Commander switch

The commander switch is used for volume adjustment and display operation. Tilt or turn the commander knob to move the cursor. Press the commander knob to select the icon.

Volume adjustment

The volume dial of the commander switch is used to adjust the volume. Turn the dial to the right to increase volume, to the left to decrease it.
The volume can also be adjusted using the volume button on the steering wheel.

NOTE

- *Press the volume dial to switch the audio MUTE on and off.*
- *If the volume is lower compared to other audio modes, increase the volume from the device side.*

Conversation volume and the volume of the voice guidance and ringtone can each be set in advance.

1. Select the icon on the home screen to display the Communication screen.
2. Select Settings.
3. Adjust the Phone Volume and the VR and Ringtone using the slider.

Bluetooth® Preparation

▼ Device pairing

To use Bluetooth® audio and Hands-Free, the device equipped with Bluetooth® has to be paired to the unit using the following procedure. A maximum of 7 devices including Bluetooth® audio devices and hands-free mobile phones can be paired.

NOTE

- *The Bluetooth® system may not operate for 1 or 2 minutes after the ignition is switched to ACC or ON. However, this does not indicate a problem. If the Bluetooth® system does not connect automatically after 1 or 2 minutes have elapsed, make sure that the Bluetooth® setting on the device is normal and attempt to reconnect the Bluetooth® device from the vehicle side.*
- *If Bluetooth®-enabled devices are used in the following locations or conditions, connection via Bluetooth® may not be possible.*
  - *The device is in a location hidden from the center display such as behind or under a seat, or inside the glove compartment.*
  - *The device contacts or is covered by a metal object or body.*
  - *The device is set to power-saving mode.*

Pairing Procedure

1. Select the ⚙ icon on the home screen to display the Settings screen.
2. Select the Devices tab.
3. Select Bluetooth.
4. Turn the Bluetooth® setting on.
5. Select Add New Device to display the message and switch to the device operation.
6. Using your device, perform a search for the Bluetooth® device (Peripheral device).
7. Select “Mazda” from the device list searched by the device.
8. **(Device with Bluetooth® version 2.0)**
   Input the displayed 4-digit pairing code into the device.
   (Device with Bluetooth® version 2.1 or higher)
   Make sure the displayed 6-digit code on the audio is also displayed on the device, and touch the Yes.
   Connection permission and phonebook access permission for your mobile device may be required depending on the mobile device.
9. If pairing is successful, the functions of the device connected to Bluetooth® are displayed.
10. **(Devices compatible with Mazda E-mail / SMS function)**
    SMS (Short Message Service) messages, and E-mail for the device are downloaded automatically. A download permission operation for your device may be required depending on the device.

NOTE
When Call history and messages are downloaded automatically, each automatic download setting must be on.
Refer to Communication Settings on page 5-109.

After a device is registered, the system automatically identifies the device. By activating Bluetooth® Hands-Free again, or by activating Bluetooth® Hands-Free first after switching the ignition from OFF to ACC, the device connection condition is indicated in the center display.

IMPORTANT note about pairing and automatic reconnection:

- **If pairing is redone on the same mobile phone device, first clear "Mazda" displayed on the Bluetooth® setting screen of the mobile device.**
- When the OS of the device is updated, the pairing information may be deleted. If this happens, reprogram the pairing information to the Bluetooth® unit.
- Before you pair your device, make sure that Bluetooth® is "ON", both on your phone and on the vehicle.

▼ Device selection

If several devices have been paired, the Bluetooth® unit links the device last paired. If you would like to link a different paired device, it is necessary to change the link. The order of device priority after the link has been changed is maintained even when the ignition is switched off.

Connecting other devices

1. Select the ⚙ icon on the home screen to display the Settings screen.
2. Select the Devices tab.
3. Select Bluetooth.
4. Turn the Bluetooth® setting on.
5. Select the name of the device you would like to connect.
6. Phone and Audio **selection**
   Connects both devices as hands-free and Bluetooth® audio.
   Phone Only **selection**
   Connects as a hands-free device.
   Audio Only **selection**
   Connects as Bluetooth® audio.

NOTE
The following functions can be used for the Hands-free or audio.

- *Hands-free: Phone calls and E-mail/SMS*
- *Audio: Bluetooth® audio, Pandora®, Aha™, Stitcher™ radio*

Disconnecting a device

1. Select the ⚙ icon on the home screen to display the Settings screen.
2. Select the Devices tab.
3. Select Bluetooth.
4. Turn the Bluetooth® setting on.
5. Select the device name which is currently connected.
6. Select Disconnect.

▼ Deleting a device

Selecting and deleting devices

1. Select the icon on the home screen to display the Settings screen.
2. Select the Devices tab.
3. Select Bluetooth.
4. Turn the Bluetooth® setting on.
5. Select the device name which you would like to delete.
6. Select Unpair This Device.
7. Select Yes.

Deleting all devices

1. Select the icon on the home screen to display the Settings screen.
2. Select the Devices tab.
3. Select Bluetooth.
4. Select Custom Settings.
5. Select Unpair All Paired Devices.
6. Select Yes.

▼ Changing PIN code

PIN code (4 digits) can be changed.

1. Select the icon on the home screen to display the Settings screen.
2. Select the Devices tab.
3. Select Bluetooth.
4. Select Custom Settings.
5. Select Change Pairing Code.
6. Input the new PIN code to be set.
7. Select ✔.

Available Language

The Bluetooth® Hands-Free System applies to the following languages:

- English
- Spanish
- French

Refer to Settings on page 5-112.

Bluetooth® Audio

Applicable Bluetooth® specification (Recommended)
Ver. 1.1/1.2/2.0 + EDR/2.1 + EDR/3.0 (conformity)
Response profile

- A2DP (Advanced Audio Distribution Profile) Ver. 1.0/1.2
- AVRCP (Audio/Video Remote Control Profile) Ver. 1.0/1.3/1.4

A2DP is a profile which transmits only audio to the Bluetooth® unit. If your Bluetooth® audio device corresponds only to A2DP, but not AVRCP, you cannot operate it using the control panel of the vehicle's audio system. In this case, only the operations on the mobile device are available the same as when a portable audio device for a non-compliant Bluetooth® device is connected to the AUX terminal.

Function	A2DP	AVRCP		
		Ver. 1.0	Ver. 1.3	Ver. 1.4
Playback	X	X	X	X
Pause	X	X	X	X
File (Track) up/down	—	X	X	X
Reverse	—	—	X	X
Fast-forward	—	—	X	X
Text display	—	—	X	X
Repeat	—	—	Depends on device	Depends on device
Shuffle	—	—	Depends on device	Depends on device
Scan	—	—	Depends on device	Depends on device
Folder up/down	—	—	—	Depends on device

X: Available
—: Not available

NOTE

- *The battery consumption of Bluetooth® audio devices increases while Bluetooth® is connected.*
- *If a general mobile phone device is USB connected during music playback over the Bluetooth® connection, the Bluetooth® connection is disconnected. For this reason, you cannot have music playback over a Bluetooth® connection and music playback using a USB connection at the same time.*
- *If a device which supports AVRCP Ver. 1.6 or higher is connected, song information may not display correctly.*
- *The system may not operate normally depending on the Bluetooth® audio device.*

▼ Switching to Bluetooth® audio mode

To listen to music or voice audio recorded to a Bluetooth® audio device, switch to the Bluetooth® audio mode to operate the audio device using the audio system control panel.
Any Bluetooth® audio device must be paired to the vehicle's Bluetooth® unit before it can be used.
Refer to Bluetooth® Preparation (Type B) on page 5-87.

1. Turn on the Bluetooth® audio device's power.
2. Switch the ignition to ACC or ON.
3. Select the ♫ icon on the home screen to display the Entertainment screen.
4. When Bluetooth is selected, switches to the Bluetooth® audio mode to begin playback.

NOTE

- *If the application screen is not displayed on the device, Bluetooth® audio may not play on the center display.*
- *If Bluetooth® audio is used after using Pandora®, Aha™ or Stitcher™ radio, the application on the mobile device has to be closed first.*
- *If the Bluetooth® audio device does not begin playback, select the ▶/II icon.*
- *If the mode is switched from Bluetooth® audio mode to another mode (radio mode), audio playback from the Bluetooth® audio device stops.*

▼ Playback

To listen to a Bluetooth® audio device over the vehicle's speaker system, switch the mode to Bluetooth® audio mode. (Refer to “Switching to Bluetooth® audio mode”)
After switching to the Bluetooth® audio mode, the following icons are displayed in the lower part of the display. Icons which can be used differ depending on the version of the Bluetooth® audio device which you are currently using.

Icon	Function
♫	Displays the Entertainment menu. Use to switch to a different audio source.
☰	**(AVRCP Ver. 1.4 only)** Displays the top level folder/file list. Select the folder which you want to select. The files in the selected folder are displayed. Select the file you want to play.
⟲	**(AVRCP Ver. 1.3 or higher)** Replays the song currently being played repeatedly. When selected again, the songs in the folder are played repeatedly. Select it again to cancel. Icons change when the song is repeated or the folder is repeated.

Audio Set [Type B (touchscreen)]

Icon	Function
	(AVRCP Ver. 1.3 or higher) Plays songs in the folder in random order. When selected again, the songs on the device are played in random order. Select it again to cancel. Icons change during folder shuffle or device shuffle.
	Scans the titles in a folder and plays the beginning of each song to aid in finding a desired song. When selected again, the beginning of each song on the device is played. When selected again, the operation is canceled and the song currently being played continues.
	Returns to the beginning of the previous song. Long-press to fast reverse. It stops when you remove your hand from the icon or the commander knob.
	Plays the Bluetooth® audio. When selected again, playback is temporarily stopped.
	Advances to the beginning of the next song. Long-press to fast forward. It stops when you remove your hand from the icon or the commander knob.
	Displays sound settings to adjust audio quality level. Refer to Volume/Display/Sound Controls on page 5-69.

▼ Bluetooth® Audio Device Information Display

If a Bluetooth® audio device is connected, the following information is displayed in the center display.

	AVRCP Ver. lower than 1.3	AVRCP Ver. 1.3	AVRCP Ver. 1.4 or higher
Device name	X	X	X
Remaining battery charge of device	X	X	X
Song name	—	X	X
Artist name	—	X	X
Album name	—	X	X
Playback time	—	X	X
Genre name	—	X	X
Album art image	—	—	—

X: Available
—: Not available

NOTE
Some information may not display depending on the device, and if the information cannot be displayed, "Unknown - - -" is indicated.

How to Use Pandora®*

▼ What is Pandora®?

Pandora®*1 is free personalized Internet radio. Simply enter a favorite artist, track, genre, and Pandora® will create a personalized station that plays their music and more like it. Rate songs by giving thumbs-up and thumbs-down feedback to further refine your station, discover new music and help Pandora® play only music you like.

*1 Pandora®, the Pandora® logo, and the Pandora® trade dress are trademarks or registered trademarks of Pandora Media, Inc., used with permission.

NOTE

- *Pandora® may not be available outside of the U.S.A..*
- *To operate Pandora® from your Bluetooth® device, perform the following in advance:*
  - *Create Pandora® account on the Web.*
  - *Create Pandora® station using Pandora® application.*
  - *Install Pandora® application on your device.*

▼ Playback

Select the icon on the home screen to display the Entertainment screen. When Pandora is selected, the following icons are indicated in the bottom part of the center display.

Icon	Function
	Displays the Entertainment menu. Use to switch to a different audio source.
	Displays the station list. Use to switch to other stations.
	Thumbs-Down Press the icon to tell Pandora® not to play this track.
	Thumbs-Up Press the icon to tell Pandora® “you like this track” and it helps to bring in more tracks like it to your station.
	Bookmarking Bookmarks the song or artist currently being played.
	Plays the track. When selected again, playback is temporarily stopped.
	Goes to the next song.

*Some models.

Audio Set [Type B (touchscreen)]

Icon	Function
	Displays sound settings to adjust audio quality level. Refer to Volume/Display/Sound Controls on page 5-69.

NOTE

- *The skip function may not be available depending on the device.*
- *The number of skips is limited by Pandora®.*
- *If the icon is selected when the skip song function is running, the next song is skipped.*

▼ Selection from station list

Selection can be made from a programmed radio station list.

1. Select the icon.
2. Select the desired radio station.

NOTE
When Shuffle is selected, songs randomly selected from the radio station list are played.

Selecting the sort method

The displayed order of the station list can be changed.

1. Select the icon.
2. Select Sort By:.
3. Select Date to display in the order starting from the newly created station.
4. Select A-Z to display in alphabetical order.

NOTE
The displayed order of Shuffle cannot be changed.

▼ Bookmarking

You can bookmark song or artist to check out later on the Web.

1. Select the icon.
2. Select Bookmark Song to bookmark the song.
3. Select Bookmark Artist to bookmark the artist.

How to Use Aha™

▼ What is Aha™?

Aha™*1 is an application which can be used to enjoy various Internet content such as Internet radio and podcasts.
Stay connected to your friends activities by getting updates from Facebook and Twitter.
Using the location-based service, nearby services and destinations can be searched or real-time local information can be obtained.
For details on Aha™, refer to “http://www.aharadio.com/”.

*1 Aha™, the Aha™ logo, and the Aha™ trade dress are trademarks or registered trademarks of Harman International Industries, Inc., used with permission.

NOTE

- *The service content provided by Aha™ varies depending on the country in which the user resides. In addition, the service is not available in some countries.*
- *To operate Aha™ from your Bluetooth® device, perform the following in advance:*
  - *Install the Aha™ application to your device.*
  - *Create an Aha™ account for your device.*
  - *Log onto Aha™ using your device.*
  - *Select the preset station on your device.*
- *If the application screen is not displayed on the device, Aha™ may not play on the center display.*

▼ Playback

Select the ♫ icon on the home screen to display the Entertainment screen. When aha is selected, the following icons are displayed at the bottom of the center display. The displayed icon differs depending on the selected station.
In addition, icons other than the following icons may be displayed.

Icon	Function
♫	Displays the Entertainment menu. Use to switch to a different audio source.
☰	Displays the main menu. Use to switch to other stations.
🗀	Displays the content list. Use to switch to other desired content on the station.
👍	**Like*1** Evaluates the current content as “Like”.

Audio Set [Type B (touchscreen)]

Icon	Function
	Dislike*1 Evaluates the current content as “Dislike”.
	Reverses for 15 seconds.
	Map (vehicles with navigation system) Displays the destination searched by the location based services on the navigation system.
	Call A call can be made to the telephone number of a shop searched using the Location Based Services. Available when a device is connected as a Hands-Free.
	Returns to the previous content.
	Pauses playback of the content. When selected again, playback resumes.
	Goes to the next content.
	Fast-forwards for 30 seconds.
	Displays sound settings to adjust audio quality level. Refer to Volume/Display/Sound Controls on page 5-69.

*1 Some stations may use alternate variations of Like and Dislike, based on station type or provider.

Main menu

Select the icon.

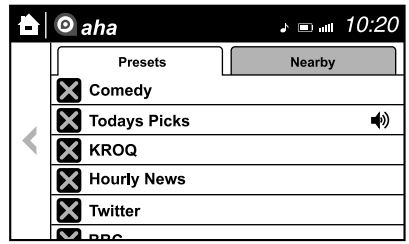

Switch the tab and select the station category.

Tab	Function
Presets	Displays the preset station list set on the device. Select the preset station name to play the station content.

Tab	Function
Nearby	Select the desired station. Guidance is provided to the searched destination near the vehicle's position. You can designate desired categories previously set using the filter setting on your device.

NOTE
The available Location Based Services may differ because the services depend on the content provided by Aha™.

Example of use (Location Based Services)

1. Select the desired station from the "Nearby" tab on the main menu.
   The destination name or address playback starts in the order of the destination name list.

2. When the icon is selected, the currently displayed destination is displayed on the navigation system (vehicles with navigation system).
3. When the icon is selected, a phone call is placed to the currently displayed destination.
4. Select the icon to display the content list.

Selection of other destinations from the list can be made.

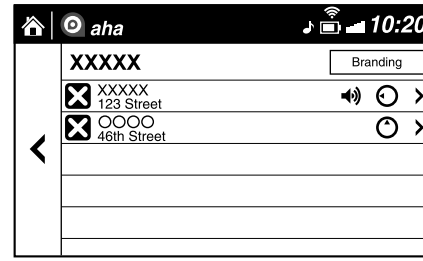

How to Use Stitcher™ Radio

▼ What is Stitcher™ Radio?

Stitcher™*1 radio is an application which can be used to listen to Internet radio or stream podcasts.
Recommended content is automatically selected by registering content which you put into your favorites, or by pressing the Like or Dislike button.
For details on Stitcher™ Radio, refer to “http://stitcher.com/”.

*1 Stitcher™, the Stitcher™ logo, and the Stitcher™ trade dress are trademarks or registered trademarks of Stitcher, Inc., used with permission.

NOTE

- *To operate Stitcher™ Radio from your Bluetooth® device, perform the following in advance:*
  - *Install the Stitcher™ Radio application to your device.*
  - *Create a Stitcher™ Radio account for your device.*
  - *Log onto Stitcher™ Radio using your device.*
- *If the application screen is not displayed on the device, Stitcher™ may not play on the center display.*

▼ Playback

Select the ♫ icon on the home screen to display the Entertainment screen. When Stitcher is selected, the following icons are indicated in the bottom part of the center display.

Icon	Function
♫	Displays the Entertainment menu. Use to switch to a different audio source.
☰	Displays the station list. Use to switch to other stations.
👎	**Dislike** Evaluates the current program as “Dislike”.
👍	**Like** Evaluates the current program as “Like”.
★	Adds the current station to your favorites or deletes the current station from your favorites.
:30	Reverses for 30 seconds.

Icon	Function
▶/❚❚	Plays the station. Select it again to pause playback.
▶▶❙	Goes to the next station.
	Displays sound settings to adjust audio quality level. Refer to Volume/Display/Sound Controls on page 5-69.

Station list

1. Select the ☰ icon to display the station list.
   ① Favorites station name: Select to display the program registered to your favorites.
   ② Category name: A recommended category selected from your favorites by Stitcher™ is displayed.
   Select it to display the category program.

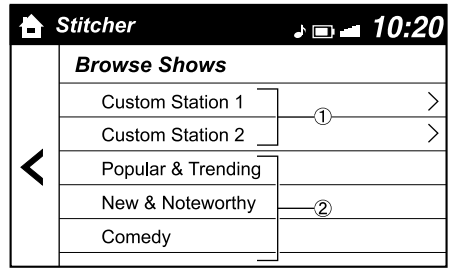

2. Select the program name to play it.

Add to your favorites

If the current program has not been registered to your favorites, it can be registered to your favorites.

1. Select the ★ icon to display the favorites station which the registration can be added.
2. Select the station name which you want to register.
3. Select OK to add the program to the selected favorites station.

NOTE

- *Multiple favorites stations can be selected and registered.*
- *Favorites stations registered by oneself as well those set by default are displayed.*

Delete from your favorites

If the current program has already been registered to your favorites, the program can be deleted from your favorites.

1. Select the ★ icon.
2. The program is automatically deleted from the favorites station.

Bluetooth® Hands-Free

▼ Making a Call

For Mazda Connect, making calls is possible using any of the following six methods:

- Phonebook downloaded from Bluetooth® device (mobile phone) (voice recognition function can be used)
- Favorites
- Call record
- Dialing a telephone number (voice recognition function can be used)
- “Redial” - Voice recognition command for making a call to the latest outgoing call record.
- “Call back” - Voice recognition command for making a call to the latest incoming call record.

Phonebook Usage

Telephone calls can be made by saying the contact name in the downloaded phonebook or the name of a person whose phone number has been registered in the Bluetooth® Hands-Free. Refer to Import contact (Download Phonebook).

1. Press the talk button.
2. Wait for the beep sound.
3. **Say:** “Call XXXXX... (Ex. “John”) Mobile”. (You can also say, “Home”, “Work”, or “Other” instead of “Mobile”, depending on how you set up your contact information.)
4. Follow the voice guidance to make the call, or simple press the pick-up button on the steering switch during or after the guidance to make the call.

Screen operation

1. Select the icon on the home screen to display the Communication screen.
2. Select Contacts to display the contact list.
3. Select the contact you would like to call to display the details for the contact.
4. Select the desired phone number to make the call.

Import contact (Download Phonebook)

Phonebook data from your device (Mobile phone) can be sent and registered to your Bluetooth® Hands-Free phonebook using Bluetooth®.

(Automatic downloading)

The “Auto Download Contacts” setting must be on. When hands-free is connected to the device, the phonebook is downloaded automatically.
Refer to Communication Settings on page 5-109.

(Manually downloading)

If the “Auto Download Contacts” setting is off, download the phonebook using the following procedure.

1. Select the icon on the home screen to display the Communication screen.
2. Select Contacts to display the contact list.
3. Select Edit Contacts.
4. Select Import All Contacts or Import Selected Contact to switch to the device operation.
5. If Import All Contacts is selected, select Download.

6. Download will be started from the mobile phone.

NOTE

- *If "Import All Contacts" is performed after saving the phonebook to the Bluetooth® unit, the phonebook will be overwritten.*
- *A maximum of 1,000 contacts can be registered to the phonebook.*
- *Phonebook, incoming/outgoing call record, and favorite memories are exclusive to each mobile phone to protect privacy.*

Favorites Contacts

A maximum of 50 contacts can be registered. It will take less time to make a call after registering the telephone number. In addition, you do not have to look for the person you want to call in the phonebook.

Registering your favorites

1. Select the icon on the home screen to display the Communication screen.
2. Select Favorites to display the favorites list.
3. Select Add/Edit Communication Favorites.
4. Select Add New Contact or Add New Contact Details.
5. Select from the displayed list.

NOTE
When "Add New Contact" is selected, information such as the selected person's name is also registered. In addition, when "Add New Contact Details" is selected, only the telephone number of the selected person is registered.

Calling a favorite

1. Select the icon on the home screen to display the Communication screen.
2. Select Favorites to display the favorites list.
3. **(If only one phone number is registered to contact)**
   Select the contact information you would like to call. Go to Step 5.
   (If multiple phone numbers are registered to contact)
   Select the contact you would like to call to display the screen indicating the details for the contact. Go to Step 4.
4. Select the phone number you would like to call.
5. Select Yes.

Deleting a favorite

1. Select the icon on the home screen to display the Communication screen.
2. Select Favorites to display the favorites list.
3. Select Add/Edit Communication Favorites.
4. Select Delete.
5. Select the contact information which you would like to delete.
6. Select Delete.

Changing the display order of your favorites list

1. Select the icon on the home screen to display the Communication screen.
2. Select Favorites to display the favorites list.
3. Select Add/Edit Communication Favorites.
4. Select Move.
5. The contact can be moved after it is selected.

6. Slide the contact or move it using the commander switch, then select OK.

Changing contact name of your favorites

1. Select the icon on the home screen to display the Communication screen.
2. Select Favorites to display the favorites list.
3. Select Add/Edit Communication Favorites.
4. Select Rename.
5. Select the contact to display the keyboard screen.
6. If a new name is input and OK is selected, the contact name is stored.

NOTE
If the contact is long-pressed when the favorites list is displayed, the contact information can be edited (deleted, moved).

Telephone Number Input

NOTE
Practice this while parked until you are confident you can do it while driving in a non-taxing road situation. If you are not completely comfortable, make all calls from a safe parking position, and only start driving when you can devote your full attention to driving.

1. Select the icon on the home screen to display the Communication screen.
2. When Dial Phone is pressed, the dial pad is displayed.
3. Input the telephone number using the dial pad.
4. Select to make the call.

Numeral or symbol entry

Use the dial pad.
Long-press the to input +.
Select to delete the currently input value.
Long-press to delete all input values.

Redial Function

Makes a call to the last person called (latest person on outgoing call record) from the mobile phone/vehicle.
1. Press the talk button.
2. Wait for the beep sound.
3. **Say:** “Redial”

Call back Function

Makes a call to the last person who called your (latest person on incoming call record) mobile phone/vehicle.
1. Press the talk button.
2. Wait for the beep sound.
3. **Say:** “Call back”

Mobile 911 (U.S.A./Canada only)

If the vehicle is involved in a moderate to severe collision, a call is made automatically to 911 from the connected device. The “Emergency Assistance Call” setting must be on.
Refer to Communication Settings on page 5-109.

CAUTION

Though the system can be set to not call 911, doing so will defeat the purpose of the system. Mazda recommends that the Mobile 911 system remain activated.

NOTE

- ***Mobile 911 is a secondary function of the audio entertainment system. Therefore, the mobile 911 function does not assure that the call is always made to 911 after an accident occurs.***
- *A Hands-free device must be paired and connected. The 911 operator can verify the vehicle's position information using the Hands-free device GPS if equipped.*

1. If the vehicle is involved in a moderate to severe collision, notification of the call to 911 is made via audio and screen display. To cancel the call, press Cancel Emergency Assistance Call or hang-up button within 10 seconds.
2. If Cancel Emergency Assistance Call or hang-up button is not pressed within 10 seconds, the call is made to 911 automatically.

Audio Set [Type B (touchscreen)]

▼ Receiving an Incoming Call

When an incoming call is received, the incoming call notification screen is displayed. The "Incoming Call Notifications" setting must be on.
Refer to Communication Settings on page 5-109.
To accept the call, press the pick-up button on the audio control switch or select Answer on the screen.
To reject the call, press the hang-up button on the audio control switch or select Ignore on the screen.
The following icons are displayed on the screen during a call. Icons which can be used differ depending on use conditions.

Icon	Function
	Displays the Communication menu.
	Ends the call.
	Transferring a call from hands-free to a mobile phone Communication between the Bluetooth® unit and a device (mobile phone) is canceled, and an incoming call will be received by the device (mobile phone) like a standard call.
	Transferring a call from a device (mobile phone) to hands-free Communication between devices (mobile phone) can be switched to Bluetooth® Hands-Free.
	Mute The microphone can be muted during a call. When selected again, the mute is canceled.
	To make a 3-way call, select the contacts from the following: Call History: Call History is displayed. Contacts: The phonebook is displayed. Dial: The dial pad is displayed. Input the phone number. The device may be unusable depending on the contractual content.
	The call on hold is made to make a 3-way call. The device may be unusable depending on the contractual content.
	Switches the call on hold.
	DTMF (Dual Tone Multi-Frequency Signal) Transmission This function is used when transmitting DTMF via the dial pad. The receiver of a DTMF transmission is generally a home telephone answering machine or a company's automated guidance call center. Input the number using a dial pad.

NOTE

- *If the ignition is switched off during a hands-free call, the line is transferred to the device (Mobile phone) automatically.*
- *If the DTMF code has two or more digits or symbols, each one must be transmitted individually.*

▼ Call Interrupt

A call can be interrupted to receive an incoming call from a third party.
When Hold + Answer is selected or the pick-up button on the steering wheel is pressed, the current call is held and the system switches to the new incoming call.
When End + Answer is selected, the current call is ended and the system switches to the new incoming call (GSM network only).
When Ignore is selected or the hang-up button on the steering wheel is pressed, an incoming call is refused.

NOTE

- *The function may not be available depending on the contractual content of the mobile device.*
- *The function may not be operable depending on the type of the telephone network and the mobile device.*

▼ Receiving and Replying to Messages (available only with E-mail/SMS compatible phones)

SMS (Short Message Service) messages, and E-mail received by connected devices can be downloaded, displayed, and played (read by the system).
Additionally, replies can also be made to calls and messages in the received messages.

Downloading messages

Up to 20 new messages can be downloaded and displayed from a connected device.

NOTE
For E-mail, 20 messages for each account can be downloaded.

(Automatic downloading)

The “Auto Download Email” (E-mail) or “Auto Download Text Message” (SMS) setting must be on. A message is downloaded automatically when the Bluetooth® unit is connected to the device.
Refer to Communication Settings on page 5-109.

(Manually downloading)

When the “Auto Download Email” (E-mail) or “Auto Download Text Message” (SMS) setting is off, the message is downloaded using the following procedure.

1. Select the icon on the home screen to display the Communication screen.
2. Select Email or Text Messages to display the Inbox.
3. Select Update Inbox.
4. Download will be started from the mobile phone.

NOTE

- *Attached data is not downloaded.*
- *Messages up to 1 kilobyte (E-mail)/ 140-bytes (SMS) can be downloaded.*
- *A message list is created for each device.*
- *If the connected device does not correspond to MAP 1.0, the AT command is used to download. The downloaded message indicates that it is already read.*
- *Downloading using the AT command may not function depending on the connected device.*
- *If an iPhone is connected, the following functions cannot be used.*
  - *Downloading past messages*
  - *Replying to messages*

∗iPhone is a trademark of Apple Inc., registered in the U.S. and other countries.

Receiving messages

(Method 1)

When a device receives a message, a message received notification is displayed. The “Email Notifications” (E-mail) or “Text Notifications” (SMS) setting must be on.
Refer to Communication Settings on page 5-109.
Select Read and display the message.

(Method 2)

1. Select the icon on the home screen to display the Communication screen.
2. Select Notifications and display the new message list for E-mail and SMS.
3. Select the message you would like to display.

The following icons are displayed in the lower part of the details on the message. Icons which can be used differ depending on use conditions.

Icon	Function
	Displays the Communication menu.
	Displays the inbox.
	Plays back a message. When selected again, playback is temporarily stopped.
	Displays the previous message.
	Displays the next message.
	Only replies to the sender of the currently displayed message. Select the sentence on the displayed reply screen and select the sentence for sending from the preset message. Select Send.
	(Only E-mail) Replies to all members including CC. Select the sentence on the displayed reply screen and select the sentence for sending from the preset message. Select Send.
	Makes a call to a person who sent a message. For E-mail, this function may not work depending on the device.
	Deletes a message. The messages stored in a device is also deleted.

NOTE
Up to three preset messages can be selected.

Example of use (verify unread E-mail)

1. Select the icon on the home screen to display the Communication screen.
2. Select Email to display the inbox.

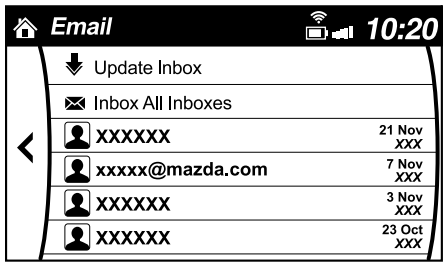

3. Select the unread message displayed in bold.
4. The details of the message are displayed and replying to the message, making a call, or playback can be performed.

Changing account for displaying (E-mail only)

1. Select Inbox.
2. Select the account which you would like to display. Only the messages for the selected account are displayed in the inbox.

Editing preset messages

1. Select the icon on the home screen to display the Communication screen.
2. Select Settings.
3. Select Edit Preset Messages.
4. Select the preset message which you would like to edit. The keyboard screen is displayed.
5. When the message is input and ✔ is selected, the message is stored as a preset message.

NOTE

- *Select the icon to change the language.*
- *Select the icon to switch between capitalized and lower-case characters.*
- *Select the icon to return to the previous screen without storing the edit.*

▼ Communication Settings

Select the icon on the home screen to display the Communication screen.
Select Settings to change the setting.

Item	Setting	Function
Bluetooth®	—	Go to Bluetooth® setting menu. Refer to Bluetooth® Preparation on page 5-87.
Incoming Call Notifications	On/Off	Notifies when an incoming call is received.
Auto Download Text Message	On/Off	Downloads SMS automatically when the Bluetooth® unit is connected to the device.
Text Notifications	On/Off	Notifies when a new SMS is received.
Auto Download Email*1	On/Off	Downloads E-mail automatically when the Bluetooth® unit is connected to the device.
Email Notifications	On/Off	Notifies when a new Email is received.
Auto Download Call History	On/Off	Downloads Call History automatically when the Bluetooth® unit is connected to the device.
Auto Download Contacts*1	On/Off	Downloads the phonebook automatically when the Bluetooth® unit is connected to the device.
Ringtone	Car/Phone/Off	Changes the ringtone setting.
Phone Volume	Adjusts using the slider.	Adjusts the conversation volume.
VR and Ringtone	Adjusts using the slider.	Adjusts the voice guidance and ringtone volume.
Contacts Display Order	First Name, Last Name	Displays the contact information in alphabetical order of the first name.
	Last Name, First Name	Displays the contact information in alphabetical order of the last name.
Edit Preset Messages	—	Edits the preset message. Refer to Receiving and Replying to Messages (available only with E-mail/SMS compatible phones) on page 5-105.
Emergency Assistance Call	On/Off	Mobile Utilizes the Mobile 911 function.
Restore Factory settings	—	Initializes all Communication Settings.

*1 Depending on the device, it may be necessary to acquire download permission on the device side.

Voice Recognition

▼ Basic Operation Method

Activating Voice Recognition

Press the talk button.

Ending Voice Recognition

Use one of the following methods:

- Press the hang-up button.
- Say, “Cancel”.
- Operate the commander switch or the center display (only when vehicle is stopped).

Skipping Voice Guidance (for faster operation)

Press and release the talk button.

Troubleshooting for Voice Recognition

If you do not understand an operation method while in the voice recognition mode, say “Tutorial” or “Help”.

Commands useable anytime during voice recognition

“Go Back” and “Cancel” are commands which can be used at anytime during voice recognition.

Returning to previous operation

To return to the previous operation, say, “Go Back” while in voice recognition mode.

Cancel

To put the Bluetooth® Hands-Free system in standby mode, say, “Cancel” while in voice recognition mode.

To prevent a deterioration in the voice recognition rate and voice quality, the following points should be observed:

- **The voice recognition cannot be performed while voice guidance or the beep sound is operating. Wait until the voice guidance or the beep sound is finished before saying your commands.**
- Phone related commands are available only when your phone is connected via Bluetooth®. Make sure your phone is connected via Bluetooth® before you operate phone related voice commands.
- Music play commands, such as Play Artist and Play Album can be used only in USB audio mode.
- Do not speak too slowly or loudly (no loud voice).
- Speak clearly, without pausing between words or numbers.
- Dialects or different wording other than hands-free prompts cannot be recognized by voice recognition. Speak in the wording specified by the voice commands.
- It is not necessary to face the microphone or approach it. Speak the voice commands while maintaining a safe driving position.
- Close the windows and/or the moonroof to reduce loud noises from outside the vehicle, or turn down the airflow of the climate control system while Bluetooth® Hands-Free is being used.
- Make sure the vents are not directing air up towards the microphone.

NOTE
If the voice recognition performance is not satisfactory.
Refer to Troubleshooting on page 5-115.

▼ Voice Command List

Voice command

When the talk button is pressed and the following command is spoken, the audio or navigation can be operated. The commands in the () can be omitted. The specified name and number are put into the {}.

Standard command

Voice command	Function
Help	Usable commands can be verified.
Tutorial	Basic voice commands and methods of use can be verified.
(Navigate/Take me/Drive) Home	Set the destination to Home.

Communication (phone) related command

Voice command	Function
Call {name in phonebook} (mobile/home/work/other) Example: “Call John Mobile”	Call to the contact in the downloaded phonebook. Refer to Making a Call on page 5-100.
Redial	Call to the last contact you called. Refer to Making a Call on page 5-100.
Callback	Call to the last contact who called you. Refer to Making a Call on page 5-100.

Entertainment (audio) related command

Voice command	Function	Corresponding audio source
(Go to/Play) Bluetooth (Audio)	Switches the audio source to BT audio. Can also switch to each audio source by similarly using commands such as FM, AM, or USB.	All
Play Artist {Artist name}	Plays the selected artist.	USB

Navigation related command*

For the navigation screen voice commands, refer to the separate navigation system manual.

NOTE

- *Some commands cannot be used depending on the grade and specification.*
- *Some commands cannot be used depending on the device connection conditions and the use conditions.*
- *The commands are examples of the available commands.*

*Some models.

Settings

NOTE
Depending on the grade and specification, the screen display may differ.

Select the icon on the home screen and display the Settings screen.
Switch the tab and select the setting item you want to change.
You can customize settings in the setup display as follows:

Tab	Item	Function
AD-Disp	Height Brightness Control Other	Refer to Active Driving Display on page 4-21.
Display	Refer to Volume/Display/Sound Controls on page 5-69.	
Safety	Distance Recognition Support System SBS/SCBS Other	Refer to Personalization Features on page 9-9.
Sound	Refer to Volume/Display/Sound Controls on page 5-69.	
Clock	Adjust Time	Displays the currently set time is displayed. Press + to advance the hour/minute, and select − to move the hour/minute back. AM/PM can only be selected with the 12-hour clock display.
	GPS Sync	Synchronizes with GPS when turned on. When turned off, the time can be changed from “Adjust Time”.
	Time Format	Changes the display between 12 and 24-hour clock time.
	Time Zone Select	When it's not synchronized with GPS, select the region you want to specify.
	Daylight Savings Time	Turns the daylight saving time setting on/off. When ON, the time advances 1 hour. When OFF, it returns to normal time.
Vehicle	Rain Sensing Wiper Door Locks Other	Refer to Personalization Features on page 9-9.
Devices	Bluetooth	Refer to Bluetooth® Preparation on page 5-87.

Audio Set [Type B (touchscreen)]

Tab	Item		Function
System	Tool Tips		Turns button explanations ON/OFF.
	Language		Changes the language.
	Temperature		Changes the setting between Fahrenheit and Celsius.
	Distance		Changes the setting between miles and kilometers.
	Music Database Update		Used to update Gracenote®. Gracenote® is used with USB Audio, and provides: 1. Supplemental music information (Such as song name, artist name) 2. Voice recognition assistance for Play Artist and Play Album Gracenote® can be downloaded from the Mazda Handsfree Website. Refer to Gracenote® Database on page 5-82.
	Restore All Factory Settings		Memory and settings are initialized to the factory settings. The initialization launches by selecting the Yes button.
	About	Agreements and Disclaimers	Verify the disclaimer and agree.
		Version Information	Can verify the current audio unit OS version and Gracenote® Database version.

Applications

NOTE
Depending on the grade and specification, the screen display may differ.

Select the icon on the home screen to display the Applications screen. The following information can be verified.

Top screen		Item	Function
HD Radio™ Traffic Map*		—	—
Fuel Economy Monitor		Fuel Consumption Display	Refer to Fuel Economy Monitor on page 4-71.
Vehicle Status Monitor	Warning Guidance	Warnings currently active can be verified.	Refer to If a Warning Light Turns On or Flashes on page 7-27.
	Maintenance	Scheduled Maintenance Tire Rotation Oil Change	Refer to Maintenance Monitor on page 6-15.

 *Some models.

Troubleshooting

Mazda Bluetooth® Hands-Free Customer Service

If you have any problems with Bluetooth®, contact our toll-free customer service center.

- **U.S.A.**
  Phone: 800-430-0153 (Toll-free)
  Web: www.mazdausa.com/mazdaconnect
- **Canada**
  Phone: 800-430-0153 (Toll-free)
  Web: www.mazdahandsfree.ca
- **Mexico**
  Center of Attention to Client (CAC)
  Phone: 01-800-01-MAZDA (Toll-free)
  Web: www.mazdamexico.com.mx

Bluetooth® Device pairing, connection problems

Symptom	Cause	Solution method
Unable to perform pairing	—	Make sure that the Bluetooth® device is compatible with the Bluetooth® unit, and that Bluetooth® and Find Mode*1 are on and the airplane mode is off in the Bluetooth® device setting. Turn off the power of the Bluetooth® device once, then turn it back on. If pairing is still not possible after this, contact an Authorized Mazda Dealer or Mazda Bluetooth® Hands-Free Customer Service.

Audio Set [Type B (touchscreen)]

Symptom	Cause	Solution method
Pairing cannot be performed again	The pairing information paired to the Bluetooth® unit or device is not recognized correctly.	Perform pairing using the following procedure: 1. Delete the applicable Bluetooth® device on the Mazda Connect. 2. Delete “Mazda” from the Bluetooth® search screen of the Bluetooth® device. 3. Perform pairing again. If pairing is not possible after trying the procedure, turn off the power of the Bluetooth® device once, then turn it back on. If pairing is still not possible after this, contact an Authorized Mazda Dealer or Mazda Bluetooth® Hands-Free Customer Service.
Unable to perform pairing	The Bluetooth® function and the Find Mode/Visible setting*1 on the device may turn off automatically after a period of time has elapsed depending on the device.	Check whether the Bluetooth® function and the Find Mode/Visible setting*1 on the device are turned on and pairing or reconnect.
Does not connect automatically when starting the engine		
Automatically connects, but then disconnects suddenly		
Disconnects intermittently	The device is in a location in which radio wave interference can occur easily, such as inside a bag in a rear seat, in a rear pocket of a pair of pants.	Move the device to a location in which radio wave interference is less likely to occur.
Does not connect automatically when starting the engine	The pairing information is updated when the device OS is updated.	Perform pairing using the following procedure: 1. Delete the applicable Bluetooth® device on the Mazda Connect. 2. Delete “Mazda” from the Bluetooth® search screen of the Bluetooth® device. 3. Perform pairing again. If pairing is not possible after trying the procedure, turn off the power of the Bluetooth® device once, then turn it back on. If pairing is still not possible after this, contact an Authorized Mazda Dealer or Mazda Bluetooth® Hands-Free Customer Service.

*1 Setting which detects the existence of a device external to the Bluetooth® unit.

NOTE

- *When the OS of the device is updated, the pairing information may be deleted. If this happens, reprogram the pairing information to the Bluetooth® unit.*
- *If you pair your phone which has already been paired to your vehicle more than once in the past, you need to delete "Mazda" on your mobile device. Then, execute the Bluetooth® search on your mobile device once again, and pair to a newly detected "Mazda".*
- *Before you pair your device, make sure that Bluetooth® is "ON", both on your phone and on the vehicle.*
- *If Bluetooth®-enabled devices are used in the following locations or conditions, connection via Bluetooth® may not be possible.*
  - *The device is in a location hidden from the center display such as behind or under a seat, or inside the glove compartment.*
  - *The device contacts or is covered by a metal object or body.*
  - *The device is set to power-saving mode.*
- *Different Bluetooth®-enabled devices can be used for Bluetooth® Hands-Free and Bluetooth® audio. For example, device A can be connected as a Bluetooth® Hands-Free device and device B can be connected as a Bluetooth® audio device. However, the following may occur when they are used at the same time.*
  - *The Bluetooth® connection of the device is disconnected.*
  - *Noise occurs in the Hands-Free audio.*
  - *Hands-Free operates slowly.*

Voice recognition related problems

Symptom	Cause	Solution method
Poor voice recognition	•Excessive, slow speech. •Excessive, forceful speech (shouting). •Speaking before the beep sound has ended. •Loud noise (speaking or noise from outside/inside vehicle). •Airflow from A/C is blowing against the microphone. •Speaking in off-standard expressions (dialect).	Regarding the causes indicated on the left, be careful with how you speak. In addition, when numbers are spoken in a sequence, recognition ability will improve if no stop is placed between the numbers.
False recognition of numbers		
Poor voice recognition	There is a malfunction in the microphone.	A poor connection or malfunction with the microphone may have occurred. Consult an Authorized Mazda Dealer.

Audio Set [Type B (touchscreen)]

Symptom	Cause	Solution method
Phone-related voice recognition is disabled	There is a problem with the connection between the Bluetooth® unit and the device.	If there is any malfunction after checking the pairing situation, check for device pairing or connection problems.
Names in the phonebook are not easily recognized	The Bluetooth® system is under a condition in which recognition is difficult.	By carrying out the following measures, the rate of recognition will improve. •Clear memory from the phonebook which is not used very often. •Avoid shortened names, use full names. (Recognition improves the longer the name is. By not using names such as “Mom”, “Dad”, recognition will improve.)
When operating the audio, a song name is not recognized	Song names cannot be recognized by voice.	—
You want to skip guidance	—	Guidance can be skipped by quickly pressing and releasing the talk button.

Regarding problems with calls

Symptom	Cause	Solution method
When starting a call, vehicle noise from the other party can be heard	For about 3 seconds after starting a call, the Bluetooth® unit's Noise Suppression function requires time to adapt to the call environment.	This does not indicate a problem with the device.
The other party cannot be heard or the speaker's voice is quiet	The volume is set at zero or low.	Increase the volume.

Other problems

Symptom	Cause	Solution method
The indication for the remaining battery is different between the vehicle and the device	The indication method is different between the vehicle and the device.	—
When a call is made from the vehicle, the telephone number is updated in the incoming/outgoing call record but the name does not appear	The number has not been registered into the phonebook.	If the number has been registered into the phonebook, the incoming/outgoing call record is updated by the name in the phonebook when the engine is restarted.
The cell phone does not synchronize with the vehicle regarding the incoming/outgoing call record	Some types of cell phones do not synchronize automatically.	Operate the cell phone for synchronization.

Symptom	Cause	Solution method
It takes a long time to complete the function for changing the language	A maximum of 60 seconds is required.	—

Things You Need to Know

WARNING

Always adjust the audio while the vehicle is stopped:
Do not adjust the audio control switches while driving the vehicle. Adjusting the audio while driving the vehicle is dangerous as it could distract your attention from the vehicle operation which could lead to a serious accident.
Even if the audio control switches are equipped on the steering wheel, learn to use the switches without looking down at them so that you can keep your maximum attention on the road while driving the vehicle.

CAUTION

For the purposes of safe driving, adjust the audio volume to a level that allows you to hear sounds outside of the vehicle including car horns and particularly emergency vehicle sirens.

NOTE

- *To prevent the battery from being discharged, do not leave the audio system on for a long period of time when the engine is not running.*
- *If a cellular phone or CB radio is used in or near the vehicle, it could cause noise to occur from the audio system, however, this does not indicate that the system has been damaged.*

Do not spill any liquid on the audio system.

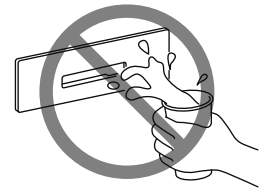

▼ Radio Reception

AM characteristics

AM signals bend around such things as buildings or mountains and bounce off the ionosphere.
Therefore, they can reach longer distances than FM signals.
Because of this, 2 stations may sometimes be picked up on the same frequency at the same time.

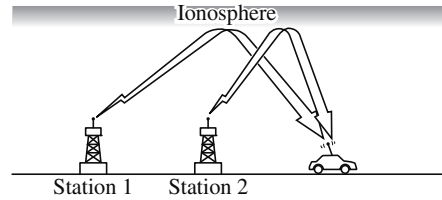

FM characteristics

An FM broadcast range is usually about 40—50 km (25—30 miles) from the source. Because of extra coding needed to break the sound into 2 channels, stereo FM has even less range than monaural (non-stereo) FM.

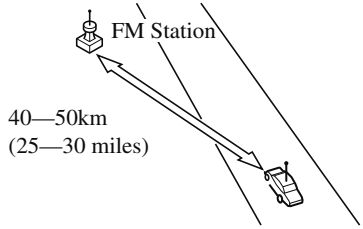

Signals from an FM transmitter are similar to beams of light because they do not bend around corners, but they do reflect. Unlike AM signals, FM signals cannot travel beyond the horizon. Therefore, FM stations cannot be received at the great distances possible with AM reception.

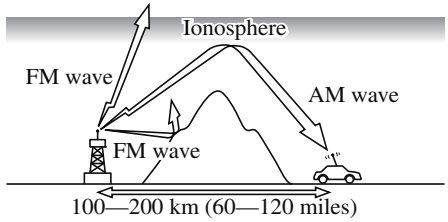

Atmospheric conditions can also affect FM reception. High humidity will cause poor reception. However, cloudy days may provide better reception than clear days.

Multipath noise

Since FM signals can be reflected by obstructions, it is possible to receive both the direct signal and the reflected signal at the same time. This causes a slight delay in reception and may be heard as a broken sound or a distortion. This problem may also be encountered when in close proximity to the transmitter.

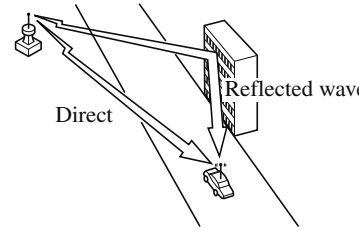

Flutter/Skip noise

Signals from an FM transmitter move in straight lines and become weak in valleys between tall buildings, mountains, and other obstacles. When a vehicle passes through such an area, the reception conditions may change suddenly, resulting in annoying noise.

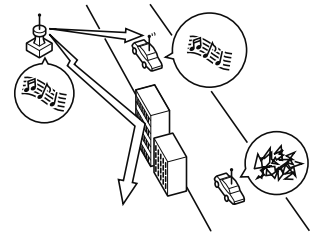

Weak signal noise

In suburban areas, broadcast signals become weak because of distance from the transmitter. Reception in such fringe areas is characterized by sound breakup.

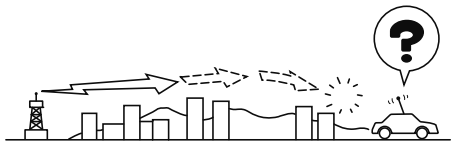

Strong signal noise

This occurs very close to a transmitter tower. The broadcast signals are extremely strong, so the result is noise and sound breakup at the radio receiver.

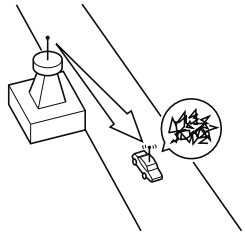

Station drift noise

When a vehicle reaches the area of 2 strong stations broadcasting at similar frequencies, the original station may be temporarily lost and the second station picked up. At this time there will be some noise from this disturbance.

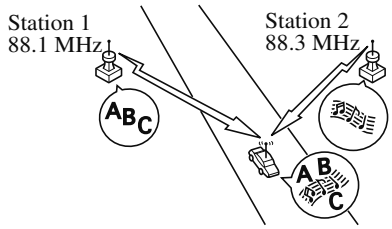

▼ Operating Tips for MP3

MP3 stands for MPEG Audio Layer 3, which is standardized voice compression established by the ISO*1 working group (MPEG).
Use of MP3 allows for audio data to be compressed to approximately a tenth of the source data size.
This unit plays files with the extension (.mp3) as MP3 files.

*1 International Organization for Standardization

⚠ CAUTION

Do not use an audio file extension on files other than audio files. In addition, do not change the audio file extension. Otherwise, the unit will not recognize the file correctly resulting in noise or a malfunction.

NOTE

Supply of this product only conveys a license for private, non-commercial use and does not convey a license nor imply any right to use this product in any commercial (i.e. revenue-generating) real time broadcasting (terrestrial, satellite, cable and/or any other media), broadcasting/streaming via the Internet, intranets and/or other networks or in other electronic content distribution systems, such as pay-audio or audio-on-demand applications. An independent license for such use is required. For details, please visit http://www.mp3licensing.com.

- When naming an MP3 file, be sure to add an MP3 file extension (.mp3) after the file name.

- The number of characters which can be displayed is restricted.

▼ Operating Tips for WMA

WMA is short for Windows Media*1 Audio and is the audio compression format used by Microsoft*1.
Audio data can be created and stored at a higher compression ratio than MP3.
This unit plays files with the extension (.wma) as WMA files.

*1 Windows Media and Microsoft are registered trademarks of Microsoft Corporation U.S. in the United States and other countries.

⚠ CAUTION

Do not use an audio file extension on files other than audio files. In addition, do not change the audio file extension. Otherwise, the unit will not recognize the file correctly resulting in noise or a malfunction.

- WMA files written under specifications other than the indicated specification may not play normally or files or folder names may not display correctly.
- The file extension may not be provided depending on the computer operating system, version, software, or settings. In this case, add the file extension ".wma" to the end of the file name, and then write it to the memory.

▼ Operating Tips for AAC

AAC stands for Advanced Audio Coding, which is standardized voice compression established by the ISO*1 working group (MPEG). Audio data can be created and stored at a higher compression ratio than MP3.
This unit plays files with the extensions (.aac*2/.m4a/.wav*2) as the AAC files.

⚠ CAUTION

Do not use an audio file extension on files other than audio files. In addition, do not change the audio file extension. Otherwise, the unit will not recognize the file correctly resulting in noise or a malfunction.

- AAC files written under specifications other than the indicated specification may not play normally or files or folder names may not display correctly.
- The file extension may not be provided depending on the computer operating system, version, software, or settings. In this case, add the file extension ".aac*2", ".m4a", or ".wav*2" to the end of the file name, and then write it to the memory.

*1 International Organization for Standardization
*2 Type B

▼ Operating Tips for OGG

OGG is the audio compression format for Xiph. Org Foundation.
Audio data can be created and stored at a higher compression ratio than MP3.
This unit plays files with the extension (.ogg) as OGG files.

⚠ CAUTION

Do not use an audio file extension on files other than audio files. In addition, do not change the audio file extension. Otherwise, the unit will not recognize the file correctly resulting in noise or a malfunction.

- OGG files written under specifications other than the indicated specification may not play normally or files or folder names may not display correctly.
- The file extension may not be provided depending on the computer operating system, version, software, or settings. In this case, add the file extension ".ogg" to the end of the file name, and then write it to the memory.

▼ Operating Tips for USB device

This unit plays audio files as follows:

Extension	Playback with this unit
.mp3	MP3
.wma	WMA
.aac*1	AAC
.m4a	
.wav*1	WAV
.ogg*1	OGG

⚠ CAUTION

Do not use an audio file extension on files other than audio files. In addition, do not change the audio file extension. Otherwise, the unit will not recognize the file correctly resulting in noise or a malfunction.

NOTE

- *Playback may not be possible depending on the type and condition of the USB flash memory even if the audio file complies with the standard.*
- *A copyright protected WMA/AAC file cannot be played in this unit.*
- ***(Type B)***
  If a file name in the USB memory is too long, it could cause operation problems such as not being able to playback the song.
  (Recommended: Within 80 characters)
- *The order of the music data stored in the device may differ from the playback order.*
- *To prevent loss or damage of stored data, we recommend that you always back up your data.*

- *If a device exceeds the maximum electric current value of 1,000 mA, it may not operate or recharge when connected.*
- *Do not pull out the USB device while in the USB mode (only pull it out while in FM/AM radio mode).*
- *The device will not operate if the data is password protected.*

MP3/WMA/AAC/OGG files written under specifications other than the indicated specification may not play normally or files/folder names may not display correctly.

*1 Type B

▼ Operating Tips for iPod

This unit supports playback of music files recorded to an iPod.

∗ iPod is a trademark of Apple Inc., registered in the U.S. and other countries.

The iPod may not be compatible depending on the model or OS version. In this case, an error message is displayed.

⚠ CAUTION

- *Remove the iPod when it is not in use. Because the iPod is not designed to withstand excessive changes in temperature inside the cabin, it could be damaged or the battery may deteriorate due to the excessive temperature or humidity inside the cabin if it is left in the vehicle.*
- *If data in the iPod is lost while it is connected to the unit, Mazda cannot guarantee recovery of any lost data.*
- *If the iPod battery is deteriorated, the iPod may not recharge and playback may not be possible when it is connected to the unit.*
- *For details on using the iPod, refer to the iPod instruction manual.*
- *When connecting the iPod to a USB port, all commands are made from the audio unit. iPod control is not possible.*

NOTE
The audio unit cannot display images or videos stored in an iPod.

Sunvisors

When you need a sunvisor, lower it for use in front or swing it to the side.

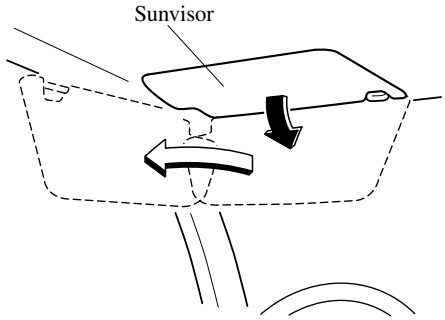

▼ Side Extension Sunvisors*

The visor extender extends the sunvisor's range of sun shading.
To use, pull it out.

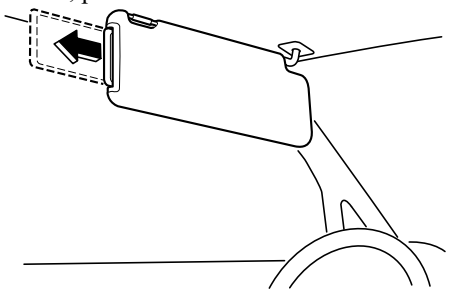

⚠ CAUTION

When moving the sunvisor, retract the visor extender to its original position. Otherwise, the visor extender could hit the rearview mirror.

▼ Vanity Mirrors

To use the vanity mirror, lower the sunvisor.

Interior Lights

NOTE
Do not leave the lights on for long periods while the engine is turned off. Otherwise, the battery power could be depleted.

Overhead Lights

Switch Position	Overhead Lights
OFF	Light off
DOOR	•Light is on when any door is open •Light is on or off when the illuminated entry system is on
ON	Light on

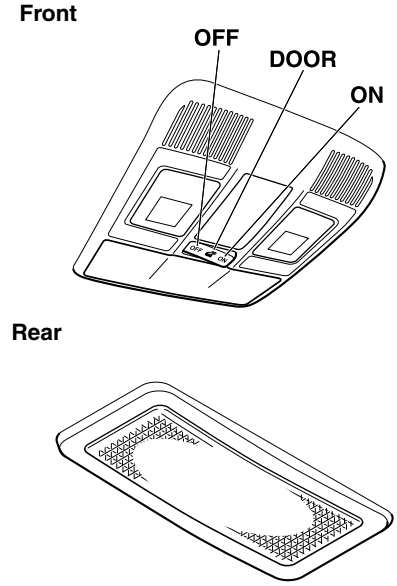

NOTE
The rear overhead light also turn on and off when the front overhead light switch is operated.

 *Some models.

Map Lights

When the overhead light switch is in the door or off position, press the lens to illuminate the map lights, and then press the lens again to turn them off.

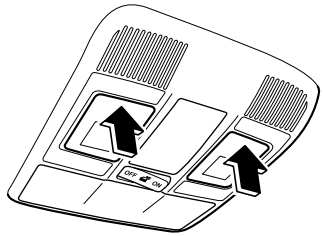

NOTE
The map lights will not turn off even if the lens is pressed in the following cases:

- *The overhead light switch is in the ON position.*
- *The overhead light switch is in the door position with the door open.*
- *The illuminated entry system is on.*

Luggage Compartment Lights

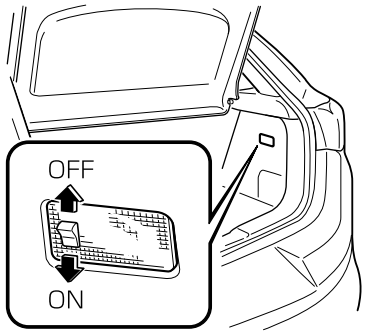

Switch Position	Luggage Compartment Light
OFF	Light off
ON	Light on when the liftgate is open

▼ Illuminated Entry System

The overhead lights turn on when any of the following operations is done with the overhead light switch in the DOOR position.

- The driver's door is unlocked with the ignition is switched OFF.
- The ignition is switched OFF with all doors closed.

NOTE

- *The illumination time differs depending on the operation.*
- ***Battery saver***
  If an interior light is left on with the ignition switched OFF, the light is turned off automatically after about 30 minutes to prevent battery depletion.
- *The operation of the illuminated entry system can be changed.*
  Refer to Personalization Features on page 9-9.

Accessory Socket

Only use genuine Mazda accessories or the equivalent requiring no greater than 120 W (DC 12 V, 10 A).
The ignition must be switched to ACC or ON.

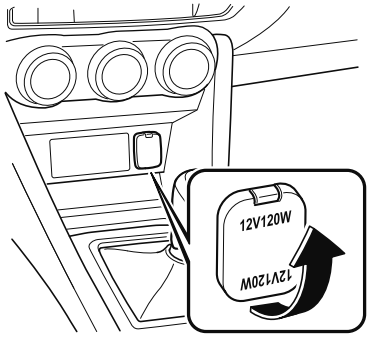

CAUTION

- *To prevent accessory socket damage or electrical failure, pay attention to the following:*
  - *Do not use accessories that require more than 120 W (DC 12 V, 10 A).*
  - *Do not use accessories that are not genuine Mazda accessories or the equivalent.*
  - *Close the cover when the accessory socket is not in use to prevent foreign objects and liquids from getting into the accessory socket.*
  - *Correctly insert the plug into the accessory socket.*
  - *Do not insert the cigarette lighter into the accessory socket.*
- *Noise may occur on the audio playback depending on the device connected to the accessory socket.*
- *Depending on the device connected to the accessory socket, the vehicle's electrical system may be affected, which could cause the warning light to illuminate. Disconnect the connected device and make sure that the problem is resolved. If the problem is resolved, disconnect the device from the socket and switch the ignition off. If the problem is not resolved, consult an Authorized Mazda Dealer.*

NOTE
To prevent discharging of the battery, do not use the socket for long periods with the engine off or idling.

Cup Holder

WARNING

Never use a cup holder to hold hot liquids while the vehicle is moving:
Using a cup holder to hold hot liquids while the vehicle is moving is dangerous. If the contents spill, you could be scalded.

▼ Front

There are two cup holders.

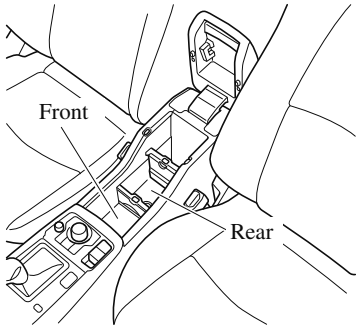

How to use the cup holder

Front

Press the button on the divider. The flap pops up to hold the drink cup in place firmly.

Rear

Pull up the armrest and press the button on the divider. The flap pops up to hold the drink cup in place firmly.

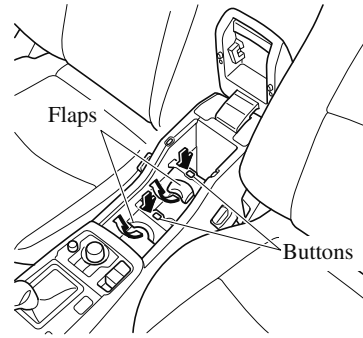

NOTE
(Rear)

- *If the divider was removed, return it to its original position.*
  Refer to Center Console on page 5-132.
- *The base plate lowers at the same time the flap pops up. Use it to hold small drink cups. When placing tall bottles such as PET drink bottles, retract the flap and the base plate.*

To retract the front/rear flaps and rear base plate

Front

To retract the flap, press down the flap.

Rear

To retract the base plate, insert a finger into the notch of the base plate and pull it up.

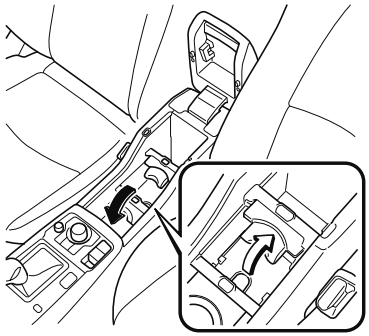

▼ Rear*

The rear cup holder is on the rear center armrest.
To use the rear seat cup holders, pull open the lids.

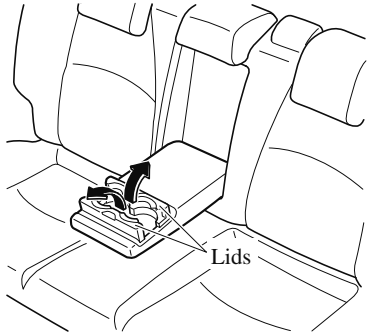

⚠ CAUTION

- *Be careful not to pinch your hand or finger when closing the cover. Otherwise, you could pinch and injure your fingers or hand.*
- *When putting a PET bottle or a tall drink cup in the cup holder, make sure it is held securely. Depending on the height and shape of the drink cup or bottle, it may not remain held in the cup holder while you are driving the vehicle.*
- *Do not close the lid or store the armrest with small items left in the cup holder. Otherwise, the items could be damaged.*

NOTE
If it is difficult to remove a PET bottle from the cup holder, press the flap with your fingers to make it easier to pull out.

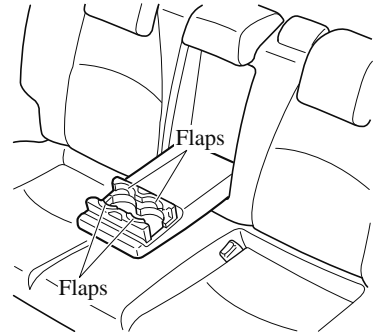

 *Some models.

Bottle Holder

Bottle holders are on the inside of the doors.

Front

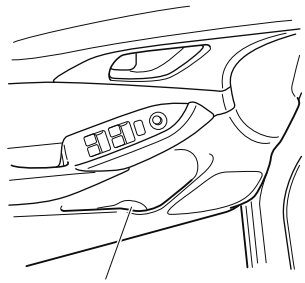

Bottle holder

Rear

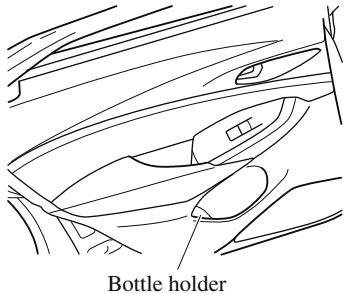

Bottle holder

CAUTION

Do not use the bottle holders for containers without caps. The contents may spill when the door is opened or closed.

Storage Compartments

WARNING

Keep storage boxes closed when driving:
Driving with the storage boxes open is dangerous. To reduce the possibility of injury in an accident or a sudden stop, keep the storage boxes closed when driving.

Do not put articles in storage spaces with no lid:
Putting articles in storage spaces with no lid is dangerous as they could be thrown around the cabin if the vehicle is suddenly accelerated and cause injury depending on how the article is stored.

CAUTION

Do not leave lighters or eyeglasses in the storage boxes while parked under the sun. A lighter could explode or the plastic material in eyeglasses could deform and crack from high temperature.

▼ Overhead Console*

This console box is designed to store eyeglasses or other accessories.
Push and release to open.

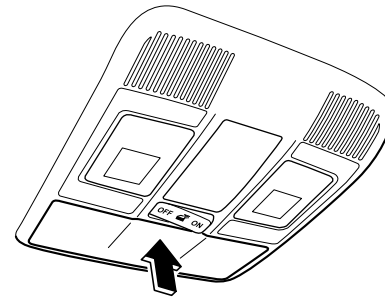

*Some models.

▼ Glove Compartment

To open the glove compartment, pull the latch toward you.

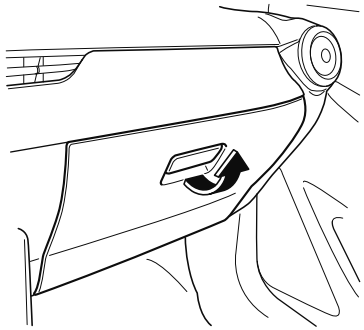

To close the glove compartment, firmly press in the center of the glove compartment lid.

▼ Center Console

The rear divider can be removed and stored.
Removing the divider provides a console box with a wider space.

1. Pull out the divider.

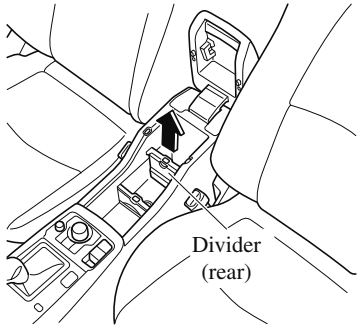

2. Insert the divider into the armrest from the top with the flap side of the divider facing the underside of the armrest, and press it in until a click sound is heard.

NOTE
To use the divider, install it in the reverse order of removal.

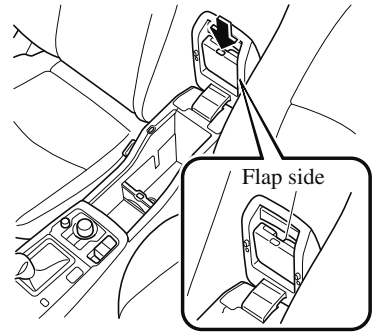

▼ Cargo Securing Loops

WARNING

Make sure luggage and cargo is secured before driving:
Not securing cargo while driving is dangerous as it could move or be crushed during sudden braking or a collision and cause injury.

Use the loops in the luggage compartment to secure cargo with a rope or net. The tensile strength of the loops is 196 N (20 kgf, 44 lbf). Do not apply excessive force to the loops as it will damage them.

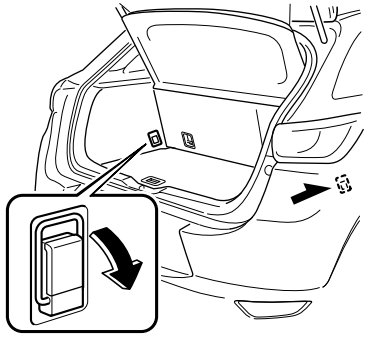

▼ Luggage Board*

When using the luggage board in the upper level

CAUTION

Make sure the luggage board is securely inserted into the grooves. Otherwise, the luggage board may detach while the vehicle is being driven or during sudden braking resulting in injury or damage to the luggage board.

Insert the luggage board into the left and right grooves.

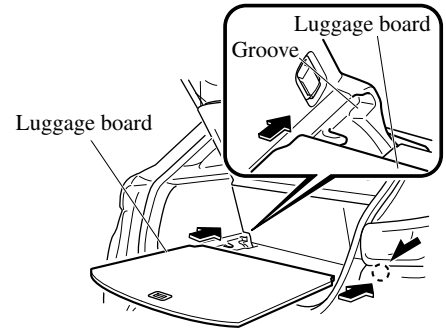

*Some models.

When using the luggage board in the lower level

By placing the luggage board on top of the luggage mat, more space is available for placing taller items.

1. Lift up the luggage board and pull it outward.

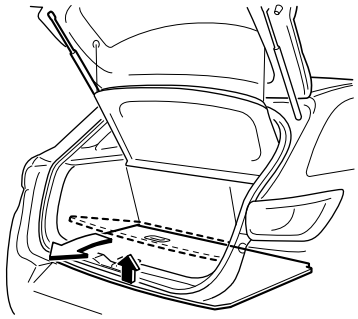

2. Place the luggage board on top of the luggage mat.

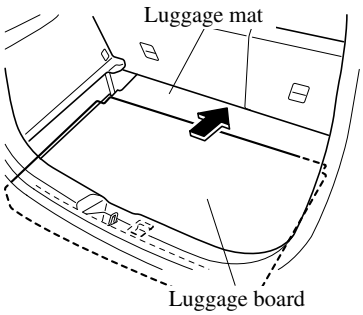

NOTE
When using the luggage board on the lower level, make sure that it is placed horizontally.
The front part of the luggage board folds up on vehicles equipped with the sub-woofer.

The luggage board can be placed horizontally by sliding it towards the vehicle front until the front part of the luggage board folds up.

▼ Rear Coat Hooks

⚠ WARNING

Never hang heavy or sharp objects on the assist grips and coat hooks:
Hanging heavy or sharp-ended objects such as a coat hanger from the assist grips or coat hooks is dangerous as they can fly off and hit an occupant in the cabin if a curtain air bag was to deploy, which could result in serious injury or death.

Always hang clothes on the coat hooks and the assist grips without hangers.

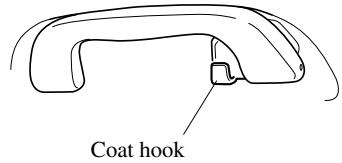

6 Maintenance and Care

How to keep your Mazda in top condition.

Essential Information.....6-2
Introduction..... 6-2

Scheduled Maintenance..... 6-4
Scheduled Maintenance (U.S.A., Canada, and Puerto Rico)..... 6-4
Scheduled Maintenance (Mexico)..... 6-10
Maintenance Monitor..... 6-15

Owner Maintenance.....6-17
Owner Maintenance Precautions..... 6-17
Hood..... 6-19
Engine Compartment Overview..... 6-21
Engine Oil.....6-22
Engine Coolant..... 6-25
Brake/Clutch Fluid..... 6-27
Window Washer Fluid..... 6-27
Body Lubrication.....6-28
Wiper Blades..... 6-29
Battery..... 6-32
Key Battery Replacement.....6-34
Tires..... 6-36
Light Bulbs..... 6-41
Fuses..... 6-48

Appearance Care.....6-54
Exterior Care..... 6-54
Interior Care.....6-60

Introduction

Be careful not to hurt yourself when inspecting your vehicle, replacing a tire, or doing some kind of maintenance such as car washing. In particular, wear thick work gloves such as cotton gloves when touching areas that are difficult to see while inspecting or working on your vehicle. Doing inspections or procedures with your bare hands could cause injury.

If you are unsure about any procedure this manual describes, we strongly urge you to have a reliable and qualified service shop perform the work, preferably an Authorized Mazda Dealer.

Factory-trained Mazda technicians and genuine Mazda parts are best for your vehicle. Without this expertise and the parts that have been designed and made especially for your Mazda, inadequate, incomplete, and insufficient servicing may result in problems. This could lead to vehicle damage or an accident and injuries.

For expert advice and quality service, consult an Authorized Mazda Dealer.

To continue warranty eligibility and to protect your investment, it is your responsibility to properly maintain your vehicle according to factory recommended schedules outlined in this manual. As part of this you must keep your maintenance records, receipts, repair orders and any other documents as evidence this maintenance was performed. You must present these documents, should any warranty coverage disagreement occur. Failure to do so can result in your warranty being voided either in whole or in part.

This evidence may consist of the following:

- The Mazda Scheduled Maintenance Record, refer to the Warranty Booklet, must be completely filled out showing mileage, repair order number, date for each service, and signed by a qualified automotive service technician who service vehicles.
- Original copies of repair orders or other receipts that include the mileage and date the vehicle was serviced. Each receipt should be signed by a qualified automotive service technician.
- For self maintenance, a statement that you completed the maintenance yourself, displaying mileage and the date the work was performed. Also, receipts for the replacement parts (fluid, filters, etc.) indicating the date and mileage must accompany this statement.

NOTE
If you elect to perform maintenance yourself or have your vehicle serviced at a location other than an Authorized Mazda Dealer, Mazda requires that all fluids, parts and materials must meet Mazda standards for durability and performance as described in this manual.

Claims against the warranty resulting from lack of maintenance, as opposed to defective materials or authorized Mazda workmanship, will not be honored.

Any auto repair shop using parts equivalent to your Mazda's original equipment may perform maintenance. **But we recommend that it always be done by an Authorized Mazda Dealer using genuine Mazda parts.**
Selecting “Maintenance Monitor” enables the system to notify you of your vehicle's approaching inspection/servicing period (page 6-15).

The malfunction diagnosis connector is designed exclusively for connecting the specially designed device to perform on-board diagnosis.
Do not connect any devices other than the specially designed malfunction diagnosis devices for servicing. If any device other than the malfunction diagnosis device is connected, it may affect the vehicle's electrical devices or lead to damage such as battery depletion.

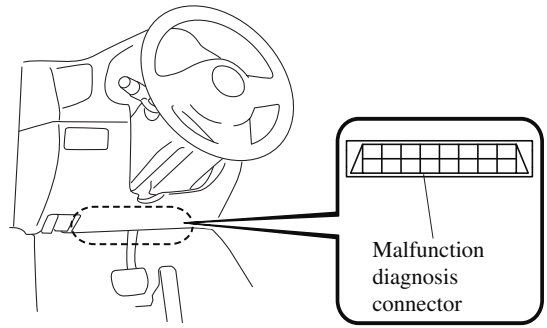

Scheduled Maintenance (U.S.A., Canada, and Puerto Rico)

Follow Schedule 1 if the vehicle is operated mainly where none of the following conditions (severe driving conditions)apply.

- Repeated short-distance driving
- Driving in dusty conditions
- Driving with extended use of brakes
- Driving in areas where salt or other corrosive materials are used
- Driving on rough or muddy roads
- Extended periods of idling or low-speed operation
- Driving for long periods in cold temperatures or extremely humid climates
- Driving in extremely hot conditions
- Driving in mountainous conditions continually

If any do apply, follow Schedule 2. (Canada residents follow Schedule 2.)

Vehicles using Engine Oil Flexible Maintenance

Engine Oil Flexible Maintenance is selected by default for U.S.A. and Puerto Rico residents.

If any following conditions do apply, follow Schedule 2 with engine oil fixed maintenance.

- Extended periods of idling or low-speed operation such as police car, taxi or driving school car
- Driving in dusty conditions

The vehicle calculates the remaining oil life based on engine operating conditions. The vehicle lets you know when an oil change is due by illuminating the wrench indicator light in the instrument cluster. Change the oil as soon as possible within the next 1,000 km (600 mile) or 15 days. Refer to Maintenance Monitor on page 6-15 for the details.

NOTE

- *Please ensure that the Flexible Oil Maintenance Setting is reset after each Oil and Filter replacement.*
- *For maintenance guidelines beyond the miles/months listed, follow the maintenance intervals provided in the Scheduled Maintenance Tables.*

▼ Schedule 1

U.S.A. and Puerto Rico residents - Engine oil flexible maintenance interval

Use when the maintenance monitor for "Oil Change" is set to "Flexible". For details, see maintenance monitor. (page 6-15)

Maintenance Interval	Number of months or kilometers (miles), whichever comes first.							
	Months	12	24	36	48	60	72	84	96
	×1000 km	12	24	36	48	60	72	84	96
	×1000 miles	7.5	15	22.5	30	37.5	45	52.5	60
Drive belts				I			I		
Engine oil & filter*1		Replace when wrench indicator light is ON. (Max interval:12 months or 12,000 km (7,500 miles))							
Engine coolant*2		Replace at first 192,000 km (120,000 miles) or 10 years; after that, every 96,000 km (60,000 miles) or 5 years.							
Air filter				R			R		
Fuel lines and hoses*3			I		I		I		I
Hoses and tubes for emission*3					I				I
Spark plugs		Replace every 120,000 km (75,000 miles).							
Brake lines, hoses and connections			I		I		I		I
Disc brakes		I	I	I	I	I	I	I	I
Tire (Rotation)		Rotate every 12,000 km (7,500 miles).							
Steering operation and linkages			I		I		I		I
Front and rear suspension, ball joints and wheel bearing axial play			I		I		I		I
Rear differential oil		*4*5							
Transfer oil		*5							
Driveshaft dust boots			I		I		I		I
Bolts and nuts on chassis and body			T		T		T		T
Exhaust system and heat shields						I			
Emergency flat tire repair kit (if installed)*6		Inspect annually.							
Cabin air filter			R		R		R		R

Chart symbols:

I: Inspect: Inspect and clean, repair, adjust, fill up, or replace if necessary.
R: Replace
L: Lubricate
C: Clean
T: Tighten
D: Drain

Remarks:

*1 The engine oil and filter must be changed at least once a year or within 12,000 km (7,500 miles) since last engine oil and filter change. Reset the engine oil data whenever replacing the engine oil regardless of the message/wrench indicator light display.

*2 Use of FL-22 is recommended when replacing engine coolant. Using engine coolant other than FL-22 may cause serious damage to the engine and cooling system.

*3 According to state/provincial and federal regulations, failure to perform maintenance on these items will not void your emissions warranties. However, Mazda recommends that all maintenance services be performed at the recommended time or mileage/kilometer period to ensure long-term reliability.

*4 If the vehicle is operated primarily under any of the following conditions, replace the rear differential oil at every 48,000 km (30,000 miles).
a) Towing a trailer or using a car-top carrier
b) Driving in dusty, sandy or wet conditions
c) Extended periods of idling or low speed operation
d) Repeated short trips of less than 16 km (10 miles)

*5 If this component has been submerged in water, the oil should be replaced.

*6 Check the tire repair fluid expiration date every year when performing the periodic maintenance. Replace the tire repair fluid bottle with new one before the expiration date.

▼ Schedule 2

U.S.A. and Puerto Rico residents - Severe driving conditions maintenance interval

Maintenance Interval		Number of months or kilometers (miles), whichever comes first.											
	Months	6	12	18	24	30	36	42	48	54	60	66	72
	×1000 km	8	16	24	32	40	48	56	64	72	80	88	96
	×1000 miles	5	10	15	20	25	30	35	40	45	50	55	60
Drive belts					I				I				I
Engine oil & filter	Flexible*1	Replace when wrench indicator light is ON. (Max interval:12 months or 12,000 km (7,500 miles))											
	Fixed	R	R	R	R	R	R	R	R	R	R	R	R
Engine coolant*2		Replace at first 192,000 km (120,000 miles) or 10 years; after that, every 96,000 km (60,000 miles) or 5 years.											
Engine coolant level		I	I	I	I	I	I	I	I	I	I	I	I
Air filter*3							R						R
Fuel lines and hoses*4				I			I			I			I
Hoses and tubes for emission*4							I						I
Spark plugs		Replace every 120,000 km (75,000 miles).											
Function of all lights		I	I	I	I	I	I	I	I	I	I	I	I
Brake lines, hoses and connections				I			I			I			I
Brake and clutch fluid level		I	I	I	I	I	I	I	I	I	I	I	I
Disc brakes		I	I	I	I	I	I	I	I	I	I	I	I
Tire (Rotation)		Rotate every 8,000 km (5,000 miles).											
Tire inflation pressure and tire wear		I	I	I	I	I	I	I	I	I	I	I	I

Maintenance Interval	Number of months or kilometers (miles), whichever comes first.											
	Months	6	12	18	24	30	36	42	48	54	60	66	72
	×1000 km	8	16	24	32	40	48	56	64	72	80	88	96
	×1000 miles	5	10	15	20	25	30	35	40	45	50	55	60
Steering operation and linkages				I			I			I			I
Front and rear suspension, ball joints and wheel bearing axial play				I			I			I			I
Rear differential oil	*5*6												
Transfer oil	*6												
Driveshaft dust boots				I			I			I			I
Bolts and nuts on chassis and body				T			T			T			T
Exhaust system and heat shields								I					
All locks and hinges	L	L	L	L	L	L	L	L	L	L	L	L	L
Washer fluid level	I	I	I	I	I	I	I	I	I	I	I	I	I
Emergency flat tire repair kit (if installed)*7	Inspect annually.												
Cabin air filter	Replace every 40,000 km (25,000 miles) or 2 years.												

Chart symbols:

I: Inspect: Inspect and clean, repair, adjust, fill up, or replace if necessary.
R: Replace
L: Lubricate
C: Clean
T: Tighten
D: Drain

Remarks:

*1 Engine oil flexible maintenance is available for U.S.A. and Puerto Rico residents whose vehicle is operated mainly where none of the following conditions apply.

- Extended periods of idling or low-speed operation such as police car, taxi or driving school car
- Driving in dusty conditions

If any do apply, follow fixed maintenance.
The engine oil and filter must be changed at least once a year or within 12,000 km (7,500 miles) since last engine oil and filter change. Reset the engine oil data whenever replacing the engine oil regardless of the message/wrench indicator light display.

*2 Use of FL-22 is recommended when replacing engine coolant. Using engine coolant other than FL-22 may cause serious damage to the engine and cooling system.

*3 If the vehicle is operated in very dusty or sandy areas, clean and if necessary, replace the air filter more often than the recommended intervals.

*4 According to state/provincial and federal regulations, failure to perform maintenance on these items will not void your emissions warranties. However, Mazda recommends that all maintenance services be performed at the recommended time or mileage/kilometer period to ensure long-term reliability.

*5 If the vehicle is operated primarily under any of the following conditions, replace the rear differential oil at every 48,000 km (30,000 miles).
a) Towing a trailer or using a car-top carrier
b) Driving in dusty, sandy or wet conditions

c) Extended periods of idling or low speed operation
d) Repeated short trips of less than 16 km (10 miles)

*6 If this component has been submerged in water, the oil should be replaced.

*7 Check the tire repair fluid expiration date every year when performing the periodic maintenance. Replace the tire repair fluid bottle with new one before the expiration date.

Canada residents

Maintenance Interval	Number of months or kilometers (miles), whichever comes first.											
	Months	**6**	**12**	**18**	**24**	**30**	**36**	**42**	**48**	**54**	**60**	**66**	**72**
	×1000 km	**8**	**16**	**24**	**32**	**40**	**48**	**56**	**64**	**72**	**80**	**88**	**96**
	×1000 miles	**5**	**10**	**15**	**20**	**25**	**30**	**35**	**40**	**45**	**50**	**55**	**60**
Drive belts							I						I
Engine oil & filter		R	R	R	R	R	R	R	R	R	R	R	R
Engine coolant*1		Replace at first 192,000 km (120,000 miles) or 10 years; after that, every 96,000 km (60,000 miles) or 5 years.											
Engine coolant level		I	I	I	I	I	I	I	I	I	I	I	I
Air filter		I	I	I	I	I	I	I	I	I	I	I	I
		Replace every 56,000 km (35,000 miles) or 3 years.											
Fuel lines and hoses*2					I				I				I
Hoses and tubes for emission*2									I				
Spark plugs		Replace every 120,000 km (75,000 miles).											
Function of all lights		I	I	I	I	I	I	I	I	I	I	I	I
Brake lines, hoses and connections					I				I				I
Brake and clutch fluid level		I	I	I	I	I	I	I	I	I	I	I	I
Disc brakes		Inspect every 24,000 km (15,000 miles) or 1 years.											
Tire (Rotation)		Rotate every 8,000 km (5,000 miles).											
Tire inflation pressure and tire wear		I	I	I	I	I	I	I	I	I	I	I	I
Steering operation and linkages					I				I				I
Front and rear suspension, ball joints and wheel bearing axial play					I				I				I
Rear differential oil		*3*4											
Transfer oil		*4											
Driveshaft dust boots					I				I				I
Bolts and nuts on chassis and body					T				T				T
Exhaust system and heat shields		Inspect every 72,000 km (45,000 miles) or 5 years.											
All locks and hinges		L	L	L	L	L	L	L	L	L	L	L	L
Washer fluid level		I	I	I	I	I	I	I	I	I	I	I	I
Emergency flat tire repair kit (if installed)*5		Inspect annually.											
Cabin air filter		Replace every 40,000 km (25,000 miles) or 2 years.											

Chart symbols:

I: Inspect: Inspect and clean, repair, adjust, fill up, or replace if necessary.
R: Replace
L: Lubricate
C: Clean
T: Tighten
D: Drain

Remarks:

*1 Use of FL-22 is recommended when replacing engine coolant. Using engine coolant other than FL-22 may cause serious damage to the engine and cooling system.

*2 According to state/provincial and federal regulations, failure to perform maintenance on these items will not void your emissions warranties. However, Mazda recommends that all maintenance services be performed at the recommended time or mileage/kilometer period to ensure long-term reliability.

*3 If the vehicle is operated primarily under any of the following conditions, replace the rear differential oil at every 48,000 km (30,000 miles).
a) Towing a trailer or using a car-top carrier
b) Driving in dusty, sandy or wet conditions
c) Extended periods of idling or low speed operation
d) Repeated short trips of less than 16 km (10 miles)

*4 If this component has been submerged in water, the oil should be replaced.

*5 Check the tire repair fluid expiration date every year when performing the periodic maintenance. Replace the tire repair fluid bottle with new one before the expiration date.

Scheduled Maintenance (Mexico)

Follow Schedule 1 if the vehicle is operated mainly where none of the following conditions (severe driving conditions) apply.

- Repeated short-distance driving
- Driving in dusty conditions
- Driving with extended use of brakes
- Driving in areas where salt or other corrosive materials are used
- Driving on rough or muddy roads
- Extended periods of idling or low-speed operation
- Driving for long periods in cold temperatures or extremely humid climates
- Driving in extremely hot conditions
- Driving in mountainous conditions continually

If any do apply, follow Schedule 2.

NOTE
For maintenance guidelines beyond the kilometers/months listed, follow the maintenance intervals provided in the Scheduled Maintenance Tables.

▼ Schedule 1

Maintenance Interval	Number of months or kilometers, whichever comes first												
	Months	6	12	18	24	30	36	42	48	54	60	66	72
	×1000 km	10	20	30	40	50	60	70	80	90	100	110	120
Drive belts					I				I				I
Engine oil & filter		R	R	R	R	R	R	R	R	R	R	R	R
Cooling system					I				I				I
Engine coolant*1		Replace at first 200,000 km or 10 years; after that, every 100,000 km or 5 years											
Air filter			R		R		R		R		R		R
Fuel lines and hoses					I*2				I*2				I
Hoses and tubes for emission					I*2				I*2				I
Fuel filter		Replace every 60,000 km											
Spark plugs		I	I	I	I	I	I	I	I	I	I	I	I
		Replace every 120,000 km											
Brake lines, hoses and connections			I		I		I		I		I		I
Brake and clutch fluid level		I	I	I		I	I	I		I	I	I	
Brake fluid					R				R				R
Disc brakes		I	I	I	I	I	I	I	I	I	I	I	I
Tire (Rotation)		Rotate every 10,000 km											

Maintenance Interval	Number of months or kilometers, whichever comes first												
	Months	6	12	18	24	30	36	42	48	54	60	66	72
	×1000 km	10	20	30	40	50	60	70	80	90	100	110	120
Tire inflation pressure and tire wear		I	I	I	I	I	I	I	I	I	I	I	I
Steering operation and linkages		I	I	I	I	I	I	I	I	I	I	I	I
Front and rear suspension, ball joints and wheel bearing axial play			I		I		I		I		I		I
Rear differential oil		*3*4											
Transfer oil		*4											
Driveshaft dust boots			I		I		I		I		I		I
Bolts and nuts on chassis and body			T		T		T		T		T		T
Exhaust system and heat shields			I		I		I		I		I		I
All locks and hinges		L	L	L	L	L	L	L	L	L	L	L	L
Washer fluid level		I	I	I	I	I	I	I	I	I	I	I	I
Emergency flat tire repair kit (if installed)*5		Inspect annually.											
Cabin air filter					R				R				R

Chart symbols:

I: Inspect: Inspect and clean, repair, adjust, fill up, or replace if necessary.
R: Replace
L: Lubricate
C: Clean
T: Tighten
D: Drain

Remarks:

*1 Use of FL-22 is recommended when replacing engine coolant. Using engine coolant other than FL-22 may cause serious damage to the engine and cooling system.

*2 According to state/provincial and federal regulations, failure to perform maintenance on these items will not void your emissions warranties. However, Mazda recommends that all maintenance services be performed at the recommended time or kilometer period to ensure long-term reliability.

*3 If the vehicle is operated primarily under any of the following conditions, replace the rear differential oil at every 45,000 km.
a) Towing a trailer or using a car-top carrier
b) Driving in dusty, sandy or wet conditions
c) Extended periods of idling or low speed operation
d) Repeated short trips of less than 16 km

*4 If this component has been submerged in water, the oil should be replaced.

*5 Check the tire repair fluid expiration date every year when performing the periodic maintenance. Replace the tire repair fluid bottle with new one before the expiration date.

Scheduled Maintenance

▼ Schedule 2

Maintenance Interval	Number of months or kilometers, whichever comes first												
	Months	3	6	9	12	15	18	21	24	27	30	33	36
	×1000 km	5	10	15	20	25	30	35	40	45	50	55	60
Drive belts									I				
Engine oil & filter		R	R	R	R	R	R	R	R	R	R	R	R
Cooling system									I				
Engine coolant*1		Replace at first 200,000 km or 10 years; after that, every 100,000 km or 5 years											
Engine coolant level		I	I	I	I	I	I	I	I	I	I	I	I
Air filter			C		R		C		R		C		R
Fuel lines and hoses									I*2				
Hoses and tubes for emission									I*2				
Fuel filter		Replace every 60,000 km											
Spark plugs			I		I		I		I		I		I
		Replace every 120,000 km											
Function of all lights		I	I	I	I	I	I	I	I	I	I	I	I
Brake lines, hoses and connections					I				I				I
Brake and clutch fluid level			I		I		I				I		I
Brake fluid									R				
Disc brakes			I		I		I		I		I		I
Tire (Rotation)		Rotate every 10,000 km											
Tire inflation pressure and tire wear			I		I		I		I		I		I
Steering operation and linkages			I		I		I		I		I		I
Front and rear suspension, ball joints and wheel bearing axial play					I				I				I
Rear differential oil		*3*4											
Transfer oil		*4											
Driveshaft dust boots					I				I				I
Bolts and nuts on chassis and body					T				T				T
Exhaust system and heat shields					I				I				I
All locks and hinges			L		L		L		L		L		L
Washer fluid level			I		I		I		I		I		I
Emergency flat tire repair kit (if installed)*5		Inspect annually.											
Cabin air filter					R				R				R

Chart symbols:

I: Inspect: Inspect and clean, repair, adjust, fill up, or replace if necessary.
R: Replace

L: Lubricate
C: Clean
T: Tighten
D: Drain

Remarks:

*1 Use of FL-22 is recommended when replacing engine coolant. Using engine coolant other than FL-22 may cause serious damage to the engine and cooling system.
*2 According to state/provincial and federal regulations, failure to perform maintenance on these items will not void your emissions warranties. However, Mazda recommends that all maintenance services be performed at the recommended time or kilometer period to ensure long-term reliability.
*3 If the vehicle is operated primarily under any of the following conditions, replace the rear differential oil at every 45,000 km.
a) Towing a trailer or using a car-top carrier
b) Driving in dusty, sandy or wet conditions
c) Extended periods of idling or low speed operation
d) Repeated short trips of less than 16 km
*4 If this component has been submerged in water, the oil should be replaced.
*5 Check the tire repair fluid expiration date every year when performing the periodic maintenance. Replace the tire repair fluid bottle with new one before the expiration date.

(Cont.)

Maintenance Interval	Number of months or kilometers, whichever comes first												
	Months	39	42	45	48	51	54	57	60	63	66	69	72
	×1000 km	65	70	75	80	85	90	95	100	105	110	115	120
Drive belts					I								I
Engine oil & filter		R	R	R	R	R	R	R	R	R	R	R	R
Cooling system					I								I
Engine coolant*1		Replace at first 200,000 km or 10 years; after that, every 100,000 km or 5 years											
Engine coolant level		I	I	I	I	I	I	I	I	I	I	I	I
Air filter			C		R		C		R		C		R
Fuel lines and hoses					I*2								I
Hoses and tubes for emission					I*2								I
Fuel filter		Replace every 60,000 km											
Spark plugs			I		I		I		I		I		I
		Replace every 120,000 km											
Function of all lights		I	I	I	I	I	I	I	I	I	I	I	I
Brake lines, hoses and connections					I				I				I
Brake and clutch fluid level			I				I		I		I		
Brake fluid					R								R
Disc brakes			I		I		I		I		I		I
Tire (Rotation)		Rotate every 10,000 km											

Scheduled Maintenance

Maintenance Interval	Number of months or kilometers, whichever comes first												
	Months	39	42	45	48	51	54	57	60	63	66	69	72
	×1000 km	65	70	75	80	85	90	95	100	105	110	115	120
Tire inflation pressure and tire wear			I		I		I		I		I		I
Steering operation and linkages			I		I		I		I		I		I
Front and rear suspension, ball joints and wheel bearing axial play					I				I				I
Rear differential oil	*3*4												
Transfer oil	*4												
Driveshaft dust boots					I				I				I
Bolts and nuts on chassis and body					T				T				T
Exhaust system and heat shields					I				I				I
All locks and hinges			L		L		L		L		L		L
Washer fluid level			I		I		I		I		I		I
Emergency flat tire repair kit (if installed)*5	Inspect annually.												
Cabin air filter					R				R				R

Chart symbols:

I: Inspect: Inspect and clean, repair, adjust, fill up, or replace if necessary.
R: Replace
L: Lubricate
C: Clean
T: Tighten
D: Drain

Remarks:

*1 Use of FL-22 is recommended when replacing engine coolant. Using engine coolant other than FL-22 may cause serious damage to the engine and cooling system.

*2 According to state/provincial and federal regulations, failure to perform maintenance on these items will not void your emissions warranties. However, Mazda recommends that all maintenance services be performed at the recommended time or kilometer period to ensure long-term reliability.

*3 If the vehicle is operated primarily under any of the following conditions, replace the rear differential oil at every 45,000 km.
a) Towing a trailer or using a car-top carrier
b) Driving in dusty, sandy or wet conditions
c) Extended periods of idling or low speed operation
d) Repeated short trips of less than 16 km

*4 If this component has been submerged in water, the oil should be replaced.

*5 Check the tire repair fluid expiration date every year when performing the periodic maintenance. Replace the tire repair fluid bottle with new one before the expiration date.

Maintenance Monitor

▼ Maintenance Monitor (Type A audio)

“Oil Change” with a flexible setting*1 is available. Consult your Authorized Mazda Dealer when you want to change the setting*2. Once the system turns on, the wrench indicator light in the instrument cluster will be illuminated when remaining oil life becomes less than 1,000 km (600 mile), or remaining days are less than 15 (whichever comes first).

Reset method

Press and hold the selector with the ignition switched off, then switch it on. Keep pressing the selector for more than 5 seconds. The master warning light will flash for a few seconds when the reset is completed.

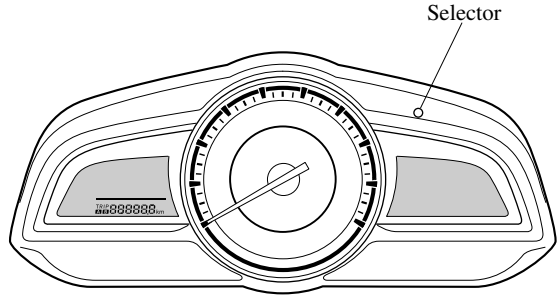

*1 The flexible setting is available in the United States and Puerto Rico. Based on the engine operating conditions, the onboard computer in your vehicle calculates the remaining oil life. Mazda Genuine 0W-20 oil and Castrol® 0W-20 oil are required to achieve optimum calculation performance.

*2 Once the Flexible Oil Maintenance Setting is selected, the system must be reset whenever replacing the engine oil.

▼ Maintenance Monitor (Type B audio)

1. Select the icon on the home screen to display the “Applications” screen.
2. Select “Vehicle Status Monitor”.
3. Select “Maintenance” to display the maintenance list screen.
4. Switch the tab and select the setting item you want to change.

Scheduled Maintenance

You can customize settings in the setup display as follows:

Tab	Item	Explanation
Scheduled	Setting	Notification can be switched on/off.
	Time (months)	Displays the time or distance until maintenance is due. Select this item to set the maintenance period. The wrench indication/indicator light in the instrument cluster will be illuminated when the remaining distance is less than 1,000 km or 600 mile, or the remaining number of days is less than 15 (whichever comes first).
	Distance (km or mile)	
	Reset	Resets the time and distance to the initial values. Once the system turns on, it needs to be reset whenever carrying out maintenance.
Tire Rotation	Setting	Notification can be switched on/off.
	Distance (km or mile)	Displays the distance until tire rotation is due. Select this item to set the tire rotation distance. The wrench indication/indicator light in the instrument cluster will be illuminated when the remaining distance is less than 1,000 km or 600 mile.
	Reset	Resets the remaining distance to the initial value. Once the system turns on, it needs to be reset whenever rotating the tires.
Oil Change	Setting Interval	Oil replacement period can be selected from the flexible setting or fixed setting, or it can be set to non-display. The flexible setting is available only in the United States and Puerto Rico. Once engine oil flexible maintenance is selected, the vehicle calculates the remaining oil life based on the engine operating conditions. The vehicle lets you know when an oil change is due by illuminating the wrench indicator light in the instrument cluster. Mazda Genuine 0W-20 oil and Castrol® 0W-20 oil are required to achieve optimum performance.
	Distance (km or mile) (Displays only in fixed setting)	Displays the distance until the oil replacement is due. Select this item to set the oil replacement distance. The wrench indication/indicator light in the instrument cluster will be illuminated when the remaining distance is less than 1,000 km or 600 mile.
	Oil life (km or mile) (Displays only in flexible setting)	Displays the engine oil life until the oil replacement is due. The wrench indication/indicator light in the instrument cluster will be illuminated when the remaining oil life distance is less than 1,000 km or 600 mile.
	Reset	Resets the remaining distance to the initial value. Once the system turns on, it needs to be reset whenever replacing the engine oil.

Owner Maintenance Precautions

The owner or a qualified service technician should make these vehicle inspections at the indicated intervals to ensure safe and dependable operation.

Bring any problem to the attention of an Authorized Mazda Dealer or qualified service technician as soon as possible.

When Refueling

- Brake and clutch fluid level (page 6-27)
- Engine coolant level (page 6-25)
- Engine oil level (page 6-25)
- Washer fluid level (page 6-27)

At Least Monthly

- Tire inflation pressures (page 6-36)

At Least Twice a Year (For Example, Every Spring and Fall)

You can do the following scheduled maintenance items if you have some mechanical ability and a few basic tools and if you closely follow the directions in this manual.

- Engine coolant (page 6-25)
- Engine oil (page 6-22)

Improper or incomplete service may result in problems. This section gives instructions only for items that are easy to perform.

As explained in the Introduction (page 6-2), several procedures can be done only by a qualified service technician with special tools.

Improper owner maintenance during the warranty period may affect warranty coverage. Refer to Introduction (page 6-2) for owner's responsibility in protecting your investment. For details, read the separate Mazda Warranty statement provided with the vehicle. If you are unsure about any servicing or maintenance procedure, have it done by an Authorized Mazda Dealer.

There are strict environmental laws regarding the disposal of waste oil and fluids. Please dispose of your waste properly and with due regard to the environment.

We recommend that you entrust the oil and fluid changes of your vehicle to an Authorized Mazda Dealer.

WARNING

Do not perform maintenance work if you lack sufficient knowledge and experience or the proper tools and equipment to do the work. Have maintenance work done by a qualified technician:
Performing maintenance work on a vehicle is dangerous if not done properly. You can be seriously injured while performing some maintenance procedures.

If you must run the engine while working under the hood, make certain that you remove all jewelry (especially rings, bracelets, watches, and necklaces) and all neckties, scarves, and similar loose clothing before getting near the engine or cooling fan which may turn on unexpectedly:
Working under the hood with the engine running is dangerous. It becomes even more dangerous when you wear jewelry, loose clothing or have long hair or a long beard.
Either can become entangled in moving parts and result in injury.

Pull over to a safe location, then switch the ignition off and make sure the fan is not running before attempting to work near the cooling fan:
Working near the cooling fan when it is running is dangerous. The fan could continue running indefinitely even if the engine has stopped and the engine compartment temperature is high.
You could be hit by the fan and seriously injured.

Do not leave items in the engine compartment:
After you have finished checking or doing servicing in the engine compartment, do not forget and leave items such as tools or rags in the engine compartment.
Tools or other items left in the engine compartment could cause engine damage or a fire leading to an unexpected accident.

Hood

WARNING

Always check that the hood is closed and securely locked:
A hood that is not closed and securely locked is dangerous as it could fly open while the vehicle is moving and block the driver's vision which could result in a serious accident.

▼ Opening the Hood

1. With the vehicle parked, pull the release handle to unlock the hood.

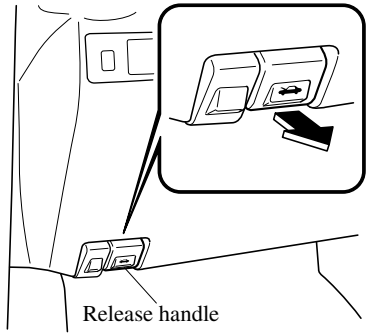

2. Insert your hand into the hood opening, slide the latch lever to the right, and lift up the hood.

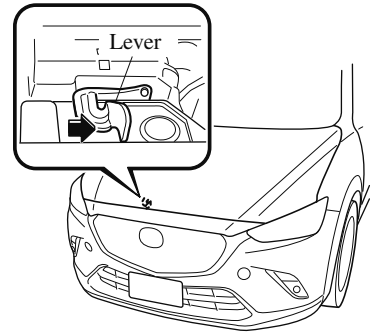

NOTE
The lever is located a little to the left of center when facing the vehicle.

3. Grasp the support rod in the padded area and secure it in the support rod hole indicated by the arrow to hold the hood open.

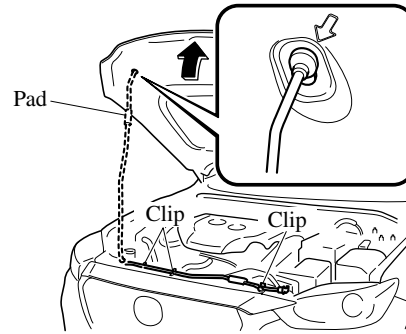

▼ Closing the Hood

1. Check under the hood area to make certain all filler caps are in place and all loose items (e.g. tools, oil containers, etc.) have been removed.
2. Lift the hood, grasp the padded area on the support rod, and secure the support rod in the clip. Verify that the support rod is secured in the clip before closing the hood.

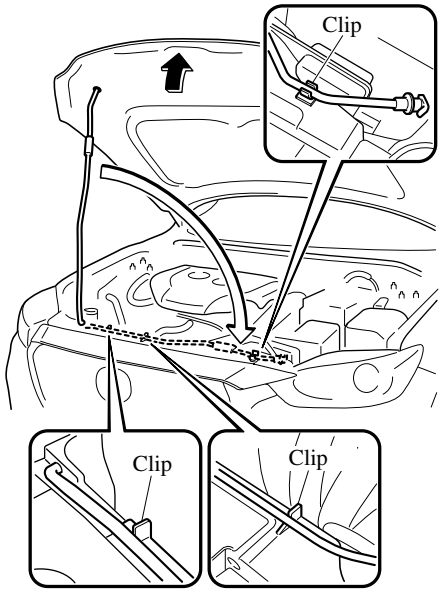

3. Lower the hood slowly to a height of about 20 cm (7.9 in) above its closed position and then let it drop.

⚠ CAUTION

When closing the hood, do not push it excessively such as by applying your weight. Otherwise, the hood could be deformed.

Engine Compartment Overview

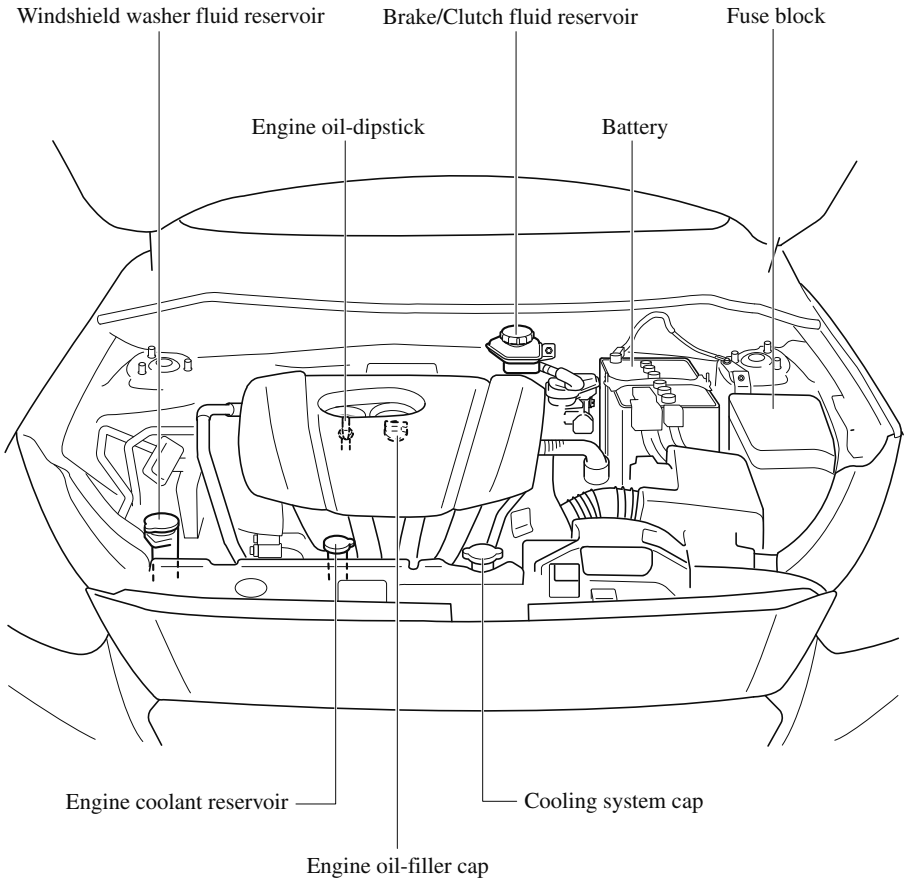

Engine Oil

NOTE
Changing the engine oil should be performed by an Authorized Mazda Dealer.
Refer to Introduction (page 6-2) for owner's responsibility in protecting your investment.

▼ Recommended Oil

U.S.A., Canada, and Puerto Rico

Use SAE 0W-20 engine oil.
Mazda Genuine Oil is used in your Mazda vehicle. Mazda Genuine 0W-20 Oil is required to achieve optimum fuel economy.

For maintenance service, Mazda recommends Mazda Genuine Parts and Castrol® (U.S.A. only).

(ILSAC)

Only use SAE 0W-20 oil "Certified For Gasoline Engines" by the American Petroleum Institute (API).
Oil with this trademark symbol conforms to the current engine and emission system protection standards and fuel economy requirements of the International Lubricant Standardization and Approval Committee (ILSAC), comprised of U.S. and Japanese automobile manufacturers.

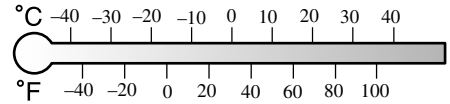

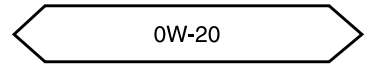

Except U.S.A., Canada, and Puerto Rico

Use SAE 5W-30 engine oil.
Oil container labels provide important information.
A chief contribution this type of oil makes to fuel economy is reducing the amount of fuel necessary to overcome engine friction.

For maintenance service, Mazda recommends Mazda Genuine Parts and Castrol® (Mexico only).

(ILSAC)

(Mexico)
Use SAE 5W-30 engine oil. If SAE 5W-30 engine oil is not available, use SAE 5W-20 engine oil.

The quality designation SM, or ILSAC must be on the label.

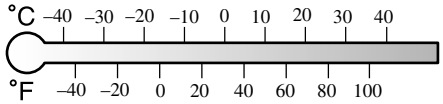

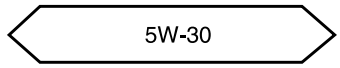

▼ Vehicle Engine Control Unit Reset Procedure

NOTE
This procedure is intended for vehicles with the engine oil flexible maintenance setting selected.

After replacing the engine oil, have a repair shop such as an Authorized Mazda Dealer perform the initialization (engine oil data resetting) of the recorded value. If the value recorded by the computer is not initialized, the wrench indicator light may not turn off or it may turn on earlier than normal.

NOTE
The initialization (engine oil data resetting) of the recorded value can be performed using the following procedure:

1. *Switch the ignition OFF.*
2. *Switch the ignition ON with the selector pressed, and press and hold the selector for about 5 seconds until the master warning light ⚠/⚠ flashes.*

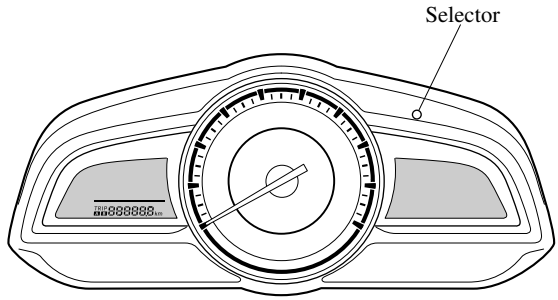

3. *After the master warning light ⚠/⚠ flashes for several seconds, the initialization is completed.*

▼ Inspecting Engine Oil Level

1. Be sure the vehicle is on a level surface.
2. Warm up the engine to normal operating temperature.
3. Turn it off and wait at least 5 minutes for the oil to return to the oil pan.
4. Pull out the dipstick, wipe it clean, and reinsert it fully.

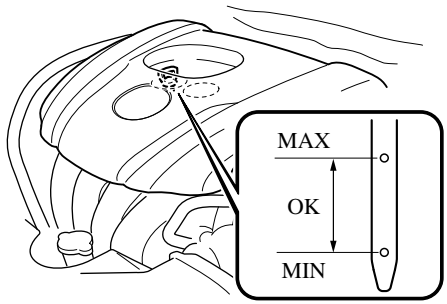

5. Pull it out again and examine the level. The level is normal if it is between the MIN and MAX marks.
   If it is near or below MIN, add enough oil to bring the level to MAX.

   ⚠ CAUTION

   Do not overfill the engine oil. This may cause engine damage.
6. Make sure the O-ring on the dipstick is positioned properly before reinserting the dipstick.
7. Reinsert the dipstick fully.

Engine Coolant

▼ Inspecting Coolant Level

⚠ WARNING

Do not use a match or live flame in the engine compartment. DO NOT ADD COOLANT WHEN THE ENGINE IS HOT:
A hot engine is dangerous. If the engine has been running, parts of the engine compartment can become very hot. You could be burned. Carefully inspect the engine coolant in the coolant reservoir, but do not open it.

Pull over to a safe location, then switch the ignition off and make sure the fan is not running before attempting to work near the cooling fan:
Working near the cooling fan when it is running is dangerous. The fan could continue running indefinitely even if the engine has stopped and the engine compartment temperature is high. You could be hit by the fan and seriously injured.

Do not remove either cooling system cap when the engine and radiator are hot:
When the engine and radiator are hot, scalding coolant and steam may shoot out under pressure and cause serious injury.

NOTE
Changing the coolant should be done by an Authorized Mazda Dealer.

Inspect the antifreeze protection and coolant level in the coolant reservoir at least once a year—at the beginning of the winter season—and before traveling where temperatures may drop below freezing.

Inspect the condition and connections of all cooling system and heater hoses. Replace any that are swollen or deteriorated.

The coolant should be at full in the radiator and between the F and L marks on the coolant reservoir when the engine is cool.

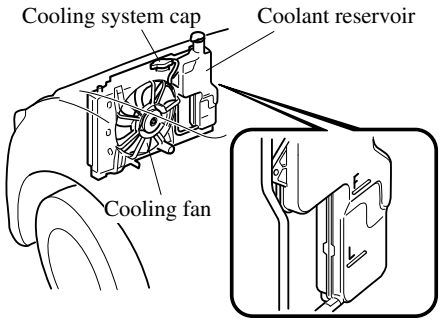

If it is at or near L, add enough coolant to the coolant reservoir to provide freezing and corrosion protection and to bring the level to F.
Securely tighten the coolant reservoir tank cap after adding coolant.

CAUTION

- *Radiator coolant will damage paint. Rinse it off quickly if spilled.*
- *If the "FL22" mark is shown on or near the cooling system cap, use of FL-22 is recommended when replacing engine coolant. Using engine coolant other than FL-22 may cause serious damage to the engine and cooling system.*

If the coolant reservoir is empty or new coolant is required frequently, consult an Authorized Mazda Dealer.

Brake/Clutch Fluid

▼ Inspecting Brake/Clutch Fluid Level

WARNING

If the brake/clutch fluid level is low, have the brakes inspected:
A low brake/clutch fluid level is dangerous. A low level could indicate brake lining wear or a brake system leak which could cause the brakes to fail and lead to an accident.

The brakes and clutch draw fluid from the same reservoir.
Inspect the fluid level in the reservoir regularly. It should be kept between the MAX and MIN lines.
The level normally drops with accumulated distance, a condition associated with wear of brake and clutch linings. If it is excessively low, have the brake/clutch system inspected by an Authorized Mazda Dealer.

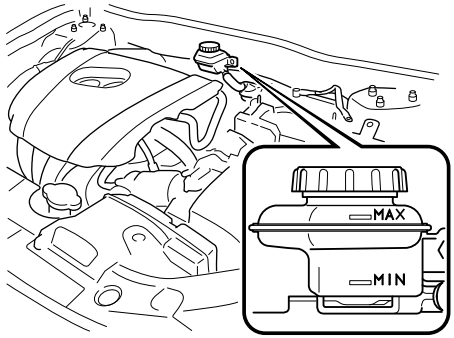

Window Washer Fluid

▼ Inspecting Washer Fluid Level

WARNING

Use only windshield washer fluid or plain water in the reservoir:
Using radiator antifreeze as washer fluid is dangerous. If sprayed on the windshield, it will dirty the windshield, affect your visibility, and could result in an accident.

Using Washer Fluid Without Anti-freeze Protection in Cold Weather:
Operating your vehicle in temperatures below 4 degrees C (40 degrees F) using washer fluid without anti-freeze protection is dangerous as it could cause impaired windshield vision and result in an accident. In cold weather, always use washer fluid with anti-freeze protection.

NOTE
State or local regulations may restrict the use of volatile organic compounds (VOCs), which are commonly used as anti-freeze agents in washer fluid. A washer fluid with limited VOC content should be used only if it provides adequate freeze resistance for all regions and climates in which the vehicle will be operated.

Inspect fluid level in the washer fluid reservoir; add fluid if necessary.

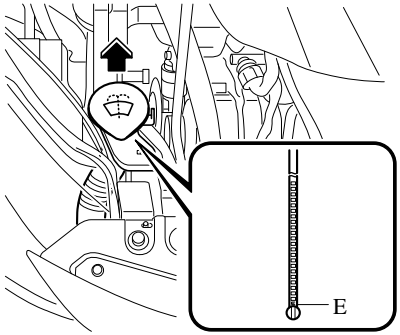

Use plain water if washer fluid is unavailable.
But use only washer fluid in cold weather to prevent it from freezing.

NOTE
Front and rear washer fluid is supplied from the same reservoir.

Body Lubrication

All moving points of the body, such as door and hood hinges and locks, should be lubricated each time the engine oil is changed. Use a nonfreezing lubricant on locks during cold weather.

Make sure the hood's secondary latch keeps the hood from opening when the primary latch is released.

Wiper Blades

CAUTION

- *Hot waxes applied by automatic car washers have been known to affect the wiper's ability to clean windows.*
- *To prevent damage to the wiper blades, do not use gasoline, kerosene, paint thinner, or other solvents on or near them.*
- *When the wiper lever is in the AUTO position and the ignition is switched ON, the wipers may move automatically in the following cases:*
  - *If the windshield above the rain sensor is touched.*
  - *If the windshield above the rain sensor is wiped with a cloth.*
  - *If the windshield is struck with a hand or other object.*
  - *If the rain sensor is struck with a hand or other object from inside the vehicle.*

  Be careful not to pinch hands or fingers as it may cause injury, or damage the wipers. When washing or servicing the vehicle, make sure the wiper lever is in the OFF position.

Contamination of either the windshield or the blades with foreign matter can reduce wiper effectiveness. Common sources are insects, tree sap, and hot wax treatments used by some commercial car washes.

If the blades are not wiping properly, clean the window and blades with a good cleaner or mild detergent; then rinse thoroughly with clean water. Repeat if necessary.

▼ Replacing Windshield Wiper Blades

When the wipers no longer clean well, the blades are probably worn or cracked. Replace them.

CAUTION

To prevent damage to the wiper arms and other components, do not try to sweep the wiper arm by hand.

NOTE
When raising both windshield wiper arms, raise the driver's side wiper arm first. When lowering the wiper arms, slowly lower the wiper arm from the passenger's side first while supporting it with your hand. Forcefully lowering the wiper arms could damage the wiper arm and blade, and may scratch or crack the windshield.

1. Raise the wiper arm.
2. Open the clip and slide the blade assembly in the direction of the arrow.

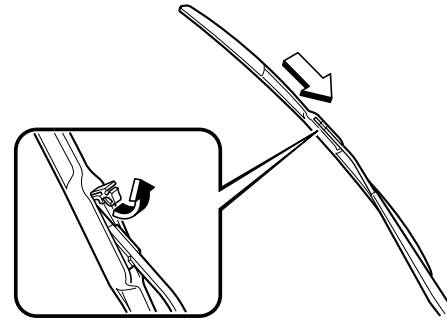

3. Tilt the blade assembly and remove it from the arm.

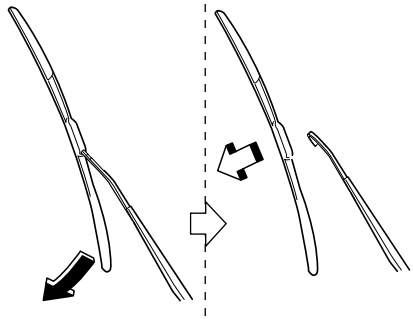

CAUTION

To prevent damage to the windshield let the wiper arm down easily, do not let it slap down on the windshield.

4. Pull down the blade rubber and slide it out of blade holder.

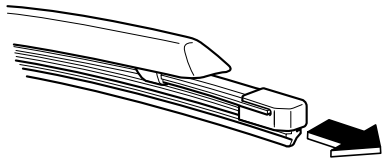

5. Remove the metal stiffeners from each blade rubber and install them in the new blade.

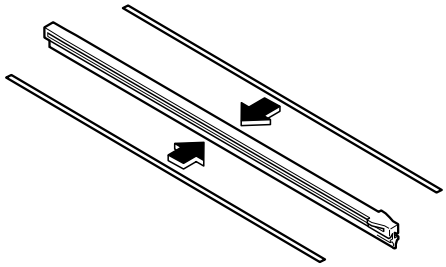

CAUTION

- *Do not bend or discard the stiffeners. You need to use them again.*
- *If the metal stiffeners are switched, the blade's wiping efficiency could be reduced.*
  So do not use the driver's side metal stiffeners on the passenger's side, or vice versa.
- *Be sure to reinstall the metal stiffeners in the new blade rubber so that the curve is the same as it was in the old blade rubber.*

6. Carefully insert the new blade rubber. Then install the blade assembly in the reverse order of removal.

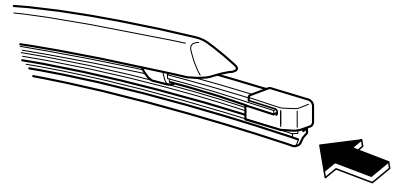

▼ Replacing Rear Window Wiper Blade

When the wiper no longer cleans well, the blade is probably worn or cracked. Replace it.

CAUTION

To prevent damage to the wiper arm and other components, do not move the wiper by hand.

1. Remove the cover.

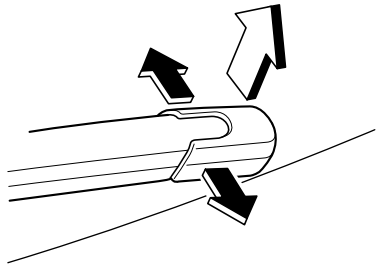

2. Remove the stopper and raise the wiper arm.

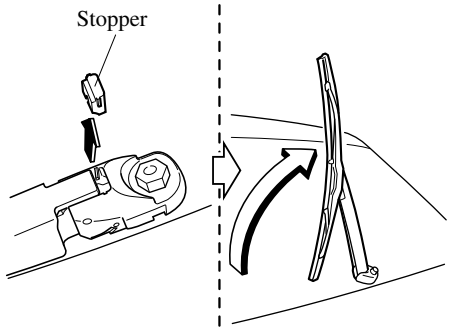

3. Firmly rotate the wiper blade to the right until it unlocks, then remove the blade.

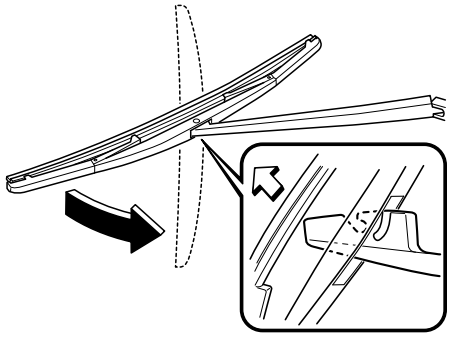

CAUTION

To prevent damage to the rear window, do not let the wiper arm fall on it.

4. Pull down the blade rubber and slide it out of the blade holder.

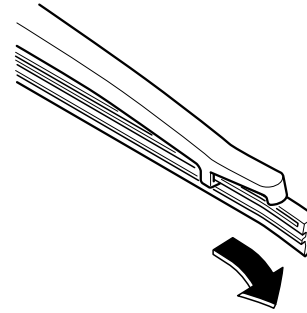

5. Remove the metal stiffeners from the blade rubber and install them in the new blade.

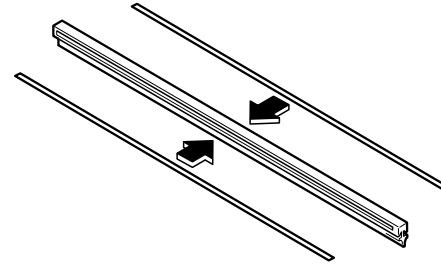

CAUTION

Do not bend or discard the stiffeners. You need to use them again.

6. Carefully insert the new blade rubber. Then install the blade assembly in the reverse order of removal.

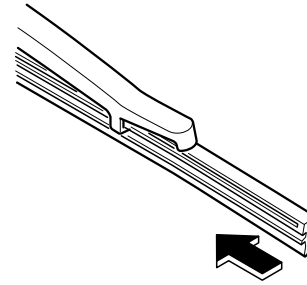

Battery

WARNING

Wash hands after handling the battery and related accessories:
Battery posts, terminals and related accessories contain lead and lead compounds, chemicals known to the State of California to cause cancer and reproductive harm.

Read the following precautions carefully before using the battery or inspecting to ensure safe and correct handling:

Always wear eye protection when working near the battery:
Working without eye protection is dangerous. Battery fluid contains SULFURIC ACID which could cause blindness if splashed into your eyes. Also, hydrogen gas produced during normal battery operation, could ignite and cause the battery to explode.

Wear eye protection and protective gloves to prevent contact with battery fluid:
Spilled battery fluid is dangerous.
Battery fluid contains SULFURIC ACID which could cause serious injuries if it gets in eyes, or on the skin or clothing. If this happens, immediately flush your eyes with water for 15 minutes or wash your skin thoroughly and get medical attention.

Always keep batteries out of the reach of children:
Allowing children to play near batteries is dangerous. Battery fluid could cause serious injuries if it gets in the eyes or on the skin.

Keep flames and sparks away from open battery cells and do not allow metal tools to contact the positive (+) or negative (−) terminal of the battery when working near a battery. Do not allow the positive (+) terminal to contact the vehicle body:
Flames and sparks near open battery cells are dangerous. Hydrogen gas, produced during normal battery operation, could ignite and cause the battery to explode. An exploding battery can cause serious burns and injuries. Keep all flames including cigarettes and sparks away from open battery cells.

Keep all flames and sparks away from open battery cells because hydrogen gas is produced from open battery cells while charging the battery or adding battery fluid:
Flames and sparks near open battery cells are dangerous. Hydrogen gas, produced during normal battery operation, could ignite and cause the battery to explode. An exploding battery can cause serious burns and injuries. Keep all flames including cigarettes and sparks away from open battery cells.

NOTE
Before performing battery maintenance, remove the battery cover.

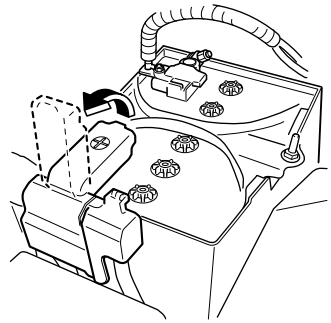

▼ Battery Maintenance

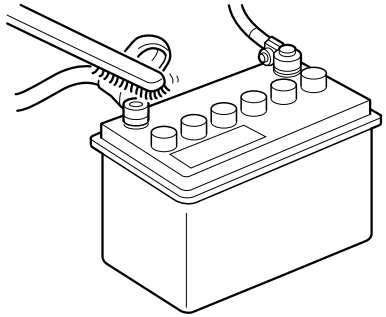

To get the best service from a battery:

- Keep it securely mounted.
- Keep the top clean and dry.
- Keep terminals and connections clean, tight, and coated with petroleum jelly or terminal grease.
- Rinse off spilled electrolyte immediately with a solution of water and baking soda.
- If the vehicle will not be used for an extended time, disconnect the battery cables and charge the battery every six weeks.

▼ Battery Replacement

Contact an Authorized Mazda Dealer for a battery replacement purchase.

Key Battery Replacement

If the buttons on the transmitter are inoperable and the operation indicator light does not flash, the battery may be dead.
Replace with a new battery before the transmitter becomes unusable.

⚠ CAUTION

- *Make sure the battery is installed correctly. Battery leakage could occur if it is not installed correctly.*
- *When replacing the battery, be careful not to touch any of the internal circuitry and electrical terminals, bend the electrical terminals, or get dirt in the transmitter as the transmitter could be damaged.*
- *There is the danger of explosion if the battery is not correctly replaced.*
- *Dispose of used batteries according to the following instructions.*
  - *Insulate the plus and minus terminals of the battery using cellophane or equivalent tape.*
  - *Never disassemble.*
  - *Never throw the battery into fire or water.*
  - *Never deform or crush.*
- *Replace only with the same type battery (CR2025 or equivalent).*

The following conditions indicate that the battery power is low:

- The KEY indicator light (green) flashes in the instrument cluster for about 30 seconds after the engine is switched OFF.

- The system does not operate and the operation indicator light on the transmitter does not flash when the buttons are pressed.
- The system's operational range is reduced.

Replacing the battery at an Authorized Mazda Dealer is recommended to prevent damage to the key. If replacing the battery by yourself, follow the instruction.

Replacing the key battery

1. Press the knob and pull out the auxiliary key.

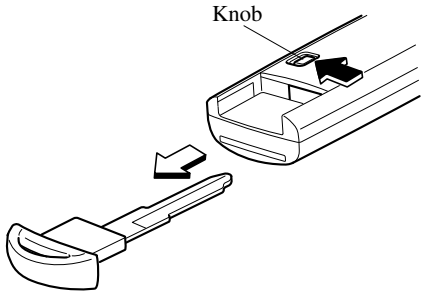

2. Twist a tape-wrapped flathead screwdriver in the direction of the arrow and open the cover slightly.

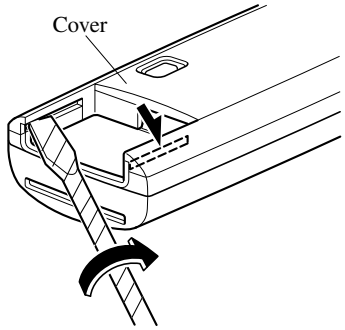

3. Insert the tape-wrapped flathead screwdriver into the gap and slide it in the direction of the arrow.

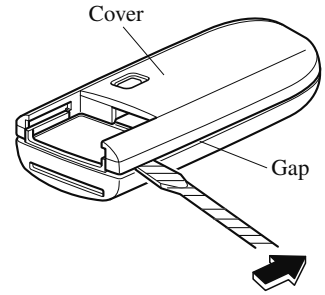

4. Twist the flathead screwdriver in the direction of the arrow and remove the cover.

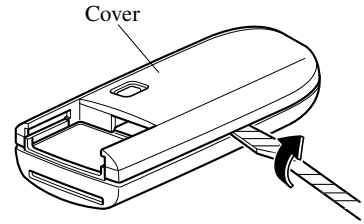

5. Remove the battery cap, then remove the battery.

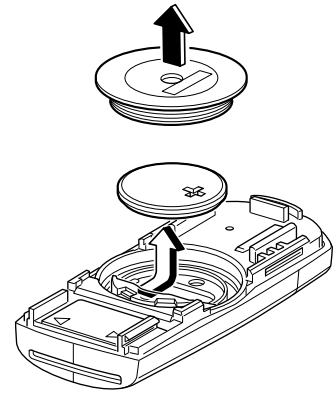

CAUTION

- *Be careful not to allow the rubber ring shown in the figure to be scratched or damaged.*
- *If the rubber ring detaches, reattach it before inserting a new battery.*

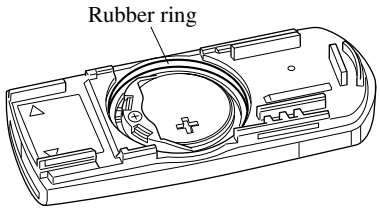

6. Insert a new battery with the positive pole facing up, and then cover the battery with the battery cap.

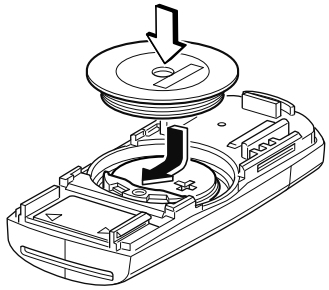

7. Close the cover.

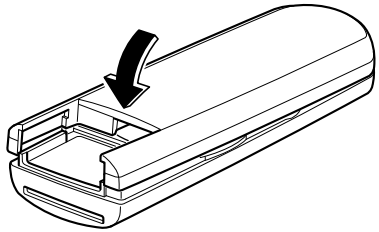

8. Reinsert the auxiliary key.

Tires

For reasons of proper performance, safety, and better fuel economy, always maintain recommended tire inflation pressures and stay within the recommended load limits and weight distribution.

WARNING

Using Different Tire Types:
Driving your vehicle with different types of tires is dangerous. It could cause poor handling and poor braking; leading to loss of control.
Except for the limited use of the temporary spare tire, use only the same type tires (radial, bias-belted, bias-type) on all four wheels.

Using Wrong-Sized Tires:
Using any other tire size than what is specified for the vehicle (page 9-7) is dangerous. It could seriously affect ride, handling, ground clearance, tire clearance, and speedometer calibration. This could cause you to have an accident. Use only tires that are the correct size specified for the vehicle.

▼ Tire Inflation Pressure

WARNING

Always inflate the tires to the correct pressure:
Overinflation or underinflation of tires is dangerous. Adverse handling or unexpected tire failure could result in a serious accident.
Refer to Tires on page 9-7.

Use only a Mazda-genuine tire valve cap:
Use of a non-genuine part is dangerous as the correct tire air pressure cannot be maintained if the tire valve becomes damaged. If the vehicle is driven under this condition, the tire air pressure will decrease which could result in a serious accident. Do not use any part for the tire valve cap that is not a Mazda-genuine part.

Inspect all tire pressures monthly (including the spare) when the tires are cold. Maintain recommended pressures for the best ride, handling, and minimum tire wear.
Refer to the specification charts (page 9-7).

NOTE

- *Always check tire pressure when tires are cold.*
- *Warm tires normally exceed recommended pressures. Do not release air from warm tires to adjust the pressure.*
- *Underinflation can cause reduced fuel economy, uneven and accelerated tire wear, and poor sealing of the tire bead, which will deform the wheel and cause separation of tire from rim.*
- *Overinflation can produce a harsh ride, uneven and accelerated tire wear, and a greater possibility of damage from road hazards.*
  Keep your tire pressure at the correct levels. If one frequently needs inflating, have it inspected.

▼ Tire Rotation

WARNING

Rotate tires periodically:
Irregular tire wear is dangerous. To equalize tread wear for maintaining good performance in handling and braking, rotate the tires every 12,000 km (7,500 miles). However Mazda recommends to rotate every 8,000 km (5,000 miles) to help increase tire life and distribute wear more evenly.
Refer to Scheduled Maintenance on page 6-4.

During rotation, inspect them for correct balance.

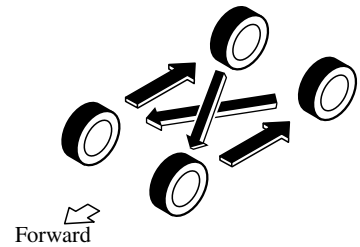

Do not include (TEMPORARY USE ONLY) spare tire in rotation.

Also, inspect them for uneven wear and damage. Abnormal wear is usually caused by one or a combination of the following:

- Incorrect tire pressure
- Improper wheel alignment
- Out-of-balance wheel
- Severe braking

After rotation, inflate all tire pressures to specification (page 9-7) and inspect the lug nuts for tightness.

CAUTION

Rotate unidirectional tires and radial tires that have an asymmetrical tread pattern or studs only from front to rear, not from side to side. Tire performance will be reduced if rotated from side to side.

▼ Replacing a Tire

WARNING

Always use tires that are in good condition:
Driving with worn tires is dangerous. Reduced braking, steering, and traction could result in an accident.

Replace all four tires at the same time:
Replacing just one tire is dangerous. It could cause poor handling and poor braking resulting in loss of vehicle control. Mazda strongly recommends that you replace all four tires at the same time.

If a tire wears evenly, a wear indicator will appear as a solid band across the tread. Replace the tire when this happens.

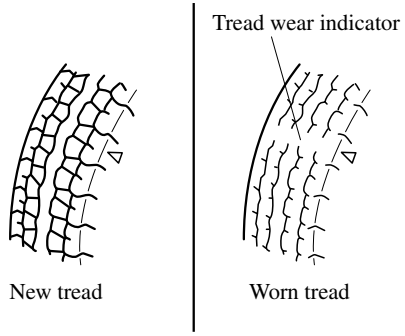

You should replace the tire before the band crosses the entire tread.

NOTE
Tires degrade over time, even when they are not being used on the road. It is recommended that tires generally be replaced when they are 6 years or older. Heat caused by hot climates or frequent high loading conditions can accelerate the aging process. You should replace the spare tire when you replace the other road tires due to the aging of the spare tire. The period in which the tire was manufactured (both week and year) is indicated by a 4-digit number.
Refer to Tire Labeling on page 8-25.

▼ Temporary Spare Tire

Inspect the temporary spare tire at least monthly to make sure it is properly inflated and stored.

NOTE
The temporary spare tire condition gradually deteriorates even if it has not been used.

The temporary spare tire is easier to handle because of its construction which is lighter and smaller than a conventional tire. This tire should be used only for an emergency and only for a short distance.

Use the temporary spare tire only until the conventional tire is repaired, which should be as soon as possible.
Refer to Tires on page 9-7.

⚠ CAUTION

- *Do not use your temporary spare tire rim with a snow tire or a conventional tire. Neither will properly fit and could damage both tire and rim.*
- *The temporary spare tire has a tread life of less than 5,000 km (3,000 miles). The tread life may be shorter depending on driving conditions.*
- *The temporary spare tire is for limited use, however, if the tread wear solid-band indicator appears, replace the tire with the same type of temporary spare (page 6-38).*

NOTE
Tires degrade over time, even when they are not being used on the road. It is recommended that tires generally be replaced when they are 6 years or older. Heat caused by hot climates or frequent high loading conditions can accelerate the aging process. You should replace the spare tire when you replace the other road tires due to the aging of the spare tire. The period in which the tire was manufactured (both week and year) is indicated by a 4-digit number.
Refer to Tire Labeling on page 8-25.

▼ Replacing a Wheel

WARNING

Always use wheels of the correct size on your vehicle:
Using a wrong-sized wheel is dangerous. Braking and handling could be affected, leading to loss of control and an accident.

CAUTION

A wrong-sized wheel may adversely affect:

- *Tire fit*
- *Wheel and bearing life*
- *Ground clearance*
- *Snow-chain clearance*
- *Speedometer calibration*
- *Headlight aim*
- *Bumper height*
- *Tire Pressure Monitoring System**

NOTE

- *When replacing a wheel, make sure the new one is the same as the original factory wheel in diameter, rim width, and offset (inset/outset).*
- *For details, contact an Authorized Mazda Dealer.*

Proper tire balancing provides the best riding comfort and helps reduce tread wear. Out-of-balance tires can cause vibration and uneven wear, such as cupping and flat spots.

 *Some models.

Light Bulbs

With LED Headlights

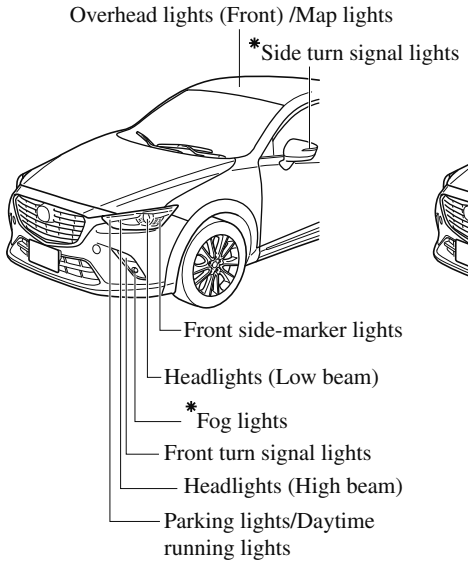

With Halogen Headlights

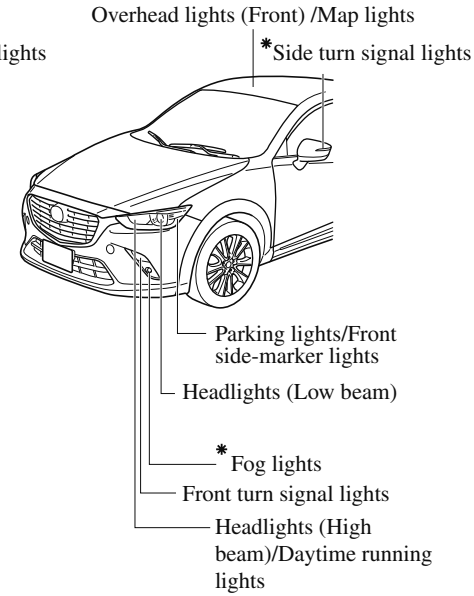

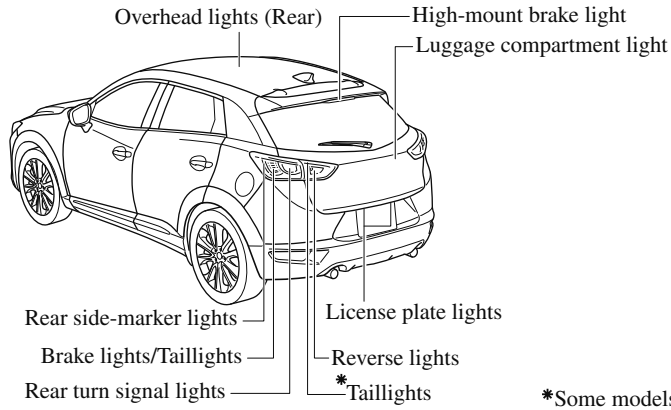

*Some models.

WARNING

Never touch the glass portion of a halogen bulb with your bare hands and always wear eye protection when handling or working around the bulbs:
When a halogen bulb breaks, it is dangerous. These bulbs contain pressurized gas. If one is broken, it will explode and serious injuries could be caused by the flying glass.
If the glass portion is touched with bare hands, body oil could cause the bulb to overheat and explode when lit.

Always keep halogen bulbs out of the reach of children:
Playing with a halogen bulb is dangerous. Serious injuries could be caused by dropping a halogen bulb or breaking it some other way.

CAUTION

When removing the lens or lamp unit using a flathead screwdriver, make sure that the flathead screwdriver does not contact the interior terminal. If the flathead screwdriver contacts the terminal, a short circuit may occur.

NOTE

- *To replace the bulb, contact an Authorized Mazda Dealer.*
- *If the halogen bulb is accidentally touched, it should be cleaned with rubbing alcohol before being used.*
- *Use the protective cover and carton for the replacement bulb to dispose of the old bulb promptly and out of the reach of children.*

▼ Replacing Exterior Light Bulbs

Headlights (With LED headlights)

The LED bulb cannot be replaced as a single unit because it is an integrated unit. The LED bulb has to be replaced with the unit. We recommend an Authorized Mazda Dealer when the replacement is necessary.

Headlights/Daytime running lights (With halogen headlights)

High-beams bulbs/Daytime running lights

1. Make sure the ignition is switched off, and the headlight switch is off.
2. Lift the hood.
3. Disconnect the connector from the unit by pressing the tab on the connector with your finger and pulling the connector downward.

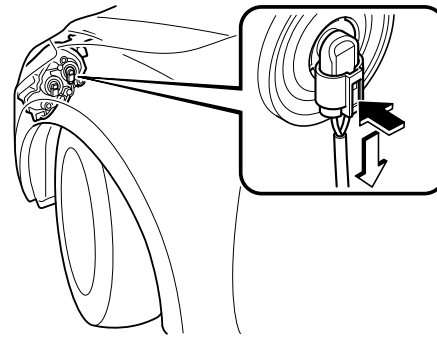

4. Turn the socket and bulb assembly to remove it. Carefully remove the bulb from its socket in the reflector by gently pulling it straight backward out of the socket.

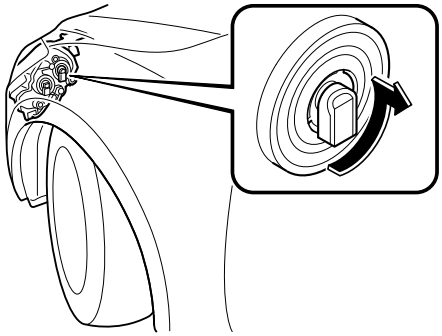

5. Install the new bulb in the reverse order of the removal procedure.

Low-beam bulbs

1. Make sure the ignition is switched off, and the headlight switch is off.
2. Lift the hood.
3. Disconnect the connector from the unit by pressing the tab on the connector with your finger and pulling the connector downward.

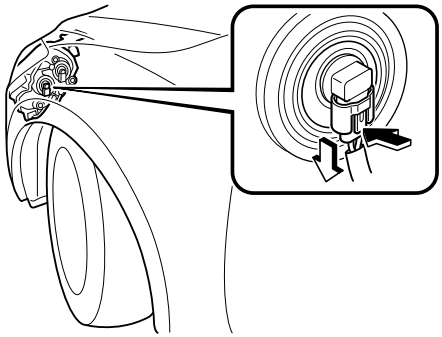

4. Turn the socket and bulb assembly to remove it. Carefully remove the bulb from its socket in the reflector by gently pulling it straight backward out of the socket.

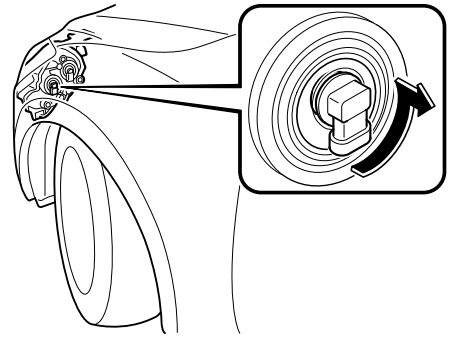

5. Install the new bulb in the reverse order of the removal procedure.

Parking lights/Daytime running lights/ Front side-marker lights (With LED headlights)

The LED bulb cannot be replaced as a single unit because it is an integrated unit. The LED bulb has to be replaced with the unit. We recommend an Authorized Mazda Dealer when the replacement is necessary.

Parking lights/Front side-marker lights (With halogen headlights)

1. Make sure the ignition is switched off, and the headlight switch is off.
2. Turn the socket and bulb assembly counterclockwise and remove it.
3. Disconnect the bulb from the socket.

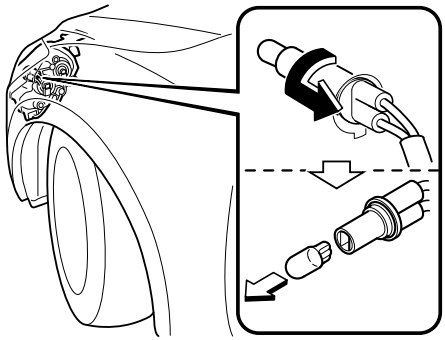

4. Install the new bulb in the reverse order of the removal procedure.

Front turn signal lights

1. Make sure the ignition is switched off, and the headlight switch is off.
2. Turn the screw counterclockwise and remove it, and then partially peel back the mudguard.

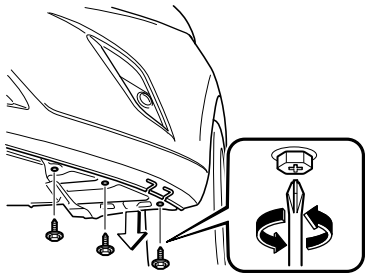

3. Turn the socket and bulb assembly counterclockwise and remove it.
4. Disconnect the bulb from the socket.

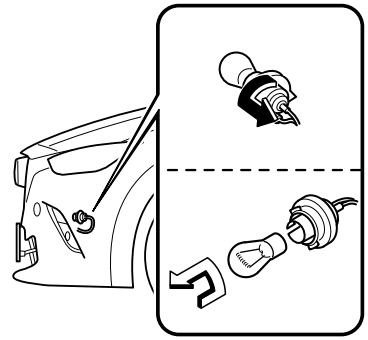

5. Install the new bulb in the reverse order of the removal procedure.

Fog lights*, Side turn signal lights*, Brake lights/Taillights (LED type), Rear side-marker lights (LED type),Taillights (LED type)*, High-mount brake light, Reverse lights (LED type)

The LED bulb cannot be replaced as a single unit because it is an integrated unit. The LED bulb has to be replaced with the unit. We recommend an Authorized Mazda Dealer when the replacement is necessary.

*Some models.

Rear turn signal lights, Brake lights/ Taillights (Bulb type), Rear side-marker lights (Bulb type)

1. Make sure the ignition is switched off, and the headlight switch is off.
2. Turn the bolts counterclockwise and remove them.

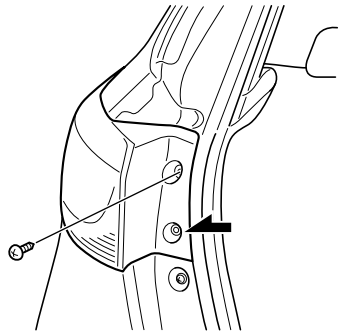

3. Pull the unit rearward to remove it.

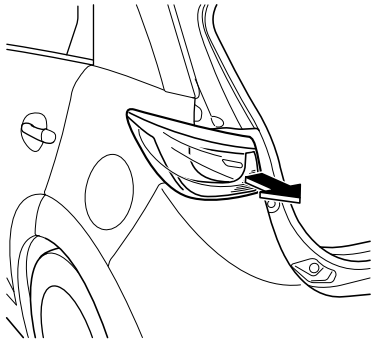

4. Turn the socket and bulb assembly counterclockwise and remove it.
5. Disconnect the bulb from the socket.

Rear turn signal lights

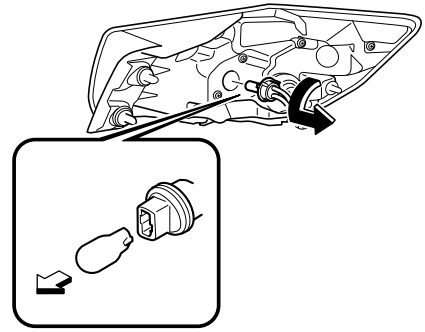

Brake lights/Taillights

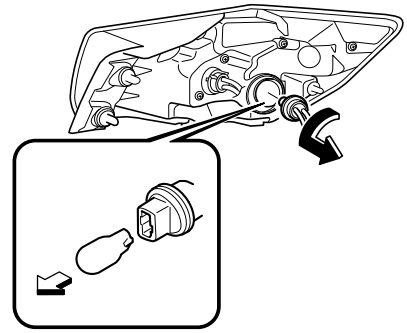

Rear side-marker lights

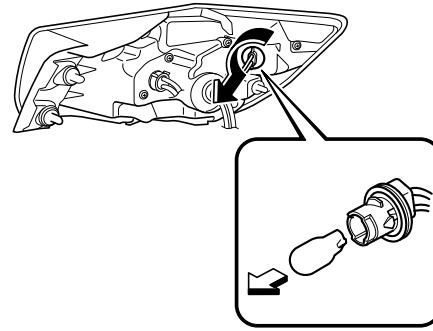

6. Install the new bulb in the reverse order of the removal procedure.

Reverse lights (Bulb type)

1. Make sure the ignition is switched off, and the headlight switch is off.
2. Remove the cover.

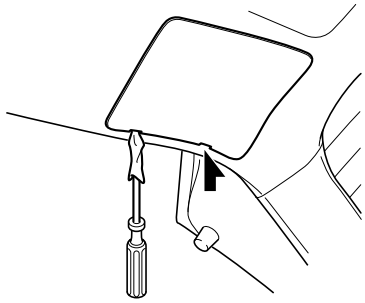

3. Turn the socket and bulb assembly counterclockwise and remove it.
4. Disconnect the bulb from the socket.

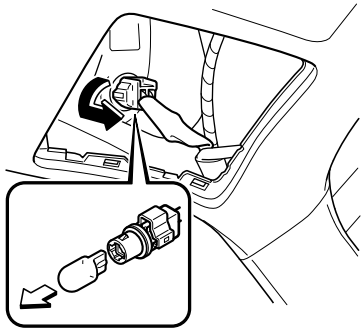

5. Install the new bulb in the reverse order of the removal procedure.

License plate lights

1. Make sure the ignition is switched off, and the headlight switch is off.
2. Remove the cover.

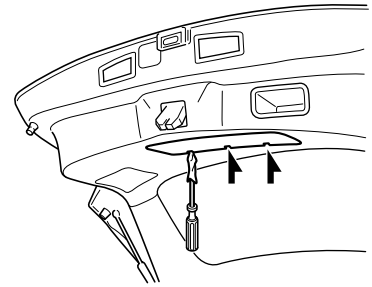

3. Turn the socket and bulb assembly counterclockwise and remove it.

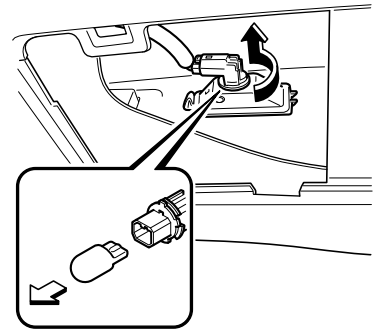

4. Disconnect the bulb from the socket.
5. Install the new bulb in the reverse order of the removal procedure.

▼ Replacing Interior Light Bulbs

Overhead lights (Front)/Map lights, Overhead lights (Rear)

1. Wrap a small flathead screwdriver with a soft cloth to prevent damage to the lens, and then remove the lens by carefully prying on the edge of the lens with the flathead screwdriver.
2. Disconnect the bulb by pulling it out.

Overhead lights (Front)/Map lights

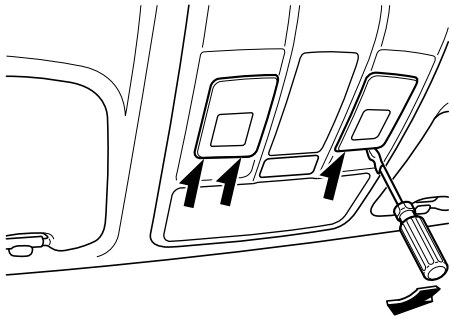

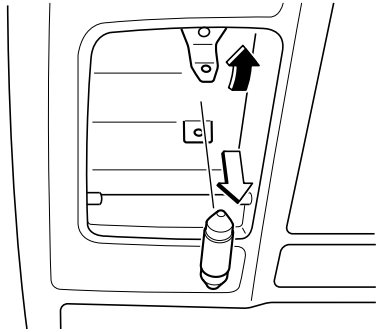

Overhead lights (Rear)

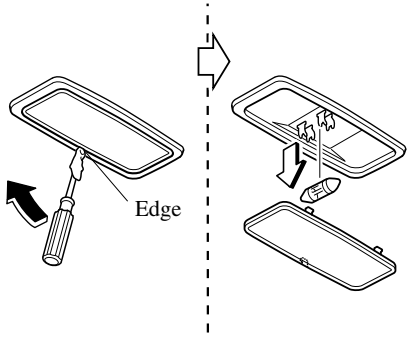

3. Install the new bulb in the reverse order of the removal procedure.

Luggage compartment light

1. Wrap a small flathead screwdriver with a soft cloth to prevent damage to the lens and remove the lens unit by carefully prying on the edge of the lens unit with the flathead screwdriver.
2. Disconnect the bulb by pulling it out.

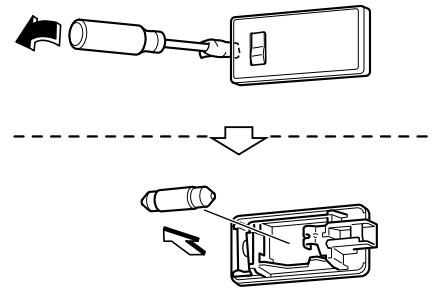

3. Install the new bulb in the reverse order of the removal procedure.

Fuses

Your vehicle's electrical system is protected by fuses.

If any lights, accessories, or controls do not work, inspect the appropriate circuit protector. If a fuse has blown, the inside element will be melted.

If the same fuse blows again, avoid using that system and consult an Authorized Mazda Dealer as soon as possible.

▼ Fuse Replacement

Replacing the fuses on the vehicle's left side

If the electrical system does not work, first inspect the fuses on the vehicle's left side.

1. Make sure the ignition is switched off, and other switches are off.
2. Open the fuse panel cover.

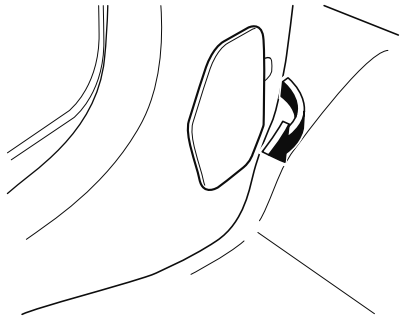

3. Pull the fuse straight out with the fuse puller provided on the fuse block located in the engine compartment.

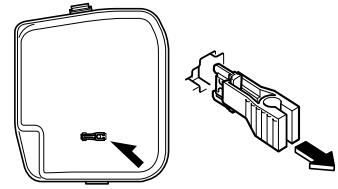

4. Inspect the fuse and replace it if it is blown.

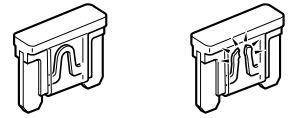

Normal Blown

5. Insert a new fuse of the same amperage rating, and make sure it fits tightly. If it does not fit tightly, have an expert install it. We recommend an Authorized Mazda Dealer.
   If you have no spare fuses, borrow one of the same rating from a circuit not essential to vehicle operation, such as the AUDIO or OUTLET circuit.

   ⚠ CAUTION

   Always replace a fuse with a genuine Mazda fuse or equivalent of the same rating. Otherwise you may damage the electric system.
6. Reinstall the cover and make sure that it is securely installed.

Replacing the fuses under the hood

If the headlights or other electrical components do not work and the fuses in the cabin are normal, inspect the fuse block under the hood. If a fuse is blown, it must be replaced. Follow these steps:

1. Make sure the ignition is switched off, and other switches are off.
2. Remove the fuse block cover.

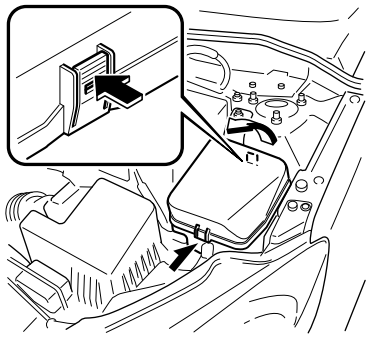

3. If any fuse but the MAIN fuse is blown, replace it with a new one **of the same amperage rating**.

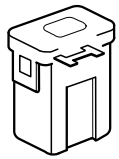

Normal

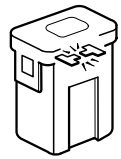

Blown

WARNING

Do not replace the main fuse by yourself. Have an Authorized Mazda Dealer perform the replacement:
Replacing the fuse by yourself is dangerous because the MAIN fuse is a high current fuse. Incorrect replacement could cause an electrical shock or a short circuit resulting in a fire.

4. Reinstall the cover and make sure that it is securely installed.

▼ Fuse Panel Description

Fuse block (Engine compartment)

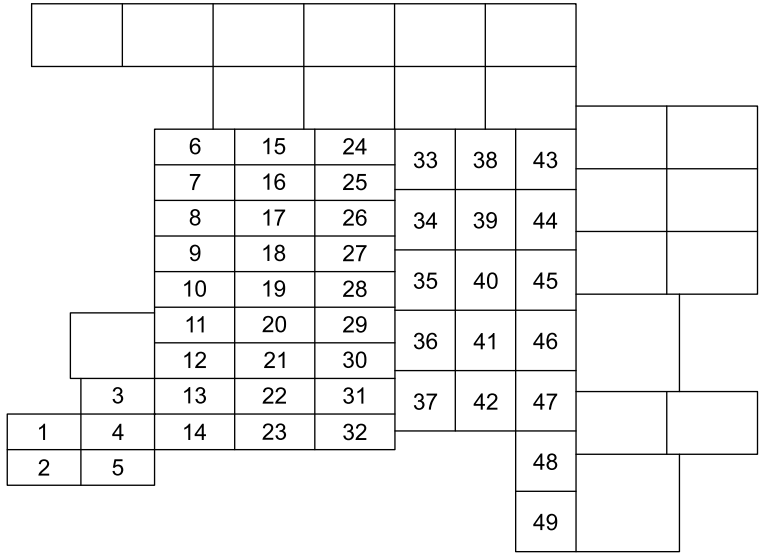

DESCRIPTION		FUSE RATING	PROTECTED COMPONENT
1	C/U IG1	15 A	For protection of various circuits
2	ENGINE IG1	7.5 A	Engine control system
3	SUNROOF	10 A	Moonroof*
4	INTERIOR	15 A	Overhead light, Audio system
5	ENG+B	7.5 A	Engine control system
6	AUDIO2 ENGINE4	15 A	Engine control system
7	METER1	10 A	Instrument cluster
8	SRS1	7.5 A	Air bag
9	METER2	7.5 A	—
10	RADIO	7.5 A	Audio system
11	ENGINE3	15 A	Engine control system
12	ENGINE1	15 A	—
13	ENGINE2	15 A	Engine control system
14	AUDIO1	25 A	Audio system

*Some models.

DESCRIPTION		FUSE RATING	PROTECTED COMPONENT
15	A/C MAG	7.5 A	Air conditioner
16	AT PUMP	15 A	—
17	AT	15 A	Transaxle control system
18	D.LOCK	25 A	Power door locks
19	H/L RH	20 A	Headlight (RH)
20	ENG+B2	7.5 A	Engine control system
21	TAIL	20 A	Taillights, License plate lights, Parking lights
22	ST.HEATER	15 A / 20 A	Heated steering wheel*, Headlight*
23	ROOM	25 A	Overhead light
24	FOG	15 A	Fog lights*
25	H/CLEAN	20 A	—
26	STOP	10 A	Brake lights
27	HORN	15 A	Horn
28	H/L LH	20 A	Headlight (LH)
29	ABS/DSC S	30 A	ABS, Dynamic stability control system
30	HAZARD	15 A	Hazard warning flashers, Turn signal lights
31	FUEL PUMP SCR	15 A	Fuel system
32	FUEL WARM	25 A	—
33	WIPER	20 A	Front window wiper
34	CABIN+B	50 A	For protection of various circuits
35	FAN2 EPB L	30 A	Electric parking brake (LH)
36	FUEL PUMP	30 A	—
37	ABS/DSC M	50 A	ABS, Dynamic stability control system
38	EVVT	20 A	Engine control system
39	—	—	—
40	FAN1 EPB R	30 A	Electric parking brake (RH)
41	FAN3	40 A	Cooling fan
42	ENG.MAIN	40 A	Engine control system
43	EPS	60 A	—
44	DEFOG	40 A	Rear window defogger
45	IG2	30 A	For protection of various circuits
46	INJECTOR ENG.SUB	30 A	Engine control system

*Some models.

DESCRIPTION		FUSE RATING	PROTECTED COMPONENT
47	HEATER	40 A	Air conditioner
48	P.WINDOW1	30 A	Power windows
49	DCDC DE	40 A	—

Fuse block (Left side)

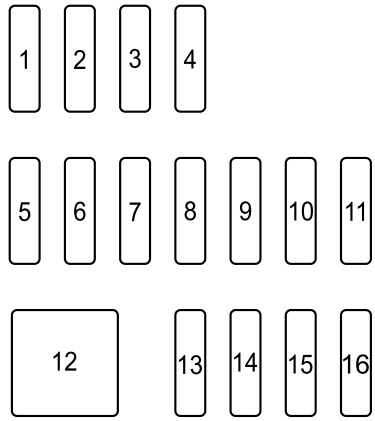

DESCRIPTION		FUSE RATING	PROTECTED COMPONENT
1	—	—	—
2	—	—	—
3	AUDIO2	15 A	Audio system
4	ST.HEATER	10 A	Heated steering system*
5	F.OUTLET	15 A	Accessory sockets
6	—	—	—
7	AT IND	7.5 A	AT shift indicator*
8	MIRROR	7.5 A	Power control mirror
9	—	—	—
10	P.WINDOW2	25 A	Power windows
11	R.WIPER	15 A	Rear window wiper and washer
12	P.SEAT D	30 A	Power seat*
13	—	—	—
14	SRS2/ESCL	15 A	—
15	SEAT WARM	20 A	Seat warmer*

 *Some models.

DESCRIPTION		FUSE RATING	PROTECTED COMPONENT
16	M.DEF	7.5 A	Mirror defogger*

*Some models.

Exterior Care

The paintwork on your Mazda represents the latest technical developments in composition and methods of application.

Environmental hazards, however, can harm the paint's protective properties, if proper care is not taken.

Here are some examples of possible damage, with tips on how to prevent them.

Etching Caused by Acid Rain or Industrial Fallout

Occurrence

Industrial pollutants and vehicle emissions drift into the air and mix with rain or dew to form acids. These acids can settle on a vehicle's finish. As the water evaporates, the acid becomes concentrated and can damage the finish.
And the longer the acid remains on the surface, the greater the chance is for damage.

Prevention

It is necessary to wash and wax your vehicle to preserve its finish according to the instructions in this section. These steps should be taken immediately after you suspect that acid rain has settled on your vehicle's finish.

Damage Caused by Bird Dropping, Insects, or Tree Sap

Occurrence

Bird droppings contain acids. If these are not removed they can eat away the clear and color base coat of the vehicle's paintwork.

When insects stick to the paint surface and decompose, corrosive compounds form. These can erode the clear and color base coat of the vehicle's paintwork if they are not removed.

Tree sap will harden and adhere permanently to the paint finish. If you scratch the sap off while it is hard, some vehicle paint could come off with it.

Prevention

It is necessary to have your Mazda washed and waxed to preserve its finish according to the instructions in this section. This should be done as soon as possible.

Bird droppings can be removed with a soft sponge and water. If you are traveling and these are not available, a moistened tissue may also take care of the problem. The cleaned area should be waxed according to the instructions in this section.
Insects and tree sap are best removed with a soft sponge and water or a commercially available chemical cleaner.

Another method is to cover the affected area with dampened newspaper for one to two hours. After removing the newspaper, rinse off the loosened debris with water.

Water Marks

Occurrence

Rain, fog, dew, and even tap water can contain harmful minerals such as salt and lime. If moisture containing these minerals settles on the vehicle and evaporates, the minerals will concentrate and harden to form white rings. The rings can damage your vehicle's finish.

Prevention

It is necessary to wash and wax your vehicle to preserve its finish according to the instructions in this section. These steps should be taken immediately after you find water marks on your vehicle's finish.

Paint Chipping

Occurrence

Paint chipping occurs when gravel thrown in the air by another vehicle's tires hits your vehicle.

How to avoid paint chipping

Keeping a safe distance between you and the vehicle ahead reduces the chances of having your paint chipped by flying gravel.

NOTE

- *The paint chipping zone varies with the speed of the vehicle. For example, when traveling at 90 km/h (56 mph), the paint chipping zone is 50 m (164 ft).*
- *In low temperatures a vehicle's finish hardens. This increases the chance of paint chipping.*
- *Chipped paint can lead to rust forming on your Mazda. Before this happens, repair the damage by using Mazda touch-up paint according to the instructions in this section. Failure to repair the affected area could lead to serious rusting and expensive repairs.*

Follow **all** label and container directions when using a chemical cleaner or polish. Read all warnings and cautions.

▼ Maintaining the Finish

Washing

⚠ CAUTION

➢ *When the wiper lever is in the* AUTO *position and the ignition is switched ON, the wipers may move automatically in the following cases:*

➢ *If the windshield above the rain sensor is touched or wiped with a cloth.*
➢ *If the windshield is struck with a hand or other object from either outside or inside the vehicle.*

Keep hands and scrapers clear of the windshield when the wiper lever is in the AUTO *position and the ignition is switched ON as fingers could be pinched or the wipers and wiper blades damaged when the wipers activate automatically. If you are going to clean the windshield, be sure the wipers are turned off completely (when it is most likely that the engine is left running) this is particularly important when clearing ice and snow.*

➢ *Do not spray water in the engine compartment. Otherwise, it could result in engine-starting problems or damage to electrical parts.*
➢ *When washing and waxing the vehicle, be careful not to apply excessive force to any single area of the vehicle roof or the antenna. Otherwise, you could dent the vehicle or damage the antenna.*

To help protect the finish from rust and deterioration, wash your Mazda thoroughly and frequently, at least once a month, with lukewarm or cold water.

If the vehicle is washed improperly, the paint surface could be scratched. Here are some examples of how scratching could occur.

Scratches occur on the paint surface when:

- The vehicle is washed without first rinsing off dirt and other foreign matter.
- The vehicle is washed with a rough, dry, or dirty cloth.
- The vehicle is washed at a car wash that uses brushes that are dirty or too stiff.
- Cleansers or wax containing abrasives are used.

NOTE

- *Mazda is not responsible for scratches caused by automatic car washes or improper washing.*
- *Scratches are more noticeable on vehicles with darker paint finishes.*

To minimize scratches on the vehicle's paint finish:

- Rinse off any dirt or other foreign matter using lukewarm or cold water before washing.
- Use plenty of lukewarm or cold water and a soft cloth when washing the vehicle. Do not use a nylon cloth.
- Rub gently when washing or drying the vehicle.
- Take your vehicle only to a car wash that keeps its brushes well maintained.
- Do not use abrasive cleansers or wax that contain abrasives.

⚠ CAUTION

➢ *Do not use steel wool, abrasive cleaners, or strong detergents containing highly alkaline or caustic agents on chrome-plated or anodized aluminum parts. This may damage the protective coating; also, cleaners and detergents may discolor or deteriorate the paint.*

Pay special attention to removing salt, dirt, mud, and other foreign material from the underside of the fenders, and make sure the drain holes in the lower edges of the doors and rocker panels are clean.

Insects, tar, tree sap, bird droppings, industrial fallout, and similar deposits can damage the finish if not removed immediately. When prompt washing with plain water is ineffective, use a mild soap made for use on vehicles.

Thoroughly rinse off all soap with lukewarm or cold water. Do not allow soap to dry on the finish.

After washing the vehicle, dry it with a clean chamois to prevent water spots from forming.

WARNING

Dry off brakes that have become wet by driving slowly, releasing the accelerator pedal and lightly applying the brakes several times until the brake performance returns to normal:
Driving with wet brakes is dangerous. Increased stopping distance or the vehicle pulling to one side when braking could result in a serious accident. Light braking will indicate whether the brakes have been affected.

When using an automatic car wash

- Retract the door mirrors.
- The automatic car wash brushes could reduce the paint lustre or hasten paint deterioration.

When using a high water pressure car wash

High water temperature and high water pressure car washers are available depending on the type of car wash machine. If the car washer nozzle is put too close to the vehicle, the force of the spray could damage or deform the molding, affect the sealability of parts, and allow water to penetrate the interior. Keep a sufficient space (30 cm (12 in) or more) between the nozzle and the vehicle. In addition, do not spend too much time spraying the same area of the vehicle, and be very careful when spraying between gaps in doors and around windows.

Waxing

Your vehicle needs to be waxed when water no longer beads on the finish. Always wash and dry the vehicle before waxing it. In addition to the vehicle body, wax the metal trim to maintain its luster.

1. Use wax which contains no abrasives. Waxes containing abrasive will remove paint and could damage bright metal parts.
2. Use a good grade of natural wax for metallic, mica, and solid colors.
3. When waxing, coat evenly with the sponge supplied or a soft cloth.
4. Wipe off the wax with a soft cloth.

NOTE
A spot remover to remove oil, tar, and similar materials will usually also take off the wax. Rewax these areas even if the rest of the vehicle does not need it.

▼ Repairing Damage to the Finish

Deep scratches or chips on the finish should be repaired promptly. Exposed metal quickly rusts and can lead to major repairs.

⚠ CAUTION

If your Mazda is damaged and needs metal parts repaired or replaced, make sure the body shop applies anti-corrosion materials to all parts, both repaired and new. This will prevent them from rusting.

▼ Bright-Metal Maintenance

- Use tar remover to remove road tar and insects. Never do this with a knife or similar tool.
- To prevent corrosion on bright-metal surfaces, apply wax or chrome preservative and rub it to a high luster.
- During cold weather or in coastal areas, cover bright-metal parts with a coating of wax or preservative heavier than usual. It would also help to coat them with noncorrosive petroleum jelly or some other protective compound.

⚠ CAUTION

Do not use steel wool, abrasive cleaners, or strong detergents containing highly alkaline or caustic agents on chrome-plated or anodized aluminum parts. This may result in damage to the protective coating and cause discoloration or paint deterioration.

▼ Underbody Maintenance

Road chemicals and salt used for ice and snow removal and solvents used for dust control may collect on the underbody. If not removed, they will speed up rusting and deterioration of such underbody parts as fuel lines, frame, floor pan, and exhaust system, even though these parts may be coated with anti-corrosive material.

Thoroughly flush the underbody and wheel housings with lukewarm or cold water at the end of each winter. Try also to do this every month.

Pay special attention to these areas because they easily hide mud and dirt. **It will do more harm than good to wet down the road grime without removing it.**

The lower edges of doors, rocker panels, and frame members have drain holes that should not be clogged. Water trapped there will cause rusting.

⚠ WARNING

Dry off brakes that have become wet by driving slowly, releasing the accelerator pedal and lightly applying the brakes several times until the brake performance returns to normal:
Driving with wet brakes is dangerous. Increased stopping distance or the vehicle pulling to one side when braking could result in a serious accident. Light braking will indicate whether the brakes have been affected.

▼ Aluminum Wheel Maintenance*

A protective coating is provided over the aluminum wheels. Special care is needed to protect this coating.

⚠ CAUTION

Do not use any detergent other than mild detergent. Before using any detergent, verify the ingredients. Otherwise, the product could discolor or stain the aluminum wheels.

NOTE

- *Do not use a wire brush or any abrasive cleaner, polishing compound, or solvent on aluminum wheels. They may damage the coating.*
- *Always use a sponge or soft cloth to clean the wheels.*
  Rinse the wheels thoroughly with lukewarm or cold water. Also, be sure to clean the wheels after driving on dusty or salted roads to help prevent corrosion.
- *Avoid washing your vehicle in an automatic car wash that uses high-speed or hard brushes.*
- ***(18-inch wheel vehicle)***
  If your aluminum wheels lose luster, apply wax which contains no polishing powder.

▼ Plastic Part Maintenance

- When cleaning the plastic lenses of the lights, do not use gasoline, kerosene, rectified spirit, paint, thinner, highly acidic detergents, or strongly alkaline detergents. Otherwise, these chemical agents can discolor or damage the surfaces resulting in a significant loss in functionality. If plastic parts become inadvertently exposed to any of these chemical agents, flush with water immediately.
- If plastic parts such as the bumpers become inadvertently exposed to chemical agents or fluids such as gasoline, oil, engine coolant, or battery fluid, it could cause discoloration, staining, or paint peeling. Wipe off any such chemical agents or fluids using a soft cloth immediately.
- High water temperature and high water pressure car washers are available depending on the type of high pressure car washer device. If the car washer nozzle is put too close to the vehicle or aimed at one area for an extended period of time, it could deform plastic parts or damage the paint.
- Do not use wax containing compounds (polish). Otherwise, it could result in paint damage.
- In addition, do not use an electrical or air tool to apply wax. Otherwise, the frictional heat generated could result in deformation of plastic parts or paint damage.

*Some models.

Interior Care

WARNING

Do not spray water into the vehicle cabin:
Spraying water into the vehicle cabin is dangerous as electrical devices such as the audio and switches could get wet resulting in a malfunction or vehicle fire.

NOTE

- *Do not wipe the interior using alcohol, chlorine bleach, or organic solvents such as thinner, benzene, and gasoline. Otherwise, it may cause discoloration or stains.*
- *Rubbing hard with a stiff brush or cloth may cause damage.*

If the vehicle interior becomes soiled by any of the following, wipe it off immediately using a soft cloth.
Leaving it uncleaned could cause discoloration, stains, cracks, or peeling of the coating, and it will make it hard to wipe off later.

- Beverage or fragrance
- Grease or oil
- Soiling

▼ Seat Belt Maintenance

1. Clean the soiled area by lightly dabbing it with a soft cloth soaked in a mild detergent (approx. 5%) diluted with water.
2. Wipe off the remaining detergent using a cloth soaked in clean water and wrung out well.
3. Before retracting seat belts which have been pulled out for cleaning, dry them off thoroughly and make sure there is no remaining moisture on them.

WARNING

If a seat belt appears frayed or has abrasions, have it replaced by an Authorized Mazda Dealer:
If a seat belts is used under such a condition, it cannot function at its full capacity which could result in serious injury or death.

Use a mild detergent to remove soiling from a seat belt:
If organic solvents are used for cleaning the seat belts or they become stained or bleached, there is the possibility of them becoming weakened and as a result, they may not function at their full capacity which could cause serious injury or death.

NOTE
Clean seat belts diligently if they get dirty. Leaving them uncleaned will make it difficult to clean them later, and it may affect the smooth retracting of the seat belt.

▼ Vinyl Upholstery Maintenance

Remove dust and dirt from the vinyl upholstery using a brush or vacuum. Remove soiling from vinyl upholstery using a leather and vinyl upholstery cleaner.

▼ Upholstery and Synthetic Leather Maintenance

Fabric

1. Clean the soiled area by lightly dabbing it with a soft cloth soaked in a mild detergent (approx. 5%) diluted with water.
2. Wipe off the remaining detergent using a cloth soaked in clean water and wrung out well.

Synthetic leather

1. Remove dust and sand using a vacuum cleaner.
2. Wipe the soiled area with a soft cloth soaked in a mild detergent (approx. 5%) diluted with water.
3. Wipe off the remaining detergent using a cloth soaked in clean water and wrung out well.

▼ Leather Upholstery Maintenance*

1. Remove dust and sand using a vacuum cleaner.
2. Wipe off the soiled area with a soft cloth and a suitable, special cleaner or a soft cloth soaked in a mild detergent (about 5%) diluted with water.
3. Wipe off the remaining detergent using a cloth soaked in clean water and wrung out well.
4. Remove moisture with a dry, soft cloth and allow the leather to further dry in a well-ventilated, shaded area. If the leather gets wet such as from rain, remove the moisture and dry it as soon as possible.

NOTE

- *Because genuine leather is a natural material, its surface is not uniform and it may have natural scars, scratches, and wrinkles.*
- *To maintain the quality for as long as possible, periodical maintenance, about twice a year, is recommended.*
- *If the leather upholstery comes into contact with any of the following, clean it immediately.*
  Leaving it uncleaned could cause premature wear, mold, or stains.
  - *Sand or dirt*
  - *Grease or oil, such as hand cream*
  - *Alcohol, such as in cosmetic or hair dressing items*
- *If the leather upholstery gets wet, promptly remove moisture with a dry cloth. Remaining moisture on the surface may cause deterioration such as hardening and shrinkage.*

*Some models.

- *Exposure to direct sunlight for long periods may cause deterioration and shrinkage. When parking the car under direct sunlight for long periods, shade the interior using sunshades.*
- *Do not leave vinyl products on the leather upholstery for long periods. They may affect the leather quality and coloring. If the cabin temperature becomes hot, the vinyl may deteriorate and adhere to the genuine leather.*

▼ Plastic Part Maintenance

⚠ CAUTION

Do not use polishing agents.
Depending on the product ingredients, they could cause discoloration, stains, cracks or peeling of the coating.

▼ Instrument Panel Top Maintenance

1. Wipe the soiled area with a soft cloth soaked in a mild detergent (approx. 5%) diluted with water.
2. Wipe off the remaining detergent using a cloth soaked in clean water and wrung out well.

▼ Active Driving Display Maintenance*

The combiner and mirror surface have a special coating. When cleaning it, do not use a hard cloth, a cloth with a rough surface, or cleaning detergent. Use a fine-textured, soft cloth.
If a chemical solvent gets on the combiner or mirror surface, wipe it off immediately. Otherwise, they could be damaged and the surface coating could be scratched.

▼ Panel Maintenance

If a panel becomes soiled, wipe it off with a soft cloth soaked in clean water and thoroughly wrung out.
If some areas require further cleaning, use the following procedure:

1. Wipe the soiled area with a soft cloth soaked in a mild detergent (approx. 5 %) diluted with water.
2. Wipe off the remaining detergent using a cloth soaked in clean water and wrung out well.

NOTE
Be particularly careful when cleaning shiny surface panels and metallic parts such as plating as they can be scratched easily.

▼ Cleaning the Window Interiors

If the windows become covered with an oily, greasy, or waxy film, clean them with glass cleaner. Follow the directions on the container.

⚠ CAUTION

- *Do not scrape or scratch the inside of the window glass. It could damage the thermal filaments.*
- *When washing the inside of the window glass, use a soft cloth dampened in lukewarm water, gently wiping the thermal filaments.*
  Use of glass cleaning products could damage the thermal filaments.

*Some models.

▼ Cleaning the Floor Mats

Rubber floor mats should be cleaned with mild soap and water only.

⚠ WARNING

Do not use rubber cleaners, such as tire cleaner or tire shine, when cleaning rubber floor mats:
Cleaning the rubber floor mats with rubber cleaning products makes the floor mats slippery.
This may cause an accident when depressing the accelerator, brake, or clutch (Manual transaxle) pedal or when getting in or out of the vehicle.

After removing the floor mats for cleaning, always reinstall them securely (page 3-44).

MEMO

7 If Trouble Arises

Helpful information on what to do if a problem arises with the vehicle.

Parking in an Emergency..... 7-2
Parking in an Emergency.....7-2

Flat Tire.....7-3
Spare Tire and Tool Storage..... 7-3
Changing a Flat Tire..... 7-8

Battery Runs Out..... 7-18
Jump-Starting..... 7-18

Emergency Starting.....7-21
Starting a Flooded Engine..... 7-21
Push-Starting..... 7-21

Overheating.....7-22
Overheating..... 7-22

Emergency Towing..... 7-24
Towing Description..... 7-24
Tiedown Hooks*..... 7-25

Warning/Indicator Lights and Warning Sounds..... 7-27
If a Warning Light Turns On or Flashes..... 7-27
Message Indicated on Display*..... 7-41
Warning Sound is Activated..... 7-43

When Liftgate Cannot be Opened.....7-48
When Liftgate Cannot be Opened.....7-48

Active Driving Display Does Not Operate.....7-49
If the Active Driving Display Does Not Operate..... 7-49

*Some models.

Parking in an Emergency

The hazard warning lights should always be used when you stop on or near a roadway in an emergency.

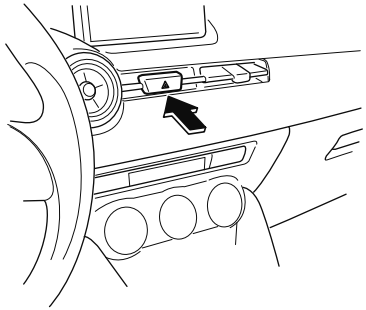

The hazard warning lights warn other drivers that your vehicle is a traffic hazard and that they must take extreme caution when near it.

Depress the hazard warning flasher and all the turn signals will flash. The hazard warning indicator lights in the instrument cluster flash simultaneously.

NOTE

- *The turn signals do not work when the hazard warning lights are on.*
- *Check local regulations about the use of hazard warning lights while the vehicle is being towed to verify that it is not in violation of the law.*

Spare Tire and Tool Storage

Spare tire and tools are stored in the locations illustrated in the diagram.

With sub-woofer

Type A

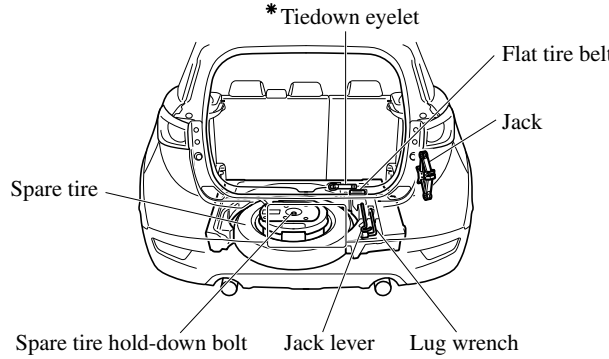

Type B

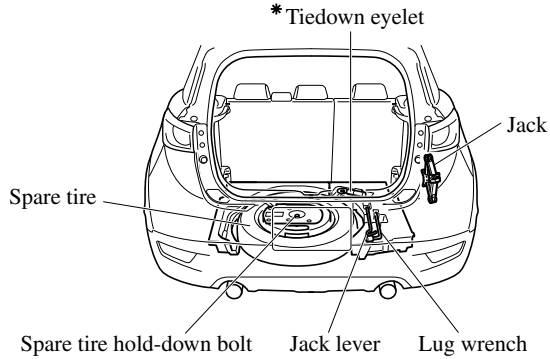

*Some models.

Without sub-woofer

Type A

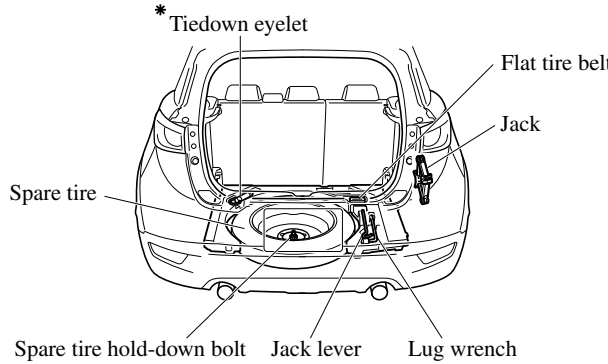

Type B

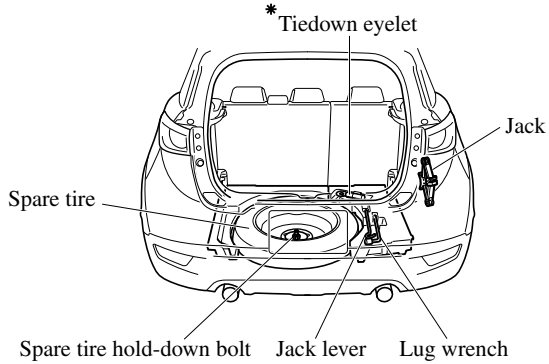

*Some models.

▼ **Jack**

To remove the jack

1. **(With luggage board)**
   Lift up the luggage board.
2. **(With luggage board)**
   Pull the luggage board outward a little and insert the opposite end into the holders so that the luggage board stands.

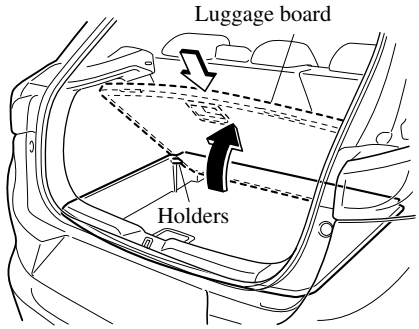

3. Lift the luggage mat.

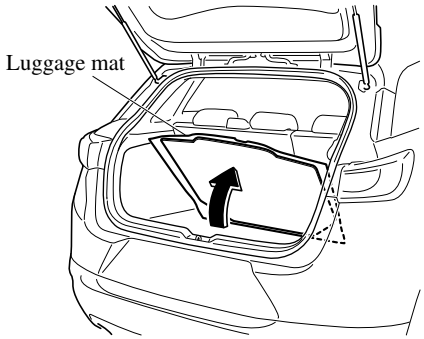

4. Remove the cargo sub compartment.

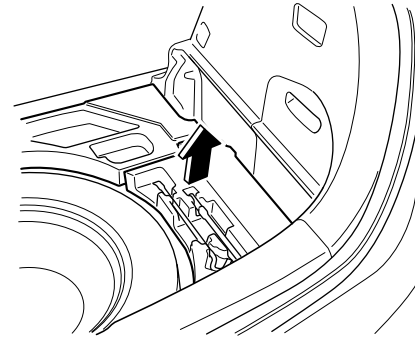

5. Remove the cover.

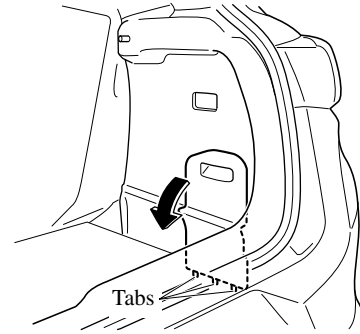

6. Turn the wing bolt and jack screw counterclockwise.

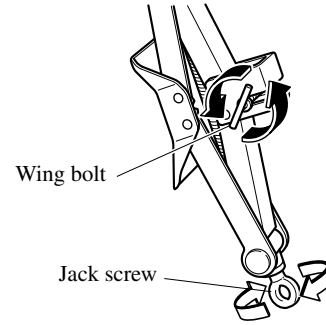

To secure the jack

1. Insert the wing bolt into the jack with the jack screw pointing down and turn the wing bolt clockwise to temporarily tighten it.
2. Turn the jack screw in the direction shown in the figure.

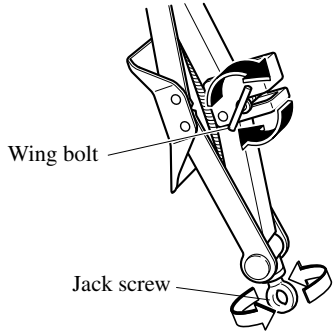

3. Turn the wing bolt completely to secure the jack.

   NOTE
   If the jack is not completely secured, it could rattle while driving. Make sure the jack screw is sufficiently tightened.
4. Insert the cover tabs and install the cover.

   NOTE
   Verify that the cover is securely installed.

Maintenance

- Always keep the jack clean.
- Make sure the moving parts are kept free from dirt or rust.
- Make sure the screw thread is adequately lubricated.

▼ Spare Tire

Your Mazda has a temporary spare tire. The temporary spare tire is lighter and smaller than a conventional tire, and is designed only for emergency use and should be used only for VERY short periods. Temporary spare tires should NEVER be used for long drives or extended periods.

⚠ WARNING

Do not install the temporary spare tire on the front wheels (driving wheels):
Driving with the temporary spare tire on one of the front driving wheels is dangerous. Handling will be affected. You could lose control of the vehicle, especially on ice or snow bound roads, and have an accident. Move a regular tire to the front wheel and install the temporary spare tire to the rear.

⚠ CAUTION

- *When using the temporary spare tire, driving stability may decrease compared to when using only the conventional tire. Drive carefully.*
- *To avoid damage to the temporary spare tire or to the vehicle, observe the following precautions:*
  - *Do not exceed 80 km/h (50 mph).*
  - *Avoid driving over obstacles. Also, do not drive through an automatic car wash. This tire's diameter is smaller than a conventional tire, so the ground clearance is reduced.*

- *Do not use a tire chain on this tire because it will not fit properly.*
- *Do not use your temporary spare tire on any other vehicle, it has been designed only for your Mazda.*
- *Use only one temporary spare tire on your vehicle at the same time.*

To remove the spare tire

1. **(With luggage board)**
   Lift up the luggage board.
2. **(With luggage board)**
   Pull the luggage board outward a little and insert the opposite end into the holders so that the luggage board stands.

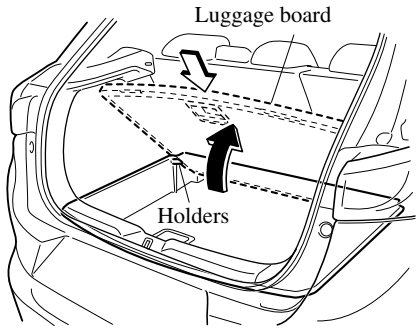

3. Lift the luggage mat.

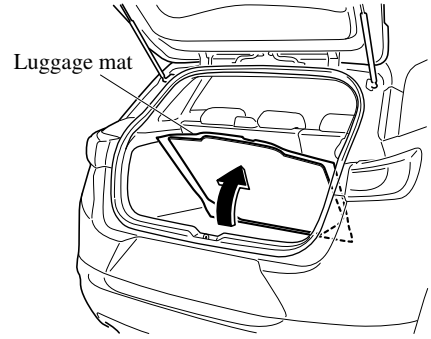

4. For vehicles equipped with a sub-woofer, uncouple the connector.

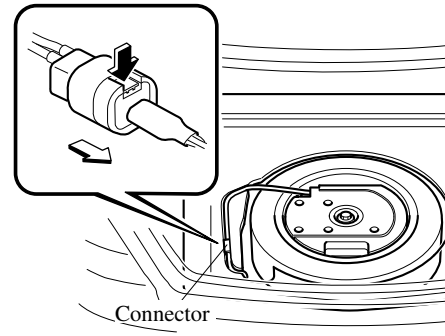

NOTE
Extra strength may be required to uncouple the connector. Be sure to squeeze the tab firmly.

5. For vehicles equipped with a sub-woofer, loosen the hold-down bolt and remove the woofer and spare tire.

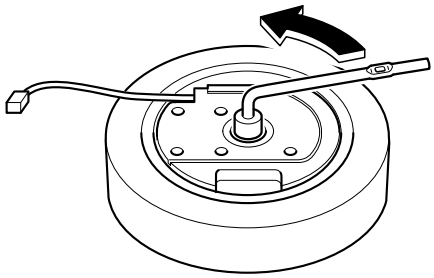

For vehicles not equipped with a sub-woofer, turn the spare tire hold-down bolt counterclockwise and remove the spare tire.

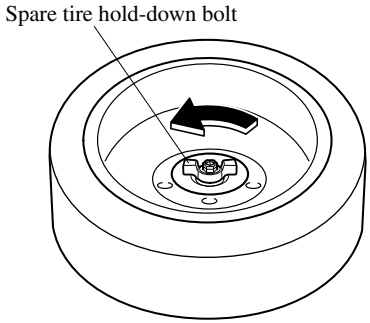

To secure the spare tire

Store the spare tire in the reverse order of removal. After storing, verify that the spare tire is stored securely.

Changing a Flat Tire

NOTE
If the following occurs while driving, it could indicate a flat tire.

- *Steering becomes difficult.*
- *The vehicle begins to vibrate excessively.*
- *The vehicle pulls in one direction.*

If you have a flat tire, drive slowly to a level spot that is well off the road and out of the way of traffic to change the tire. Stopping in traffic or on the shoulder of a busy road is dangerous.

WARNING

Be sure to follow the directions for changing a tire:
Changing a tire is dangerous if not done properly. The vehicle can slip off the jack and seriously injure someone.
No person should place any portion of their body under a vehicle that is supported by a jack.

Never allow anyone inside a vehicle supported by a jack:
Allowing someone to remain in a vehicle supported by a jack is dangerous. The occupant could cause the vehicle to fall resulting in serious injury.

NOTE
Make sure the jack is well lubricated before using it.

1. Park on a hard, level surface off the right-of-way and firmly set the parking brake.
2. Put a vehicle with an automatic transaxle in Park (P), a manual transaxle in Reverse (R) or 1, and turn off the engine.
3. Turn on the hazard warning flasher.
4. Have everyone get out of the vehicle and away from the vehicle and traffic.
5. Remove the jack, tool, and spare tire (page 7-3).
6. Block the wheel diagonally opposite the flat tire. When blocking a wheel, place a tire block both in front and behind the tire.

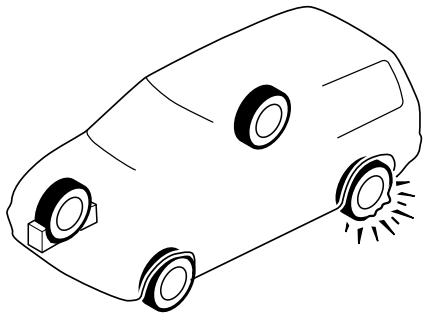

NOTE
When blocking a tire, use rocks or wood blocks of sufficient size if possible to hold the tire in place.

▼ Removing a Flat Tire

⚠ WARNING

When jacking-up a vehicle, always shift the shift lever to 1st or R position (manual transaxle vehicle) or shift the selector lever to P position (automatic transaxle vehicle), apply the parking brake, and place wheel blocks in the position diagonally opposed to the jack:
Changing a flat tire without using wheel blocks is dangerous because the vehicle may move and fall off the jack even with the shift lever in 1st or R position, or the selector lever is in P position, which could result in an accident.

1. If your vehicle is equipped with a wheel cover, pry off the wheel cover with the beveled end of the jack lever.

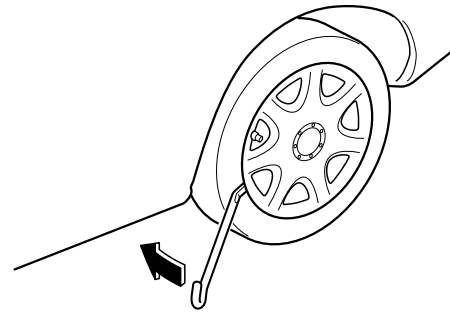

NOTE
Force the end of the jack lever firmly between wheel and cover, or removal will be difficult.

CAUTION

Align the notch on the wheel cover with the valve stem when installing it.

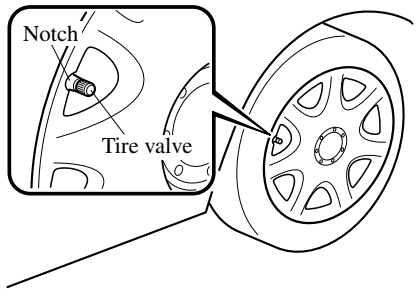

Damage could occur during installation if the wheel cover is not properly aligned.

2. Loosen the lug nuts by turning them counterclockwise one turn each, but do not remove any lug nuts until the tire has been raised off the ground.

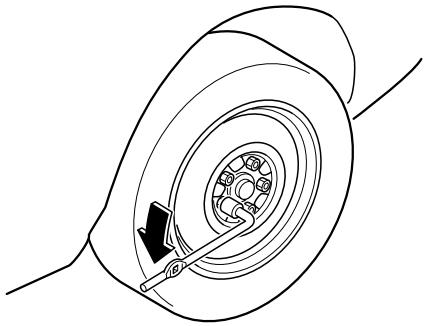

3. Place the jack on the ground.

4. Turn the jack screw in the direction shown in the figure and adjust the jack head so that it is close to the jack-up position.

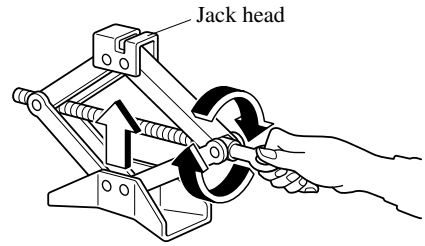

5. Place the jack under the jack-up position closest to the tire being changed with the jack head squarely under the jack-up point.

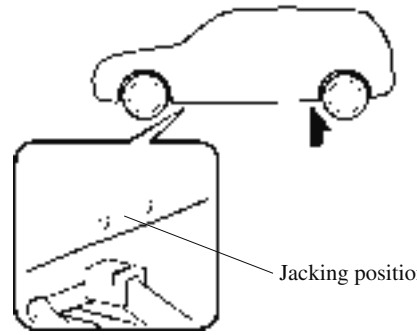

6. Continue raising the jack head gradually by rotating the screw with your hand until the jack head is inserted into the jack-up position.

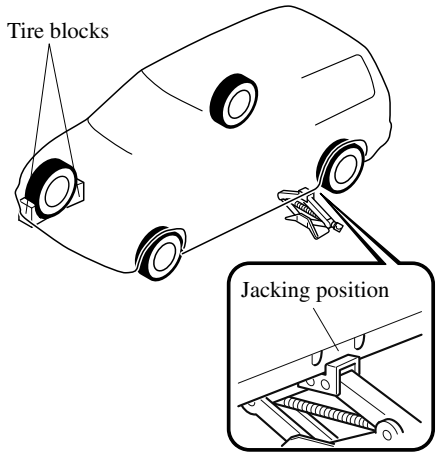

WARNING

Use only the front and rear jacking positions recommended in this manual:
Attempting to jack the vehicle in positions other than those recommended in this manual is dangerous. The vehicle could slip off the jack and seriously injure or even kill someone. Use only the front and rear jacking positions recommended in this manual.

Do not jack up the vehicle in a position other than the designated jack-up position or place any objects on or under the jack:
Jacking up the vehicle in a position other than the designated jack-up position or placing objects on or under the jack is dangerous as it could deform the vehicle body or the vehicle could fall off the jack resulting in an accident.

Use only the jack provided with your Mazda:
Using a jack that is not designed for your Mazda is dangerous. The vehicle could slip off the jack and seriously injure someone.

Never place objects under the jack:
Jacking the vehicle with an object under the jack is dangerous. The jack could slip and someone could be seriously injured by the jack or the falling vehicle.

7. Insert the jack lever and attach the lug wrench to tire jack.

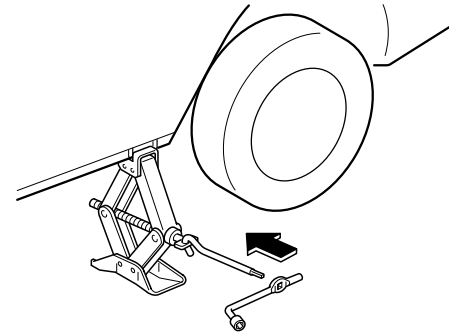

8. Turn the jack handle clockwise and raise the vehicle high enough so that the spare tire can be installed. Before removing the lug nuts, make sure your Mazda is firmly in position and that it cannot slip or move.

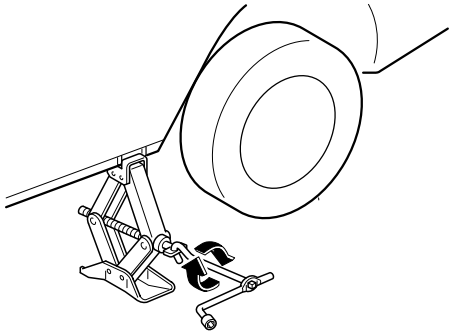

WARNING

Do not jack up the vehicle higher than is necessary:
Jacking up the vehicle higher than is necessary is dangerous as it could destabilize the vehicle resulting in an accident.

Do not start the engine or shake the vehicle while it is jacked up:
Starting the engine or shaking the vehicle while it is jacked up is dangerous as it could cause the vehicle to fall off the jack resulting in an accident.

Never go under the vehicle while it is jacked up:
Going under the vehicle while it is jacked up is dangerous as it could result in death or serious injury if the vehicle were to fall off the jack.

9. Remove the lug nuts by turning them counterclockwise; then remove the wheel and center cap.

▼ Locking Lug Nuts*

If your vehicle has Mazda optional antitheft wheel lug nuts, each wheel will have one locking lug nut that locks the wheel and tire, and you must use a special key to unlock the locking lug nut. This key is stored in the glove compartment.
Register the key and lug nuts with the lock manufacturer by filling out the card provided in the glove compartment and mailing it in the accompanying envelope.
If you lose this key, consult an Authorized Mazda Dealer or use the lock manufacturer's order form, which is with the registration card.
Accessory wheel locks cannot be used on steel wheels. This includes situations when the spare tire is installed. If the spare tire is installed, one of the original lug nuts (which should still be in the vehicle) must be installed in place of the wheel lock.

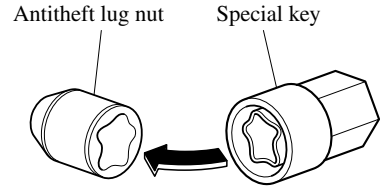

*Some models.

To remove an antitheft lug nut

1. Obtain the special key for the antitheft lug nut.
2. Place the special key on top of the antitheft lug nut, and be sure to hold the key square to it. If you hold the key at an angle, you may damage both key and nut. Do not use a power impact wrench.
3. Place the lug wrench on top of the key and apply pressure. Turn the wrench counterclockwise.

To install the antitheft lug nut

1. Place the special key on top of the nut, and be sure to hold the key square to it. If you hold the key at an angle, you may damage both key and nut. Do not use a power impact wrench.
2. Place the lug wrench on top of the special key, apply pressure, and turn it clockwise.

Nut tightening torque	
N·m (kgf·m, ft·lbf)	108—147 (12—14, 80—108)

▼ Mounting the Spare Tire

1. Remove dirt and grime from the mounting surfaces of the wheel and hub, including the hub bolts, with a cloth.

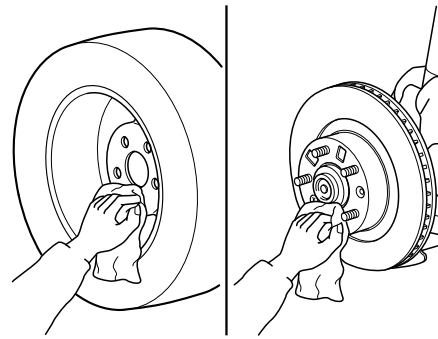

⚠ WARNING

Make sure the mounting surfaces of the wheel, hub and lug nuts are clean before changing or replacing tires:
When changing or replacing a tire, not removing dirt and grime from the mounting surfaces of the wheel, hub and hub bolts is dangerous. The lug nuts could loosen while driving and cause the tire to come off, resulting in an accident.

2. Mount the spare tire.

3. Install the lug nuts with the beveled edge inward; tighten them by hand.

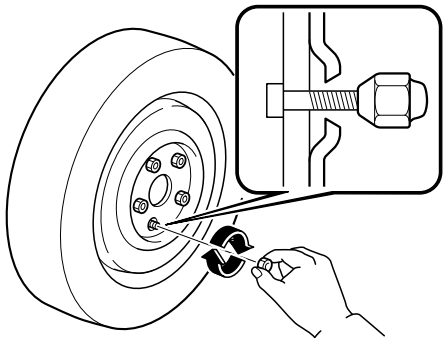

WARNING

Do not apply oil or grease to lug nuts and bolts and do not tighten the lug nuts beyond the recommended tightening torque:
Applying oil or grease to lug nuts and bolts is dangerous. The lug nuts could loosen while driving and cause the tire to come off, resulting in an accident. In addition, lug nuts and bolts could be damaged if tightened more than necessary.

4. Turn the lug wrench counterclockwise and lower the vehicle.

5. Use the lug wrench to tighten the nuts in the order shown.

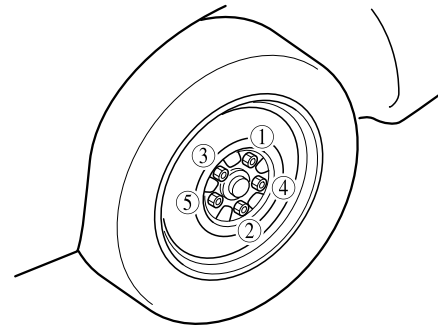

If you are unsure of how tight the nuts should be, have them inspected at an Authorized Mazda Dealer.

Nut tightening torque	
N·m (kgf·m, ft·lbf)	108—147 (12—14, 80—108)

WARNING

Always securely and correctly tighten the lug nuts:
Improperly or loosely tightened lug nuts are dangerous. The wheel could wobble or come off. This could result in loss of vehicle control and cause a serious accident.

Be sure to reinstall the same nuts you removed or replace them with metric nuts of the same configuration:
Because the wheel studs and lug nuts on your Mazda have metric threads, using a non-metric nut is dangerous. On a metric stud, it would not secure the wheel and would damage the stud, which could cause the wheel to slip off and cause an accident.

6. **(Without flat tire belt)**
   Store the damaged tire in the luggage compartment.
   (With flat tire belt)
   Remove the luggage compartment cover (if equipped).
   Refer to Luggage Compartment on page 3-22.

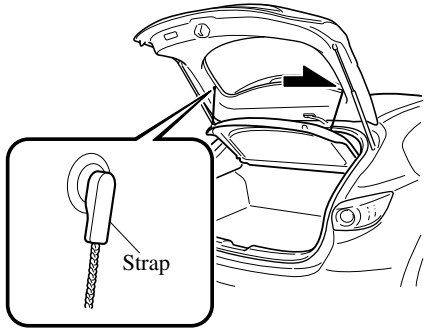

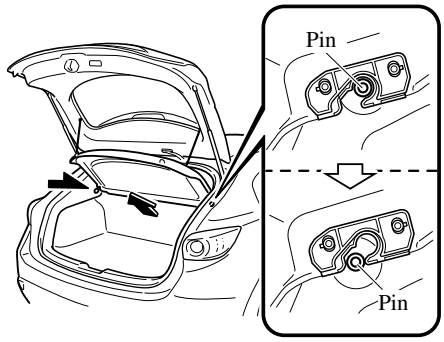

7. Remove the belt for securing the flat tire.

8. **(With luggage board)**
   Pull the luggage board outward and place it on top of the luggage mat.

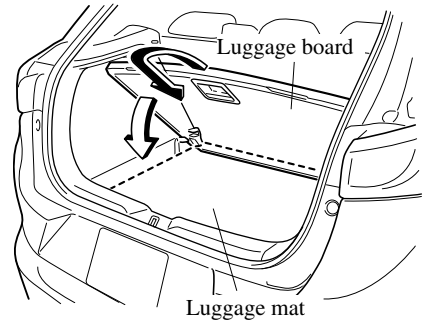

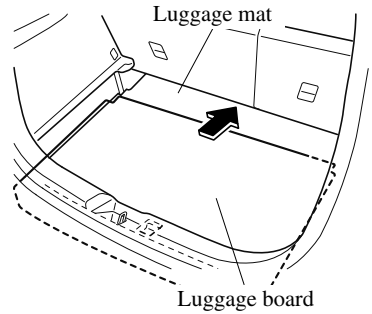

9. Remove the center cap by tapping it with the lug wrench.

10. Thread the belt through the rear seat as shown in the figure.

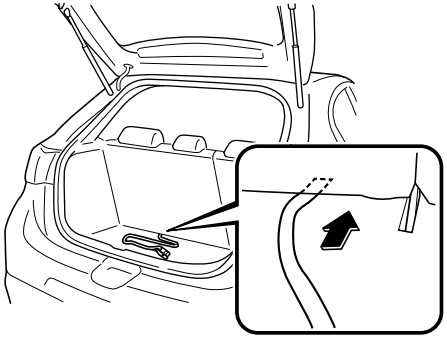

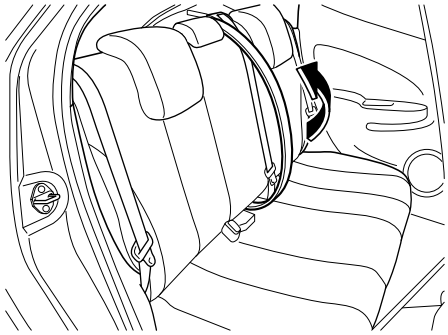

11. Place the flat tire in the luggage compartment.

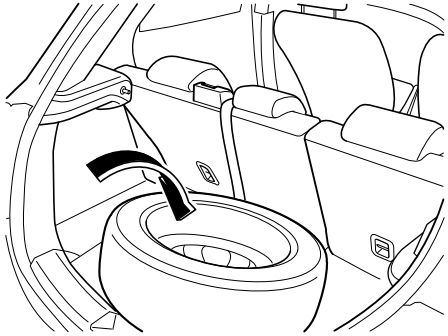

12. Thread the buckle through the wheel as shown in the figure.

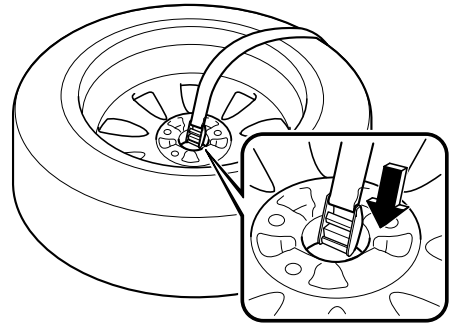

13. Thread the belt through the buckle while pressing the tire to the seatback.

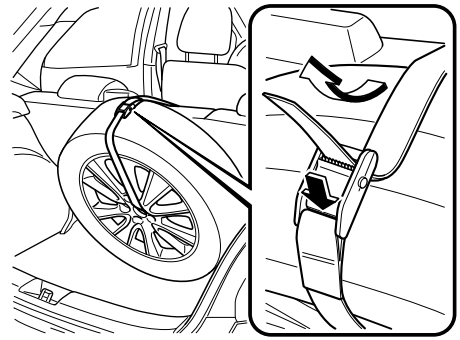

14. Pull the belt end to secure the flat tire.

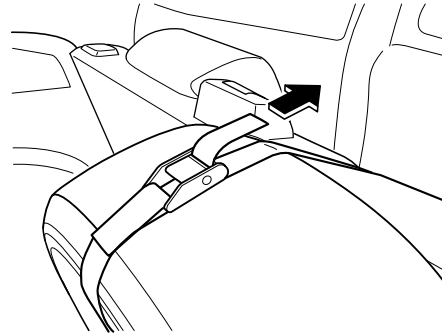

15. Insert the luggage compartment cover from the top of the luggage compartment opening with the cloth side of the cover facing outward, and slide it between the flat tire and the inside perimeter of the luggage compartment opening.

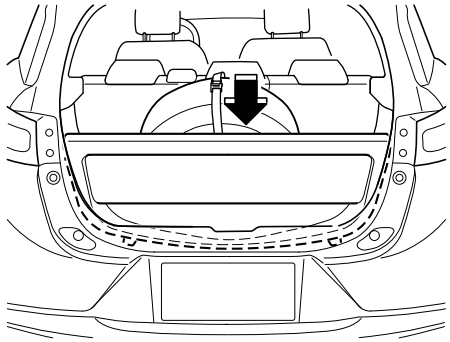

16. Check the tire inflation pressure. Refer to the specification charts on page 9-7.
17. Have the flat tire repaired or replaced as soon as possible.

WARNING

Do not drive with any tires that have incorrect air pressure:
Driving on tires with incorrect air pressure is dangerous. Tires with incorrect pressure could affect handling and result in an accident. When you check the regular tires' air pressure, check the spare tire, too.

NOTE
To prevent the jack and tool from rattling, store them properly.

Jump-Starting

Jump-starting is dangerous if done incorrectly. So follow the procedure carefully. If you feel unsure about jump-starting, we strongly recommend that you have a competent service technician do the work.

WARNING

Follow These Precautions Carefully:
To ensure safe and correct handling of the battery, read the following precautions carefully before using the battery or inspecting it.

Keep flames and sparks away from open battery cells and do not allow metal tools to contact the positive (+) or negative (−) terminal of the battery when working near a battery. Do not allow the positive (+) terminal to contact the vehicle body:
Flames and sparks near open battery cells are dangerous. Hydrogen gas, produced during normal battery operation, could ignite and cause the battery to explode. An exploding battery can cause serious burns and injuries. Keep all flames including cigarettes and sparks away from open battery cells.

Keep all flames and sparks away from open battery cells because hydrogen gas is produced from open battery cells while charging the battery or adding battery fluid:
Flames and sparks near open battery cells are dangerous. Hydrogen gas, produced during normal battery operation, could ignite and cause the battery to explode. An exploding battery can cause serious burns and injuries. Keep all flames including cigarettes and sparks away from open battery cells.

Do not jump-start a frozen battery or one with a low fluid level:
Jump-starting a frozen battery or one with a low fluid level is dangerous. It may rupture or explode, causing serious injury.

Connect the negative cable to a good ground point away from the battery:
Connecting the end of the second jumper cable to the negative (−) terminal of the discharged battery is dangerous.
A spark could cause the gas around the battery to explode and injure someone.

Route the jumper cables away from parts that will be moving:
Connecting a jumper cable near or to moving parts (cooling fans, belts) is dangerous. The cable could get caught when the engine starts and cause serious injury.

CAUTION

Use only a 12 V booster system. You can damage a 12 V starter, ignition system, and other electrical parts beyond repair with a 24 V power supply (two 12 V batteries in series or a 24 V motor generator set).

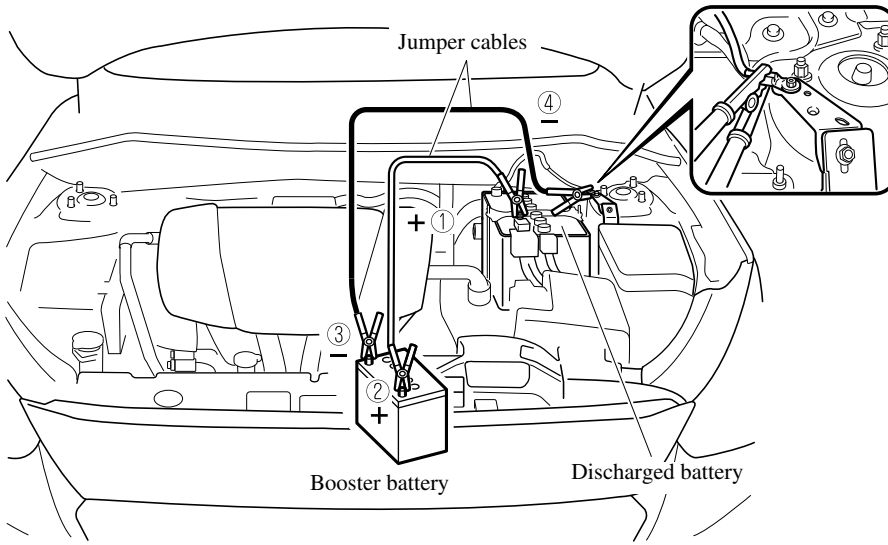

1. Remove the battery cover.

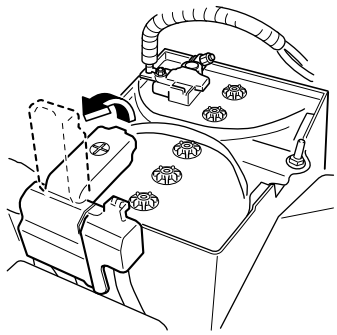

2. Make sure the booster battery is 12 V and that its negative terminal is grounded.
3. If the booster battery is in another vehicle, do not allow both vehicles to touch. Turn off the engine of the vehicle with the booster battery and all unnecessary electrical loads in both vehicles.
4. Connect the jumper cables in the exact sequence as in the illustration.

- Connect one end of a cable to the positive terminal on the discharged battery (1).
- Attach the other end to the positive terminal on the booster battery (2).
- Connect one end of the other cable to the negative terminal of the booster battery (3).
- Connect the other end to the ground point indicated in the illustration away from the discharged battery (4).

5. Start the engine of the booster vehicle and run it a few minutes. Then start the engine of the other vehicle.
6. When finished, carefully disconnect the cables in the reverse order described in the illustration.
7. If the battery cover has been removed, install it in the reverse order of removal.

NOTE
Verify that the covers are securely installed.

Starting a Flooded Engine

If the engine fails to start, it may be flooded (excessive fuel in the engine).

Follow this procedure:

1. If the engine does not start within 5 seconds on the first try, wait 10 seconds and try again.
2. Make sure the parking brake is on.
3. Depress the accelerator all the way and hold it there.
4. Depress the clutch pedal (Manual transaxle) or the brake pedal (Automatic transaxle), then press the push button start. If the engine starts, release the accelerator immediately because the engine will suddenly rev up.
5. If the engine fails to start, crank it without depressing the accelerator.

If the engine still does not start using the previous procedure, have your vehicle inspected by an Authorized Mazda Dealer.

Push-Starting

Do not push-start your Mazda.

WARNING

Never tow a vehicle to start it:
Towing a vehicle to start it is dangerous. The vehicle being towed could surge forward when its engine starts, causing the 2 vehicles to collide. The occupants could be injured.

CAUTION

Do not push-start a vehicle that has a manual transaxle. It can damage the emission control system.

NOTE
You cannot start a vehicle with an automatic transaxle by pushing it.

Overheating

If the high engine coolant temperature warning light turns on, the vehicle loses power, or you hear a loud knocking or pinging noise, the engine is probably too hot.

WARNING

Pull over to a safe location, then switch the ignition off and make sure the fan is not running before attempting to work near the cooling fan:
Working near the cooling fan when it is running is dangerous. The fan could continue running indefinitely even if the engine has stopped and the engine compartment temperature is high. You could be hit by the fan and seriously injured.

Do not remove either cooling system cap when the engine and radiator are hot:
When the engine and radiator are hot, scalding coolant and steam may shoot out under pressure and cause serious injury.

Open the hood ONLY after steam is no longer escaping from the engine:
Steam from an overheated engine is dangerous. The escaping steam could seriously burn you.

If the high engine coolant temperature warning light turns on:

1. Drive safely to the side of the road and park off the right-of-way.
2. Put a vehicle with an automatic transaxle in park (P), a manual transaxle in neutral.
3. Apply the parking brake.
4. Turn off the air conditioner.
5. Check whether coolant or steam is escaping from the engine compartment.

   If steam is coming from the engine compartment:
   Do not go near the front of the vehicle.
   Stop the engine.
   Wait until the steam dissipates, then open the hood and start the engine.

   If neither coolant nor steam is escaping:
   Open the hood and idle the engine until it cools.

   CAUTION

   If the cooling fan does not operate while the engine is running, the engine temperature will increase. Stop the engine and call an Authorized Mazda Dealer.
6. Make sure the cooling fan is operating, then turn off the engine after the temperature has decreased.
7. When cool, check the coolant level.

If it is low, look for coolant leaks from the radiator and hoses.

If you find a leak or other damage, or if coolant is still leaking:
Stop the engine and call an Authorized Mazda Dealer.

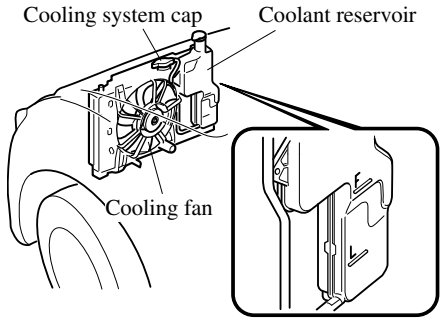

If you find no problems, the engine is cool, and no leaks are obvious:
Carefully add coolant as required (page 6-25).

CAUTION

If the engine continues to overheat or frequently overheats, have the cooling system inspected. The engine could be seriously damaged unless repairs are made. Consult an Authorized Mazda Dealer.

Towing Description

We recommend that towing be done only by an Authorized Mazda Dealer or a commercial tow-truck service.

Proper lifting and towing are necessary to prevent damage to the vehicle. Particularly when towing an AWD vehicle, where all the wheels are connected to the drive train, proper transporting of the vehicle is absolutely essential to avoid damaging the drive system. Government and local laws must be followed.

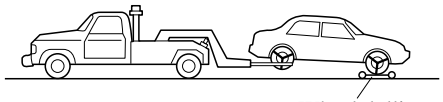

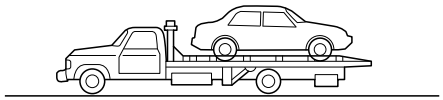

A towed 2WD vehicle should have its drive wheels (front wheels) off the ground. If excessive damage or other conditions prevent this, use wheel dollies.

When towing a 2WD vehicle with the rear wheels on the ground, release the parking brake.
Refer to Electric Parking Brake (EPB) on page 4-57.

A towed AWD vehicle must have all its wheels off the ground.

WARNING

Always tow an AWD vehicle with all four wheels off the ground:
Towing an AWD vehicle with either the front or rear wheels on the ground is dangerous as the drive train could be damaged, or the vehicle could trail away from the tow truck and cause an accident. If the drive train has been damaged, transport the vehicle on a flatbed truck.

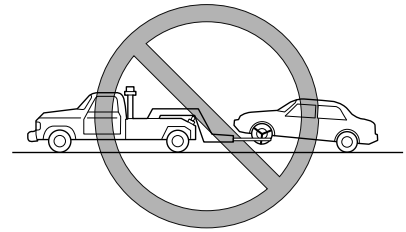

CAUTION

➢ *Do not tow the vehicle pointed backward with driving wheels on the ground. This may cause internal damage to the transaxle.*

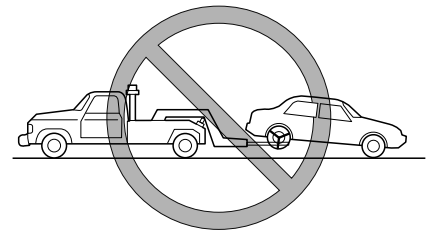

➢ *Do not tow with sling-type equipment. This could damage your vehicle. Use wheel-lift or flatbed equipment.*

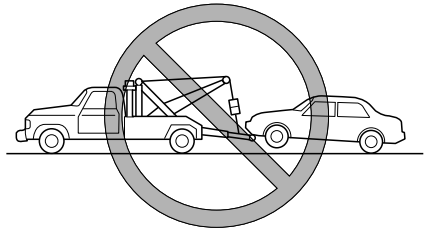

➢ *If the parking brake cannot be released when towing the vehicle, transport the vehicle with all front and rear wheels raised off the ground as shown in the figure. If the vehicle is towed without raising the wheels off the ground, the brake system could be damaged.*

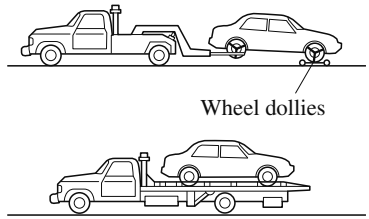

Tiedown Hooks*

⚠ CAUTION

Do not use the front tiedown eyelet for towing the vehicle.
They have been designed only for securing the vehicle to a transport vessel during shipping.
Using the eyelet for any other purpose could result in the vehicle being damaged.

▼ Tiedown Hook-Front

1. Remove the tiedown eyelet and the lug wrench from the luggage compartment (page 7-3).
2. Wrap a jack lever or similar tool with a soft cloth to prevent damage to a painted bumper, and open the cap located on the front bumper.

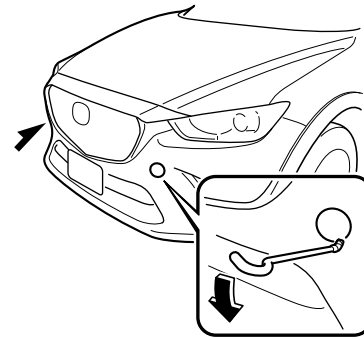

⚠ CAUTION

Do not use excessive force as it may damage the cap or scratch the painted bumper surface.

*Some models.

NOTE
Remove the cap completely and store it so as not to lose it.

3. Securely install the tiedown eyelet using the lug wrench.

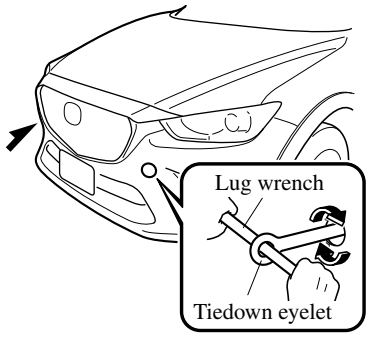

4. Hook the tying rope to the tiedown eyelet.

CAUTION

If the tiedown eyelet is not securely tightened, it may loosen or disengage from the bumper when tying the vehicle. Make sure that the tiedown eyelet is securely tightened to the bumper.

▼ Tiedown Hook-Rear

The hook positioned under the rear bumper on the right side is for tying down the vehicle during transport, and it cannot be used for towing other vehicles.
It can be used as a towing hook only when the vehicle must be towed by another vehicle in an emergency case such as when the vehicle is stuck in snow, however, it may damage the bumper.

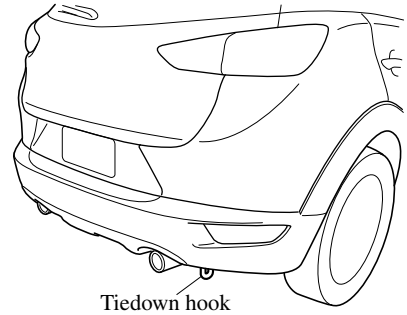

CAUTION

When using the hook in such emergency cases, observe the following so as not to damage the tiedown hook or the vehicle body.

- *The vehicle must be pulled straight to the rear so that no load is applied to the vehicle in the lateral direction.*
- *The bumper may be damaged if the tie down hook is used as a towing hook.*
- *When using a metal chain or wire cable, wrap a cloth around the attachment area. If the metal chain or wire cable contacts the bumper directly, the bumper could be scratched or damaged.*

If a Warning Light Turns On or Flashes

If any warning light turns on/flashes, take appropriate action for each light. There is no problem if the light turns off, however if the light does not turn off or turns on/flashes again, consult an Authorized Mazda Dealer.

(Vehicles with type B audio)

The details for some warnings can be viewed on the center display.

1. If the warning light is turned on, select icon on the home screen to display the application screen.
2. Select “Vehicle Status Monitor”.
3. Select “Warning Guidance” to display the current warnings.
4. Select the applicable warning to view the warning details.

▼ Stop Vehicle in Safe Place Immediately

If any of the following warning lights turns on, the system may have a malfunction. Stop the vehicle in a safe place immediately and contact an Authorized Mazda Dealer.

Warning/Indicator Lights and Warning Sounds

Signal	Warning
BRAKE Brake System Warning Light	This warning has the following functions: **Parking brake warning/Warning light inspection** The light illuminates when the parking brake is applied with the ignition switched to START or ON. It turns off when the parking brake is released. **When the light turns on** If the brake system warning light remains turned on even though the parking brake is released, the brake fluid may be low or there could be a problem with the brake system. Park the vehicle in a safe place immediately and contact an Authorized Mazda Dealer. **When the light is flashing** The light flashes if the Electric Parking Brake (EPB) has a malfunction. If the light remains flashing even if the Electric Parking Brake (EPB) switch is operated, consult an Authorized Mazda Dealer as soon as possible. **WARNING** ***Do not drive with the brake system warning light illuminated. Contact an Authorized Mazda Dealer to have the brakes inspected as soon as possible:*** *Driving with the brake system warning light illuminated is dangerous. It indicates that your brakes may not work at all or that they could completely fail at any time. If this light remains illuminated, after checking that the parking brake is fully released, have the brakes inspected immediately.* **CAUTION** *In addition, the effectiveness of the braking may diminish so you may need to depress the brake pedal more strongly than normal to stop the vehicle.*
BRAKE ABS ABS Electronic Brake Force Distribution System Warning	If the electronic brake force distribution control unit determines that some components are operating incorrectly, the control unit may illuminate the brake system warning light and the ABS warning light simultaneously. The problem is likely to be the electronic brake force distribution system. **WARNING** ***Do not drive with both the ABS warning light and brake warning light illuminated. Have the vehicle towed to an Authorized Mazda Dealer to have the brakes inspected as soon as possible:*** *Driving when the brake system warning light and ABS warning light are illuminated simultaneously is dangerous.* *When both lights are illuminated, the rear wheels could lock more quickly in an emergency stop than under normal circumstances.*

Signal	Warning
Charging System Warning Light	If the warning light illuminates while driving, it indicates a malfunction of the alternator or of the charging system. Drive to the side of the road and park off the right-of-way. Consult an Authorized Mazda Dealer. **CAUTION** *Do not continue driving when the charging system warning light is illuminated because the engine could stop unexpectedly.*
Engine Oil Warning Light	This warning light indicates low engine oil pressure. **CAUTION** *Do not run the engine if the oil pressure is low. Otherwise, it could result in extensive engine damage.* If the light illuminates or the warning indication is displayed while driving: 1. Drive to the side of the road and park off the right-of-way on level ground. 2. Turn off the engine and wait 5 minutes for the oil to drain back into the oil pan. 3. Inspect the engine oil level (page 6-25). If it's low, add the appropriate amount of engine oil while being careful not to overfill. **CAUTION** *Do not run the engine if the oil level is low. Otherwise, it could result in extensive engine damage.* 4. Start the engine and check the warning light. If the light remains illuminated even though the oil level is normal or after adding oil, stop the engine immediately and have your vehicle towed to an Authorized Mazda Dealer.
(Red) High Engine Coolant Temperature Warning Light	The light flashes when the engine coolant temperature is extremely high, and illuminates when the engine coolant temperature increases further. **Handling Procedure** **Flashing light** Drive slowly to reduce engine load until you can find a safe place to stop the vehicle and wait for the engine to cool down. **Illuminated light** This indicates the possibility of overheating. Park the vehicle in a safe place immediately and stop the engine. Refer to Overheating on page 7-22. **CAUTION** *Do not drive the vehicle with the high engine coolant temperature warning light illuminated. Otherwise, it could result in damage to the engine.*

Warning/Indicator Lights and Warning Sounds

Signal	Warning
Power Steering Malfunction Indicator Light	The light illuminates/flashes if the electric power steering has a malfunction. If the light illuminates/flashes, stop the vehicle in a safe place and do not operate the steering wheel. There is no problem if the light turns off after a while. Contact an Authorized Mazda Dealer if the light illuminates/flashes continuously. ***NOTE*** *•If the indicator light illuminates/flashes, the power steering will not operate normally. If this happens, the steering wheel can still be operated, however, the operation may feel heavy compared to normal, or the steering wheel could vibrate when turning.* *•Repeatedly jerking the steering wheel left and right while the vehicle is stopped or moving extremely slowly will cause the power steering system to go into protective mode which will make the steering feel heavy, but this does not indicate a problem. If this occurs, park the vehicle safely and wait several minutes for the system to return to normal.*

▼ Contact Authorized Mazda Dealer and Have Vehicle Inspected

If any of the following warning lights or the indicator light turns on/flashes, the system may have a malfunction. Contact an Authorized Mazda Dealer to have your vehicle inspected.

Signal	Warning
ABS ABS Warning Light	If the ABS warning light stays on while you're driving, the ABS control unit has detected a system malfunction. If this occurs, your brakes will function normally as if the vehicle had no ABS. Should this happen, consult an Authorized Mazda Dealer as soon as possible. ***NOTE*** *•When the engine is jump-started to charge the battery, uneven rpm occurs and the ABS warning light may illuminate. If this occurs, it is the result of the weak battery and does not indicate an ABS malfunction.* *Recharge the battery.* *•The brake assist system does not operate while the ABS warning light is illuminated.*
Master Warning Light	**(Vehicles with type B audio)** The light turns on when the system has a malfunction. Operate the center display and verify the content. Refer to If a Warning Light Turns On or Flashes on page 7-27. **(Vehicles with type A audio)** The light illuminates continuously if any one of the following occurs. Consult an Authorized Mazda Dealer. •There is a malfunction in the battery management system. •There is a malfunction in the brake switch.
Electric Parking Brake (EPB) Warning Light	The warning light illuminates when the system has a malfunction. Have your vehicle inspected at an Authorized Mazda Dealer.

Signal	Warning
(Red) Brake Pedal Operation Demand Warning Light	**When only flashing** Flashes if there is the possibility of the vehicle not being held in the stopped position by the AUTOHOLD function, such as on steep slopes. Depress and hold your foot on the brake pedal. **When flashing and beep sound is activated at the same time** The warning light flashes and the beep sound is activated for about five seconds if there is a problem with the system. If the warning light flashes and the warning sound is activated, immediately depress the brake pedal and stop using the AUTOHOLD function then contact an Authorized Mazda Dealer. **WARNING** ***Immediately depress the brake pedal if the warning light flashes and the beep sound is activated while using the AUTOHOLD function:*** *Because the AUTOHOLD function is canceled forcibly, the vehicle may move unexpectedly and result in an accident.*
Check Engine Light	If this light illuminates while driving, the vehicle may have a problem. It is important to note the driving conditions when the light illuminated and consult an Authorized Mazda Dealer. The check engine light may illuminate in the following cases: ・The fuel tank level being very low or approaching empty. ・The engine's electrical system has a problem. ・The emission control system has a problem. ・The fuel-filler cap is missing or not tightened securely. If the check engine light remains on, or it flashes continuously , do not drive at high speeds and consult an Authorized Mazda Dealer as soon as possible.
AT Automatic Transaxle Warning Light*	The light illuminates when the transaxle has a problem. **CAUTION** *If the automatic transaxle warning light illuminates, the transaxle has an electrical problem. Continuing to drive your Mazda in this condition could cause damage to your transaxle. Consult an Authorized Mazda Dealer as soon as possible.*
(Turns on) TCS/DSC Indicator Light	If the light stays on, the TCS, DSC or the brake assist system may have a malfunction and they may not operate correctly. Take your vehicle to an Authorized Mazda Dealer.

*Some models.

Warning/Indicator Lights and Warning Sounds

Signal	Warning
Air Bag/Front Seat Belt Pretensioner System Warning Light	A system malfunction is indicated if the warning light constantly flashes, constantly illuminates or does not illuminate at all when the ignition is switched ON. If any of these occur, consult an Authorized Mazda Dealer as soon as possible. The system may not operate in an accident. **WARNING** ***Never tamper with the air bag/pretensioner systems and always have an Authorized Mazda Dealer perform all servicing and repairs:*** *Self-servicing or tampering with the systems is dangerous. An air bag/pretensioner could accidentally activate or become disabled causing serious injury or death.*
4WD AWD Warning Light*	**When the light is turned on** The light turns on under the following conditions. The system may have a malfunction. Have the vehicle checked at an Authorized Mazda Dealer. •When there is a malfunction in the AWD system. •When there is a large difference between the tire size of the front and rear wheels. **When the light is flashing** Park the vehicle in a safe place. After a few moments, if the warning light stops flashing, you can resume driving. If the light does not stop flashing, contact an Authorized Mazda Dealer. •When the differential oil temperature is excessively high. •When there is a large difference between the front and rear wheel rotation, such as when trying to remove the vehicle from mud.
(Flashing) Tire Pressure Monitoring System Warning Light*	If the tire pressure monitoring system has a malfunction, the tire pressure warning light flashes. Have your vehicle checked by an Authorized Mazda Dealer as soon as possible. **WARNING** ***If the tire pressure monitoring system warning light illuminates or flashes, or the tire pressure warning beep sound is heard, decrease vehicle speed immediately and avoid sudden maneuvering and braking:*** *If the tire pressure monitoring system warning light illuminates or flashes, or the tire pressure warning beep sound is heard, it is dangerous to drive the vehicle at high speeds, or perform sudden maneuvering or braking. Vehicle drivability could worsen and result in an accident.* *To determine if you have a slow leak or a flat, pull over to a safe position where you can check the visual condition of the tire and determine if you have enough air to proceed to a place where air may be added and the system monitored again by an Authorized Mazda Dealer or a tire repair station.* ***Do not ignore the TPMS Warning Light:*** *Ignoring the TPMS warning light is dangerous, even if you know why it is illuminated. Have the problem taken care of as soon as possible before it develops into a more serious situation that could lead to tire failure and a dangerous accident.*

*Some models.

Signal	Warning
(Red) (Turns on) KEY Warning Light	If any malfunction occurs in the keyless entry system, it illuminates continuously. **CAUTION** *If the key warning indicator light illuminates or the push button start indicator light (amber) flashes, the engine may not start. If the engine cannot be started, try starting it using the emergency operation for starting the engine, and have the vehicle inspected at an Authorized Mazda Dealer as soon as possible.* Refer to Emergency Operation for Starting the Engine on page 4-9.
Security Indicator Light	If the engine does not start with the correct key, and the security indicator light remains illuminated or flashing, try the following: Make sure the key is within the operational range for signal transmission. Switch the ignition off, and then restart the engine. If the engine does not start after 3 or more tries, contact an Authorized Mazda Dealer.
(Amber) High Beam Control System (HBC) Warning Light*	The light remains turned on if there is a problem with the system. Have your vehicle inspected at an Authorized Mazda Dealer. ***NOTE*** *If the Forward Sensing Camera (FSC) field of view is impaired during bad weather conditions (such as rain, fog, and snow) and when the windshield is dirty, the warning indication/warning light for the High Beam Control System (HBC) may display/turn on. However, this does not indicate a problem.*
(Turns on) Lane Departure Warning System (LDWS) Warning Light*	·The warning light remains turned on if there is a problem with the system. Have your vehicle inspected at an Authorized Mazda Dealer. ·The LDWS does not operate when the warning light illuminates. **CAUTION** ➢ *A problem in the system may be indicated under the following conditions. Have your vehicle inspected at an Authorized Mazda Dealer.* ➢ *When the light remains turned on while driving the vehicle.* *When the system is canceled automatically, the light turns on. Normally, the system restores automatically and the light turns off, however, if the light remains turned on, there may be a problem with the system.* ➢ *The light does not illuminate when the ignition is switched ON.* ➢ *Always use tires for all wheels that are of the specified size, and the same manufacture, brand, and tread pattern. In addition, do not use tires with significantly different wear patterns on the same vehicle. If such improper tires are used, the LDWS may not operate normally.* ➢ *When an emergency spare tire is used, the system may not operate normally.* ***NOTE*** *If the windshield area in front of the Forward Sensing Camera (FSC) is fogged or obstructed, the light turns on temporarily. If the light remains turned on, there may be a problem with the system.*

*Some models.

Warning/Indicator Lights and Warning Sounds

Signal	Warning
(Amber) Mazda Radar Cruise Control with Stop & Go function (MRCC with Stop & Go function) Warning Light*	The warning light turns on if there is a malfunction in the system while the Mazda Radar Cruise Control with Stop & Go function (MRCC with Stop & Go function) system is on. Have your vehicle inspected at an Authorized Mazda Dealer.
Blind Spot Monitoring (BSM) OFF Indicator Light*	A problem in the system may be indicated under the following conditions. Have your vehicle inspected at an Authorized Mazda Dealer. ・The light does not turn on when the ignition is switched ON. ・The light remains on even when the Blind Spot Monitoring (BSM) system can be operated. ・The light turns on while driving the vehicle. ***NOTE*** *If the vehicle is driven on a road with less traffic and few vehicles that the radar sensors can detect, the system may pause (The Blind Spot Monitoring (BSM) OFF indicator light in the instrument cluster illuminates). However, it does not indicate a malfunction.*
LED Headlight Warning Light*	This light illuminates if there is a malfunction in the LED headlight. Have your vehicle inspected by an Authorized Mazda Dealer.

▼ Taking Action

Take the appropriate action and verify that the warning light turns off.

Signal	Warning	Action to be taken
Low Fuel Warning Light	The light turns on when the remaining fuel is about 9.0 L (2.3 US gal, 1.9 Imp gal). ***NOTE*** *The light illumination timing may vary because fuel inside the fuel tank moves around according to the driving conditions and the vehicle posture.*	Add fuel.
Check Fuel Cap Warning Light	If the check fuel cap warning light illuminates while driving, the fuel-filler cap may not be installed properly.	Stop the engine and reinstall the fuel-filler cap. Refer to Refueling on page 3-27.

 *Some models.

Signal	Warning	Action to be taken
PASS Seat Belt Warning Light	**Except Mexico** The seat belt warning light turns on if the driver or front passenger's seat is occupied and the seat belt is not fastened with the ignition switched ON. If the driver or front passenger's seat belt is unfastened (only when the front passenger's seat is occupied) and the vehicle is driven at a speed faster than about 20 km/h (12 mph), the warning light flashes. After a short time, the warning light stops flashing, but remains illuminated. ***NOTE*** *·The warning light flashes for about 6 seconds if the driver's seat belt is not fastened when the ignition is switched ON.* *·To allow the front passenger occupant classification sensor to function properly, do not place and sit on an additional seat cushion on the front passenger's seat. The sensor may not function properly because the additional seat cushion could cause sensor interference.* *·If a small child is seated on the front passenger's seat, the warning light may not operate.*	Fasten the seat belts.

Warning/Indicator Lights and Warning Sounds

Signal	Warning	Action to be taken
PASS Seat Belt Warning Light	**Mexico** The seat belt warning light turns on if the driver or front passenger's seat is occupied and the seat belt is not fastened with the ignition switched ON. If the driver or front passenger's seat belt is unfastened (only when the front passenger's seat is occupied) and the vehicle is driven at a speed faster than about 20 km/h (12 mph), the warning light flashes. After a short time, the warning light stops flashing, but remains illuminated. If a seat belt remains unfastened, the warning light flashes again for a given period of time. ***NOTE*** *•Placing heavy items on the front passenger's seat may cause the front passenger's seat belt warning function to operate depending on the weight of the item.* *•To allow the front passenger seat weight sensor to function properly, do not place and sit on an additional seat cushion on the front passenger's seat. The sensor may not function properly because the additional seat cushion could cause sensor interference.* *•If a small child is seated on the front passenger's seat, the warning light may not operate.*	Fasten the seat belts.
Door-Ajar Warning Light	The light turns on if any door/liftgate is not closed securely.	Close the door/liftgate securely.
Low Washer Fluid Level Warning Light*	This warning light indicates that little washer fluid remains.	Add washer fluid (page 6-27).

 *Some models.

Signal	Warning	Action to be taken
(Amber) Smart Brake Support/ Smart City Brake Support (SBS/SCBS) Warning Light*	The light turns on if the windshield or the radar sensor are dirty, or there is a malfunction in the system.	**(Vehicles with type B audio)** Verify the reason why the warning light is illuminated on the center display (page 7-27). If the reason why the warning light is illuminated is due to a dirty windshield, clean the windshield. If the warning light is illuminated because of a dirty radar sensor, clean the front emblem. For any other reasons, have the vehicle inspected at an Authorized Mazda Dealer. **(Vehicles without type B audio)** If the reason why the warning light is illuminated is due to a dirty windshield, clean the windshield. For any other reasons, have the vehicle inspected at an Authorized Mazda Dealer.

Tire Pressure Monitoring System Warning Light (Turns on)*

Take the appropriate action and verify that the warning light turns off.

*Some models.

Warning/Indicator Lights and Warning Sounds

Warning
When the warning light illuminates, and the warning beep sound is heard when tire pressure is too low in one or more tires. **WARNING** ***If the tire pressure monitoring system warning light illuminates or flashes, or the tire pressure warning beep sound is heard, decrease vehicle speed immediately and avoid sudden maneuvering and braking:*** *If the tire pressure monitoring system warning light illuminates or flashes, or the tire pressure warning beep sound is heard, it is dangerous to drive the vehicle at high speeds, or perform sudden maneuvering or braking. Vehicle drivability could worsen and result in an accident.* *To determine if you have a slow leak or a flat, pull over to a safe position where you can check the visual condition of the tire and determine if you have enough air to proceed to a place where air may be added and the system monitored again by an Authorized Mazda Dealer or a tire repair station.* ***Do not ignore the TPMS Warning Light:*** *Ignoring the TPMS warning light is dangerous, even if you know why it is illuminated. Have the problem taken care of as soon as possible before it develops into a more serious situation that could lead to tire failure and a dangerous accident.*

Action to be taken
Inspect the tires and adjust to the specified inflation pressure (page 6-36).

CAUTION

When replacing/repairing the tires or wheels or both, have the work done by an Authorized Mazda Dealer, or the tire pressure sensors may be damaged.

NOTE

- *Perform tire pressure adjustment when the tires are cold. Tire pressure will vary according to the tire temperature, therefore let the vehicle stand for 1 hour or only drive it 1.6 km (1 mile) or less before adjusting the tire pressures. When pressure is adjusted on hot tires to the cold inflation pressure, the TPMS warning light/beep may turn on after the tires cool and pressure drops below specification.*
  Also, an illuminated TPMS warning light, resulting from the tire air pressure dropping due to cold ambient temperature, may turn off if the ambient temperature rises. In this case, it will also be necessary to adjust the tire air pressures. If the TPMS warning light illuminates due to a drop in tire air pressure, make sure to check and adjust the tire air pressures.
- *After adjusting the tire air pressures, it may require some time for the TPMS warning light to turn off. If the TPMS warning light remains illuminated, drive the vehicle at a speed of at least 25 km/h (16 mph) for 10 minutes, and then verify that it turns off.*
- *Tires lose air naturally over time and the TPMS cannot tell if the tires are getting too soft over time or you have a flat. However, when you find one low tire in a set of four-that is an indication of trouble; you should have someone drive the vehicle slowly forward so you can inspect any low tire for cuts and any metal objects sticking through tread or sidewall. Put a few drops of water in the valve stem to see if it bubbles indicating a bad valve. Leaks need to be addressed by more than simply refilling the trouble tire as leaks are dangerous — take it to an Authorized Mazda Dealer which has all the equipment to fix tires, TPMS systems and order the best replacement tire for your vehicle.*

If the warning light illuminates again even after the tire pressures are adjusted, there may be a tire puncture.

Warning/Indicator Lights and Warning Sounds

KEY Warning Light

Take the appropriate action and verify that the warning light turns off.

Signal	Cause	Action to be taken
(Red) (Flashing)	The advanced key battery is dead.	Replace the key battery (page 6-34).
	The advanced key is not within the operation range.	Bring the advanced key into the operation range (page 3-7).
	The advanced key is placed in areas inside the cabin where it is difficult for the key to be detected.	
	A key from another manufacturer similar to the advanced key is in the operation range.	Take the key from another manufacturer similar to the advanced key out of the operation range.
	Without the ignition switched off, the advanced key is taken out of the cabin, and then all the doors are closed.	Bring the advanced key back into the cabin.

Message Indicated on Display*

If a message is displayed in the center display (Type B audio), take appropriate action (in a calm manner) according to the displayed message.

(Display example)

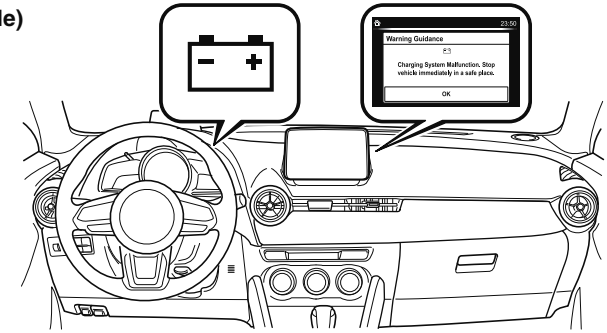

▼ Stop Vehicle in Safe Place Immediately

If the following messages are displayed in the center display (Type B audio), a vehicle system may be malfunctioning. Stop the vehicle in a safe place and contact an Authorized Mazda Dealer.

Display	Indicated Condition
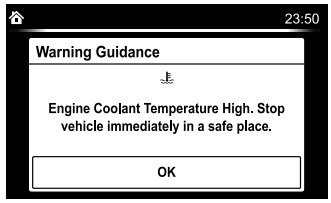	Displays if the engine coolant temperature has increased excessively.
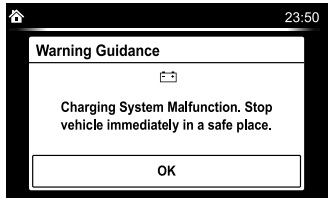	Displays if the charging system has a malfunction.

*Some models.

Warning/Indicator Lights and Warning Sounds

▼ Verify Display Content

Displays in the following cases:

Display	Indicated Condition/Action to be taken
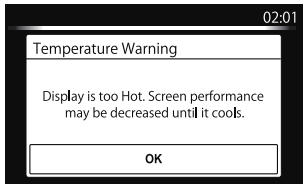	The following message is displayed when the temperature around the center display is high. Lowering the temperature in the cabin or the temperature around the center display by avoiding direct sunlight is recommended.

Warning Sound is Activated

▼ Lights-On Reminder

The lights-on reminder is operable when the time setting*1 of the auto headlight off function is off.
If lights are on and the ignition is switched to ACC or off, a continuous beep sound will be heard when the driver's door is opened.

*1 If the light switch is left on, the auto headlight off function automatically turns off the lights about 30 seconds after switching the ignition off. The time setting can be changed.
Refer to Personalization Features on page 9-9.

NOTE

- *When the ignition is switched to ACC, the "Ignition Not Switched Off (STOP) Warning Beep" (page 7-44) overrides the lights-on reminder.*
- *A personalized function is available to change the sound volume for the lights-on reminder.*
  Refer to Personalization Features on page 9-9.

▼ Air Bag/Front Seat Belt Pretensioner System Warning Beep

If there is a problem with the air bag/seat belt pretensioner systems and the warning light illumination, a warning beep sound will be heard for about 5 seconds every minute.

The air bag and seat belt pretensioner system warning beep sound will continue to be heard for approximately 35 minutes. Have your vehicle inspected at an Authorized Mazda Dealer as soon as possible.

⚠ WARNING

Do not drive the vehicle with the air bag/seat belt pretensioner system warning beep sounding:
Driving the vehicle with the air bag/seat belt pretensioner system warning beep sounding is dangerous. In a collision, the air bags and the seat belt pretensioner system will not deploy and this could result in death or serious injury. Contact an Authorized Mazda Dealer to have the vehicle inspected as soon as possible.

▼ Seat Belt Warning Beep

Except Mexico

If the driver's seat belt is not fastened when the ignition is switched ON, a beep sound will be heard for about 6 seconds. If the driver or the front passenger's seat belt is not fastened and the vehicle is driven at a speed faster than about 20 km/h (12 mph), a beep sound will be heard again for a specified period of time.
Until a seat belt is fastened or a given period of time has elapsed, the beep sound will not stop even if the vehicle speed falls below 20 km/h (12 mph).

NOTE

- *To allow the front passenger occupant classification sensor to function properly, do not place and sit on an additional seat cushion on the front passenger's seat. The sensor may not function properly because the additional seat cushion could cause sensor interference.*
- *If a small child is seated on the front passenger's seat, the warning beep may not operate.*

Mexico

If the vehicle speed exceeds about 20 km/h (12 mph) with the driver or front passenger's seat belt unfastened, a warning beep sounds continuously. If the seat belt remains unfastened, the beep sound stops once and then continues for about 90 seconds. The beep stops after the driver or front passenger's seat belt is fastened. Until a seat belt is fastened or a given period of time has elapsed, the beep sound will not stop even if the vehicle speed falls below 20 km/h (12 mph).

NOTE

- *Placing heavy items on the front passenger's seat may cause the front passenger's seat belt warning function to operate depending on the weight of the item.*
- *To allow the front passenger seat weight sensor to function properly, do not place and sit on an additional seat cushion on the front passenger's seat. The sensor may not function properly because the additional seat cushion could cause sensor interference.*
- *If a small child is seated on the front passenger's seat, the warning beep may not operate.*

▼ Ignition Not Switched Off (STOP) Warning Beep

If the driver's door is opened with the ignition switched to ACC, a beep will be heard continuously in the cabin to notify the driver that the ignition has not been switched OFF (STOP). Under this condition, the keyless entry system will not operate, the vehicle cannot be locked, and the battery voltage will be depleted.

▼ Key Removed from Vehicle Warning Beep

Vehicles with advanced keyless function

If the key is taken out of the vehicle while the ignition is not switched OFF and all the doors are closed, the beep which sounds outside of the vehicle will be heard 6 times, the beep which sounds inside the vehicle will be heard 6 times, and the KEY warning light (red) in the instrument cluster flashes continuously to notify the driver that the ignition has not been switched OFF.

Vehicles without advanced keyless function

If the key is taken out of the vehicle while the ignition is not switched OFF and all the doors are closed, a beep will be heard in the cabin 6 times and the KEY warning light (red) in the instrument cluster turns on continuously to notify the driver that the ignition has not been switched OFF.

NOTE
Because the key utilizes low-intensity radio waves, the Key Removed From Vehicle Warning may activate if the key is carried together with a metal object or it is placed in a poor signal reception area.

▼ Request Switch Inoperable Warning Beep (With the advanced keyless function)

If the request switch is pressed with the door open or ajar, or the ignition is not switched OFF with a key being carried, a beep will be heard outside for about 2 seconds to notify the driver that the door or liftgate cannot be locked.

▼ Key Left-in-luggage Compartment Warning Beep (With the advanced keyless function)

If the key is left in the luggage compartment with all the doors locked and the liftgate closed, a beep will be heard outside for about 10 seconds to notify the driver that the key is in the luggage compartment. In this case, take out the key by pressing the electric liftgate opener and opening the liftgate. The key taken out of the luggage compartment may not operate because its functions have been temporarily stopped. To restore the key's functions, perform the applicable procedure (page 3-8).

▼ Key Left-in-vehicle Warning Beep (With the advanced keyless function)

If all the doors and luggage compartment are locked using another key while the key is left in the cabin, the beep which sounds outside of the vehicle will be heard for about 10 seconds to notify the driver that the key is in the cabin. In this case, take out the key by opening the door. A key taken out of the vehicle using this method may not operate because its functions have been temporarily stopped. To restore the key's functions, perform the applicable procedure (page 3-8).

▼ Electric Parking Brake (EPB) Warning Beep

The warning buzzer is activated under the following conditions:

- The vehicle is driven with the parking brake applied.
- The Electric Parking Brake (EPB) switch is pulled while the vehicle is driven.

▼ AUTOHOLD Warning Beep

Warning light flashes and beep sound is activated simultaneously for about five seconds when using AUTOHOLD function or when AUTOHOLD switch is operated.
Because a problem with AUTOHOLD function has occurred, AUTOHOLD function does not operate even if AUTOHOLD switch is operated.

If the warning light flashes and the beep sound is activated simultaneously, have your vehicle inspected at an Authorized Mazda Dealer.

▼ Tire Inflation Pressure Warning Beep*

The warning beep sound will be heard for about 3 seconds if the tire pressures decrease.
Refer to Tire Pressure Monitoring System on page 4-144.

▼ Power Steering Warning Buzzer

If the power steering system has a malfunction, the power steering malfunction light turns on or flashes and the buzzer operates at the same time.
Refer to Stop Vehicle in Safe Place Immediately on page 7-27.

▼ Blind Spot Monitoring (BSM) Warning Beep*

Driving forward

The warning beep operates when the turn signal lever is operated to the side where the Blind Spot Monitoring (BSM) warning light is illuminated.

NOTE
A personalized function is available to change the Blind Spot Monitoring (BSM) warning beep sound volume.
Refer to Personalization Features on page 9-9.

Reversing

The Blind Spot Monitoring (BSM) warning sound is activated if there is a possibility of collision with a vehicle approaching from behind and from the rear on the left and right sides of the vehicle.

▼ Lane Departure Warning Sound*

While the system is operating, if the system determines that the vehicle may depart from the lane, it sounds a warning sound.

NOTE

- *The volume of the LDWS warning sound can be changed.*
  Refer to Personalization Features on page 9-9.
- *The type of the LDWS warning sound can be changed.*
  Refer to Personalization Features on page 9-9.

 *Some models.

▼ Mazda Radar Cruise Control with Stop & Go function (MRCC with Stop & Go function) System Warnings*

The Mazda Radar Cruise Control with Stop & Go function (MRCC with Stop & Go function) system warnings notify the driver of system malfunctions and cautions on use when required.
Check based on the beep sound.

Cautions	What to check
The beep sounds 1 time while the Mazda Radar Cruise Control with Stop & Go function (MRCC with Stop & Go function) is operating	The Mazda Radar Cruise Control with Stop & Go function (MRCC with Stop & Go function) system has been canceled.
The beep continues to sound while the vehicle is being driven.	The distance between your vehicle and the vehicle ahead is too close. Verify the safety of the surrounding area and reduce vehicle speed.
When the Mazda Radar Cruise Control with Stop & Go function (MRCC with Stop & Go function) is operating, the beep sounds and the Mazda Radar Cruise Control with Stop & Go function (MRCC with Stop & Go function) warning light (amber) in the instrument cluster turns on.	A malfunction in the system may be indicated. Have your vehicle inspected at an Authorized Mazda Dealer.

▼ Excessive Speed Warning*

If the vehicle speed exceeds the speed limit sign displayed on the active driving display, the warning sound is activated and the area around the speed limit sign displayed on the active driving display flashes 3 times in amber, and if the vehicle speed continues to exceed the displayed speed limit sign, the indication stops flashing and remains on.

▼ Collision warning*

If there is a possibility of a collision with a vehicle ahead, a warning sound is activated intermittently at the same time as the warning light flashes and the warning indication is displayed in the active driving display (With active driving display).

*Some models.

When Liftgate Cannot be Opened

If the vehicle battery is dead, the liftgate cannot be unlocked and opened.
In this case, the liftgate can be unlocked by taking care of the dead battery situation.
Refer to Jump-Starting on page 7-18.
If the liftgate cannot be unlocked even if the dead battery situation has been resolved, the electrical system may have a malfunction.
In this case, the liftgate can be opened using the following procedure as an emergency measure.

1. Fold down the rear seatbacks.
   Refer to Split Folding the Seatbacks on page 2-9.
2. Remove cover on the interior surface of the liftgate using a flathead screwdriver.

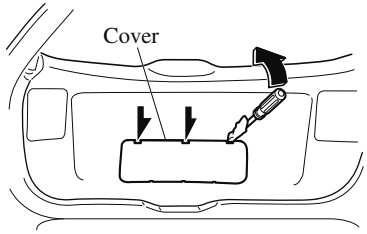

3. Using a flathead screwdriver, open the inner cover.

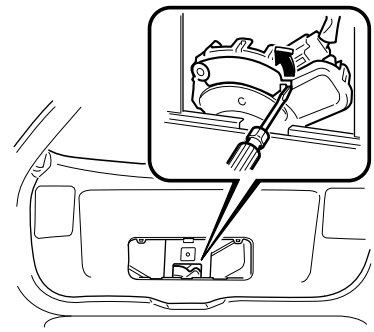

4. Using a flathead screwdriver, turn the lever to the right to unlock the liftgate.

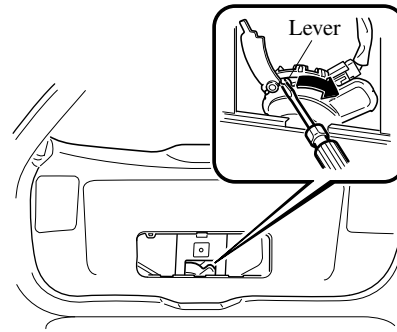

After performing this emergency measure, have the vehicle inspected at an Authorized Mazda Dealer as soon as possible.

If the Active Driving Display Does Not Operate

If the active driving display does not operate, switch the ignition off and then restart the engine. If the active driving display does not operate even with the engine restarted, have the vehicle inspected at an Authorized Mazda Dealer.

MEMO

8 Customer Information and Reporting Safety Defects

Important consumer information including warranties and add-on equipment.

Customer Assistance..... 8-2
Customer Assistance (U.S.A.)..... 8-2
Customer Assistance (Canada)..... 8-7
Customer Assistance (Puerto Rico)..... 8-10
Customer Assistance (Mexico)..... 8-11

Mazda Importer/Distributors..... 8-13
Importer/Distributor..... 8-13

Reporting Safety Defects..... 8-14
Reporting Safety Defects (U.S.A.)..... 8-14
Reporting Safety Defects (Canada)..... 8-15

Warranty.....8-16
Warranties for Your Mazda.....8-16
Outside the United States/ Canada..... 8-17
Registering Your Vehicle in A Foreign Country (Except United States and Canada)..... 8-18
Add-On Non-Genuine Parts and Accessories.....8-19

Cell Phones.....8-20
Cell Phones Warning..... 8-20

Event Data Recorder.....8-21
Event Data Recorder (U.S.A. and Canada).....8-21

Recording of Vehicle Data..... 8-22
Recording of Vehicle Data.....8-22

Uniform Tire Quality Grading System (UTQGS)..... 8-23
Uniform Tire Quality Grading System (UTQGS)..... 8-23

Tire Information (U.S.A.)..... 8-25
Tire Labeling..... 8-25
Location of the Tire Label (Placard)..... 8-30
Tire Maintenance.....8-33
Vehicle Loading.....8-36
Steps for Determining the Correct Load Limit.....8-42

Declaration of Conformity.....8-43
Declaration of Conformity..... 8-43

Customer Assistance (U.S.A.)

Your complete and permanent satisfaction is our business. We are here to serve you. All Authorized Mazda Dealers have the knowledge and the tools to keep your Mazda vehicle in top condition.
If you have any questions or recommendations for improvement regarding the service of your Mazda vehicle or servicing by Mazda Dealer personnel, we recommend that you take the following steps:

NOTE
If it becomes necessary to have the components or wiring system for the supplementary restraint system modified to accommodate a person with certain medical conditions in accordance with a certified physician, contact an Authorized Mazda Dealer. For more information, go to NHTSA website www.safercar.gov (VEHICLE SHOPPERS > Air Bags > Air Bag FAQs > Air Bag Deactivation).

▼ STEP 1: Contact Your Mazda Dealer

Discuss the matter with an Authorized Mazda Dealer. This is the quickest and best way to address the issue.

- If your concern has not been resolved by the CUSTOMER RELATIONS, SALES, SERVICE, or PARTS MANAGER, then please contact the GENERAL MANAGER of the dealership or the OWNER.
- If it becomes necessary to have the components or wiring system for the supplementary restraint system modified to accommodate a person with certain medical conditions in accordance with a certified physician, go to STEP 2.

▼ STEP 2: Contact Mazda North American Operations

If for any reason you feel the need for further assistance after contacting your dealership management or it becomes necessary to have the components or wiring system for the supplementary restraint system modified to accommodate a person with certain medical conditions in accordance with a certified physician, you can reach Mazda North American Operations by one of the following ways.

Log on: at www.MazdaUSA.com

Answers to many questions, including how to locate or contact a local Mazda dealership in the U.S., can be found here.

E-mail: click on “Contact Us” located on the bottom of the page at www.mazdausa.com under “Help”

By phone at: 1 (800) 222-5500

By letter at:
ATTN: Customer Experience Center
Mazda North American Operations
200 Spectrum Center Drive Suite 100
Irvine, California 92618
P.O. Box 19734
Irvine, CA 92623-9734

In order to serve you efficiently and effectively, please help us by providing the following information:
1. Your name, address, and telephone number
2. Year and model of vehicle
3. Vehicle Identification Number (17 digits, noted on your registration or title or located on the upper driver's side corner of the dash)
4. Purchase date and current mileage
5. Your dealer's name and location
6. Your question(s)

If you live outside the U.S.A., please contact your nearest Mazda Distributor.

▼ STEP 3: Contact Better Business Bureau (BBB)

Mazda North American Operations realizes that mutual agreement on some issues may not be possible. As a final step to ensure that your concerns are being fairly considered, Mazda North American Operations has agreed to participate in a dispute settlement program administered by the Better Business Bureau (BBB) system, at no cost to you the consumer.

BBB AUTO LINE works with consumers and the manufacturer in an attempt to reach a mutually acceptable resolution of any warranty related concerns. If the BBB is not able to facilitate a settlement they will provide an informal hearing before an arbitrator.

You are required to resort to BBB AUTO LINE before exercising rights or seeking remedies under the Federal Magnuson-Moss Warranty Act, 15 U.S.C. § 2301 et seq. To the extent permitted by the applicable state “Lemon Law”, you are also required to resort to BBB AUTO LINE before exercising any rights or seeking remedies under the “Lemon Law”. If you choose to seek remedies that are not created by the Magnuson-Moss Warranty Act or the applicable state “Lemon Law”, you are not required to first use BBB AUTO LINE.

The whole process normally takes 40 days or less. The arbitration decision is not binding on you or Mazda unless you accept the decision. For more information about BBB AUTO LINE, including current eligibility standards, please call 1-800-955-5100 or visit the BBB website at www.bbb.org/autoline.

Being truly committed to customer satisfaction is more than a phrase with Mazda. We hope to satisfy every customer directly, but if there is ever a question about our decision, Mazda believes in providing a fast, fair and free method such as the BBB AUTO LINE to ensure Mazda delivers on our commitment to do the right thing for our customers!

▼ California Customers

1. Mazda North American Operations participates in BBB AUTO LINE, a mediation/arbitration program administered by the Council of Better Business Bureaus [4200 Wilson Boulevard, Arlington, Virginia 22203] through local Better Business Bureaus. BBB AUTO LINE and Mazda have been certified by the Arbitration Certification Program of the California Department of Consumer Affairs.
2. If you have a problem arising under a Mazda written warranty, we encourage you to bring it to our attention. If we are unable to resolve it, you may file a claim with BBB AUTO LINE. Claims must be filed with BBB AUTO LINE within six (6) months after the expiration of the warranty.
3. To file a claim with BBB AUTO LINE, call 1-800-955-5100. There is no charge for the call.
4. In order to file a claim with BBB AUTO LINE, you will have to provide your name and address, the brand name and vehicle identification number (VIN) of your vehicle, and a statement of the nature of your problem or complaint. You will also be asked to provide: the approximate date of your acquisition of the vehicle, the vehicle's current mileage, the approximate date and mileage at the time any problem(s) were first brought to the attention of Mazda or one of our dealers, and a statement of the relief you are seeking.
5. BBB AUTO LINE staff may try to help resolve your dispute through mediation. If mediation is not successful, or if you do not wish to participate in mediation, claims within the program's jurisdiction may be presented to an arbitrator at an informal hearing. The arbitrator's decision should ordinarily be issued within 40 days from the time your complaint is filed; there may be a delay of 7 days if you did not first contact Mazda about your problem, or a delay of up to 30 days if the arbitrator requests an inspection/report by an impartial technical expert or further investigation and report by BBB AUTO LINE.
6. You are required to use BBB AUTO LINE before asserting in court any rights or remedies conferred by California Civil Code Section 1793.22. You are also required to use BBB AUTO LINE before exercising rights or seeking remedies created by Title I of the Magnuson-Moss Warranty Act, 15 U.S.C. sec. 2301 et seq. If you choose to seek redress by pursuing rights and remedies not created by California Civil Code Section 1793.22 or Title I of the Magnuson-Moss Warranty Act, resort to BBB AUTO LINE is not required by those statutes.
7. California Civil Code Section 1793.2 (d) requires that, if Mazda or its representative is unable to repair a new motor vehicle to conform to the vehicle's applicable express warranty after a reasonable number of attempts, Mazda may be required to replace or repurchase the vehicle. California Civil Code Section 1793.22 (b) creates a presumption that Mazda has had a reasonable number of attempts to conform the vehicle to its applicable express warranties if, within 18 months from delivery to the buyer or 18,000 miles on the vehicle's odometer, whichever occurs first, one or more of the following occurs:

- The same nonconformity [a failure to conform to the written warranty that substantially impairs the use, value or safety of the vehicle] results in a condition that is likely to cause death or serious bodily injury if the vehicle is driven **AND** the nonconformity has been subject to repair two or more times by Mazda or its agents **AND** the buyer or lessee has directly notified Mazda of the need for the repair of the nonconformity; OR
- The same nonconformity has been subject to repair 4 or more times by Mazda or its agents **AND** the buyer has notified Mazda of the need for the repair of the nonconformity; OR
- The vehicle is out of service by reason of repair of nonconformities by Mazda or its agents for a cumulative total of more than 30 calendar days after delivery of the vehicle to the buyer.

NOTICE TO Mazda AS REQUIRED ABOVE SHALL BE SENT TO THE FOLLOWING ADDRESS:
Mazda North American Operations
200 Spectrum Center Drive Suite 100
Irvine, California 92618
ATTN: Customer Mediation

8. The following remedies may be sought in BBB AUTO LINE: repairs, reimbursement for money paid to repair a vehicle or other expenses incurred as result of a vehicle nonconformity, repurchase or replacement of your vehicle, and compensation for damages and remedies available under Mazda's written warranty or applicable law.
9. The following remedies may **not** be sought in BBB AUTO LINE: punitive or multiple damages, attorneys' fees, or consequential damages other than as provided in California Civil Code Section 1794 (a) and (b).
10. You may reject the decision issued by a BBB AUTO LINE arbitrator. If you reject the decision, you will be free to pursue further legal action. The arbitrator's decision and any findings will be admissible in a court action.
11. If you accept the arbitrator's decision, Mazda will be bound by the decision, and will comply with the decision within a reasonable time not to exceed 30 days after we receive notice of your acceptance of the decision.
12. Please call BBB AUTO LINE at 1-800-955-5100 for further details about the program.

Customer Assistance (Canada)

▼ Satisfaction Review Process

Your complete and permanent satisfaction is of primary concern to Mazda. All Authorized Mazda Dealers have both the knowledge and tools to keep your Mazda in top condition. In our experience, any questions, problems, or complaints regarding the operation of your Mazda or any other general service transactions are most effectively resolved by your dealer. If the cause of your dissatisfaction cannot adequately be addressed by normal dealership procedures, we recommend that you take the following steps:

▼ STEP 1: Contact the Mazda Dealer

Discuss the matter with a member of dealership management. If the Service Manager has already reviewed your concerns, contact the owner of the dealership or its General Manager.

▼ STEP 2: Contact the Mazda Regional Office

If you feel that you still require assistance, ask the dealer Service Manager to arrange for you to meet the local Mazda Service Representative. If more expedient, contact Mazda Canada Inc. Regional Office nearest you for such arrangements. Regional Office address and phone numbers are shown (page 8-9).

▼ STEP 3: Contact the Mazda Customer Relations Department

If still not substantially satisfied, contact the Customer Relations Department, Mazda Canada Inc., 55 Vogell Road, Richmond Hill, Ontario, L4B 3K5 Canada TEL: 1 (800) 263-4680.
Provide the Department with the following information:

1. Your name, address and telephone number
2. Year and model of vehicle
3. Vehicle Identification Number (VIN). Refer to the Vehicle Identification Number on page 9-2 for the location of the VIN.
4. Purchase date
5. Present odometer reading
6. Your dealer's name and location
7. The nature of your problem and/or cause of dissatisfaction

The Department, in cooperation with the local Mazda Service Representative, will review the case to determine if everything possible has been done to ensure your satisfaction.

Please recognize that the resolution of service problems in most cases requires the use of your Mazda dealer's service facilities, personnel and equipment. We urge you to follow the above three steps in sequence for most effective results.

▼ Mediation/Arbitration Program

Occasionally a customer concern cannot be resolved through Mazda's Customer Satisfaction Program. If after exhausting the procedures in this manual your concern is still not resolved, you have another option.

Mazda Canada Inc. participates in an arbitration program administered by the Canadian Motor Vehicle Arbitration Plan (CAMVAP). CAMVAP will advise you about how your concern may be reviewed and resolved by an independent third party through binding arbitration.

Your complete satisfaction is the goal of Mazda Canada Inc. and our dealers.
Mazda's participation in CAMVAP makes a valuable contribution to our achieving that goal. There is no charge for using CAMVAP. CAMVAP results are fast, fair and final as the award is binding on both you and Mazda Canada Inc.

▼ Canadian Motor Vehicle Arbitration Plan (CAMVAP)

If a specific item of concern arises, where a solution cannot be reached between an owner, Mazda, and/or one of its dealers (that all parties cannot agree upon), the owner may wish to use the services offered by the Canadian Motor Vehicle Arbitration Plan (CAMVAP).

CAMVAP uses the services of Provincial Administrators to assist consumers in scheduling and preparing for their arbitration hearings. However, before you can proceed with CAMVAP you must follow your Mazda dispute resolution process as outlined previously.

CAMVAP is fully implemented in all provinces and territories.
Consumers wishing to obtain further information about the Program should contact the Provincial Administrator at 1 (800) 207-0685, or by contacting the Canadian Motor Vehicle Arbitration Plan Office at:

Canadian Motor Vehicle Arbitration Plan
235 Yorkland Boulevard, suite 300
North York, Ontario
M2J 4Y8
http://camvap.ca
Provincial Administrators may be reached locally:

Province/Territory	CAMVAP Number
British Columbia & Yukon Territories	1 (800) 207-0685
Alberta & Northwest Territories	1 (800) 207-0685
Saskatchewan	1 (800) 207-0685
Manitoba	1 (800) 207-0685

Province/Territory	CAMVAP Number
Ontario	1 (800) 207-0685
Atlantic Canada	1 (800) 207-0685
Quebec	1 (800) 207-0685

▼ Regional Offices

REGIONAL OFFICES	COVERING AREAS
MAZDA CANADA INC. WESTERN REGION 5011 275 STREET LANGLEY, BRITISH COLUMBIA V4W 0A8 (778) 369-2100 1 (800) 663-0908	ALBERTA, BRITISH COLUMBIA, MANITOBA, SASKATCHEWAN, YUKON
MAZDA CANADA INC. CENTRAL REGION 55 VOGELL ROAD, RICHMOND HILL, ONTARIO, L4B 3K5 1 (800) 263-4680	ONTARIO, NEW BRUNSWICK, NOVA SCOTIA, PRINCE EDWARD ISLAND, NEWFOUNDLAND
MAZDA CANADA INC. QUEBEC REGION 6111 ROUTE TRANSCANADIENNE POINTE CLAIRE, QUEBEC H9R 5A5 (514) 694-6390	QUEBEC

Customer Assistance (Puerto Rico)

Your complete and permanent satisfaction is our business. That is why all Authorized Mazda Dealers have the knowledge and the tools to keep your Mazda vehicle in top condition.
If you have any questions or recommendations for improvement regarding the service of your Mazda vehicle or servicing by Mazda Dealer personnel, we recommend that you take the following steps:

▼ STEP 1

Discuss the matter with an Authorized Mazda Dealer. This is the quickest and best way to address the issue. If your concern has not been resolved by the CUSTOMER RELATIONS, SALES, SERVICE, or PARTS MANAGER, then please contact the GENERAL MANAGER of the dealership or the OWNER.

▼ STEP 2

If, after following STEP 1, you feel the need for further assistance, please contact your area's Mazda representative.
Refer to Importer/Distributor on page 8-13.

Please help us by providing the following information:

1. Your name, address, and telephone number
2. Year and model of vehicle
3. Vehicle Identification Number (17 digits, noted on your registration or title or located on the upper driver's side corner of the dash)
4. Purchase date and current mileage
5. Your dealer's name and location
6. Your question(s)

Customer Assistance (Mexico)

Your complete and permanent satisfaction is our business. We are here to serve you. All Authorized Mazda Dealers have the knowledge and the tools to keep your Mazda vehicle in top condition.
If you have any questions or recommendations for improvement regarding the service of your Mazda vehicle or servicing by Mazda Dealer personnel, we recommend that you take the following steps:

▼ Contact Your Mazda Dealer

Discuss the matter with an Authorized Mazda Dealer. This is the quickest and best way to address the issue.

- If your concern has not been resolved by the CUSTOMER RELATIONS, SALES, SERVICE, or PARTS MANAGER, then please contact the GENERAL MANAGER of the dealership or the OWNER.
- If it becomes necessary to have the components or wiring system for the supplementary restraint system modified to accommodate a person with certain medical condition in accordance with a certified physician you must contact your dealership in order to avoid the potential loss of the warranty of your vehicle which may occur if some third party is hired by the customer to make any modifications to this system.

Log on: at www.mazdamexico.com.mx

Answers to many questions, including how to locate or contact a local Mazda dealership in Mexico, can be found here.

E-mail: click on “Contactanos” at the top of the page at www.mazdamexico.com.mx

By phone at: 01 800 01 MAZDA (62932)

By letter at:
Attn: Customer Assistance
Mazda Motor de Mexico
Mario Pani #150, PB Col. Lomas de Santa Fe
Mexico, D.F. C.P. 05300
Del. Cuajimalpa de Morelos
Tel: Customer Assistance
01 800 01 MAZDA(62932).

Customer Assistance

In order to serve you efficiently and effectively, please help us by providing the following information:

1. Your name, address, and telephone number
2. Year and model of vehicle
3. Vehicle Identification Number (17 digits, noted on your registration or title or located on the upper driver's side corner of the dash)
4. Purchase date and current mileage
5. Your dealer's name and location
6. Your question(s)

Importer/Distributor

▼ U.S.A.

Mazda North American Operations
200 Spectrum Center Drive Suite 100
Irvine, California 92618
P.O. Box 19734
Irvine, CA 92623-9734 U.S.A.
TEL: 1 (800) 222-5500 (in U.S.A.)
(949) 727-1990 (outside U.S.A.)

▼ CANADA

Mazda Canada Inc.
55 Vogell Road, Richmond Hill,
Ontario, L4B 3K5 Canada
TEL: 1 (800) 263-4680 (in Canada)
(905) 787-7000 (outside Canada)

▼ PUERTO RICO/U.S. Virgin Island

International Automotive Distributor Group, LLC. (Mazda de Puerto Rico)
P.O. Box 191850, San Juan, Puerto Rico
00919-1850
TEL: (787) 641-1777

▼ MEXICO

Mazda Motor de Mexico
Mario Pani # 150, PB Col. Lomas de
Santa Fe Mexico, D.F. C.P. 05300 Del.
Cuajimalpa
TEL: Center of Attention to Clients:
01 (800) 016 2932. in Mexico

▼ GUAM

Triple J Motors
157 South Marine Drive, Tamuning,
GUAM 96911 USA
P.O. Box 6066 Tamuning, Guam 96931
TEL: (671) 649-6555

▼ SAIPAN

Pacific International Marianas, Inc.
(d.b.a. Midway Motors)
P.O. Box 887 Saipan, MP 96950
TEL: (670) 234-7524

Triple J Saipan, Inc.
(d.b.a. Triple J Motors)
P.O. Box 500487 Saipan, MP 96950-0487
TEL: (670) 234-7133/3051

▼ AMERICAN SAMOA

Polynesia Motors, Inc.
P.O. Box 1120, Pago Pago, American
Samoa 96799
TEL: (684) 699-9347

Reporting Safety Defects (U.S.A.)

If you believe that your vehicle has a defect which could cause a crash or could cause injury or death, you should immediately inform the National Highway Traffic Safety Administration (NHTSA) in addition to notifying Mazda Motor Corporation (Your Mazda Importer/Distributor).

If NHTSA receives similar complaints, it may open an investigation, and if it finds that a safety defect exists in a group of vehicles, it may order a recall and remedy campaign. However, NHTSA cannot become involved in individual problems between you, your dealer, or Mazda Motor Corporation (Your Mazda Importer/Distributor).

To contact NHTSA, you may call the Vehicle Safety Hotline toll-free at 1-888-327-4236 (TTY:1-800-424-9153); go to http://www.safercar.gov; or write to: Administrator, NHTSA, 1200 New Jersey Avenue, SE., Washington, DC, 20590. You can also obtain other information about motor vehicle safety from http://www.safercar.gov.

NOTE
If you live in the U.S.A., all correspondence to Mazda Motor Corporation should be forwarded to:

Mazda North American Operations
200 Spectrum Center Drive Suite 100
Irvine, California 92618
or
P.O. Box 19734
Irvine, CA 92623-9734
Customer Experience Center or toll free at 1 (800) 222-5500

If you live outside of the U.S.A., please contact the nearest Mazda Distributor shown (page 8-13) in this manual.

Reporting Safety Defects (Canada)

Canadian customers who wish to report a safety-related defect to Transport Canada, Defect Investigations and Recalls, may telephone the toll free hotline 1-800-333-0510, or contact Transport Canada by mail at: Transport Canada, ASFAD, Place de Ville Tower C, 330 Sparks Street, Ottawa ON K1A 0N5.

For additional road safety information, please visit the Road Safety website at: http://www.tc.gc.ca/roadsafety/menu.htm

Warranties for Your Mazda

- New Vehicle Limited Warranty
- Powertrain Limited Warranty
- Safety Restraint System Limited Warranty
- Anti-perforation Limited Warranty
- Federal Emission Control Warranty/California Emission Control Warranty
  - Emission Defect Warranty
  - Emission Performance Warranty
- Emission Control Warranty
- Replacement Parts and Accessories Limited Warranty
- Tire Warranty

NOTE
Warranty information varies depending on the country. Refer to the Warranty Booklet for detailed warranty information.

Outside the United States/Canada

Government regulations in the United States/Canada require that automobiles meet specific emission regulations and safety standards. Therefore, vehicles built for use in the United States/Canada may differ from those sold in other countries.

The differences may make it difficult or even impossible for your vehicle to receive satisfactory servicing in other countries. We strongly recommend that you NOT take your Mazda outside the United States/Canada.

United States
However, in the event that you are moving to Canada permanently, Mazda vehicles built for use in the United States could be eligible for exportation to Canada with specific vehicle modifications to comply with the Canadian Motor Vehicle Safety Standards (CMVSS).

Canada
However, in the event that you are moving to the United States permanently, Mazda vehicles built for use in Canada could be eligible for exportation to the United States with specific vehicle modifications to comply with the United States Federal Motor Vehicle Safety Standards (FMVSS).

NOTE
The above is applicable for a permanent import/export situation and not related to travelers on vacation.

You may have the following problems if you do take your vehicle outside of the United States/Canada:

- Recommended fuel may be unavailable. Any kind of leaded fuel or low-octane fuel will affect vehicle performance and damage the emission controls and engine.
- Proper repair facilities, tools, testing equipment, and replacement parts may not be available.

Please refer to your Manufacturer's Warranty Booklet for more information.

Registering Your Vehicle in A Foreign Country (Except United States and Canada)

Registering your vehicle in a foreign country may be problematic depending on whether it meets the specific emission and safety standards of the country in which the vehicle will be driven. Consequently, your vehicle may require modifications at personal expense in order to meet the regulations.
In addition, you should be aware of the following issues:
Satisfactory vehicle servicing may be difficult or impossible in another country.

The fuel specified for your vehicle may be unavailable.

Parts, servicing techniques, and tools necessary to maintain and repair your vehicle may be unavailable.

There might not be an Authorized Mazda Dealer in the country you plan to take your vehicle.

The Mazda warranty is valid only in certain countries.

Add-On Non-Genuine Parts and Accessories

Non-genuine parts and accessories for Mazda vehicles can be found in stores.
These may fit your vehicle, but they are not approved by Mazda for use with Mazda vehicles. When you install non-genuine parts or accessories, they could affect your vehicle's performance or safety systems; the Mazda warranty doesn't cover this. Before you install any non-genuine parts or accessories, consult an Authorized Mazda Dealer.

WARNING

Always consult an Authorized Mazda Dealer before you install non-genuine parts or accessories:
Improperly designed parts or accessories could seriously affect your vehicle's performance or safety systems. This could cause you to have an accident or increase your chances of injuries in an accident.

Be very careful in choosing and installing add-on electrical equipment, such as mobile telephones, two-way radios, stereo systems, and car alarm systems:
Incorrectly choosing or installing improper add-on equipment or choosing an improper installer is dangerous. Essential systems could be damaged, causing engine stalling, air-bag (SRS) activation, ABS/TCS/DSC inactivation, or a fire in the vehicle.

Mazda assumes no responsibility for death, injury, or expenses that may result from the installation of add-on non-genuine parts or accessories.

Cell Phones Warning

WARNING

Please comply with the legal regulations concerning the use of communication equipment in vehicles in your country:
Use of any electrical devices such as cell phones, computers, portable radios, vehicle navigation or other devices by the driver while the vehicle is moving is dangerous. Dialing a number on a cell phone while driving also ties-up the driver's hands. Use of these devices will cause the driver to be distracted and could lead to a serious accident. If a passenger is unable to use the device, pull off the right-of-way to a safe area before use. If use of a cell phone is necessary despite this warning, use a hands-free system to at least leave the hands free to drive the vehicle. Never use a cell phone or other electrical devices while the vehicle is moving and, instead, concentrate on the full-time job of driving.

Event Data Recorder (U.S.A. and Canada)

This vehicle is equipped with an event data recorder (EDR). The main purpose of an EDR is to record, in certain crash or near crash-like situations, such as an air bag deployment or hitting a road obstacle, data that will assist in understanding how a vehicle's systems performed. The EDR is designed to record data related to vehicle dynamics and safety systems for a short period of time, typically 30 seconds or less. The EDR in this vehicle is designed to record such data as:

- How various systems in your vehicle were operating;
- Whether or not the driver and passenger safety belts were buckled/fastened;
- How far (if at all) the driver was depressing the accelerator and/or brake pedal; and,
- How fast the vehicle was traveling.

These data can help provide a better understanding of the circumstances in which crashes and injuries occur.
NOTE:
EDR data are recorded by your vehicle only if a non-trivial crash or near crash-like situation occurs; no data are recorded by the EDR under normal driving conditions and no personal data (e.g., name, gender, age, and crash location) are recorded. However, other parties, such as law enforcement, could combine the EDR data with the type of personally identifying data routinely acquired during a crash investigation.
To read data recorded by an EDR, special equipment is required, and access to the vehicle or the EDR is needed. In addition to the vehicle manufacturer, other parties, such as law enforcement, that have the special equipment, can read the information if they have access to the vehicle or the EDR.

Mazda will not disclose any of the data recorded in an EDR to a third party unless:

- A written agreement from the vehicle owner or the lessee is obtained
- Officially requested by the police or other law enforcement authorities
- Used as a defense for Mazda in a lawsuit, claim, or arbitration
- Ordered by a judge or court

However, if necessary Mazda will:

- Use the data for research on Mazda vehicle performance, including safety.
- Disclose the data or the summarized data to a third party for research purposes without disclosing vehicle or owner identification information.

Recording of Vehicle Data

This vehicle is equipped with a computer which records the following main vehicle data related to vehicle controls, operation, and other driving conditions.

Recorded data

- Vehicle conditions such as engine speed and vehicle speed
- Driving operation conditions such as accelerator and brake pedals, and information related to the environmental circumstances while the vehicle is driven
- Malfunction diagnosis information from each on-vehicle computer
- Information related to controls of other on-vehicle computers

NOTE
The recorded data may vary depending on the vehicle grade and optional equipment. Voice and images are not recorded.

Data handling

Mazda and its subcontracting parties may obtain and use the recorded data for vehicle malfunction diagnosis, research and development, and quality improvement.
Mazda will not disclose or provide any of the obtained data to a third party unless:

- An agreement from the vehicle owner (agreements from lessor and lessee for leased vehicle) is obtained
- Officially requested by the police or other law enforcement authorities
- For statistical processing by a research institution after processing the data so that identification of the owner or the vehicle is impossible

Uniform Tire Quality Grading System (UTQGS)

This information relates to the tire grading system developed by the U.S. National Highway Traffic Safety Administration for grading tires by tread wear, traction, and temperature performance.

▼ Tread Wear

The tread wear grade is a comparative rating based on the wear rate of the tire when tested under controlled conditions on a specified government test course.
For example, a tire graded 150 would wear one-and-a-half times as well on the government course as a tire graded 100.

The relative performance of tires depends upon the actual conditions of their use, however, and may depart significantly from the norm because of variations in driving habits, service practices and differences in road characteristics and climate.

▼ Traction-AA, A, B, C

The traction grades, from highest to lowest, are AA, A, B, and C. These grades represent the tire's ability to stop on wet pavement as measured under controlled conditions on specified government test surfaces of asphalt and concrete. A tire marked C may have poor traction performance.

⚠ WARNING

The traction grade assigned to this tire is based on braking (straight ahead) traction tests and does not include acceleration cornering (turning), hydroplaning, or peak traction characteristics.

▼ Temperature-A, B, C

The temperature grades A (the highest), B, and C, represent the tire's resistance to the generation of heat and its ability to dissipate heat when tested under controlled conditions on a specified indoor laboratory test wheel.
Sustained high temperature can cause the material of the tire to degenerate and reduce tire life, and excessive temperatures can lead to sudden tire failure.

Grade C corresponds to a level of performance which all passenger vehicle tires must meet under the Federal Motor Vehicle Safety Standard No. 109. Grades B and A represent higher levels of performance on the laboratory test wheel than the minimum required by law.

Uniform Tire Quality Grading System (UTQGS)

WARNING

Keep your vehicle's tires properly inflated and not overloaded:
Driving with improperly inflated or overloaded tires is dangerous. Excessive speed, underinflation, or excessive loading, either separately or in combination, can cause heat buildup and possible tire failure. The temperature grade for this tire is established for a tire that is properly inflated and not overloaded.

These grades will be added to the sidewalls of passenger vehicle tires over the next several years according to a schedule established by the NHTSA and the tire manufacturers.

The grade of tires available as standard or optional equipment on Mazda vehicles may vary with respect to grade.

ALL PASSENGER VEHICLE TIRES MUST CONFORM TO THESE GRADES AND TO ALL OTHER FEDERAL TIRE-SAFETY REQUIREMENTS.

▼ UNIFORM TIRE QUALITY GRADING

Quality grades can be found where applicable on the tire sidewall between tread shoulder and maximum section width.
For example:
TREADWEAR 200 TRACTION AA TEMPERATURE A

UTQGS MARK (example)

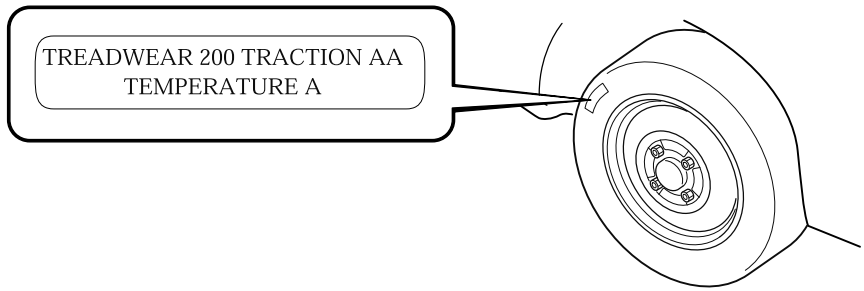

Tire Labeling

Federal law requires tire manufacturers to place standardized information on the sidewall of all tires. This information identifies and describes the fundamental characteristics of the tire and also provides a tire identification number for safety standard certification and in case of a recall.

▼ Information on Passenger Vehicle Tires

Please refer to the sample below.

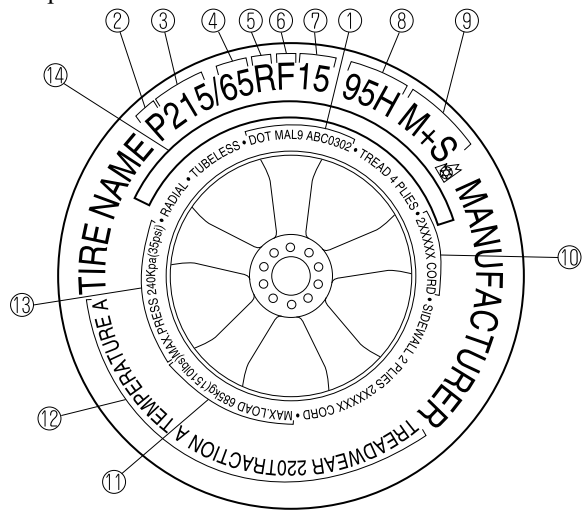

1. TIN: U.S. DOT tire identification number
2. Passenger car tire
3. Nominal width of tire in millimeters
4. Ratio of height to width (aspect ratio)
5. Radial
6. Run-flat tire
7. Rim diameter code
8. Load index & speed symbol
9. Severe snow conditions
10. Tire ply composition and materials used
11. Max. load rating
12. Tread wear, traction and temperature grades
13. Max. permissible inflation pressure
14. SAFETY WARNING

Tire Information (U.S.A.)

P215/65R15 95H is an example of a tire size and load index rating. Here is an explanation of the various components of that tire size and load index rating. Note that the tire size and load index rating may be different from the example.

P

Indicates a tire that may be installed on cars, SUVs, minivans and light trucks as designated by the Tire and Rim Association (T&RA).

NOTE
If your tire size does not begin with a letter this may mean it is designated by either ETRTO (European Tire and Rim Technical Organization) or JATMA (Japan Tire Manufacturing Association).

215

“215” is the nominal width of the tire in millimeters. This three-digit number gives the width in millimeters of the tire from sidewall edge to sidewall edge. In general, the larger the number, the wider the tire.

65

“65” is the aspect ratio. This two-digit number indicates the tire's ratio of height to width.

R

“R” is the tire construction symbol. R indicates “Radial ply construction”.

15

“15” is the wheel rim diameter in inches.

95

“95” is the Load Index. This two-or three-digit number indicates how much weight each tire can support.

H

“H” is the speed rating. The speed rating denotes the maximum speed for which the use of the tire is rated.

Letter Rating	Speed Rating
Q	99 mph
R	106 mph
S	112 mph
T	118 mph
U	124 mph
H	130 mph

Letter Rating	Speed Rating
V	149 mph
W	168* mph
Y	186* mph

* For tires with a maximum speed capability over 149 mph, tire manufacturers sometimes use the letters ZR. For tires with a maximum speed capability over 186 mph, tire manufacturers always use the letters ZR.

M+S or M/S: Mud and Snow

AT: All Terrain.
AS: All Season. The “M+S” or “M/S” indicates that the tire has some functional use in mud and snow.

U.S. DOT Tire Identification Number (TIN)

This begins with the letters “DOT” which indicates the tire meets all federal standards. The next two numbers or letters are the plant code where it was manufactured, and the last four numbers represent the week and year the tire was manufactured. For example, the numbers 457 means the 45st week of 1997. After 2000 the numbers go to four digits. For example, the number 2102 means the 21th week of 2002. The other numbers are marketing codes used at the manufacturer's discretion. This information is used to contact consumers if a tire defect requires a recall.

Tire Ply Composition and Materials Used

The number of plies indicates the number of layers of rubber-coated fabric in the tire. In general, the greater the number of plies, the more weight a tire can support. Tire manufacturers also must indicate the tire materials, which include steel, nylon, polyester, and other.

Maximum Load Rating

This number indicates the maximum load in kilograms and pounds that can be carried by the tire.

Maximum Permissible Inflation Pressure

This number is the greatest amount of air pressure that should ever be put in the tire under normal driving conditions.

Tread Wear, Traction and Temperature Grades

Tread wear: The tread wear grade is a comparative rating based on the wear rate of the tire when tested under controlled conditions on a specified government test course. For example, a tire graded 150 would wear one and one-half (1 1/2) times as well on the government course as a tire graded 100.

Tire Information (U.S.A.)

Traction: The traction grades, from highest to lowest are AA, A, B, and C. The grades represent the tire's ability to stop on wet pavement as measured under controlled conditions on specified government test surfaces of asphalt and concrete. A tire marked C may have poor traction performance.
Temperature: The temperature grades are A (the highest), B and C, representing the tire's resistance to the generation of heat and its ability to dissipate heat when tested under controlled conditions on a specified indoor laboratory test wheel.

Snow Tires

In some heavy snow areas, local governments may require true snow tires, those with very deeply cut tread. These tires should only be used in pairs or placed on all four wheels. Make sure you purchase snow tires that are the same size and construction type as the other tires on your vehicle.

SAFETY WARNING

The following safety warning appears on the tire's sidewall.
SERIOUS INJURY MAY RESULT FROM:

- EXPLOSION OF TIRE/RIM ASSEMBLY DUE TO IMPROPER MOUNTING-MATCH TIRE DIAMETER TO RIM DIAMETER; NEVER EXCEED 40 psi (275 kPa) TO SEAT BEADS-ONLY SPECIALLY TRAINED PERSONS SHOULD MOUNT TIRES.
- TIRE FAILURE DUE TO UNDER-INFLATION/OVERLOADING/ DAMAGE-FOLLOW OWNER'S MANUAL AND PLACARD IN VEHICLE-FREQUENTLY CHECK INFLATION PRESSURE AND INSPECT FOR DAMAGE.

▼ Information on Temporary Tires

Please refer to the sample below.

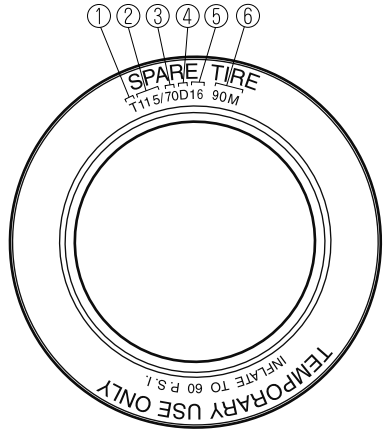

1. Temporary tires
2. Nominal width of tire in millimeters
3. Ratio of height to width (aspect ratio)
4. Diagonal
5. Rim diameter code
6. Load index & speed symbol

T115/70D16 90M is an example of a tire size and load index rating. Here is an explanation of the various components of that tire size and load index rating. Note that the tire size and load index rating may be different from the example.

T

Indicates a tire that may be installed on cars, SUVs, minivans and light trucks as designated by the Tire and Rim Association (T&RA).

115

“115” is the nominal width of the tire in millimeters. This three-digit number gives the width in millimeters of the tire from sidewall edge to sidewall edge. In general, the larger the number, the wider the tire.

70

“70” is the aspect ratio. This two-digit number indicates the tire's ratio of height to width.

D

“D” is the tire construction symbol. D indicates “diagonal ply construction”.

16

“16” is the wheel rim diameter in inches.

90

“90” is the Load Index. This two-or three-digit number indicates how much weight each tire can support.

M

“M” is the speed rating. The speed rating denotes the maximum speed for which the use of the tire is rated.

Letter Rating	Speed Rating
M	81 mph

Location of the Tire Label (Placard)

You will find the tire label containing tire inflation pressure by tire size and other important information on the driver's side B-pillar or on the edge of the driver's door frame.

SAMPLE

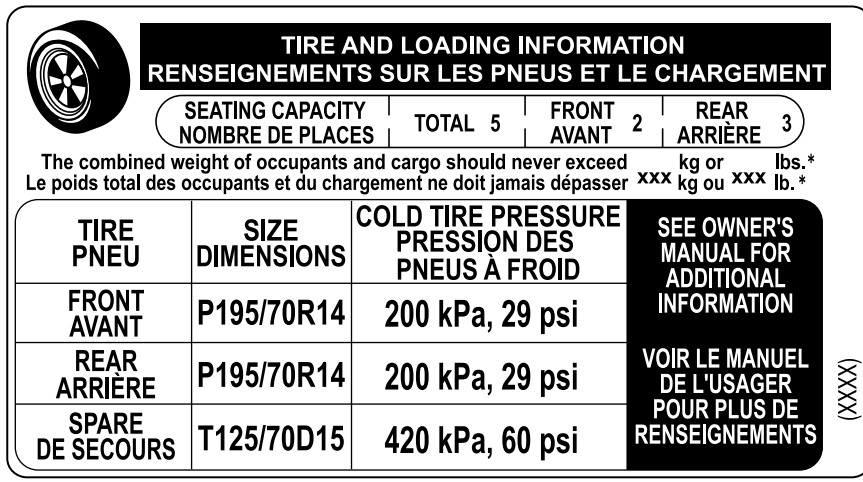

▼ Recommended Tire Inflation Pressure

On the tire label you will find the recommended tire inflation pressure in both kPa and psi for the tires installed as original equipment on the vehicle. It is very important that the inflation pressure of the tires on your vehicle is maintained at the recommended pressure. You should check the tire pressure regularly to insure that the proper inflation pressure is maintained.
Refer to Tires on page 9-7.

NOTE
Tire pressures listed on the vehicle placard or tire information label indicate the recommended cold tire inflation pressure, measured when the tires are cold, after the vehicle has been parked for at least 3 hours. As you drive, the temperature in the tire warms up, increasing the tire pressure.

WARNING

Always check the tire inflation pressures on a regular basis according to the recommended tire inflation pressure on the tire label and in conjunction with the information in this owner's manual:
Driving your vehicle with under-inflated tires is dangerous.
Under-inflation is the most common cause of failures in any kind of tire and may result in severe cracking, tread separation or "blowout", with unexpected loss of vehicle control and increased risk of injury. Under-inflation increases sidewall flexing and rolling resistance, resulting in heat buildup and internal damage to the tire. It results in unnecessary tire stress, irregular wear, loss of control and accidents. A tire can lose up to half of its air pressure and not appear to be flat!
It is impossible to determine whether or not tires are properly inflated just by looking at them.

▼ Checking Tire Pressure

1. When you check the air pressure, make sure the tires are cold —meaning they are not hot from driving even a mile.
2. Remove the cap from the valve on one tire.
3. Firmly press a tire gauge onto the valve.
4. Add air to achieve recommended air pressure.
5. If you overfill the tire, release air by pushing on the metal stem in the center of the valve. Then recheck the pressure with your tire gauge.
6. Replace the valve cap.
7. Repeat with each tire, including the spare.

   NOTE
   Some spare tires require higher inflation pressure.
8. Visually inspect the tires to make sure there are no nails or other objects embedded that could poke a hole in the tire and cause an air leak.
9. Check the sidewalls to make sure there are no gouges, cuts, bulges, cracks or other irregularities.

▼ Glossary of Terms

Tire Placard: A label indicating the OE tire sizes, recommended inflation pressure, and the maximum weight the vehicle can carry.
Tire Identification Number (TIN): A number on the sidewall of each tire providing information about the tire brand and manufacturing plant, tire size, and date of manufacture.
Inflation Pressure: A measure of the amount of air in a tire.
kPa: Kilopascal, the metric unit for air pressure.
psi: Pounds per square inch, the English unit for air pressure.
B-pillar: The structural member at the side of the vehicle behind the front door.

Tire Information (U.S.A.)

Original Equipment (OE): Describes components originally equipped on the vehicle.
Vehicle Load Limit: The maximum value of the combination weight of occupants and cargo.
Bead Area of the Tire: Area of the tire next to the rim.
Sidewall Area of the Tire: Area between the bead area and the tread.
Tread Area of the Tire: Area on the perimeter of the tire that contacts the road when it's mounted on the vehicle.

Seating capacity means the total allowable number of vehicle occupants. Seating capacity is described on the tire label.

Production options weight is the combination weight of installed regular production options weighing over 2.3 kilograms in excess of the standard items which they replace, and not previously considered in the curb weight or accessory weight, including heavy duty brakes, ride levelers, roof rack, heavy duty battery, and special trim.

Rim is the metal support (wheel) for a tire or a tire and tube assembly upon which the tire beads are seated.

Tire Maintenance

Improper or inadequate vehicle maintenance can cause tires to wear abnormally. Here are some important maintenance points:

▼ Tire Inflation Pressure

Inspect all tire pressure monthly (including the spare) when the tires are cold. Maintain recommended pressures for the best ride, top handling, and minimum tire wear. Use the pressures specified on the vehicle tire information placard or tire label for optimum service.

▼ Tire Rotation

To equalize tread wear, rotate the tires every 12,000 km (7,500 miles) at the latest or sooner if irregular wear develops. Mazda recommends to rotate every 8,000 km (5,000 miles) to help increase tire life and distribute wear more evenly.

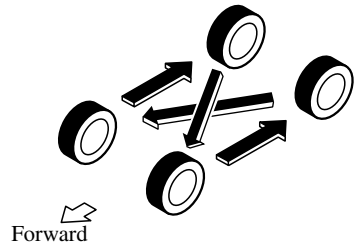

Do not include (TEMPORARY USE ONLY) spare tire in rotation.

Inspect the tires for uneven wear and damage. Abnormal wear is usually caused by one or a combination of the following:

- Incorrect tire pressure
- Improper wheel alignment
- Out-of-balance wheel
- Severe braking

After rotation, inflate all tire pressures to specification (page 9-7) and inspect the lug nuts for tightness.

⚠ CAUTION

Rotate unidirectional tires and radial tires that have an asymmetrical tread pattern or studs only from front to rear, not from side to side. Tire performance will be weakened if rotated from side to side.

▼ Replacing a Tire

⚠ WARNING

Always use tires that are in good condition:
Driving with worn tires is dangerous. Reduced braking, steering, and traction could result in an accident.

If a tire wears evenly, a wear indicator will appear as a solid band across the tread. Replace the tire when this happens.

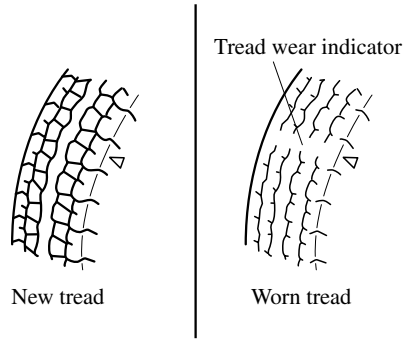

You should replace the tire before the band crosses the entire tread.

NOTE
Tires degrade over time, even when they are not being used on the road. It is recommended that tires generally be replaced when they are 6 years or older. Heat caused by hot climates or frequent high loading conditions can accelerate the aging process. You should replace the spare tire when you replace the other road tires due to the aging of the spare tire. The period in which the tire was manufactured (both week and year) is indicated by a 4-digit number.
Refer to Tire Labeling on page 8-25.

▼ Safety Practices

The way you drive has a great deal to do with your tire mileage and safety. So cultivate good driving habits for your own benefit.

- Observe posted speed limits and drive at speeds that are safe for the existing weather conditions
- Avoid fast starts, stops and turns
- Avoid potholes and objects on the road
- Do not run over curbs or hit the tire against the curb when parking

CAUTION

If you feel a sudden vibration or ride disturbance while driving or you suspect your tire or vehicle has been damaged, immediately reduce your speed. Drive with caution until you can safely pull off the road. Stop and inspect the tire for damage. If the tire is under-inflated or damaged, deflate it, remove the tire and rim and replace it with your spare tire. If you cannot detect a cause, have the vehicle towed to the nearest vehicle or tire dealer to have the vehicle inspected.

Vehicle Loading

WARNING

Do not tow a trailer with this vehicle:
Towing a trailer with this vehicle is dangerous because it has not been designed to tow a trailer and doing so will affect the drive system which could result in vehicle damage.

This section will guide you in the proper loading of your vehicle, to keep your loaded vehicle weight within its design rating capability. Properly loading your vehicle will provide maximum return of vehicle design performance. Before loading your vehicle, familiarize yourself with the following terms for determining your vehicle's weight ratings, from the vehicle's Safety Certification Label and Tire and Load Information Label:

WARNING

Overloaded Vehicle:
Overloading a vehicle is dangerous. The results of overloading can have serious consequences in terms of passenger safety. Too much weight on a vehicle's suspension system can cause spring or shock absorber failure, brake failure, handling or steering problems, irregular tire wear, tire failure or other damage.
Overloading makes a vehicle harder to drive and control. It also increases the distance required for stopping. In cases of serious overloading, brakes can fail completely, particularly on steep grades. The load a tire will carry safely is a combination of the size of the tire, its load range, and corresponding inflation pressure.
Never overload the vehicle and always observe the vehicle's weight ratings from the vehicle's Safety Certification and Tire and Load Information labels.

Base Curb Weight is the weight of the vehicle including a full tank of fuel and all standard equipment. It does not include passengers, cargo, or optional equipment.

Vehicle Curb Weight is the weight of your new vehicle when you picked it up from your dealer plus any aftermarket equipment.

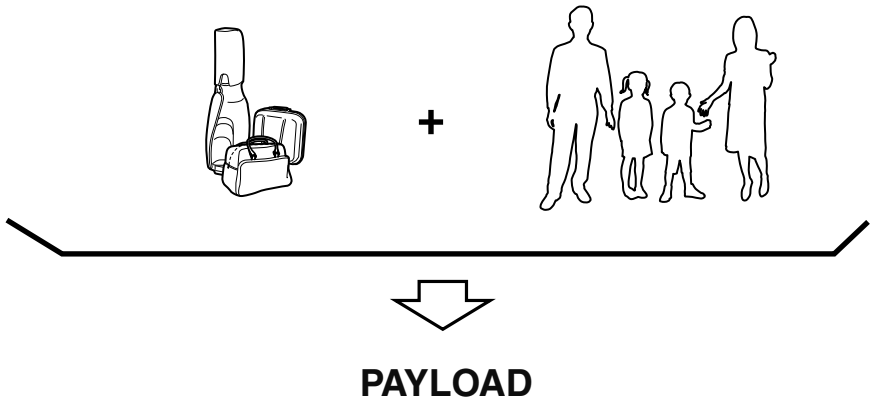

Tire Information (U.S.A.)

Payload is the combination weight of cargo and passengers that the vehicle is designed to carry. The maximum payload for your vehicle can be found on the Tire and Load Information label on the driver's door frame or door pillar. Look for “THE COMBINATION WEIGHT OF OCCUPANTS AND CARGO SHOULD NEVER EXCEED XXX kg or XXX lbs” for your maximum payload. The payload listed on the tire label is the maximum payload for the vehicle as built by the assembly plant. If any aftermarket or dealer installed equipment has been installed on the vehicle, the weight of the equipment must be subtracted from the payload listed on the tire label in order to be accurate.

SAMPLE

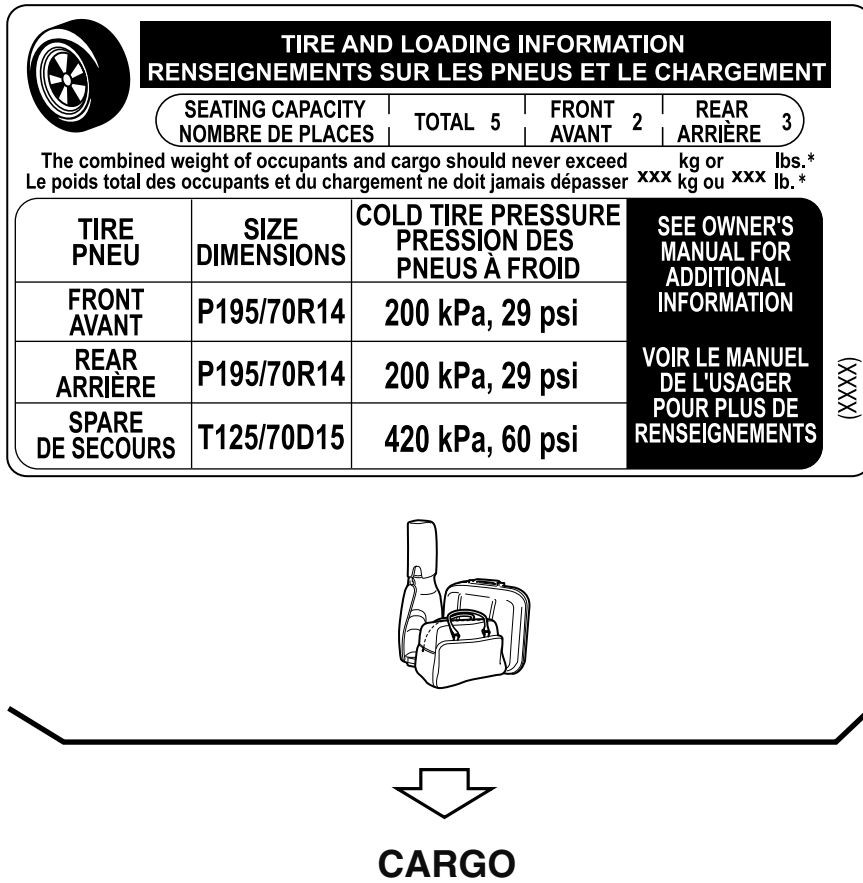

Cargo Weight includes all weight added to the Base Curb Weight, including cargo and optional equipment.

The cargo weight limit decreases depending on the number of vehicle occupants. The cargo weight limit can be calculated by subtracting the total weight of the vehicle occupants from the “combination weight of occupants and cargo should never exceed” value on the tire label.

Examples: Based on a single occupant weight of 68 kg (150 lbs), and a value of 385 kg (849 lbs) for the “combination weight of occupants and cargo should never exceed”:
The cargo weight limit with one occupant is 385 kg (849 lbs) － 68 kg (150 lbs) = 317 kg (699 lbs)
The cargo weight limit with two occupants is 385 kg (849 lbs) － (68 × 2) kg ((150 × 2) lbs) = 249 kg (549 lbs)
If the weight of the occupant increases, the cargo weight limit decreases by that much.

GAW (Gross Axle Weight) is the total weight placed on each axle (front and rear) - including vehicle curb weight and all payload.

GAWR (Gross Axle Weight Rating) is the maximum allowable weight that can be carried by a single axle (front or rear). **These numbers are shown on the Safety Compliance Certification Label located on the driver's door frame or door pillar. The total load on each axle must never exceed its GAWR.**

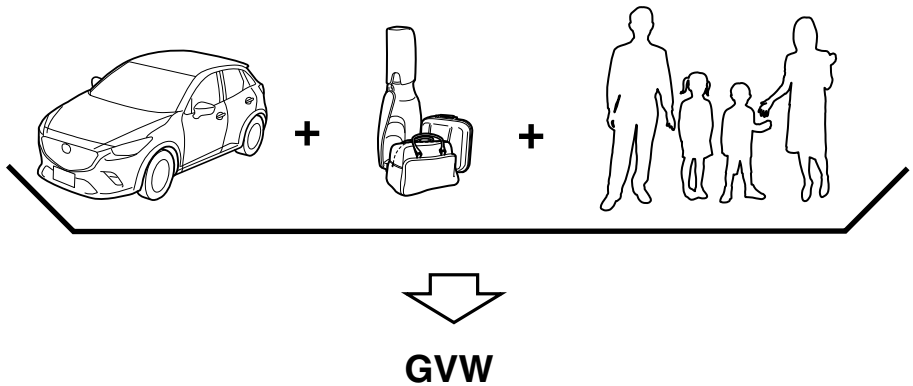

Tire Information (U.S.A.)

GVW (Gross Vehicle Weight) is the Vehicle Curb Weight + cargo + passengers.

GVWR (Gross Vehicle Weight Rating) is the maximum allowable weight of the fully loaded vehicle (including all options, equipment, passengers and cargo). **The GVWR is shown on the Safety Compliance Certification Label located on the driver's door frame or door pillar. The GVW must never exceed the GVWR.**

SAMPLE

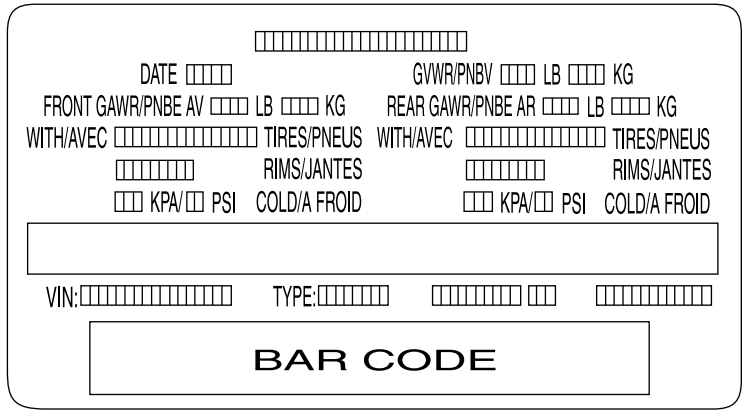

WARNING

Never Exceed Axle Weight Rating Limits:
Exceeding the Safety Certification Label axle weight rating limits is dangerous and could result in death or serious injury as a result of substandard vehicle handling, performance, engine, transmission and/or structural damage, serious damage to the vehicle, or loss of control.

Always keep the vehicle within the axle weight rating limits.

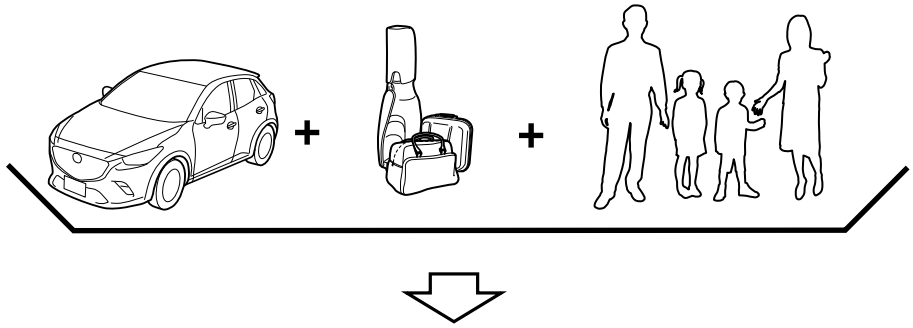

GCW (Gross Combination Weight) is the weight of the loaded vehicle (GVW).

GCWR (Gross Combination Weight Rating) is the maximum allowable weight of the vehicle - including all cargo and passengers - that the vehicle can handle without risking damage. **The GCW must never exceed the GCWR.**

WARNING

Never Exceed GVWR or GAWR Specifications:
Exceeding the GVWR or the GAWR specified on the certification label is dangerous. Exceeding any vehicle rating limitation could result in a serious accident, injury, or damage to the vehicle.
Do not use replacement tires with lower load carrying capacities than the originals because they may lower the vehicle's GVWR and GAWR limitations. Replacement tires with a higher limit than the originals do not increase the GVWR and GAWR limitations.
Never exceed the GVWR or the GAWR specified on the certification label.

Steps for Determining the Correct Load Limit

Steps for Determining Correct Load Limit-

(1) Locate the statement “The combined weight of occupants and cargo should never exceed XXX kg or XXX lbs.” on your vehicle's placard.
(2) Determine the combined weight of the driver and passengers that will be riding in your vehicle.
(3) Subtract the combined weight of the driver and passengers from XXX kg or XXX lbs.
(4) The resulting figure equals the available amount of cargo and luggage load capacity. For example, if the “XXX” amount equals 1400 lbs. and there will be five 150 lb passengers in your vehicle, the amount of available cargo and luggage load capacity is 650 lbs. (1400 － 750 (5 × 150) = 650 lbs.)
(5) Determine the combined weight of luggage and cargo being loaded on the vehicle. That weight may not safely exceed the available cargo and luggage load capacity calculated in Step 4.
(6) If your vehicle will be towing a trailer, load from your trailer will be transferred to your vehicle. Consult this manual to determine how this reduces the available cargo and luggage load capacity of your vehicle.

Declaration of Conformity

▼ Keyless Entry System/Immobilizer System

FCC CAUTION
Changes or modifications not expressly approved by the party responsible for compliance could void the user's authority to operate the equipment.

FCC/IC
This device complies with Part 15 of FCC Rules and Industry Canada's licence-exempt RSSs. Operation is subject to the following two conditions: (1) this device may not cause harmful interference, and (2) this device must accept any interference received, including interference that may cause undesired operation.
Le présent appareil est conforme à la partie 15 des règles de la FCC et aux normes des CNR d'Industrie Canada applicables aux appareils radio exempts de licence. L'exploitation est autorisée aux deux conditions suivantes : (1) l'appareil ne doit pas produire de brouillage, et (2) l'appareil doit accepter tout brouillage subi, même si le brouillage est susceptible d'en compromettre le fonctionnement.

(MEXICO)
La operación de este equipo está sujeta a las siguientes dos condiciones: (1) es posible que este equipo o dispositivo no cause interferencia perjudicial y (2) este equipo o dispositivo debe aceptar cualquier interferencia, incluyendo la que pueda causar su operación no deseada.

▼ Blind Spot Monitoring (BSM) System

(U.S.A.)

FCC ID : NBG012692A

This device complies with part 15 of the FCC Rules. Operation is subject to the following two conditions:

(1) This device may not cause harmful interference, and

(2) this device must accept any interference received, including interference that may cause undesired operation.

FCC Warning

Changes or modifications not expressly approved by the party responsible for compliance could void the user's authority to operate the equipment.

(Canada)

This Category II radiocommunication device complies with Industry Canada Standard RSS-310.

Ce dispositif de radiocommunication de catégorie II respecte la norme CNR-310 d'Industrie Canada .

This device complies with Industry Canada licence-exempt RSS standard(s).

Operation is subject to the following two conditions:

(1) this device may not cause interference, and (2) this device must accept any interference, including interference that may cause undesired operation of the device.

Le présent appareil est conforme aux CNR d'Industrie Canada applicables aux appareils radio exempts de licence. L'exploitation est autorisée aux deux conditions suivantes:

(1) l'appareil ne doit pas produire de brouillage, et (2) l'utilisateur de l'appareil doit accepter tout brouillage radioélectrique subi, même si le brouillage est susceptible d'en compromettre le fonctionnement.

Mexico

Sistema de apertura de puertas de automóviles,
base y llave electrónica
Hella KGaA Hueck & Co
LCA3.5
COFETEL: RCPHELC15-0521

▼ Tire Pressure Monitoring System

FCC

This device complies with Part 15 of the FCC Rules. Operation is subject to the following two conditions: (1) This device may not cause harmful interference, and (2) This device must accept any interference received, including interference that may cause undesired operation.

Changes or modifications not expressly approved by the party responsible for compliance could void the user's authority to operate the equipment.

IC (Canada)

This device complies with Industry Canada licence-exempt RSS standard(s).

Operation is subject to the following two conditions: (1) This device may not cause interference, and (2) This device must accept any interference, including interference that may cause undesired operation of the device.

Le présent appareil est conforme aux CNR d'Industrie Canada applicables aux appareils radio exempts de licence. L'exploitation est autorisée aux deux conditions suivantes : (1) l'appareil ne doit pas produire de brouillage, et (2) l'utilisateur de l'appareil doit accepter tout brouillage radioélectrique subi, même si le brouillage est susceptible d'en compromettre le fonctionnement.

Declaration of Conformity

▼ Bluetooth® Hands-Free

Type A

U.S.A. and Canada

Model: MAZ
Brand: Visteon
Manufacturer: Visteon Corporation
Address: One Village Center Dr., Van Buren Township,
MI 48111-5711
United States of America

FCC ID: NT8MBLUEC09 IC:3043A-MBLUEC09
This device complies with Part 15 of the FCC Rules and with RSS-210 of Industry Canada.
Operation is subject to the following two conditions:
(1) This device may not cause harmful interference, and
(2) This device must accept any interference received, including interference that may cause undesired operation.

⚠ WARNING

Changes or modifications not expressly approved by the party responsible for compliance could void the user's authority to operate the equipment.

The term “IC: ” before the radio certification number only signifies that Industry Canada technical specifications were met.
The antenna used for this transmitter must not be co-located or operating in conjunction with any other antenna or transmitter. End-users and installers must be provided with installation instructions and transmitter operating conditions for satisfying RF exposure compliance.

Mazda Bluetooth® Hands-Free Customer Service

- U.S.A.
  Phone: 800-430-0153 (Toll-free)
  Web: www.mazdausa.com/mazdaconnect
- Canada
  Phone: 800-430-0153 (Toll-free)
  Web: www.mazdahandsfree.ca

Mexico

"Para cumplimiento de la IFETEL:
La operación de este equipo está sujeta a las siguientes dos condiciones:
(1) es posible que este equipo o dispositivo no cause interferencia perjudicial y
(2) este equipo o dispositivo debe aceptar cualquier interferencia, incluyendo
la que pueda causar su operación no deseada"

- Brief description: Bluetooth module for Hands-free telephone and streaming audio
- Name and address of the importer: Refer to "MEXICO" (page 8-13) in Importer/Distributor section.
- Brand name of the product: Visteon Corporation.
- Model name of the product: MAZ
- Names and addresses of where the warranty can be served: Refer to "MEXICO" (page 8-13) in Importer/Distributor section.
- Names and addresses of where to acquire spare parts, consumables and accessories: Refer to "MEXICO" (page 8-13) in Importer/Distributor section.
- Warranty period, items covered by the warranty and its possible limitations or exceptions: Refer to the Warranty Booklet for detailed warranty information.
- Warranty procedure:
  Center of Attention to Client (CAC)
  Phone: 01-800-01-MAZDA
  Web: www.mazdamexico.com.mx
- Electrical specifications:
  Voltage: 9-16V, Frequency: 2.4Ghz, Current: 270mA(Typ)

Declaration of Conformity

Type B

U.S.A. and Canada

Type B

Model: MAZDA_GEN_65_CMU
Brand: Visteon
Manufacturer: Visteon Corporation
Address: One Village Center Dr., Van Buren Township,
MI 48111-5711
United States of America

FCC ID: NT862932 IC:3043A-62932

FCC/IC Regulatory Notice

Modification statement

Visteon Corporation has not approved any changes or modifications to this device by the user. Any changes or modifications could void the user's authority to operate the equipment.

Visteon Corporation n'approuve aucune modification apportée à l'appareil par l'utilisateur, quelle qu'en soit la nature. Tout changement ou modification peuvent annuler le droit d'utilisation de l'appareil par l'utilisateur.

Interference statement

This device complies with Part 15 of the FCC Rules and Industry Canada licence-exempt RSS standard(s). Operation is subject to the following two conditions: (1) this device may not cause interference, and (2) this device must accept any interference, including interference that may cause undesired operation of the device.

Le présent appareil est conforme aux CNR d'Industrie Canada applicables aux appareils radio exempts de licence. L'exploitation est autorisée aux deux conditions suivantes : (1) l'appareil ne doit pas produire de brouillage, et (2) l'utilisateur de l'appareil doit accepter tout brouillage radioélectrique subi, même si le brouillage est susceptible d'en compromettre le fonctionnement.

Radiation Exposure Statement

This device complies with FCC/IC radiation exposure limits set forth for an uncontrolled environment and meets the FCC radio frequency (RF) Exposure Guidelines in Supplement C to OET65 and RSS-102 of the IC radio frequency (RF) Exposure rules. The antenna should be installed and operated with minimum distance of 20 cm between the radiator and your body. This transmitter must not be co-located or operating in conjunction with any other antenna or transmitter.

Le présent appareil est conforme à l'exposition aux radiations FCC / IC définies pour un environnement non contrôlé et répond aux directives d'exposition de la fréquence de la FCC radiofréquence (RF) dans le Supplément C à OET65 et RSS-102 de la fréquence radio (RF) IC règles d'exposition. L'antenne doit être installé de façon à garder une distance minimale de 20 centimètres entre la source de rayonnements et votre corps. L'émetteur ne doit pas être colocalisé ni fonctionner conjointement avec à autre antenne ou autre émetteur.

Mexico

NOM
RCPJOMA13-1301

Declaration of Conformity

▼ Smart Brake Support (SBS)/Mazda Radar Cruise Control (MRCC)/Distance Recognition Support System (DRSS)

FCC ID: HYGDNMWR006

NOTE:
This device complies with part 15 of the FCC Rules. Operation is subject to the following two conditions:
(1) This device may not cause harmful interference, and
(2) this device must accept any interference received,including interference that may cause undesired operation.

FCC WARNING:
Changes or modifications not expressly approved by the party responsible for compliance could void the user's authority to operate the equipment.

Radiofrequency radiation exposure Information:
This equipment complies with FCC radiation exposure limits set forth for an uncontrolled environment.
This equipment should be installed and operated with minimum distance of 20 cm between the radiator (antenna) and your body.
This transmitter must not be co-located or operating in conjunction with any other antenna or transmitter.

NOTE:
This device complies with Industry Canada licence-exempt RSS standard(s). Operation is subject to the following two conditions:
(1) this device may not cause interference, and
(2) this device must accept any interference, including interference that may cause undesired operation of the device.

This equipment complies with IC radiation exposure limits set forth for an uncontrolled environment and meets RSS-102 of the IC radio
frequency (RF) Exposure rules. This equipment should be installed and operated keeping the radiator at least 20 cm or more away from person's body.

NOTE:
Le présent appareil est conforme aux CNR d'Industrie Canada applicables aux appareils radio exempts de licence.
L'exploitation est autorisée aux deux conditions suivantes:
(1) l'appareil ne doit pas produire de brouillage, et
(2) l'utilisateur de l'appareil doit accepter tout brouillage radioélectrique subi, même si le brouillage est susceptible d'en compromettre le fonctionnement.

Cet équipement est conforme aux limites d'exposition aux rayonnements énoncées pour un environnement non contrôlé et respecte les règles d'exposition aux fréquences radioélectriques (RF) CNR-102 de l'IC.
Cet équipement doit être installé et utilisé en gardant une distance de 20 cm ou plus entre le dispositif rayonnant et le corps.

9 Specifications

Technical information about your Mazda.

Identification Numbers.....9-2
Vehicle Information Labels..... 9-2

Specifications..... 9-4
Specifications..... 9-4

Personalization Features.....9-9
Personalization Features.....9-9

Vehicle Information Labels

▼ Vehicle Identification Number

The vehicle identification number legally identifies your vehicle. The number is on a plate attached to the cowl panel located on the left corner of the dashboard. This plate can easily be seen through the windshield.

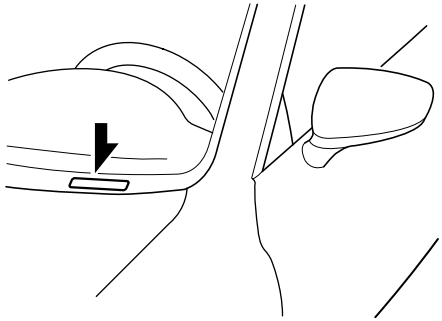

▼ Motor Vehicle Safety Standard Label (U.S.A. and Canada)

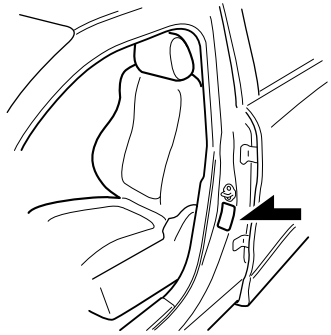

▼ Chassis Number

Open the cover shown in the figure to check the chassis number.

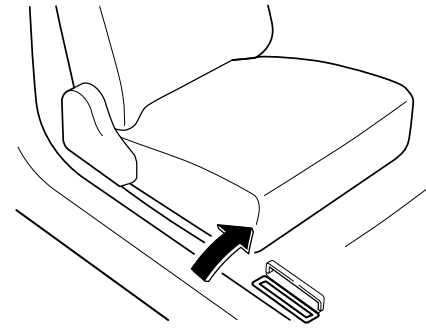

▼ Vehicle Emission Control Information Label (U.S.A. and Canada)

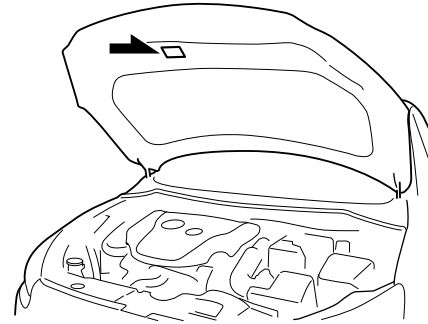

▼ Tire Pressure Label

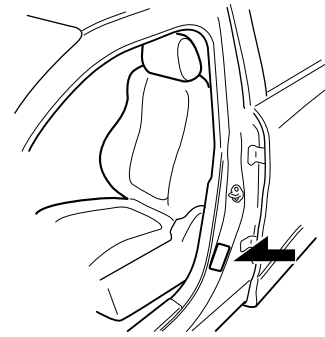

▼ Engine Number

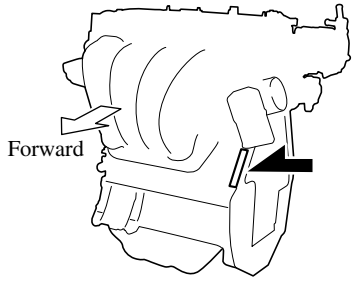

Specifications

▼ Engine

Item	Specification
Type	DOHC-16V in-line, 4-cylinder
Bore × Stroke	83.5 × 91.2 mm (3.29 × 3.59 in)
Displacement	1,997.6 ml (1,997.6 cc)
Compression ratio	13.0

▼ Electrical System

Item		Specification	
Battery	Canada	12V-65Ah/20HR	
	Except Canada	12V-60Ah/20HR or 12V-65Ah/20HR	
Spark-plug number		Mazda Genuine spark plug*1	PE5R-18-110 or PE5S-18-110

*1 The spark plugs provide the SKYACTIV-G its optimum performance. Consult an Authorized Mazda Dealer for details.

⚠ CAUTION

When cleaning the iridium plugs, do not use a wire brush. The fine particulate coating on the iridium alloy and platinum tips could be damaged.

▼ Lubricant Quality

Lubricant	Specification	
Engine oil	Refer to Recommended Oil on page 6-22.	
Coolant	FL-22 type	
Manual transaxle oil	API Service	GL-4
	SAE	75W-80
Automatic transaxle fluid	Mazda Genuine ATF-FZ	
Transfer case oil	Mazda Long Life Hypoid Gear Oil SG1	
Rear differential oil	Mazda Long Life Hypoid Gear Oil SG1	
Brake/Clutch fluid	SAE J1703 or FMVSS116 DOT-3	

NOTE
Refer to Introduction on (page 6-2) for owner's responsibility in protecting your investment.

▼ Capacities

(Approximate Quantities)

Item			Capacity
Engine oil	With oil filter replacement		4.2 L (4.4 US qt, 3.7 Imp qt)
	Without oil filter replacement		4.0 L (4.2 US qt, 3.5 Imp qt)
Coolant	Manual transaxle		5.6 L (5.9 US qt, 4.9 Imp qt)
	Automatic transaxle	U.S.A. and Canada	5.9 L (6.2 US qt, 5.2 Imp qt)
		Mexico	6.1 L (6.4 US qt, 5.4 Imp qt)
Manual transaxle fluid			1.70 L (1.80 US qt, 1.50 Imp qt)
Automatic transaxle fluid			7.8 L (8.2 US qt, 6.9 Imp qt)
Transfer case oil			0.40 L (0.42 US qt, 0.35 Imp qt)
Rear differential oil			0.35 L (0.37 US qt, 0.31 Imp qt)
Fuel tank	2WD		48.0 L (12.7 US gal, 10.6 Imp gal)
	AWD		45.0 L (11.9 US gal, 9.90 Imp gal)

Check oil and fluid levels with dipsticks or reservoir gauges.

▼ Dimensions

U.S.A. and Canada

Item	Vehicle specification
Overall length	4,275 mm (168.3 in)
Overall width	1,765 mm (69.5 in)
Overall height	1,550 mm (61.0 in)
Front tread	1,525 mm (60.0 in)
Rear tread	1,520 mm (59.8 in)
Wheelbase	2,570 mm (101.2 in)

Mexico

Item	Vehicle specification
Overall length	4,275 mm (168.3 in)
Overall width	1,765 mm (69.5 in)
Overall height	1,545 mm (60.8 in)
Front tread	1,525 mm (60.0 in)
Rear tread	1,520 mm (59.8 in)
Wheelbase	2,570 mm (101.2 in)

Specifications

▼ Weights

U.S.A. and Canada

Item		Weight		
		2WD		AWD
		Automatic transaxle	Manual transaxle	
GVWR (Gross Vehicle Weight Rating)		1,742 kg (3,840 lbs)	1,700 kg (3,748 lbs)	1,810 kg (3,990 lbs)
GAWR (Gross Axle Weight Rating)	Front	933 kg (2,057 lbs)	900 kg (1,984 lbs)	958 kg (2,112 lbs)
	Rear	812 kg (1,790 lbs)	808 kg (1,781 lbs)	860 kg (1,896 lbs)

Mexico

Item		Weight	
		With moonroof	Without moonroof
GVW (Gross Vehicle Weight)	Total	1,762 kg (3,885 lbs)	1,751 kg (3,860 lbs)
	Front	924 kg (2,037 lbs)	918 kg (2,024 lbs)
	Rear	838 kg (1,847 lbs)	833 kg (1,836 lbs)
GAW (Permissible axle load)	Front	939 kg (2,070 lbs)	933 kg (2,057 lbs)
	Rear	887 kg (1,955 lbs)	887 kg (1,955 lbs)

▼ Air Conditioner

The type of refrigerant used is indicated on a label attached to the inside of the engine compartment. Check the label before recharging the refrigerant. Refer to Climate Control System on page 5-4.

Item	Specification
Refrigerant Type	HFC134a (R-134a)

▼ Light Bulbs

Exterior light

Light bulb			Category	
			Wattage	UNECE*1 (SAE)
Headlights	Halogen headlights	High beam/Daytime running lights	60	HB3 (9005)
		Low beam	55	H11 (H11)
	LED headlights	High beam	LED*2	— (—)
		Low beam	LED*2	— (—)

Light bulb		Category	
		Wattage	UNECE*1 (SAE)
Parking lights/Front side-marker lights	With halogen headlights	5	W5W (—)
Parking lights/Daytime running lights	With LED headlights	LED*2	— (—)
Front side-marker lights	With LED headlights	LED*2	— (—)
Front turn signal lights		27	— (1156NA)
Fog lights*		LED*2	— (—)
Side turn signal lights*		LED*2	— (—)
High-mount brake light		LED*2	— (—)
Rear turn signal lights		21	WY21W (7443NA)
Rear side-marker lights	Bulb type	5	W5W (—)
	LED type	LED*2	— (—)
Brake lights/Taillights	Bulb type	21/5	W21/5W (7443)
	LED type	LED*2	— (—)
Reverse lights	Bulb type	16	W16W (921)
	LED type	LED*2	— (—)
Taillights*	LED type	LED*2	— (—)
License plate lights		5	W5W (—)

*1 UNECE stands for United Nations Economic Commission for Europe.
*2 LED is the abbreviation for Light Emitting Diode.

Interior light

Light bulb	Category	
	Wattage	UNECE*1
Overhead light (Front)/Map lights	8	—
Overhead light (Rear)	10	—
Luggage compartment light	5	—

*1 UNECE stands for United Nations Economic Commission for Europe.

▼ Tires

NOTE
The tires have been optimally matched with the chassis of your vehicle.
When replacing tires, Mazda recommends that you replace tires of the same type originally fitted to your vehicle. For details, contact an Authorized Mazda Dealer.

Check the tire pressure label for tire size and inflation pressure.
Refer to Tire Inflation Pressure on page 6-36.

Specifications

Standard tire

(U.S.A. and Canada)

Tire size	Inflation pressure	
	Front	Rear
P215/60R16 94H	250 kPa (36 psi)	240 kPa (35 psi)
P215/50R18 92V	250 kPa (36 psi)	240 kPa (35 psi)

(Mexico)

Tire size		Inflation pressure	
		Up to 3 persons	—Full load
215/60R16 95V	Front	230 kPa (2.3 bar, 33 psi)	260 kPa (2.6 bar, 38 psi)
	Rear	210 kPa (2.1 bar, 30 psi)	330 kPa (3.3 bar, 48 psi)
215/50R18 92V	Front	230 kPa (2.3 bar, 33 psi)	260 kPa (2.6 bar, 38 psi)
	Rear	210 kPa (2.1 bar, 30 psi)	330 kPa (3.3 bar, 48 psi)

1 person's weight: About 75 kg

Temporary spare tire

(U.S.A. and Canada)

Tire size	Inflation pressure
T125/90D16 98M	420 kPa (60 psi)

(Mexico)

Tire size	Inflation pressure
185/60R16 86M	300 kPa (3.0 bar, 44 psi)

Lug nut tightening torque

When installing a tire, tighten the lug nut to the following torque.
108—147 N·m (12—14 kgf·m, 80—108 ft·lbf)

▼ Fuses

Refer to Fuses on page 6-48.

Personalization Features

The following personalization features can be set or changed by an Authorized Mazda Dealer. Consult an Authorized Mazda Dealer for details.
Additionally, some of the personalization features can be changed by the customer depending on the feature.
Personalization features and settings which can be changed differ depending on the market and specification.

Settings Change Method

① **Settings can be changed by operating the center display screen.**
A: Refer to Settings on page 5-112.
B: Refer to Fuel Economy Monitor on page 4-71.
C: Refer to Active driving display on page 4-21.
② **Settings can be changed by operating the vehicle switches.**
D: Refer to Stopping The Smart City Brake Support (SCBS) System Operation on page 4-126.
E: Refer to Auto Lock/Unlock Function on page 3-16.
F: Refer to Transmitter on page 3-4.
G: Refer to Locking, Unlocking with Request Switch (With the advanced keyless function) on page 3-13.
③ **Settings can be changed by an Authorized Mazda Dealer.**

Item	Feature	Factory Setting	Available Settings	Settings Change Method		
				①	②	③
Safety						
Smart City Brake Support (SCBS) (page 4-123)	The system can be changed so that Smart City Brake Support (SCBS) does not operate.*1	On	On/Off	A	D	—
Advanced Smart City Brake Support (Advanced SCBS) (page 4-119) Smart Brake Support (SBS) (page 4-127)	The system can be changed so that Smart City Brake Support (Advanced SCBS)/Smart Brake Support (SBS) does not operate.*1	On	On/Off	A	—	×
	The distance at which the collision warning activates can be changed.	Med.	Near/Med./Far	A	—	×
	The volume of the collision warning can be changed.	High	High/Low/Off	A	—	×

Personalization Features

Item	Feature		Factory Setting	Available Settings	Settings Change Method		
					①	②	③
Lane Departure Warning System (LDWS) (page 4-84)	The warning timing in which the Lane Departure Warning System (LDWS) determines that the vehicle may be deviating from its lane can be changed.		At	At/Before	A	—	×
	The sensitivity of the warning for the Lane Departure Warning System (LDWS) can be changed.		Low	High/Low	A	—	×
	Warning beep sound*2		Beep	Beep/Rumbl.	A	—	×
	Warning beep volume	Rumbl.	Low	High/Mid/Low	A	—	×
		Beep	Low	High/Low	A	—	×
Blind Spot Monitoring (BSM) (page 4-90)	The system can be changed so that Blind Spot Monitoring (BSM) does not operate.*1		On	On/Off	A	—	×
	Warning beep volume*3		High	High/ Low/ Off	A	—	×
Traffic Sign Recognition System (TSR)*4 (page 4-96)	The Traffic Sign Recognition System (TSR) can be set to inoperable.*1		On	On/Off	A	—	×
	The warning pattern of the excessive speed warning can be changed.		Off	Off/ Visual/ Audio & Visual	A	—	×
	The activation timing for the excessive speed warning can be changed.		+ 0	+ 0/+ 5/+ 10	A	—	×
Distance Recognition Support System (DRSS) (page 4-102)	The system can be changed so that Distance Recognition Support System (DRSS) does not operate.*1		On	On/Off	A	—	×
	The distance at which the vehicle ahead and your vehicle indicated in the display flashes in white can be changed.		Near	Far/Med./Near	A	—	×

Item	Feature	Factory Setting	Available Settings	Settings Change Method		
				①	②	③
Vehicle						
Door locks (page 3-16)	Operation condition of auto lock/unlock function	Lock: When Driving Unlock: IGN Off	Lock: Out of Park Unlock: In Park/ Lock: Shifting Out of Park/ Lock: When Driving Unlock: In Park/ Lock: When Driving Unlock: IGN Off/ Lock: When Driving/ Off	A	E	×
Keyless entry system (page 3-3)	The method for unlocking the doors using the transmitter can be changed.	Driver's: Once, All Doors: Twice	All Doors: Once/ Driver's: Once, All Doors: Twice	A	F	×
	The time required for the doors to relock automatically after unlocking with the transmitter can be changed.	60 seconds	90 seconds/ 60 seconds/ 30 seconds	A	—	×
Advanced keyless entry system (page 3-9)	The method for unlocking the doors using the request switch/ transmitter can be changed.	Driver's: Once, All Doors: Twice	All Doors: Once/ Driver's: Once, All Doors: Twice	A	F, G	×
	The volume of the answer-back beep during advanced keyless entry system operation can be changed.	Medium	High/ Medium/ Low/ Off	A	G	×
	The function to automatically lock the doors when leaving the vehicle while carrying the key can be changed.	Off	On/Off	A	—	×
	The time required for the doors to relock automatically after unlocking with the request switch/transmitter can be changed.	60 seconds	90 seconds/ 60 seconds/ 30 seconds	A	—	×
Illuminated entry system (page 5-127)	Time until interior lights turn off after closing door	15 seconds	60 seconds/ 30 seconds/ 15 seconds/ 7.5 seconds	A	—	×
	Time until interior lights turn off automatically when any door is not closed completely	30 minutes	60 minutes/ 30 minutes/ 10 minutes	A	—	×

Personalization Features

Item	Feature	Factory Setting	Available Settings	Settings Change Method		
				①	②	③
Auto-wiper control (page 4-49)	Operational/non-operational	On	On/Off*5	A	—	×
Daytime running lights (page 4-47)	Operational/non-operational	On	On/Off	A	—	×
Auto headlight off*6 (page 4-43)	Time until headlights turn off	30 seconds	120 seconds/ 90 seconds/ 60 seconds/ 30 seconds/ Off*7	A	—	×
Auto-light control (page 4-43)	Timing by which lights turn on	Medium	High/ Med.High/ Medium/ Med.Low/ Low	A	—	×
High Beam Control System (HBC) (page 4-81)	Operational/non-operational*1	On	On/Off	A	—	×
Adaptive Front Lighting System (AFS) (page 4-80)	Operational/non-operational*1	On	On/Off	A	—	×
Lights-on reminder*8 (page 7-43)	Warning beep volume	High	High/Low/Off	A	—	×
Coming home light (page 4-46)	Time until headlights turn off	30 seconds	120 seconds/ 90 seconds/ 60 seconds/ 30 seconds/ Off	A	—	×
Leaving home light (page 4-47)	Operational/non-operational	On	On/Off	A	—	×
Turn indicator (page 4-48)	Beep volume	High	High/Low	A	—	×
Three-flash turn signal (page 4-49)	Operational/non-operational	On	On/Off	A	—	×
Rear window defogger (page 4-53)	The operation time for the rear window defogger can be changed.	15 minutes	15 minutes/ Continuous*9	—	—	×

Item	Feature	Factory Setting	Available Settings	Settings Change Method		
				①	②	③
System						
Language	Language indicated in display	US English	Depends on market*10	A	—	×
Temperature	Temperature unit indicated in display	°F	°F/°C	A	—	×
Distance	Distance unit indicated in display	mi/km	mi/km	A	—	×
Fuel Economy Monitor (page 4-71)						
Ending display	Display/non-display	Off	On/Off	B	—	×
Fuel economy resetting procedure	Linkage/non-linkage with fuel economy reset and trip meter reset	Off	On/Off	B	—	×
Active Driving Display (page 4-21)						
Display	Setting can be changed so that the Active Driving Display is not displayed.	On	On/Off	C	—	×
	The display height (up/down position) can be changed.	0	13 steps up/down from initial setting (total: 27 steps)	C	—	×
	The method for adjusting the display brightness (automatically/manually) can be changed.	Auto	Auto/Man.	C	—	×
	The standard brightness while automatic adjustment is selected can be changed using the brightness adjustment.	0	2 steps up/down from initial setting (total: 5 steps)	C	—	×
	The standard brightness while manual adjustment is selected can be changed using the brightness adjustment.	0	20 steps up/down from initial setting (total: 41 steps)	C	—	×
Navigation guidance	Display/non-display	On	On/Off	C	—	×

*1 Though these systems can be turned Off, doing so will defeat the purpose of the system and Mazda recommends that these systems remain On.
*2 For vehicles with an audio system other than the on-screen function type, the warning sound cannot be changed. The warning sound is only a beep.
*3 Only the volume of the warning beep during Blind Spot Monitoring (BSM) operation can be changed. The volume of the warning beep during Rear Cross Traffic Alert (RCTA) operation cannot be changed.
*4 This system functions only when the navigation system is functioning.
*5 If the auto-wiper control is set to Off, the wiper lever **AUTO** position is set to intermittent operation.

*6 If the setting is changed to Off, the following operation is performed according to the headlight switch position:

- At AUTO position: Headlights turn off immediately after the ignition is switched off.
- At any position other than AUTO: Headlights do not turn off after the ignition is switched off.

*7 When set to Off, the lights-on reminder is operable.

*8 The setting of the lights-on reminder can be changed with the time setting of auto headlight off function set to Off.
Refer to Lights-On Reminder on page 7-43.

*9 The operation may stop in 15 minutes due to the effect of the outside temperature even if the operation time of the rear window defogger has been changed to Continuous.

*10 Available only in display from the center display.

10 Index

A

Accessory Socket..... 5-128
Active Driving Display..... 4-21
Adaptive Front Lighting System (AFS)..... 4-80
Add-On Non-Genuine Parts and Accessories..... 8-19
Advanced Key
Advanced keyless entry system..... 3-9
Operational range..... 3-10
Advanced Smart City Brake Support (Advanced SCBS)..... 4-119
Collision warning..... 4-121
Smart City Brake Support (SCBS) Indicator Light (Red)..... 4-121
Stopping the Advanced Smart City Brake Support (Advanced SCBS) system operation..... 4-121
Air Bag Systems..... 2-45
Air Bag/Front Seat Belt Pretensioner System Warning Beep..... 7-43
Ambient Temperature Display..... 4-18
Antilock Brake System (ABS)..... 4-67
Audio Control Switch
Adjusting the Volume..... 5-16
Seek Switch..... 5-16
Audio Set [Type A (non-touchscreen)]
AUX..... 5-24
Bluetooth®..... 5-31
Clock..... 5-22
Error Indications..... 5-30
iPod mode..... 5-28
Power/Volume/Sound Controls... 5-20
Radio..... 5-23
Troubleshooting..... 5-60
USB..... 5-25
Voice Recognition..... 5-56
Audio Set [Type B (touchscreen)]
Applications..... 5-114
AUX..... 5-78
Bluetooth®..... 5-84
Radio..... 5-71
Satellite Radio..... 5-75
Settings..... 5-112
Troubleshooting..... 5-115
USB..... 5-79
Voice Recognition..... 5-110
Volume/Display/Sound Controls..... 5-69
Audio System
Antenna..... 5-19
Appendix..... 5-120
Audio Control Switch..... 5-16
Audio Set [Type A (non-touchscreen)]..... 5-20
Audio Set [Type B (touchscreen)]..... 5-64
AUX/USB mode..... 5-17
Before Using the Audio System..... 5-16
AUTOHOLD..... 4-61
AUTOHOLD Warning Beep..... 7-46
Automatic Transaxle
Active Adaptive Shift (AAS)..... 4-34
Automatic transaxle controls..... 4-32
Direct mode..... 4-41
Driving tips..... 4-42
Manual shift mode..... 4-35
Shift-lock system..... 4-33
Transaxle ranges..... 4-33

B

Battery..... 6-32
Maintenance..... 6-34
Replacement..... 6-34
Specifications..... 9-4
Battery runs out..... 7-18
Jump-Starting..... 7-18
Beep Sounds

Electric parking brake (EPB) warning..... 7-45
Blind Spot Monitoring (BSM)..... 4-90
Canceling operation of Blind Spot Monitoring (BSM).....4-95
Blind Spot Monitoring (BSM) Warning Beep.....7-46
Bluetooth® [Type A (non-touchscreen)]
Bluetooth® Audio..... 5-46
Bluetooth® Hands-Free.....5-48
Bluetooth® Preparation.....5-34
Bluetooth® [Type B (touchscreen)]
Bluetooth® Audio..... 5-90
Bluetooth® Hands-Free.....5-100
Bluetooth® Preparation.....5-87
Body Lubrication..... 6-28
Bottle Holder.....5-131
Brakes
Brakes assist..... 4-60
Electric Parking Brake (EPB).....4-57
Foot brake.....4-56
Pad wear indicator.....4-59
Parking brake.....4-57
Warning light.....4-59
Break-In Period.....3-43

C

Capacities..... 9-5
Carbon Monoxide..... 3-26
Cell Phones..... 8-20
Center Console.....5-132
Child Restraint
Categories of child-restraint systems.....2-28
Child-restraint precautions..... 2-23
Child-restraint system installation..... 2-28
Child-restraint system suitability for various seat positions table.....2-30
Installing child-restraint systems.....2-33
LATCH child-restraint systems... 2-41
Child Safety Locks for Rear Doors... 3-19
Climate Control System.....5-4
Fully Automatic Type.....5-12
Gas specifications.....9-6
Manual Type.....5-7
Operating Tips.....5-4
Vent Operation.....5-5
Collision warning.....7-47
Coming Home Light..... 4-46
Cruise Control..... 4-140
Cruise Control Switch..... 4-140
Cruise main indication (white).....4-141
Cruise set indication (white)/indicator light (green)..... 4-141
Cruise Control Set Vehicle Speed Display..... 4-18
Cup Holder.....5-129
Customer Assistance..... 8-2

D

Dashboard Illumination.....4-17
Daytime Running Lights.....4-47
Defogger
Mirror.....4-54
Rear window..... 4-53
Dimensions.....9-5
Distance Recognition Support System (DRSS)..... 4-102
Door Locks.....3-11
Drive selection..... 4-73
Driving In Flooded Area.....3-47
Driving on Uneven Road..... 3-49
Driving Tips
Automatic transaxle.....4-42
Break-in period.....3-43
Driving in flooded area..... 3-47

Driving on uneven road.....3-49
Floor mat..... 3-44
Hazardous driving..... 3-44
Overloading..... 3-48
Rocking the vehicle.....3-45
Saving fuel and protection of the environment..... 3-43
Winter driving..... 3-45
Dynamic Stability Control (DSC).....4-70
TCS/DSC Indicator Light.....4-70

E

Electric Parking Brake (EPB).....4-57
Electric Parking Brake (EPB) Warning Beep.....7-45
Emergency Starting
Push-Starting..... 7-21
Starting a Flooded Engine.....7-21
Emergency Towing
Tiedown Hooks..... 7-25
Towing Description..... 7-24
Emission Control System.....3-25
Ending Screen Display.....4-72
Engine
Coolant.....6-25
Engine Compartment
Overview..... 6-21
Exhaust gas.....3-26
Hood release.....6-19
Oil..... 6-22
Essential information..... 6-2
Event Data Recorder.....8-21
Excessive Speed Warning.....7-47
Exhaust Gas..... 3-26
Exterior Care.....6-54
Aluminum Wheel Maintenance...6-59
Bright-Metal Maintenance.....6-58
Maintaining the Finish..... 6-55
Plastic Part Maintenance..... 6-59

F

Flasher
Hazard warning..... 4-55
Headlights.....4-43
Flat Tire.....7-3
Mounting the Spare Tire..... 7-13
Removing a Flat Tire..... 7-9
Floor Mat..... 3-44
Fluid
Brake/Clutch.....6-27
Washer..... 6-27
Fluids
Classification..... 9-4
Fog Lights.....4-48
Foot Brake.....4-56
Forward Sensing Camera (FSC)..... 4-130
Front Seat.....2-5
Fuel
Filler lid and cap..... 3-27
Gauge.....4-16
Requirements.....3-24
Tank capacity.....9-5
Fuel Consumption Display..... 4-71
Fuel Economy Monitor.....4-71
Ending screen display..... 4-72
Fuel consumption display.....4-71
Fuses.....6-48
Panel description..... 6-50
Replacement..... 6-48

G

Gauges.....4-11
Glove Compartment.....5-132

H

Hazardous Driving.....3-44
Hazard Warning Flasher.....4-55
Headlights
Coming home light.....4-46

Control.....4-43
Flashing..... 4-46
High-low beam.....4-46
Leaving home light..... 4-47
Leveling.....4-47
Head Restraint.....2-12
High Beam Control System (HBC).....4-81
Hill Launch Assist (HLA)..... 4-65
Hood Release..... 6-19
Horn.....4-55

I

If a Warning Light Turns On or Flashes.....7-27
If the Active Driving Display does not operate..... 7-49
Ignition
Switch.....4-4
Ignition not switched off (STOP) warning beep.....7-44
Illuminated Entry System..... 5-127
Immobilizer System.....3-39
Indicator Lights.....4-26
Low engine coolant temperature.....4-29
Wrench.....4-29
Inspecting Brake/Clutch Fluid Level.....6-27
Inspecting Coolant Level.....6-25
Inspecting Engine Oil Level..... 6-25
Inspecting Washer Fluid Level..... 6-27
Instrument Cluster.....4-11
Interior Care.....6-60
Active driving display maintenance.....6-62
Cleaning the floor mats.....6-63
Cleaning the window interiors.....6-62
Instrument panel top maintenance.....6-62
Leather upholstery maintenance.....6-61
Panel maintenance.....6-62
Plastic part maintenance.....6-62
Seat belt maintenance.....6-60
Upholstery and synthetic leather maintenance.....6-61
Vinyl upholstery maintenance..... 6-61
Interior Lights..... 5-126
Luggage Compartment Light.....5-126
Map Lights..... 5-126
Overhead Lights..... 5-126
i-ACTIVSENSE.....4-77
Active Safety Technology..... 4-77
Adaptive Front Lighting System (AFS)..... 4-80
Advanced Smart City Brake Support (Advanced SCBS)..... 4-119
Blind Spot Monitoring (BSM).....4-90
Camera and sensors.....4-78
Distance Recognition Support System (DRSS).....4-102
Forward Sensing Camera (FSC)..... 4-130
High Beam Control System (HBC)..... 4-81
Lane Departure Warning System (LDWS)..... 4-84
Mazda Radar Cruise Control with Stop & Go function (MRCC with Stop & Go function).....4-107
Pre-Crash Safety Technology..... 4-78
Radar Sensors (Rear).....4-138
Radar sensor (front).....4-135
Rear Cross Traffic Alert (RCTA)..... 4-104
Smart Brake Support (SBS)..... 4-127
Smart City Brake Support (SCBS).....4-123
Traffic Sign Recognition System (TSR)..... 4-96

i-ACTIV AWD Operation.....4-75

J

Jack.....7-5
Jump-Starting..... 7-18

K

Keyless Entry System..... 3-3
Keys.....3-2
Key suspend function.....3-8
Transmitter.....3-4
Key left-in-luggage compartment warning beep (With the advanced keyless function)..... 7-45
Key left-in-vehicle warning beep (With the advanced keyless function)..... 7-45
Key removed from vehicle warning beep..... 7-44
Key Suspend Function..... 3-8

L

Label Information..... 9-2
Lane Departure Warning sound..... 7-46
Lane Departure Warning System (LDWS).....4-84
LDWS switch..... 4-87
Lane-Change Signals..... 4-49
Leaving Home Light.....4-47
Liftgate..... 3-20
Luggage compartment.....3-22
When Liftgate Cannot be Opened.....7-48
Lighting Control.....4-43
Lights-on reminder.....7-43
Light Bulbs
Replacement..... 6-41
Specifications.....9-6
Lubricant Quality..... 9-4
Luggage Compartment Light..... 5-126

M

Maintenance
Information..... 6-2
Scheduled.....6-4
Maintenance Monitor.....6-15
Manual Transaxle Operation.....4-30
Map Lights..... 5-126
Mazda Radar Cruise Control with Stop & Go function (MRCC with Stop & Go function)..... 4-107
Close proximity warning.....4-109
Cruise control function.....4-116
Display indication.....4-109
Setting the system.....4-110
Stop hold control..... 4-115
Mazda Radar Cruise Control with Stop & Go function (MRCC with Stop & Go function) System Warnings.....7-47
Message Indicated on Display..... 7-41
Meters and Gauges.....4-11
Mirrors
Outside mirrors.....3-31
Rearview mirror..... 3-32
Mirror Defogger.....4-54
Moonroof.....3-36

O

Odometer and Trip Meter..... 4-12
Outside Mirrors.....3-31
Outside Temperature Display.....4-18
Overhead Console..... 5-131
Overhead Lights.....5-126
Overheating..... 7-22
Overloading.....3-48
Owner Maintenance
Closing the Hood.....6-20
Engine Compartment Overview..... 6-21
Key battery replacement.....6-34

Opening the Hood..... 6-19
Owner Maintenance Precautions.....6-17

P

Parking Brake.....4-57
Personalization Features..... 9-9
Power Steering.....4-76
Power steering warning buzzer.....7-46
Power Windows..... 3-33

R

Radar Sensors (Rear)..... 4-138
Radar Sensor (Front).....4-135
Rearview Mirror.....3-32
Rear Coat Hooks.....5-134
Rear Cross Traffic Alert (RCTA).... 4-104
Rear Door Child Safety Locks.....3-19
Rear Seat..... 2-9
Rear View Monitor..... 4-148
Displayable range on the screen.....4-150
Picture quality adjustment.....4-155
Rear view monitor operation.....4-151
Rear view parking camera location..... 4-149
Switching to the rear view monitor display.....4-149
Variance between actual road conditions and displayed Image..... 4-153
Viewing the display.....4-151
Rear Window Defogger..... 4-53
Rear Window Washer..... 4-53
Rear Window Wiper..... 4-53
Recommended Oil.....6-22
Recording of Vehicle Data.....8-22
Recreational Towing..... 3-50
Registering Your Vehicle in A Foreign Country.....8-18
Replacement
Fuse.....6-48
Key battery..... 6-34
Light Bulbs.....6-41
Tires..... 6-38
Wheel.....6-40
Wiper..... 6-29
Request switch inoperable warning beep (With the advanced keyless function)..... 7-45
Rocking the Vehicle.....3-45

S

Safety Defects, Reporting..... 8-14
Saving Fuel and Protection of the Environment.....3-43
Scheduled Maintenance..... 6-4
Seats
Driving position memory..... 2-7
Front seat.....2-5
Head restraint..... 2-12
Rear seat..... 2-9
Seat warmer.....2-6
Seat Belt System
Automatic locking.....2-17
Emergency locking.....2-17
Extender.....2-21
Pregnant women.....2-17
Seat belt precautions..... 2-15
Seat belt warning beep.....7-43
Security System
Immobilizer system.....3-39
Theft-deterrent system.....3-41
Smart Brake Support (SBS).....4-127
Collision warning..... 4-129
Smart Brake Support (SBS) indicator light (red).....4-129
Stopping the Smart Brake Support (SBS) system operation.....4-129

Smart City Brake Support (SCBS)..... 4-123
Collision warning..... 4-125
Smart City Brake Support (SCBS) Indicator Light (Red).....4-125
Stopping the Smart City Brake Support (SCBS) System Operation..... 4-126
Spare Tire.....7-6
Specifications..... 9-4
Speedometer.....4-12
Speed Unit Selector..... 4-12
SRS Air Bags
Front passenger occupant classification system.....2-61
How the SRS air bags work..... 2-54
Limitations to SRS air bag..... 2-59
Monitoring.....2-65
SRS air bag deployment criteria.....2-58
Supplemental restraint system components.....2-52
Starting the Engine.....4-5
Steering Wheel.....3-29
Horn.....4-55
Storage Compartments.....5-131
Center console.....5-132
Glove compartment..... 5-132
Overhead console..... 5-131
Rear coat hooks.....5-134
Sunshade.....3-38
Sunvisors..... 5-126

T

Tachometer.....4-16
Theft-Deterrent System.....3-41
Tiedown
Hook..... 7-25
Tires.....6-36
Flat Tire..... 7-3
Replacing a Tire..... 6-38
Replacing a Wheel..... 6-40
Snow tires.....3-46
Specifications.....9-7
Temporary Spare Tire.....6-39
Tire chains..... 3-46
Tire Inflation Pressure.....6-36
Tire Rotation.....6-37
Uniform tire quality grading system (UTQGS)..... 8-23
Tire inflation pressure warning beep..... 7-46
Tire Information.....8-25
Tire Pressure Monitoring System....4-144
Towing
Recreational towing.....3-50
Trailer Towing.....3-50
Towing Description.....7-24
Traction Control System (TCS)..... 4-68
TCS OFF Indicator Light.....4-69
TCS OFF Switch.....4-69
TCS/DSC Indicator Light.....4-68
Traffic Sign Recognition System (TSR).....4-96
Transmitter..... 3-4
Trip Computer.....4-14
Trip Meter..... 4-12
Trouble
Battery runs out.....7-18
Emergency Starting..... 7-21
Emergency Towing.....7-24
Flat Tire..... 7-3
Overheating..... 7-22
Parking in an Emergency..... 7-2
When Liftgate Cannot be Opened.....7-48
Turn Signals..... 4-48

V

Vanity Mirrors.....5-126

Vehicle Information Labels.....9-2

W

Warning Lights.....4-24
Warning Sound is Activated..... 7-43
Air bag/front seat belt pretensioner system warning beep..... 7-43
AUTOHOLD Warning Beep..... 7-46
Blind Spot Monitoring (BSM) warning beep..... 7-46
Collision warning..... 7-47
Electric Parking Brake (EPB) Warning Beep..... 7-45
Excessive speed warning.....7-47
Ignition not switched off (STOP) warning beep..... 7-44
Key left-in-luggage compartment warning beep (With the advanced keyless function).....7-45
Key left-in-vehicle warning beep (With the advanced keyless function).....7-45
Key removed from vehicle warning beep.....7-44
Lane Departure Warning sound... 7-46
Lights-on reminder..... 7-43
Mazda Radar Cruise Control with Stop & Go function (MRCC with Stop & Go function) system warnings.....7-47
Power steering warning buzzer....7-46
Request switch inoperable warning beep (With the advanced keyless function).....7-45
Seat belt warning beep..... 7-43
Tire inflation pressure warning beep.....7-46
Warranty..... 8-16
Weights.....9-6
Windows
Power windows..... 3-33
Windshield Washer..... 4-52
Windshield Wipers.....4-50
Winter Driving..... 3-45
Wiper
Replacing Rear Window Wiper Blade.....6-30
Replacing Windshield Wiper Blades..... 6-29